SONY

DIGITAL CASSETTE VTR

DVR-2000
DVR-2100

4:2:2

Component Digital

MAINTENANCE MANUAL

Volume 2 2nd Edition (Revised 5)

DVR-2000

Serial No. 10001 and Higher (JAPAN)
Serial No. 10001 and Higher (USA CANADA)
Serial No. 10001 and Higher (EK)

DVR-2100

Serial No. 10001 and Higher (JAPAN)
Serial No. 10001 and Higher (USA CANADA)
Serial No. 10001 and Higher (EK)

このマニュアルに記載されている事柄の著作権は当社にあり，説明内容は機器購入者の使用を目的としています。
従って，当社の許可なしに無断で複写したり，説明内容(操作，保守等)と異なる目的で本マニュアルを使用することを禁止します。

The material contained in this manual consists of information that is the property of Sony Corporation and is intended solely for use by the purchasers of the equipment described in this manual.
Sony Corporation expressly prohibits the duplication of any portion of this manual or the use thereof for any purpose other than the operation or maintenance of the equipment described in this manual without the express written permission of Sony Corporation.

Le matériel contenu dans ce manuel consiste en informations qui sont la propriété de Sony Corporation et sont destinées exclusivement à l'usage des acquéreurs de l'équipement décrit dans ce manuel.
Sony Corporation interdit formellement la copie de quelque partie que ce soit de ce manuel ou son emploi pour tout autre but que des opérations ou entretiens de l'équipement à moins d'une permission écrite de Sony Corporation.

Das in dieser Anleitung enthaltene Material besteht aus Informationen, die Eigentum der Sony Corporation sind, und ausschließlich zum Gebrauch durch den Käufer der in dieser Anleitung beschriebenen Ausrüstung bestimmt sind.
Die Sony Corporation untersagt ausdrücklich die Vervielfältigung jeglicher Teile dieser Anleitung oder den Gebrauch derselben für irgendeinen anderen Zweck als die Bedienung oder Wartung der in dieser Anleitung beschriebenen Ausrüstung ohne ausdrückliche schriftliche Erlaubnis der Sony Corporation.

SAFETY CHECK-OUT

After correcting the original service problem, perform the following safety checks before releasing the set to the customer :

Check the metal trim, "metallized" knobs, screws, and all other exposed metal parts for AC leakage. Check leakage as described below.

LEAKAGE TEST

The AC leakage from any exposed metal part to earth ground and from all exposed metal parts to any exposed metal part having a return to chassis, must not exceed 3.5 mA. Leakage current can be measured by any one of three methods.

1. A commercial leakage tester, such as the Simpson 229 or RCA WT-540A. Follow the manufacturers' instructions to use these instruments.
2. A battery-operated AC milliammeter. The Data Precision 245 digital multimeter is suitable for this job.
3. Measuring the voltage drop across a resistor by means of a VOM or battery-operated AC voltmeter. The "limit" indication is 5.25 V, so analog meters must have an accurate low-voltage scale. The Simpson 250 and Sanwa SH-63Trd are examples of a passive VOM that is suitable. Nearly all battery operated digital multimeters that have a 20 V AC range are suitable. (See Fig. A)

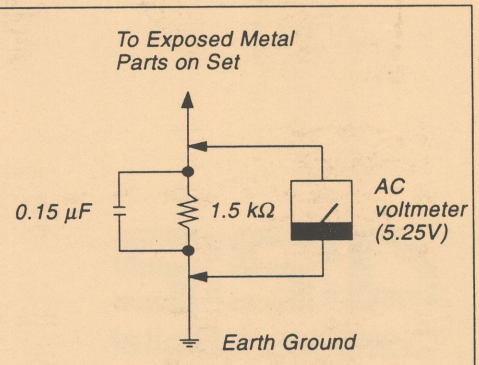

Fig A. Using an AC voltmeter to check AC leakage.

⚠警告

このマニュアルは，サービス専用です。
お客様が，このマニュアルに記載された設置や保守，点検，修理など行うと感電や火災，人身事故につながることがあります。
危険をさけるため，サービストレーニングを受けた技術者のみご使用ください。

⚠ WARNING

This manual is intended for qualified service personnel only.
To reduce the risk of electric shock, fire or injury, do not perform any servicing other than that contained in the operating instructions unless you are qualified to do so. Refer all servicing to qualified service personnel.

⚠ WARNUNG

Die Anleitung ist nur für qualifiziertes Fachpersonal bestimmt.
Alle Wartungsarbeiten dürfen nur von qualifiziertem Fachpersonal ausgeführt werden. Um die Gefahr eines elektrischen Schlages, Feuergefahr und Verletzungen zu vermeiden, sind bei Wartungsarbeiten strikt die Angaben in der Anleitung zu befolgen. Andere als die angegeben Wartungsarbeiten dürfen nur von Personen ausgeführt werden, die eine spezielle Befähigung dazu besitzen.

⚠ AVERTISSEMENT

Ce manual est destiné uniquement aux personnes compétentes en charge de l'entretien. Afin de réduire les risques de décharge électrique, d'incendie ou de blessure n'effectuer que les réparations indiquées dans le mode d'emploi à moins d'être qualifié pour en effectuer d'autres. Pour toute réparation faire appel à une personne compétente uniquement.

Attention-when the product is installed in Rack:

1. **Prevention against overloading of branch circuit**
   When this product is installed in a rack and is supplied power from an outlet on the rack, please make sure that the rack does not overload the supply circuit.

2. **Providing protective earth**
   When this product is installed in a rack and is supplied power from an outlet on the rack, please confirm that the outlet is provided with a suitable protective earth connection.

3. **Internal air ambient temperature of the rack**
   When this product is installed in a rack, please make sure that the internal air ambient temperature of the rack is within the specified limit of this product.

4. **Prevention against achieving hazardous condition due to uneven mechanical loading**
   When this product is installed in a rack, please make sure that the rack does not achieve hazardous condition due to uneven mechanical loading.

RECYCLING NICKEL-CADMIUM BATTERIES

NICKEL-CADMIUM BATTERY.
MUST BE DISPOSED OF PROPERLY.

Ni-Cd

Nickel-Cadmium batteries are recyclable. You can help preserve our environment by returning your unwanted batteries to your nearest Sony Service Center or Factory Service Center for collection, recycling or proper disposal.
Note: In some areas the disposal of nickel-cadmium batteries in household or business trash may be prohibited.

⚠ 警告

このマニュアルは、サービス専用です。
感電、このマニュアルに記載された設置や保守、点検、修理以外のことを実行すると感電や火災、人身事故につながることがあります。
危険をさけるため、サービストレーニングを受けた技術者のみご使用ください。

⚠ WARNING

This manual is intended for qualified service personnel only.
To reduce the risk of electric shock, fire or injury, do not perform any servicing other than that contained in the operating instructions unless you are qualified to do so. Refer all servicing to qualified service personnel.

⚠ WARNUNG

Die Anleitung ist nur für qualifiziertes Fachpersonal bestimmt.
Alle Wartungsarbeiten dürfen nur von qualifiziertem Fachpersonal ausgeführt werden. Um die Gefahr eines elektrischen Schlages, Feuergefahr und Verletzungen zu vermeiden, sind bei Wartungsarbeiten stets die Angaben in der Anleitung zu befolgen. Andere als die angegebenen Wartungsarbeiten dürfen nur von Personen ausgeführt werden, die eine spezielle Befähigung dazu besitzen.

⚠ AVERTISSEMENT

Ce manuel est destiné uniquement aux personnes compétentes en charge de l'entretien. Afin de réduire les risques de décharge électrique, d'incendie ou de blessure n'effectuer que les réparations indiquées dans le mode d'emploi à moins d'être qualifié pour en effectuer d'autres.
Pour toute réparation faire appel à une personne compétente uniquement.

Attention-when the product is installed in Rack:

1. **Prevention against overloading of branch circuit**
   When this product is installed in a rack and is supplied power from an outlet on the rack, please make sure that the rack does not overload the supply circuit.

2. **Providing protective earth**
   When this product is installed in a rack and is supplied power from an outlet on the rack, please confirm that the outlet is provided with a suitable protective earth connection.

3. **Internal air ambient temperature of the rack**
   When this product is installed in a rack, please make sure that the internal air ambient temperature of the rack is within the specified limit of this product.

4. **Prevention against achieving hazardous condition due to uneven mechanical loading**
   When this product is installed in a rack, please make sure that the rack does not achieve hazardous condition due to uneven mechanical loading.

RECYCLING NICKEL-CADMIUM BATTERIES

NICKEL-CADMIUM BATTERY.
MUST BE DISPOSED OF PROPERLY.

Nickel-Cadmium batteries are recyclable. You can help preserve our environment by returning your unwanted batteries to your nearest Sony Service Center or Factory Service Center for collection, recycling or proper disposal.
Note: In some areas the disposal of nickel-cadmium batteries in household or business trash may be prohibited.

Ni-Cd

目　次
TABLE OF CONTENTS

Volume 1 (J)

1. 設置
2. サービスインフォメーション
3. テストメニュー／サービスメニュー
4. 治工具および測定器
5. 定期点検日程
6. 点検および保守
7. 主要部品の交換
8. テープ走行系調整
9. 調整のための一般情報
10. 電源部調整
11. サーボ系調整
12. 長手信号系調整
13. RF信号／DT系調整
14. 信号処理系調整
15. ファンクションコントロールパネル調整
16. 自己診断
17. 回路説明

Volume 1 (UC, EK)

1. INSTALLATION
2. SERVICE INFORMATION
3. TEST MENU/SERVICE MENU
4. MAINTENANCE TOOL AND EQUIPMENT
5. PERIODIC CHECK
6. PERIODIC CHECK AND MAINTENANCE
7. REPLACEMENT OF MAJOR PART
8. TAPE PATH SYSTEM ALIGNMENT
9. GENERAL INFORMATION FOR ALIGNMENT
10. POWER SUPPLY ALIGNMENT
11. SERVO SYSTEM ALIGNMENT
12. LONGITUDINA SIGNAL SYSTEM ALIGNMENT
13. RF SIGNAL/DT SYSTEM ALIGNMENT
14. SIGNAL PROCESS SYSTEM ALIGNMENT
15. FUNCTION CONTROL PANEL ALIGNMENT
16. SELF DIAGNOSTIC
17. THEORY OF OPERATION

18. BLOCK DIAGRAM

Index ····· 18-1
Block Construction ····· 18-2
Overall (1/2) ····· 18-3
Overall (2/2) ····· 18-5
HEAD DRUM ····· 18-7
RF-23; RF REC/PB PB Processor ····· 18-9
REC-09; REC Signal Processor ····· 18-10
DEC-56; PB Signal Processor ····· 18-11
VN-03 (1/2); PB Signal Processor ····· 18-12
VN-03 (2/2) ····· 18-13
AU-133; Audio Signal Processor ····· 18-14
AE-12; Longitudinal Processor ····· 18-15
MOA-05; Audio/Monitor Amp ····· 18-16
MD-71; Motor Driver ····· 18-17
SV-120 (1/2); Servo/System Control ····· 18-18
SV-120 (2/2) ····· 18-19
IF-276; System Control I/O ····· 18-20
FUNCTION CONTROL PANEL ····· 18-21
POWER SUPPLY ····· 18-22
DT-26; Dynamic Tracking Control ····· 18-23

19. SCHEMATIC DIAGRAM

Index ····· 19-1
Board List ····· 19-2
Part Location ····· 19-3
RF-23 (1/3); RF REC/PB Processor ····· 19-17
RF-23 (2/3) ····· 19-19
RF-23 (3/3) ····· 19-21
REC-09 (1/8); REC Signal Processor ····· 19-23
REC-09 (2/8) ····· 19-25
REC-09 (3/8) ····· 19-27
REC-09 (4/8) ····· 19-29
REC-09 (5/8) ····· 19-31
REC-09 (6/8) ····· 19-33
REC-09 (7/8) ····· 19-35
REC-09 (8/8) ····· 19-37
DEC-56 (1/10); PB Signal Processor ····· 19-39
DEC-56 (2/10) ····· 19-41
DEC-56 (3/10) ····· 19-43
DEC-56 (4/10) ····· 19-45
DEC-56 (5/10) ····· 19-47
DEC-56 (6/10) ····· 19-49
DEC-56 (7/10) ····· 19-51
DEC-56 (8/10) ····· 19-53
DEC-56 (9/10) ····· 19-55
DEC-56 (10/10) ····· 19-57
VN-03 (1/10); PB Signal Processor ····· 19-59
VN-03 (2/10) ····· 19-61
VN-03 (3/10) ····· 19-63
VN-03 (4/10) ····· 19-65
VN-03 (5/10); PB Signal Processor ····· 19-67
VN-03 (6/10) ····· 19-69
VN-03 (7/10) ····· 19-71
VN-03 (8/10) ····· 19-73
VN-03 (9/10) ····· 19-75
VN-03 (10/10) ····· 19-77
AU-133 (1/6); Audio Signal Processor ····· 19-79
AU-133 (2/6) ····· 19-81
AU-133 (3/6) ····· 19-83
AU-133 (4/6) ····· 19-85
AU-133 (5/6) ····· 19-87
AU-133 (6/6) ····· 19-89
AE-12 (1/2); Longitudinal Processor ····· 19-91
AE-12 (2/2) ····· 19-93
MOA-05 (1/5); Audio/Monitor Amp ····· 19-95
MOA-05 (2/5) ····· 19-97
MOA-05 (3/5) ····· 19-99
MOA-05 (4/5) ····· 19-101
MOA-05 (5/5) ····· 19-103
PA-142; CUE/TC/CTL Head Amp ····· 19-105
SV-120 (1/6); Servo/System Control ····· 19-107
SV-120 (2/6) ····· 19-109
SV-120 (3/6) ····· 19-111
SV-120 (4/6) ····· 19-113
SV-120 (5/6) ····· 19-115
SV-120 (6/6) ····· 19-117
TR-83
SE-144 (1/2); Sensor-1 ····· 19-119
SE-144 (2/2) ····· 19-121
CN-508; SE-144 Board Relaying ····· 19-123
MD-71 (1/3); Motor Driver ····· 19-125
MD-71 (2/3) ····· 19-127
MD-71 (3/3) ····· 19-129
MY-46; NOV-RAM/Timer ····· 19-130
VIO-15; Digital Video I/O ····· 19-131
VIO-16; Reference Video I/O ····· 19-132
IF-276; System Control I/O ····· 19-133
ASW-22; Digital Audio I/O Selector ····· 19-134
PD-49; Power Rotary Transformer Driver ····· 19-135
POWER SUPLY ····· 19-137
CT-133; Regulator Controller
FU-53; Fuse Board
PS-256; Power Supply
RE-52; Switching Regulator
MB-285 (1/3); TTP Mother ····· 19-138
MB-285 (2/3) ····· 19-139
MB-285 (3/3) ····· 19-141
MB-286 (1/5); Processor Mother ····· 19-143
MB-286 (2/5) ····· 19-144
MB-286 (3/5) ····· 19-145
MB-286 (4/5) ····· 19-146
MB-286 (5/5) ····· 19-147
FRAME WIRING (1/6) ····· 19-149
MOTHER BOARD

FRAME WIRING (2/6) ·····19-150
AH-24; Longitudinal R/P Head
AH-33; Full Erase Head
CN-501; Drum CTL Relaying
FRAME WIRING (3/6) ·····19-151
CN-401; Reel Position Sensor Relaying
CN-481; Reel Motor Relaying
CN-501; Drum CTL Relaying
MT-47; Motor Relaying (Reel Shift/Threading)
PC-42; Sensor, T, S-Spring STR/USER Hole
FRAME WIRING (4/6) ·····19-152
CN-401; Reel Position Sensor Relaying
CN-581; S-Tension Sensor Relaying
DE-34; S-Tension Sensor (DME)
DE-38; T-Tension Sensor (DME)
LE-62; Sensor, Tape Thick/HC/REC Inhibit
LE-77; LED Indicator (Front Panel)
PC-42; Sensor, T, S-Spring STR/USER Hole
PC-50; Inner Motor/Cassette Sensor Relaying
PC-51; Inner Motor/Cassette Sensor Relaying
PC-52; Inner Motor/Cassette Sensor Relaying
PC-54; Sensor, Inner Up/Outer Down
PC-55; Sensor, Cassette Compartment
PC-60; Sensor, Tape Center
PC-64; Sensor, Tape Top/End
TR-43; Sensor, Tape Thick/HC/REC Inhibit
FRAME WIRING (5/6) ·····19-153
ASW-21; Digital Audio I/O Connector
FRAME WIRING (6/6) ·····19-154
CN-512; 50P I/O, RS-232C, RS-422
FP-33; Control Panel Cable Connector
MA-39; CUE/TC/MONITOR I/O Connector
MA-50; CUE/TC/MONITOR I/O Connector
PE-18; Power LED
VR-106; Headphones Monitor Amp
VR-107; Headphones Jack
FUNCTION CONTROL PANEL (1/3) ·····19-155
CP-156; Control Panel CPU
FUNCTION CONTROL PANEL (2/3) ·····19–156
SW-423; Rubber Key
SW-448; TTP Function Key
FUNCTION CONTROL PANEL (3/3) ·····19-157
DET-11; Rotary Encoder
LE-78; LED Indicator (Function Control Panel)
PS-219; Control Panel Power Supply
SW-448; TTP Function Key
DT-26 (1/3); Dynamic Tracking Control·····19-158
DT-26 (2/3) ·····19-159
DT-26 (3/3) ·····19-161
DD-11; DT Driver ·····19-163

20. BOARD LAYOUT

Index ····· 20-1
HEAD DRUM ····· 20-3
- DR-142; Drive Amp For Strain Gauge
- DR-172; RT Stator Assy
- PRT
- LED
- P.R.T. TRANSLATION

RF-23; RF REC/PB Processor ····· 20-5
REC-09; REC Signal Processor ····· 20-6
DEC-56; PB Signal Processor ····· 20-8
VN-03; PB Signal Processor ····· 20-10
AU-133; Audio Signal Processor ····· 20-12
AE-12; Longitudinal Processor ····· 20-14
- DUS-481

MOA-05; Audio/Monitor Amp ····· 20-16
SV-120; Servo/System Control ····· 20-18
SE-144; Sensor-1 ····· 20-20
CN-508; SE-144 Board Relaying ····· 20-21
MD-71; Motor Driver ····· 20-22
MY-46; NOV-RAM/Timer ····· 20-24
VIO-15; Digital Video I/O ····· 20-24
VIO-16; Reference Video I/O ····· 20-25
IF-276; System Control I/O ····· 20-26
ASW-22; Digital Audio I/O Selector ····· 20-27
PD-49; Power Rotary Transformer Driver ····· 20-28
POWER SUPPLY ····· 20-29
- FU-53; Fuse Board
- CT-133; Regulator Controller
- RE-52; Switching Regulator

POWER SUPPLY ····· 20-30
- PS-256; Power Supply

MB-285; TTP Mother ····· 20-32
MB-286; Processor Mother ····· 20-34
FRAME WIRING ····· 20-36
- ASW-21; Digital Audio I/O Connector
- AH-24; Longitudinal R/P Head
- AH-33; Full Erase Head

FRAME WIRING ····· 20-37
- CN-401; Reel Position Sensor Relaying
- CN-481; Reel Motor Relaying
- CN-501; Drum CTL Relaying
- CN-512; 50P I/O, RS-232C, RS-422
- CN-581; S-Tension Sensor Relaying
- DE-34; S-Tension Sensor (DME)
- DE-38; T-Tension Sensor (DME)
- FP-33; Control Panel Cable Connector

FRAME WIRING ····· 20-38
- LE-62; Sensor, Tape Thick/HC/REC Inhibit
- LE-77; LED Indicator (Front Panel)
- MA-39; CUE/TC/MONITOR I/O Connector
- MA-50; CUE/TC/MONITOR I/O Connector
- MT-47; Motor Relaying (Reel Shift/Threading)
- PC-42; Sensor T S-Spring STR/USER Hole
- PA-142; CUE/TC/CTL Head Amp
- PC-50; Inner Motor/Cassette Sensor Relaying
- PC-51; Inner Motor/Cassette Sensor Relaying

FRAME WIRING ····· 20-39
- PC-52; Inner Motor/Cassette Sensor Relaying
- PC-53; Sensor, Cassette In/M Size
- PC-54; Sensor, Inner Up/Outer Down
- PC-55; Sensor, Cassette Compartment
- PC-60; Sersor, Tape Center
- PC-64; Sensor, Tape Top/End
- PE-18; Power LED
- TR-43; Sensor, Tape Thick/HC/REC Inhibit
- VR-106; Headphones Monitor Amp
- VR-107; Headphones Jack

FUNCTION CONTROL PANEL ····· 20-40
- DET-11; Rotary Encoder
- PS-219; Control Panel Power Supply
- LE-78; LED Indicator (Function Control Panel)

FUNCTION CONTROL PANEL ····· 20-41
- SW-423; Rubber Key

FUNCTION CONTROL PANEL ····· 20-42
- SW-448; TTP Function Key

FUNCTION CONTROL PANEL ····· 20-43
- CP-156; Control Panel CPU

DT-26; Dynamic Tracking Control ····· 20-44
DD-11; DT Driver ····· 20-46

21. SEMICONDUCTOR PIN ASSIGNMENT

22. REPLACEABLE PART

22-1. Note on Repair Parts ····· 22-1
22-2. Exploded View ····· 22-2
Location of Mecanical Main Parts and Components ····· 22-2
Main Block ····· 22-4
Function Control Panel ····· 22-6
Card Rack Block ····· 22-8
Front Block ····· 22-10
Rear Panel Block ····· 22-12
Power Supply Block ····· 22-14
Cassette Compartment Block (1) ····· 22-16
Cassette Compartment Block (2) ····· 22-18
Cassette Sensor Block ····· 22-20
S Reel Table Block ····· 22-22
T Reel Table Block ····· 22-24
Reel Table Driving Block ····· 22-26
Drum Block ····· 22-28
S/T Slider Block ····· 22-30
S/T Loading Gear Block ····· 22-32
S/T Drawing Arms and Driving Gear Block ····· 22-34
S Plate/S Slant Base Block ····· 22-36
Loading Mortor and M Gear Box Block ····· 22-38
Au Head/Pinch Roller Press/T Plate Block ····· 22-40
22-3. Electrical Parts List ····· 22-42
Nonpolar Capacitor ····· 22-42
Electrolytic Capacitor ····· 22-42
Resistor ····· 22-42
AE-12 Board ····· 22-44
AH-24 Board ····· 22-52
AH-33 Board ····· 22-52
ASW-21 Board ····· 22-53
ASW-22 Board ····· 22-53
AU-133 Board ····· 22-55
CN-401 Board ····· 22-59
CN-481 Board ····· 22-60
CN-501 Board ····· 22-60
CN-508 Board ····· 22-60
CN-512 Board ····· 22-61
CN-581 Board ····· 22-61
CP-156 Board ····· 22-62
CT-133 Board ····· 22-63
DD-11 Board ····· 22-64
DE-34 Board ····· 22-65
DE-38 Board ····· 22-65
DEC-56 Board ····· 22-65
DET-11 Board ····· 22-67
DT-26 Board ····· 22-68
DUS-481 Board ····· 22-70
EX-244 Board ····· 22-71
EX-245 Board ····· 22-71
EX-288 Board ····· 22-71
FP-33 Board ····· 22-71
FU-53 Board ····· 22-71
IF-276 Board ····· 22-72
LE-62 Board ····· 22-73
LE-77 Board ····· 22-73
LE-78 Board ····· 22-74
MA-39 Board ····· 22-74
MA-50 Board ····· 22-74
MB-285 Board ····· 22-75
MB-286 Board ····· 22-75
MD-71 Board ····· 22-76
MOA-05 Board ····· 22-81
MT-47 Board ····· 22-94
MY-46 Board ····· 22-95
PA-142 Board ····· 22-96
PC-42 Board ····· 22-96
PC-50 Board ····· 22-97
PC-51 Board ····· 22-97
PC-52 Board ····· 22-97
PC-53 Board ····· 22-97
PC-54 Board ····· 22-97
PC-55 Board ····· 22-97
PC-60 Board ····· 22-97
PC-64 Board ····· 22-97
PD-49 Board ····· 22-98
PE-18 Board ····· 22-98
PS-219 Board ····· 22-99
PS-256 Board ····· 22-100
RE-52 Board ····· 22-103
REC-09 Board ····· 22-105
RF-23 Board ····· 22-108
SE-144 Board ····· 22-113
SV-120 Board ····· 22-115
SW-423 Board ····· 22-120
SW-448 Board ····· 22-121
TR-43 Board ····· 22-122
VIO-15 Board ····· 22-123
VIO-16 Board ····· 22-124
VN-03 Board ····· 22-125
VR-106 Board ····· 22-128
VR-107 Board ····· 22-128

Frame (DVR-2000/2100) ····· 22-128
Frame (BKDV-2010) ····· 22-134
Packing Materials & Supplied Accessories ····· 22-134

Optional Fixtures ····· 22-135

23. CHANGED PART

SECTION 18
BLOCK DIAGRAM

	Board Name	Function	Page
A	AE-12 Board :	Longitudinal Processor	18-15
	AU-133 Board :	Audio Signal Processor	18-14
C	CP-156 Board :	Control Panel CPU	18-21
D	DEC-56 Board :	PB Signal Processor	18-11
	DT-26 Board :	Dynamic Tracking Control (DVR-2100 ONLY)	18-23
I	IF-276 Board :	System Control I/O	18-20
M	MD-71 Board :	Motor Driver	18-17
	MOA-05 Board :	Audio/Monitor Amp	18-16
P	PS-219 Board :	Control Panel Power Supply	18-21
	PS-256 Board :	Power Supply	18-22
R	REC-09 Board :	REC Signal Processor	18-10
	RF-23 Board :	RF REC/PB Processor	18-9
S	SV-120 Board :	Servo/System Control	18-18
	SW-448 Board :	TTP Function Key	18-21
V	VN-03 Board :	PB Signal Processor	18-12

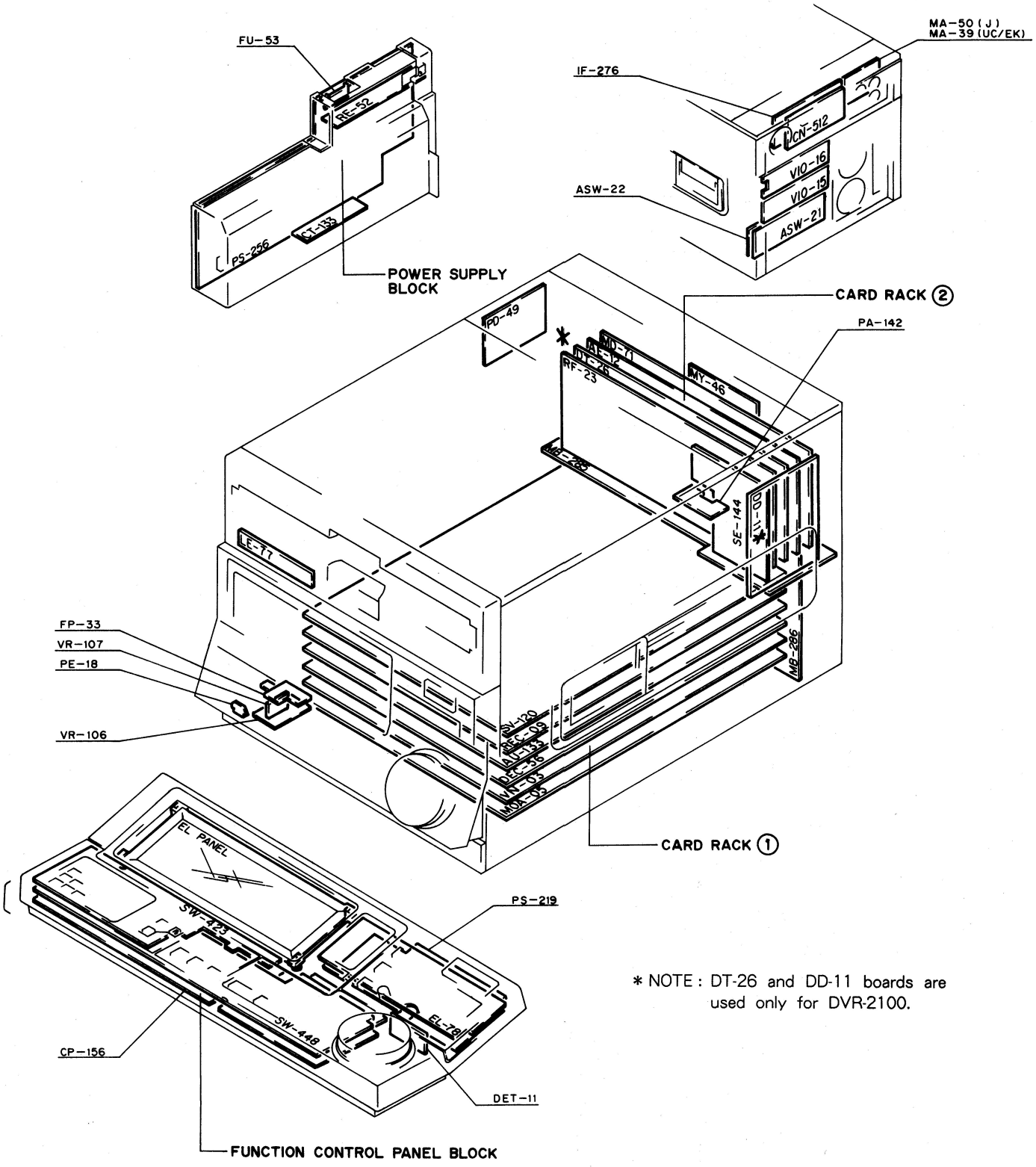

* NOTE : DT-26 and DD-11 boards are used only for DVR-2100.

BLOCK DIAGRAM OVERALL (1/2) OVERALL (1/2) BLOCK DIAGRAM

OVERALL (1/2) BLOCK DIAGRAM

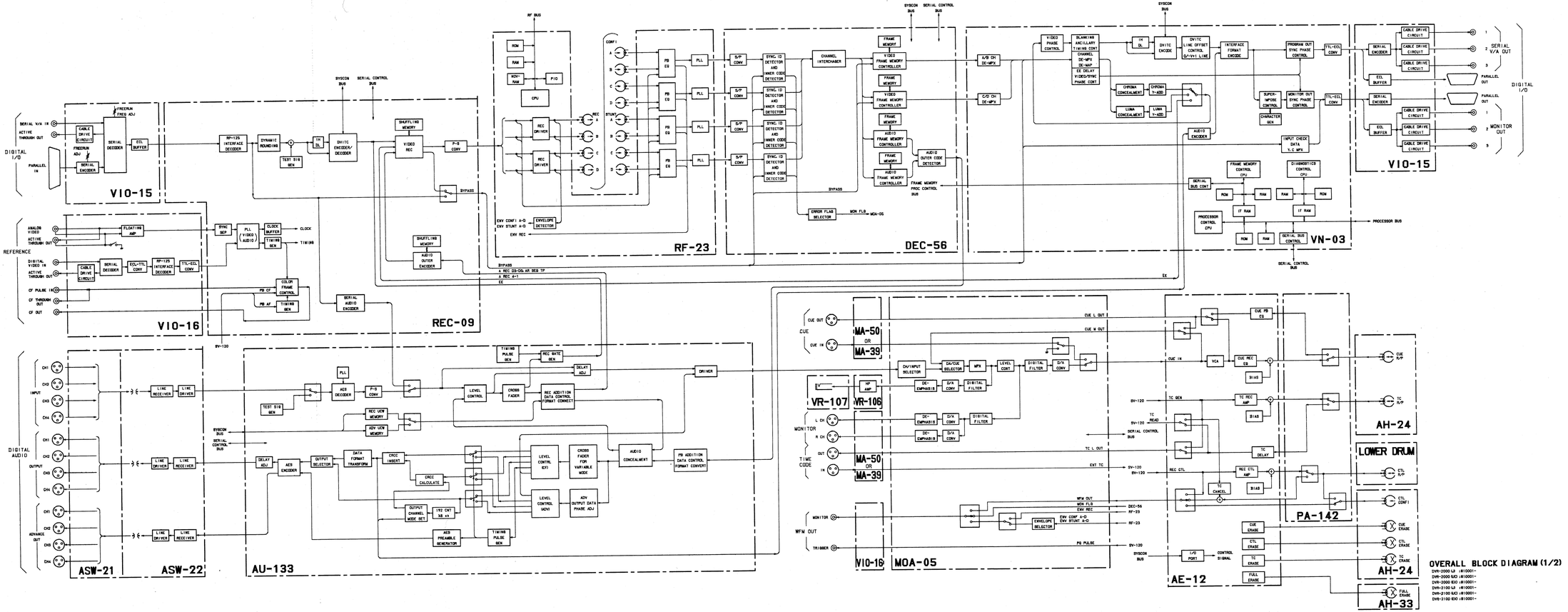

OVERALL (2/2) BLOCK DIAGRAM

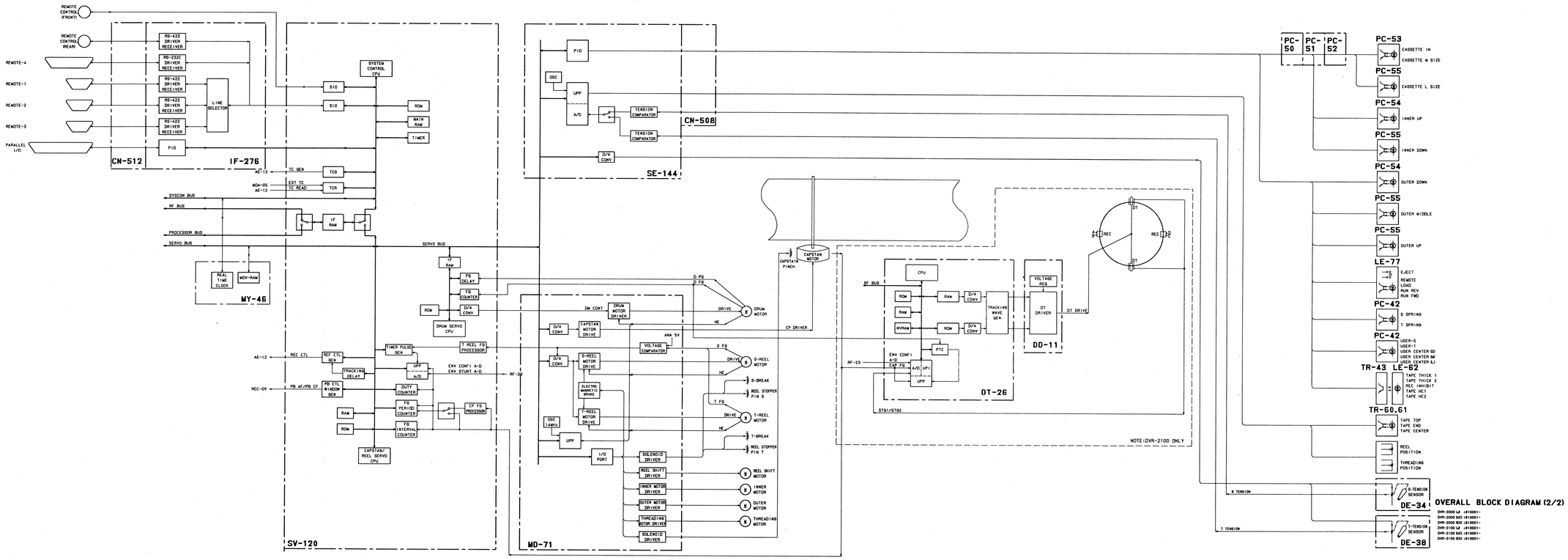

BLOCK DIAGRAM OVERALL (2/2) OVERALL (2/2) BLOCK DIAGRAM

HEAD DRUM BLOCK DIAGRAM

FOR DVR-2100

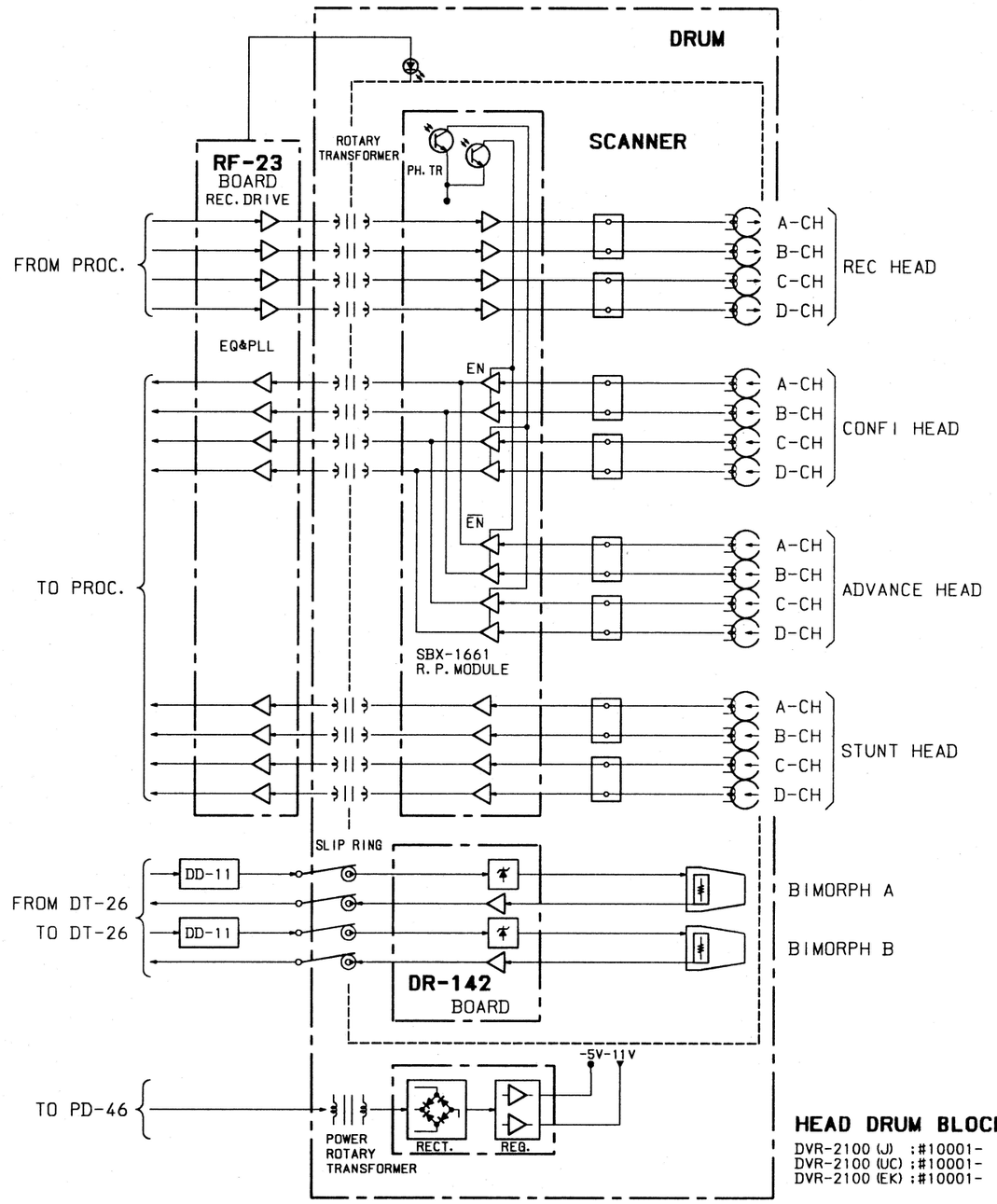

HEAD DRUM BLOCK DIAGRAM

DVR-2100 (J) :#10001-
DVR-2100 (UC) :#10001-
DVR-2100 (EK) :#10001-

FOR DVR-2000

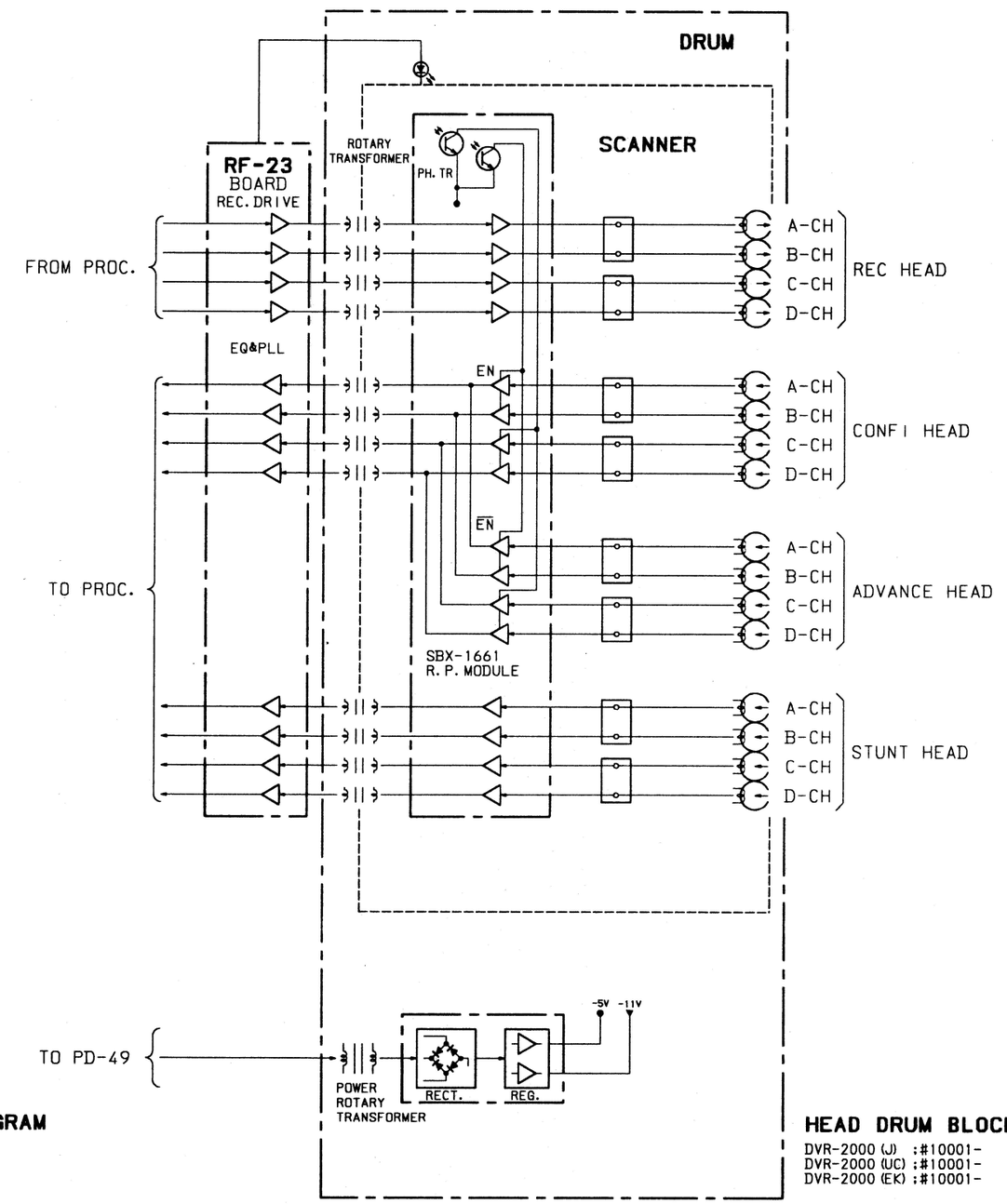

HEAD DRUM BLOCK DIAGRAM

DVR-2000 (J) :#10001-
DVR-2000 (UC) :#10001-
DVR-2000 (EK) :#10001-

RF-23 BLOCK DIAGRAM

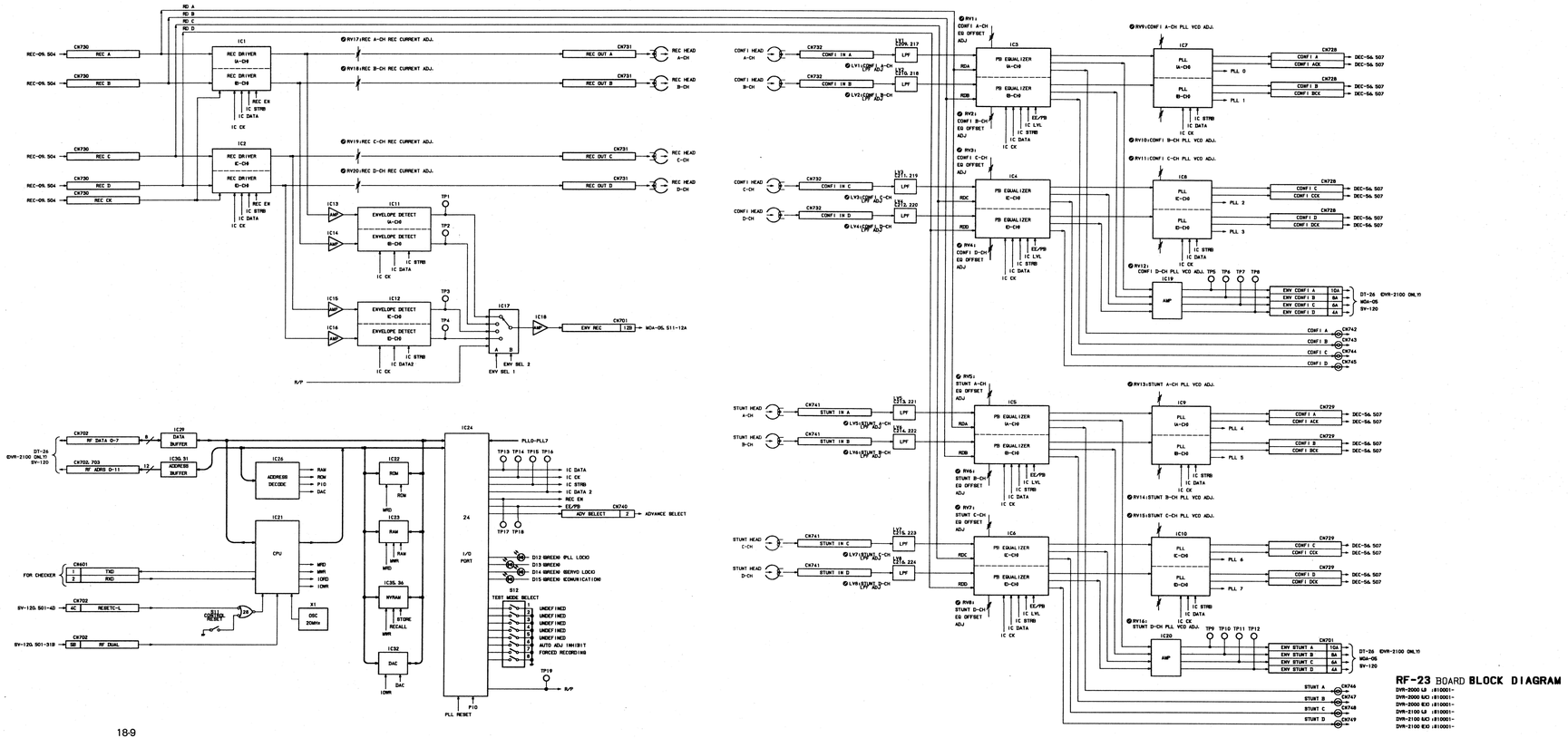

BLOCK DIAGRAM RF-23 RF-23 BLOCK DIAGRAM

18-9

DEC-56 BLOCK DIAGRAM

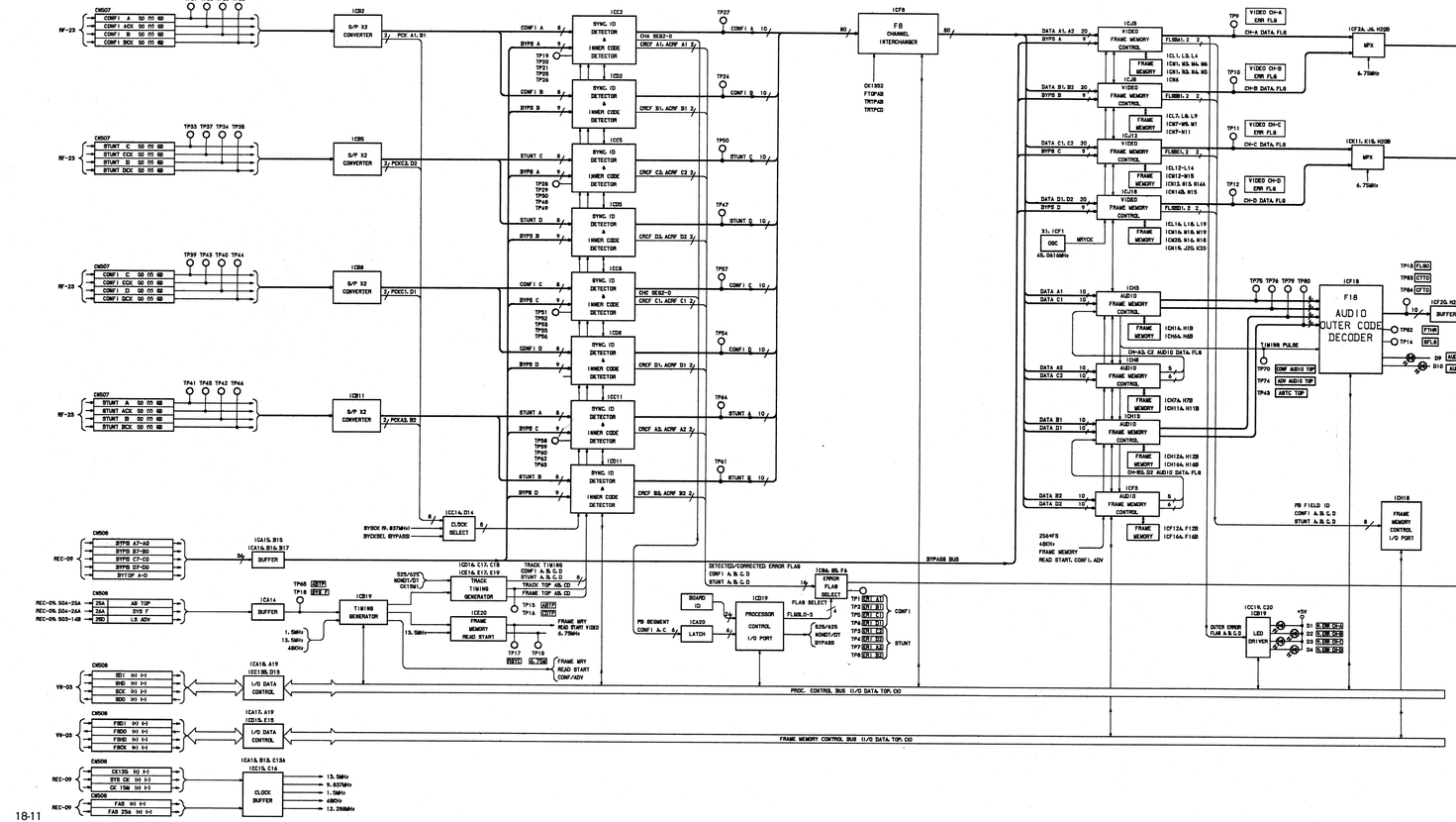

BLOCK DIAGRAM DEC-56 DEC-56 BLOCK DIAGRAM

DEC-56 BOARD BLOCK DIAGRAM

DVR-2000 LB :810001-
DVR-2000 KC1 :810001-
DVR-2000 KC2 :810001-
DVR-2100 LB :810001-
DVR-2100 KC1 :810001-
DVR-2100 KC2 :810001-

18-11

VN-03 (1/2) BLOCK DIAGRAM

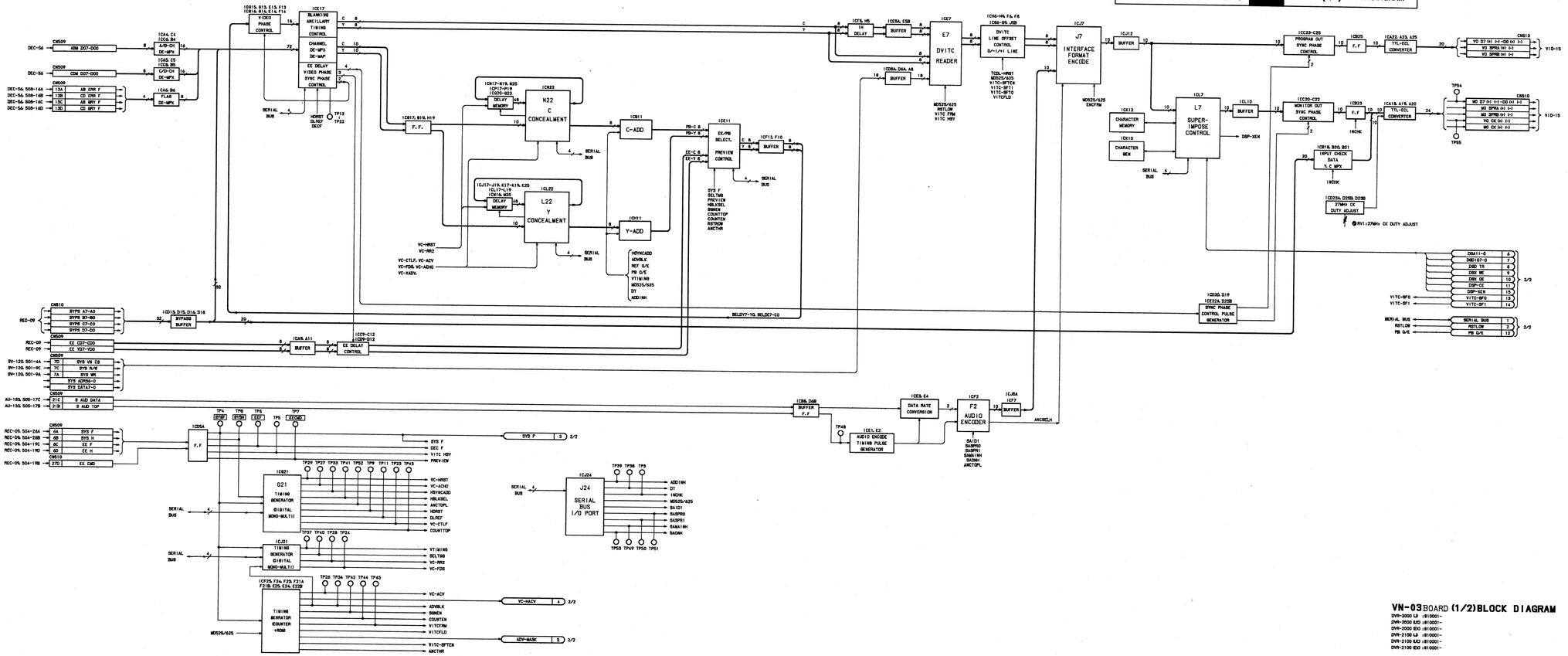

BLOCK DIAGRAM VN-03 (1/2) VN-03 (1/2) BLOCK DIAGRAM

VN-03 BOARD (1/2) BLOCK DIAGRAM

DVR-2000 LB (#10001-
DVR-2000 EAO (#10001-
DVR-2000 EO (#10001-
DVR-2100 LB (#10001-
DVR-2100 EAO (#10001-
DVR-2100 EO (#10001-

18-12

VN-03 (2/2) BLOCK DIAGRAM

BLOCK DIAGRAM VN-03 (2/2) VN-03 (2/2) BLOCK DIAGRAM

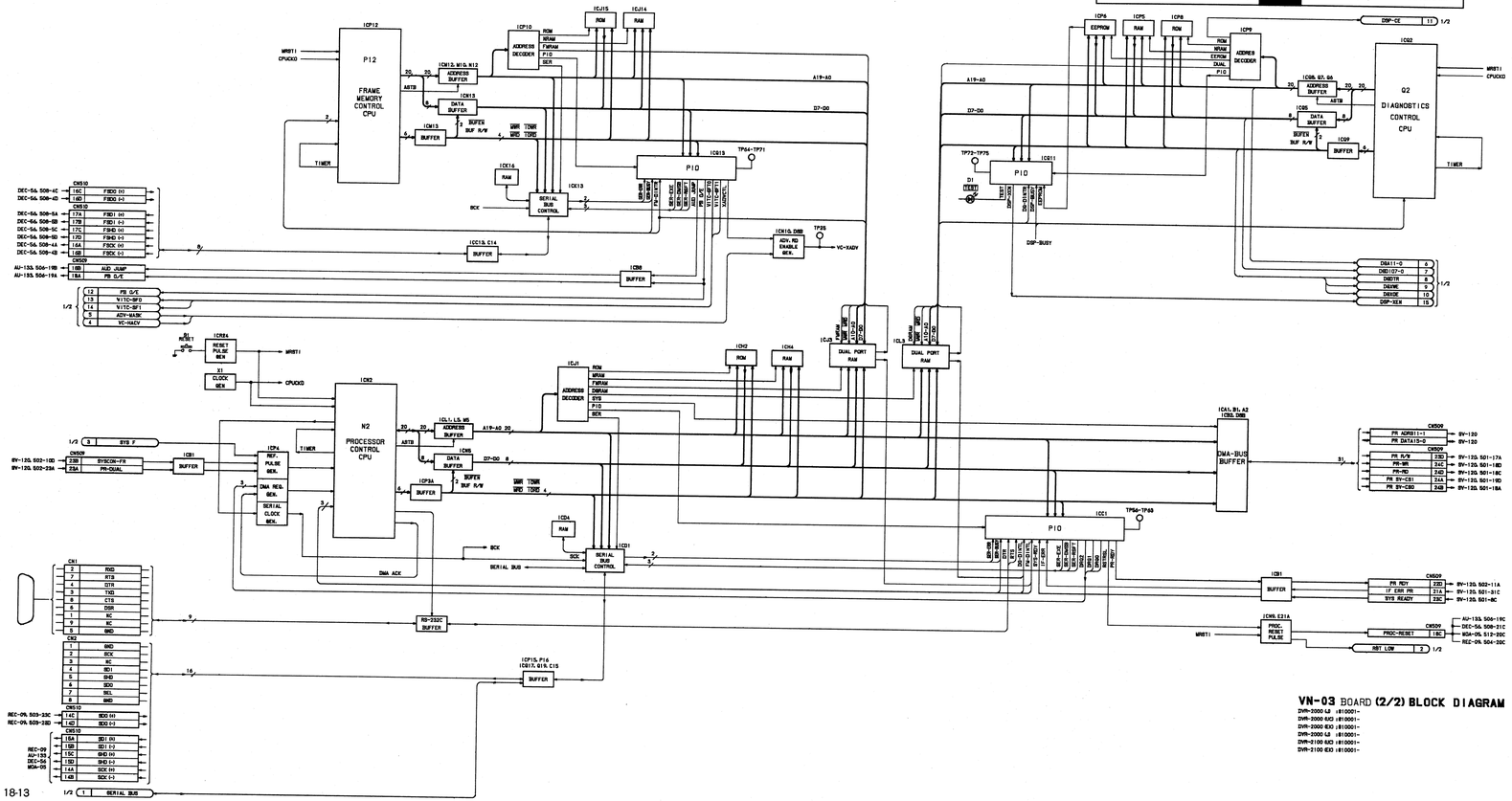

VN-03 BOARD **(2/2) BLOCK DIAGRAM**

DVR-2000 LJ (B10001-
DVR-2000 EJC (B10001-
DVR-2000 EJD (B10001-
DVR-2100 LJ (B10001-
DVR-2100 EJC (B10001-
DVR-2100 EJD (B10001-

BLOCK DIAGRAM VN-03 (2/2) VN-03 (2/2) BLOCK DIAGRAM

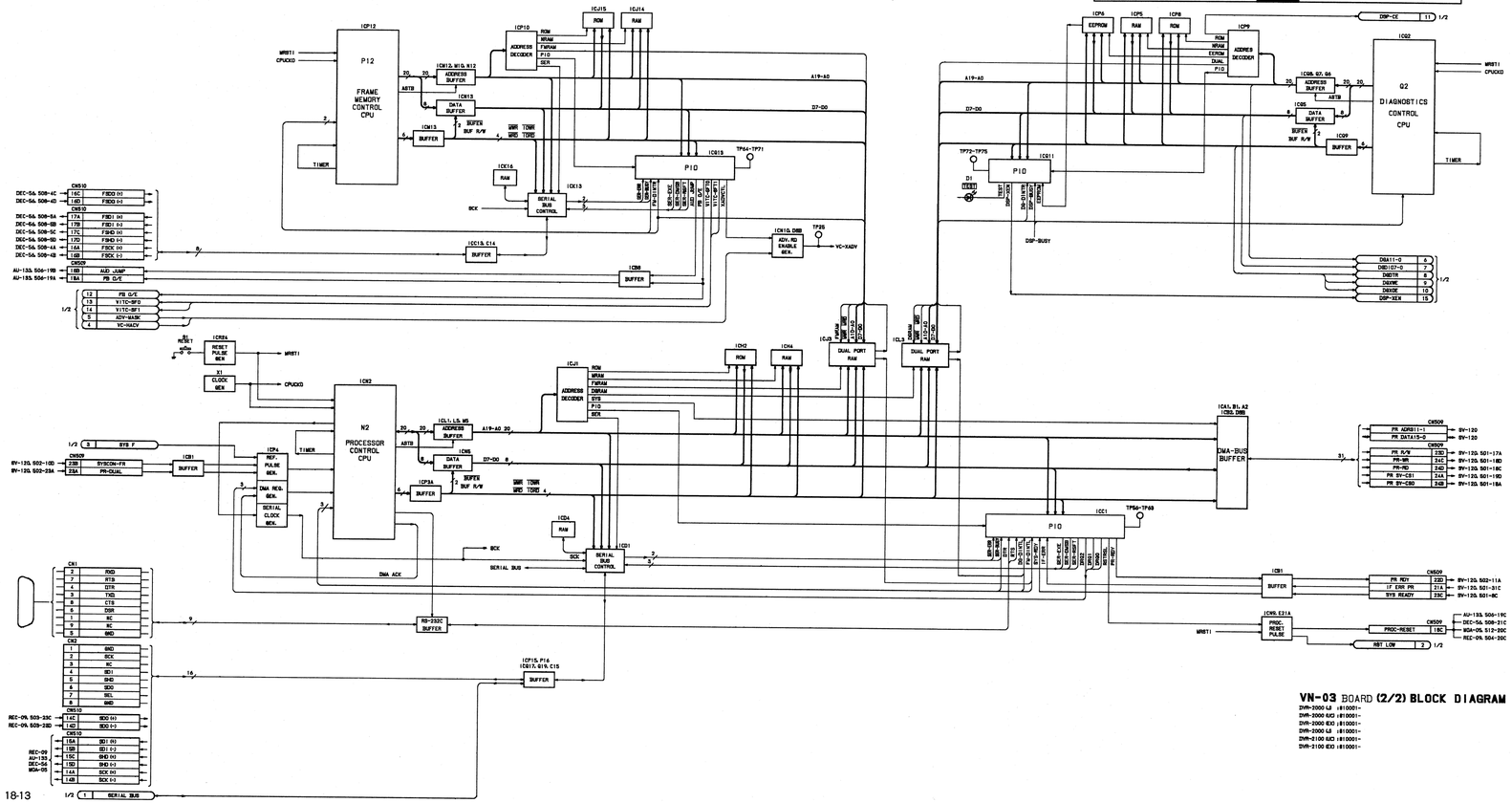

VN-03 BOARD **(2/2) BLOCK DIAGRAM**

DVR-3000 UJ (#10001-
DVR-3000 EJ (#10001-
DVR-2000 EJ (#10001-
DVR-2000 UJ (#10001-
DVR-2100 UJ (#10001-
DVR-2100 EJ (#10001-

BLOCK DIAGRAM AU-133 AU-133 BLOCK DIAGRAM

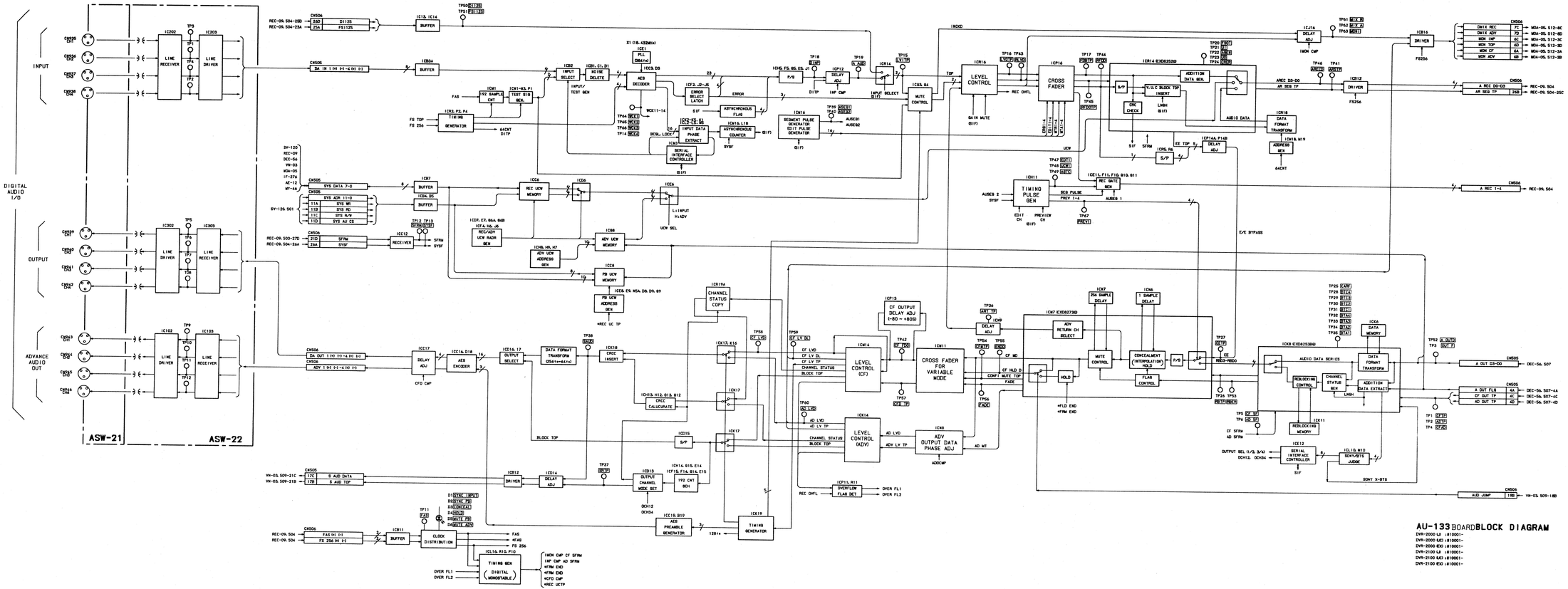

AU-133 BOARD BLOCK DIAGRAM

DVR-2000 LJ i810001~
DVR-2000 EJ/CJ i810001~
DVR-2000 EX/CX i810001~
DVR-2100 LJ i810001~
DVR-2100 EJ/CJ i810001~
DVR-2100 EX/CX i810001~

BLOCK DIAGRAM AU-133 AU-133 BLOCK DIAGRAM

AU-133 BLOCK DIAGRAM

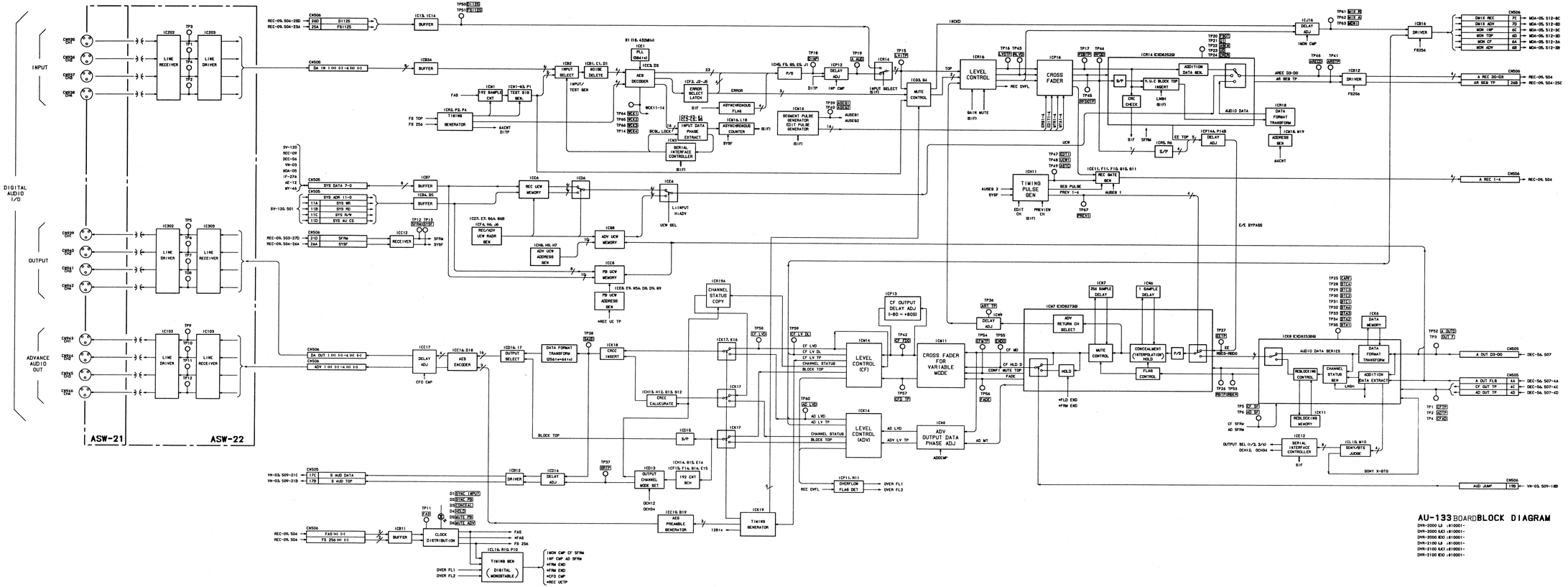

AU-133 BOARD BLOCK DIAGRAM

DVR-2000 LJ :#10001~
DVR-2000 KJ :#10001~
DVR-2000 EJ :#10001~
DVR-2100 LJ :#10001~
DVR-2100 KJ :#10001~
DVR-2100 EJ :#10001~

18-14

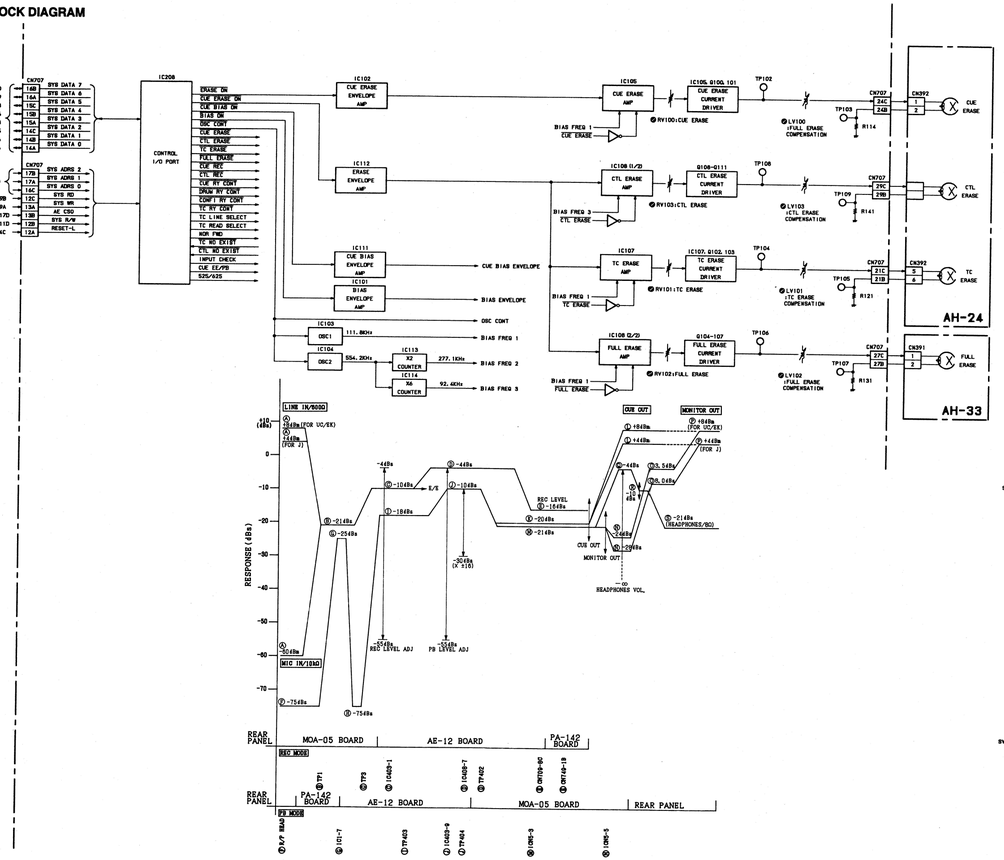

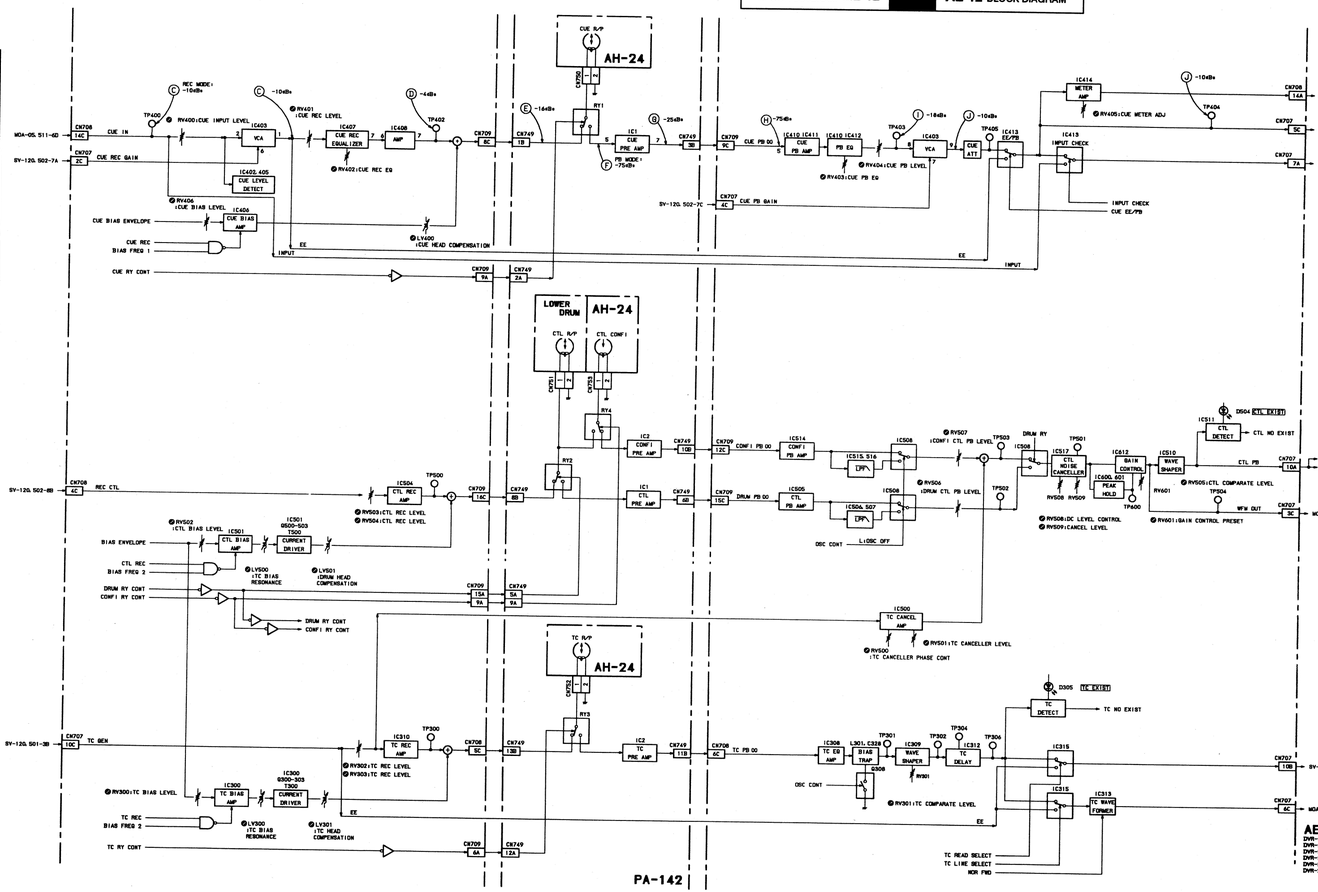

AE-12 BOARD BLOCK DIAGRAM

DVR-2000 LJ (#10001-)
DVR-2000 LJC (#10001-)
DVR-2000 EJC (#10001-)
DVR-2100 LJ (#10001-)
DVR-2100 LJC (#10001-)
DVR-2100 EJC (#10001-)

AE-12 BLOCK DIAGRAM

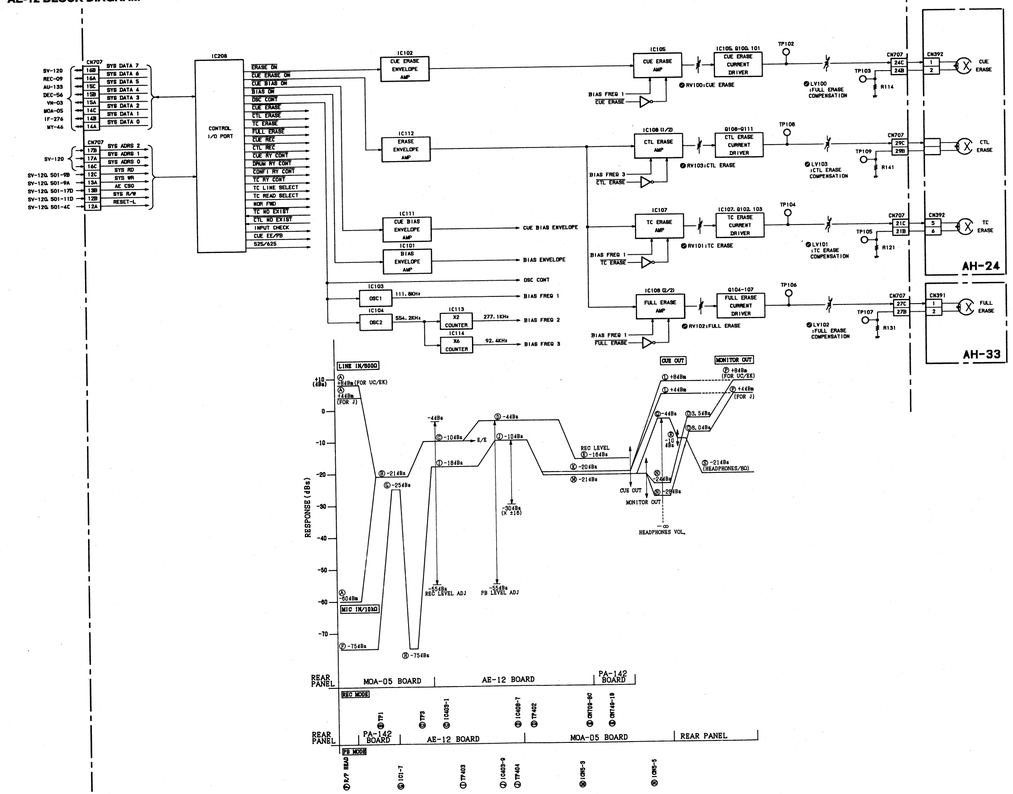

BLOCK DIAGRAM AE-12 AE-12 BLOCK DIAGRAM

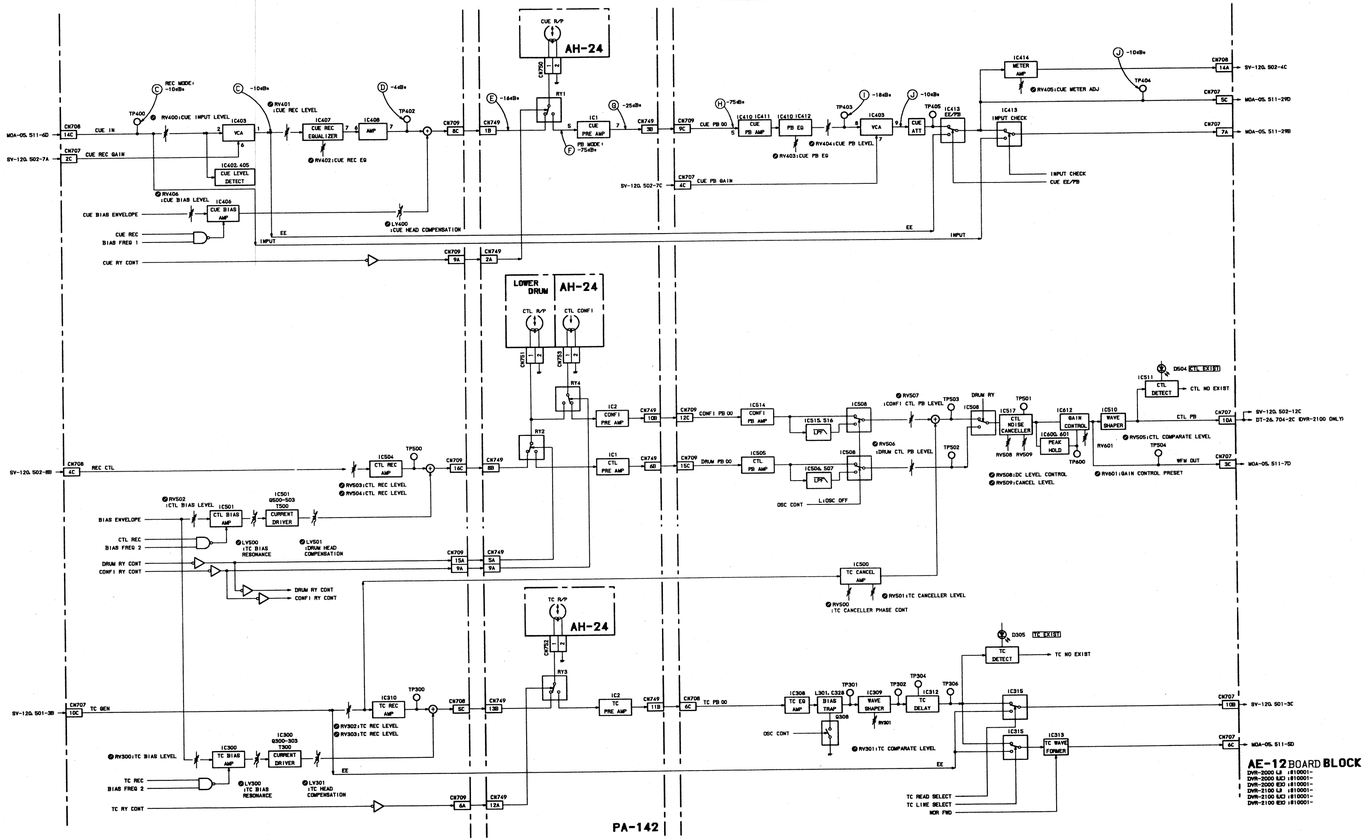

AE-12 BOARD BLOCK DIAGRAM

DVR-2000 LJ (#10001-)
DVR-2000 EJ (#10001-)
DVR-2000 EU (#10001-)
DVR-2100 LJ (#10001-)
DVR-2100 EJ (#10001-)
DVR-2100 EU (#10001-)

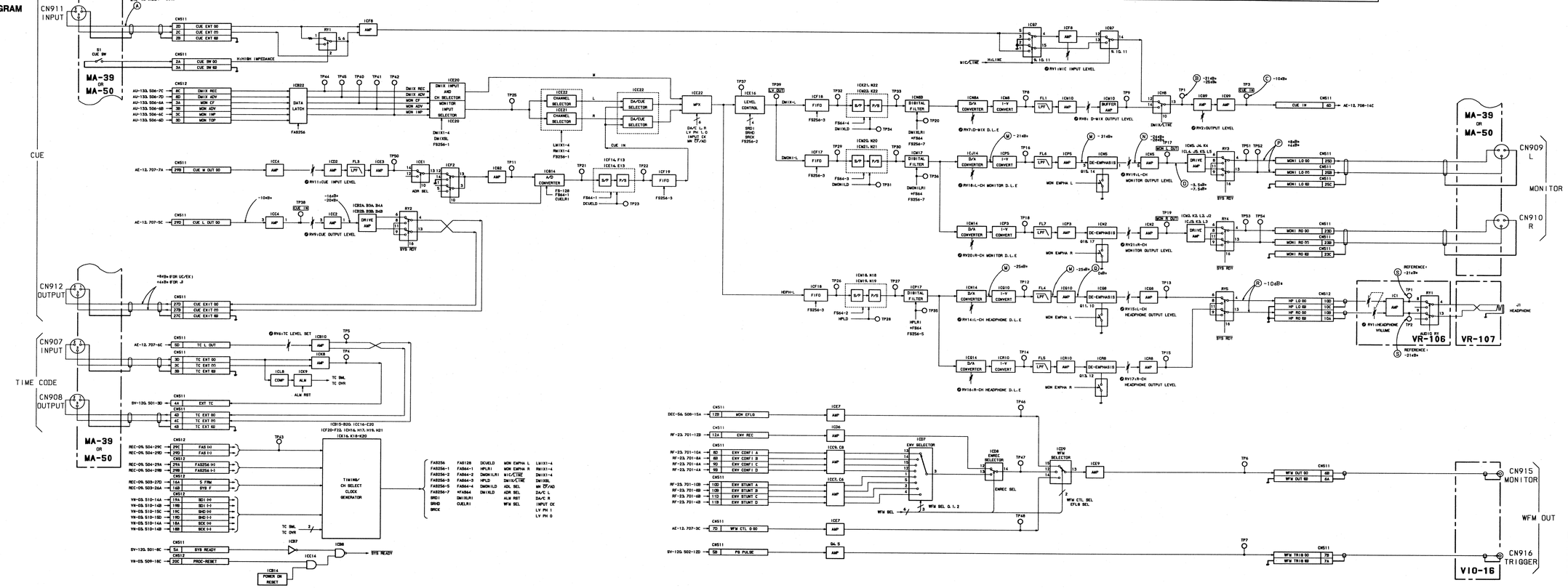

MOA-05 BOARD BLOCK DIAGRAM

DVR-2000 LB (#10001-)
DVR-2000 KCI (#10001-)
DVR-2000 EKO (#10001-)
DVR-2100 LB (#10001-)
DVR-2100 KCI (#10001-)
DVR-2100 EKO (#10001-)

MD-71 BLOCK DIAGRAM

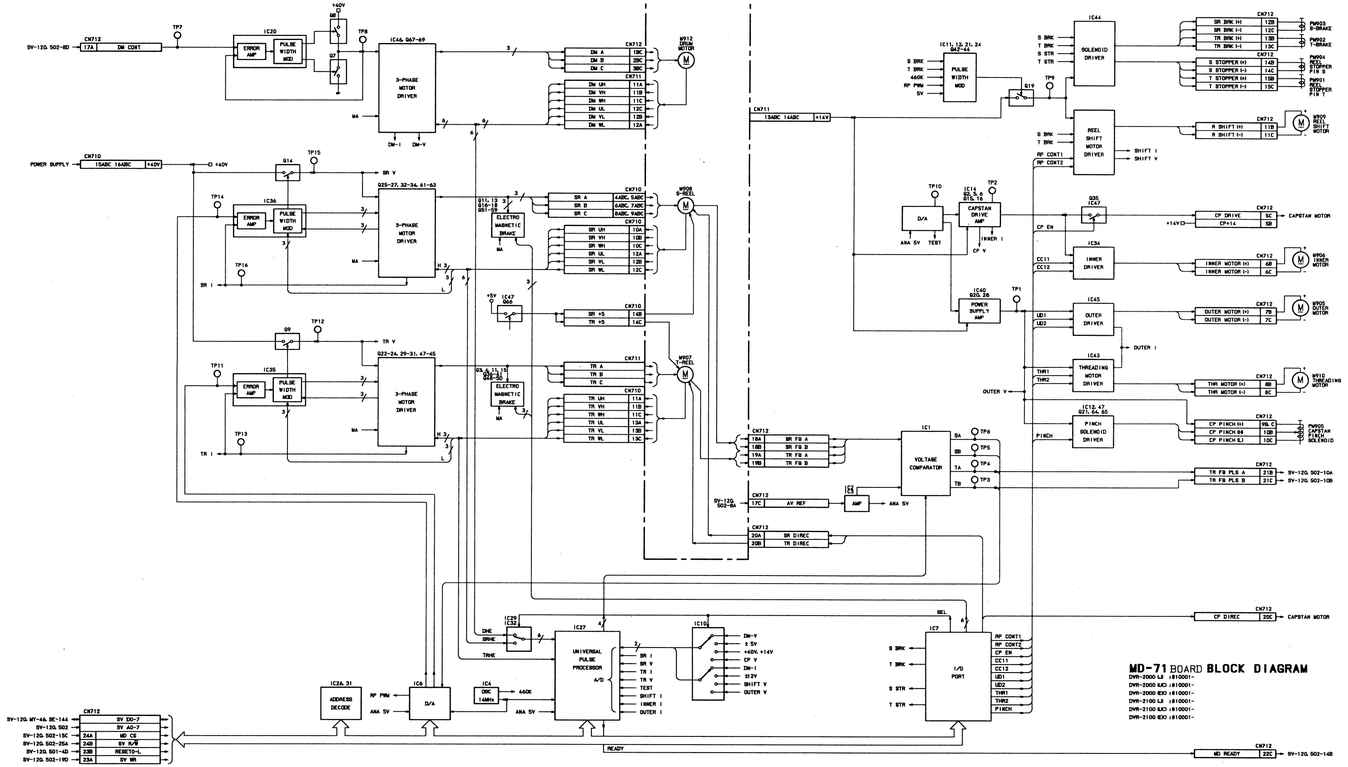

BLOCK DIAGRAM MD-71 MD-71 BLOCK DIAGRAM

18-17

SV-120 (1/2) BLOCK DIAGRAM

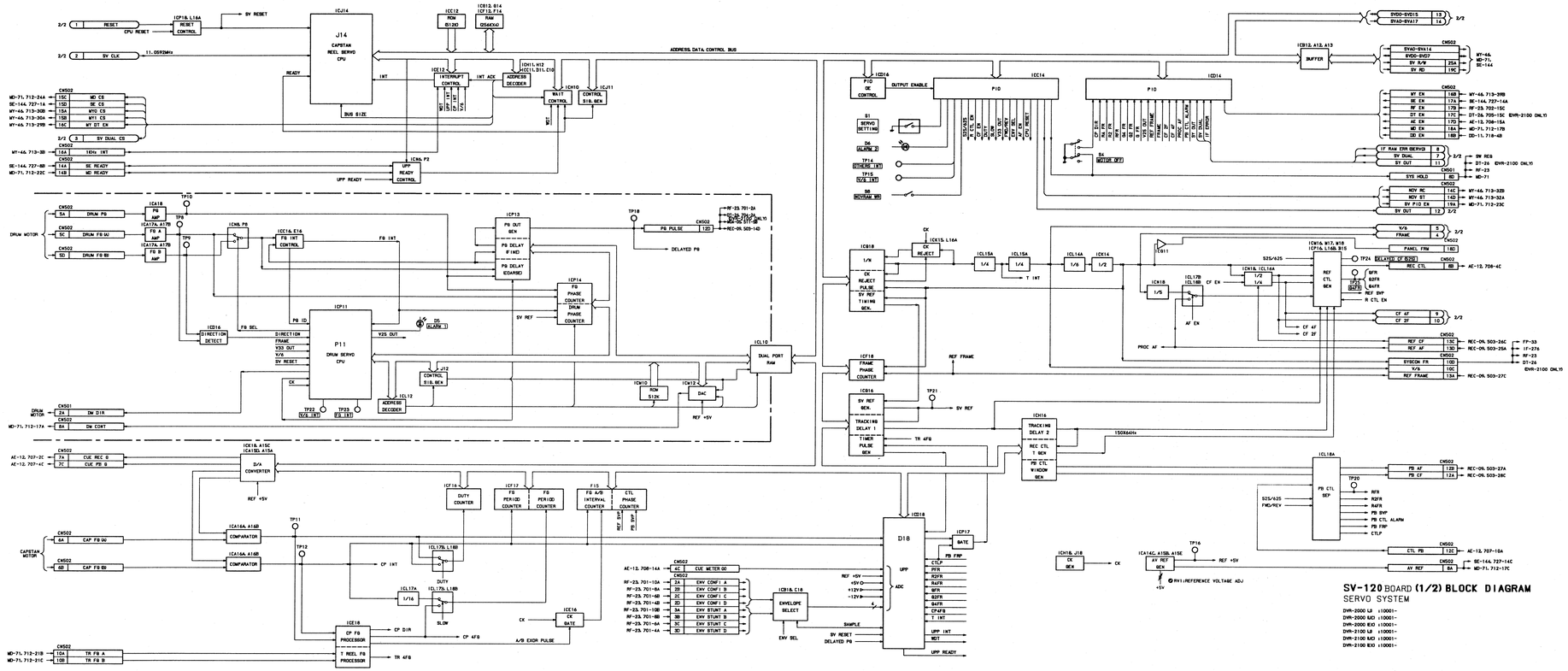

18-18

SV-120 (2/2) BLOCK DIAGRAM

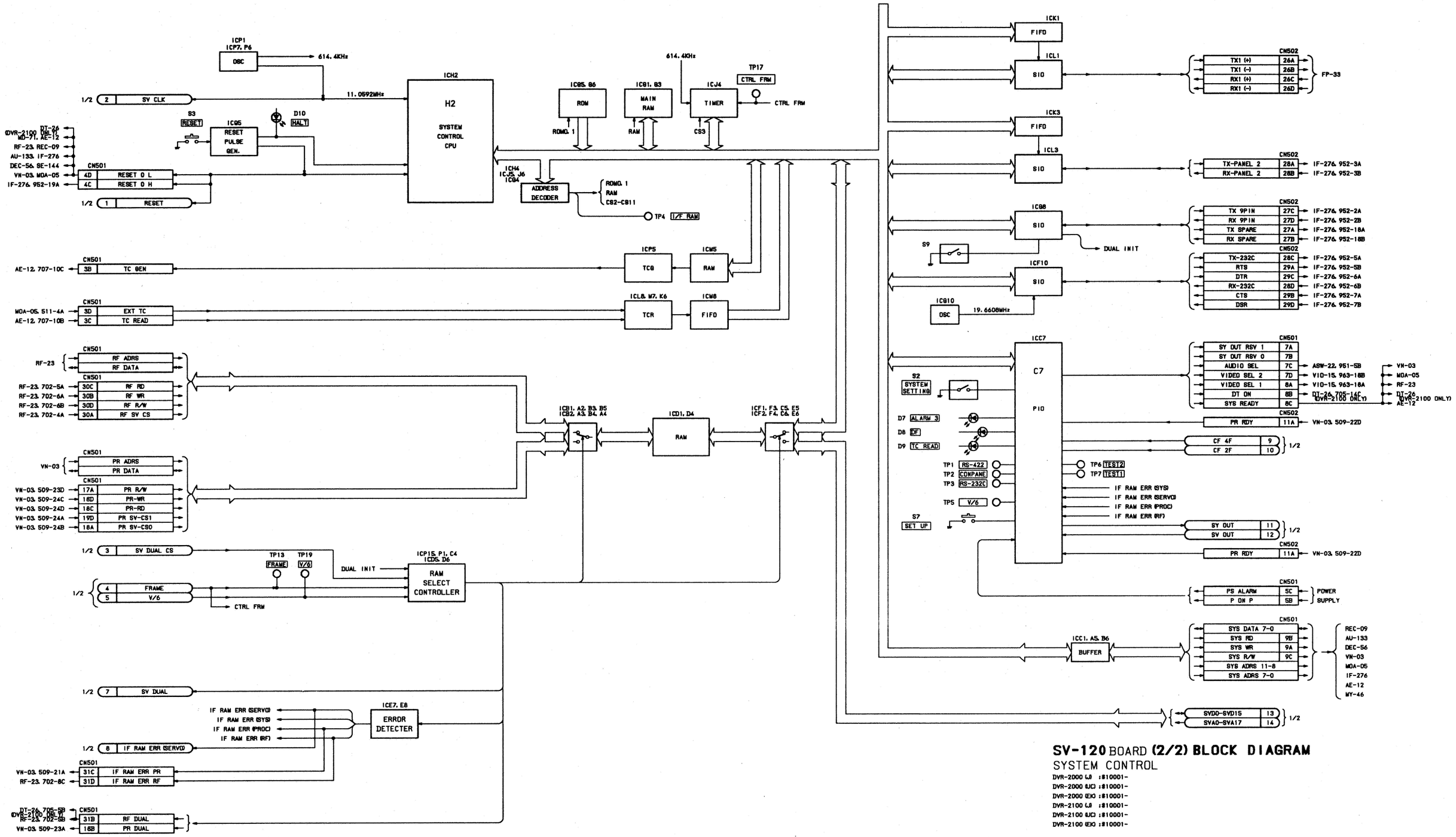

SV-120 BOARD **(2/2) BLOCK DIAGRAM**
SYSTEM CONTROL
DVR-2000 (J) :#10001-
DVR-2000 (UC) :#10001-
DVR-2000 (EK) :#10001-
DVR-2100 (J) :#10001-
DVR-2100 (UC) :#10001-
DVR-2100 (EK) :#10001-

18-19

IF-276 BLOCK DIAGRAM

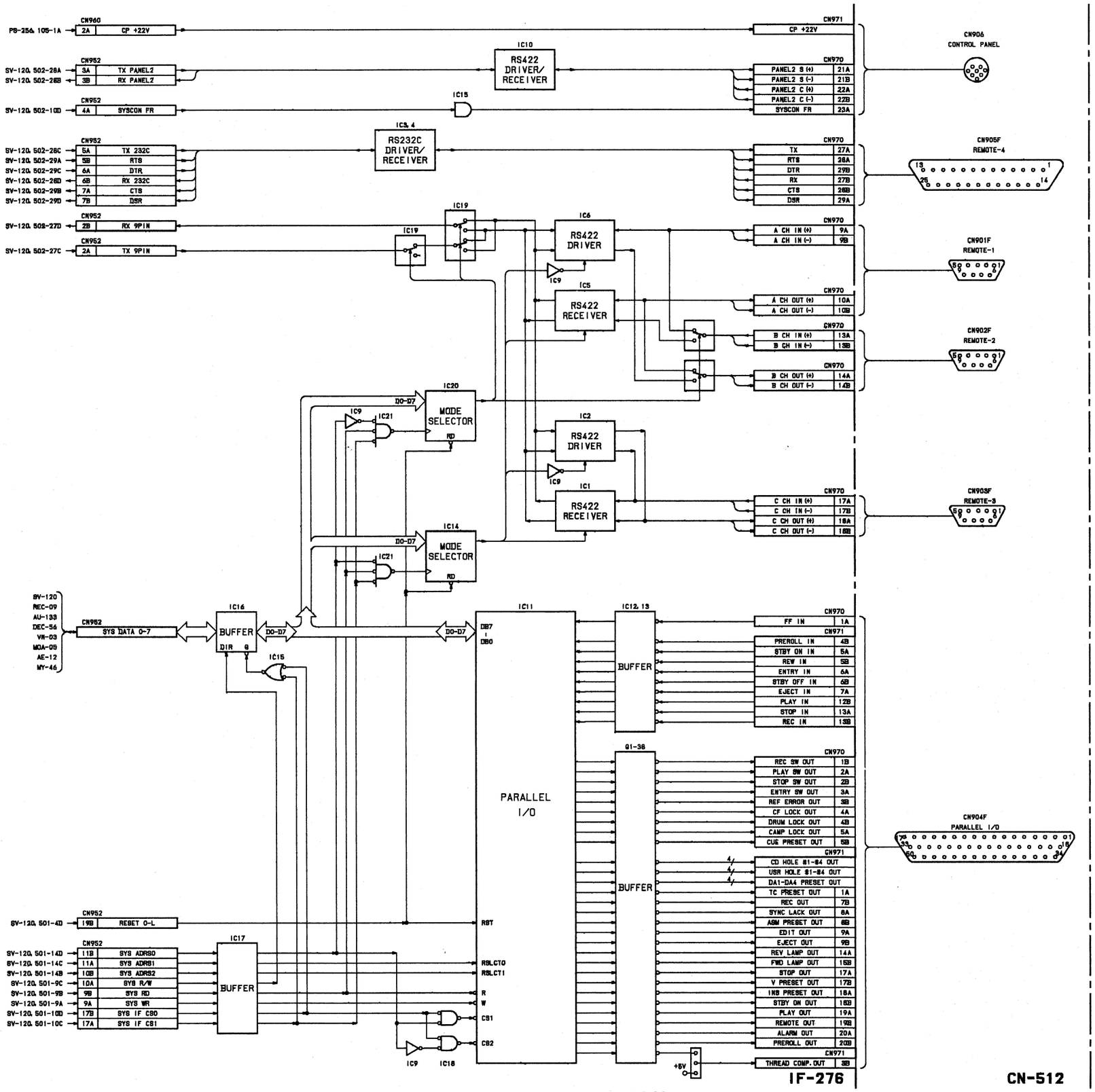

IF-276 BOARD **BLOCK DIAGRAM**

DVR-2000 (J) :#10001-
DVR-2000 (UC) :#10001-
DVR-2000 (EK) :#10001-
DVR-2100 (J) :#10001-
DVR-2100 (UC) :#10001-
DVR-2100 (EK) :#10001-

18-20

BLOCK DIAGRAM FUNCTION CONTROL PANEL FUNCTION CONTROL PANEL BLOCK DIAGRAM

FUNCTION CONTROL PANEL BLOCK DIAGRAM

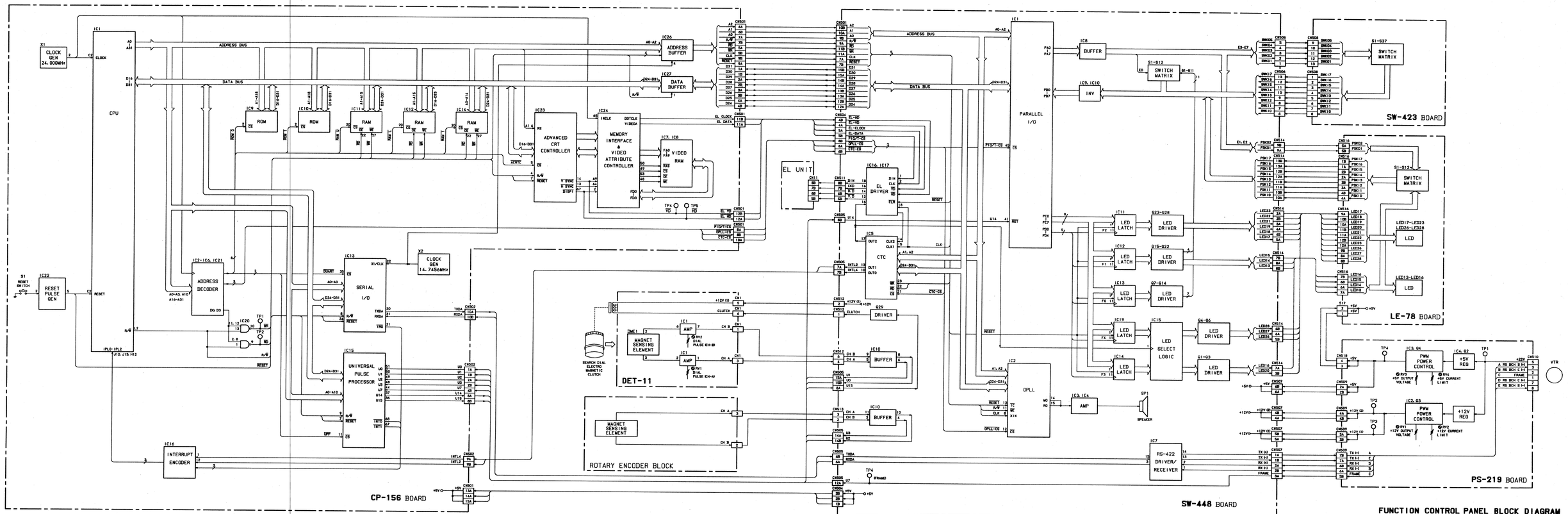

FUNCTION CONTROL PANEL BLOCK DIAGRAM

BKDV-2010:810001-
DVR-2000LB :810001-
DVR-2000KC:810001-
DVR-2000EKD:810001-
DVR210DLB :810001-
DVR210DKC:810001-
DVR210DEKD:810001-

BLOCK DIAGRAM FUNCTION CONTROL PANEL FUNCTION CONTROL PANEL BLOCK DIAGRAM

FUNCTION CONTROL PANEL BLOCK DIAGRAM

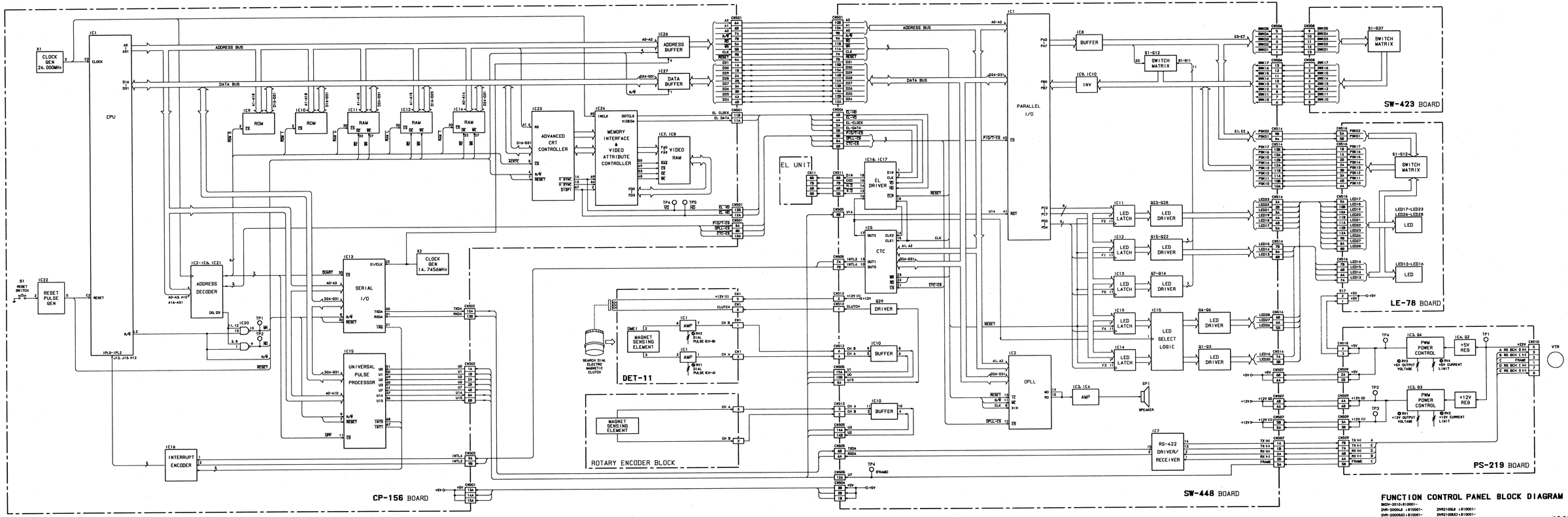

FUNCTION CONTROL PANEL BLOCK DIAGRAM

DVR-2000LA : #10001-
DVR-2000EG : #10001-
DVR-2000E3G : #10001-
DVR2100LA : #10001-
DVR2100EG : #10001-
DVR2100E3G : #10001-

18-21

BLOCK DIAGRAM POWER SUPPLY POWER SUPPLY BLOCK DIAGRAM

POWER SUPPLY BLOCK DIAGRAM

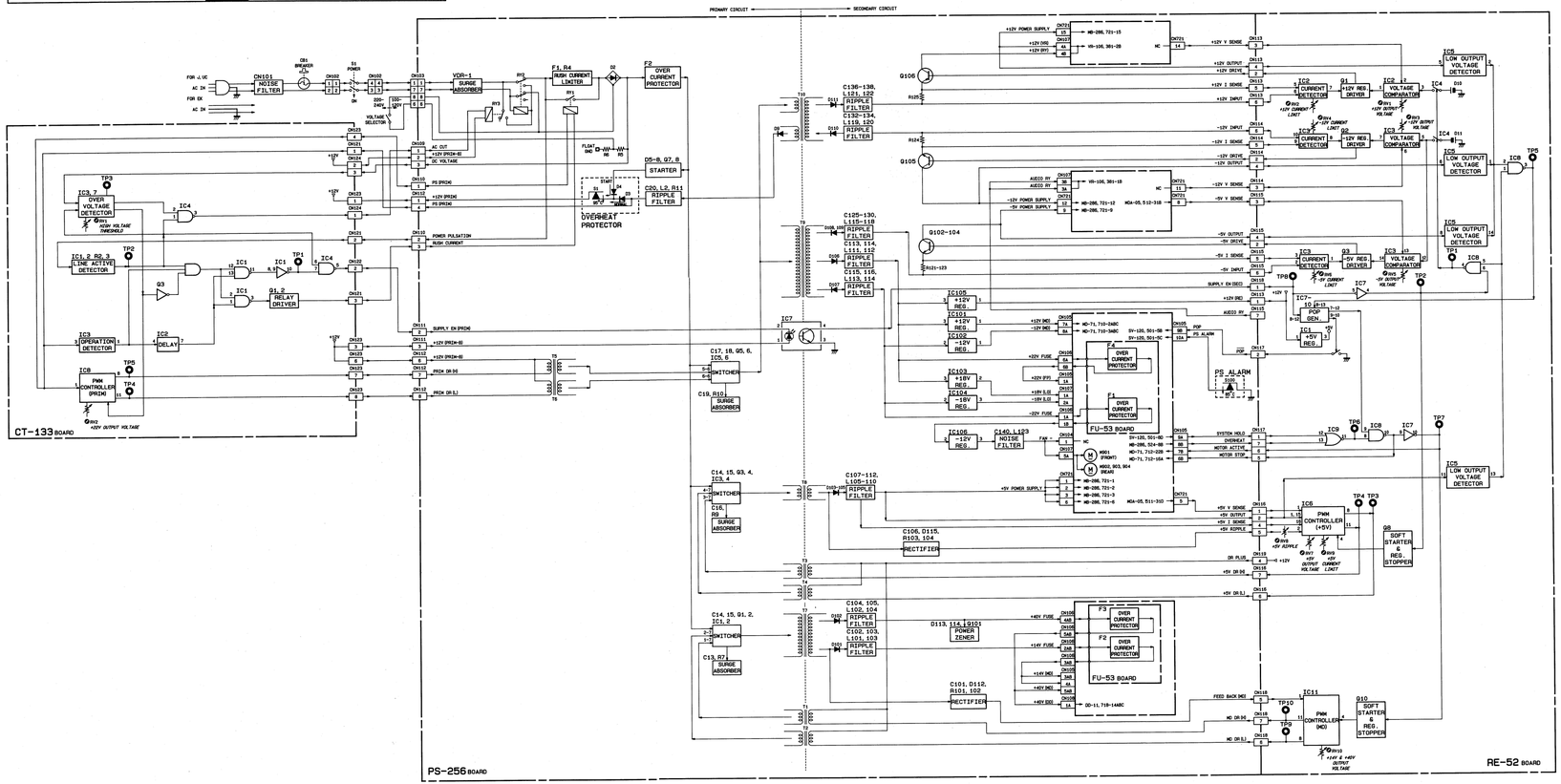

POWER SUPPLY BOARD BLOCK DIAGRAM
DVR-2000 (J) : #10001-
DVR-2000 (UC) : #10001-
DVR-2000 (EX) : #10001-
DVR-2100 (J) : #10001-
DVR-2100 (UC) : #10001-
DVR-2100 (EX) : #10001-

BLOCK DIAGRAM POWER SUPPLY POWER SUPPLY BLOCK DIAGRAM

POWER SUPPLY BLOCK DIAGRAM

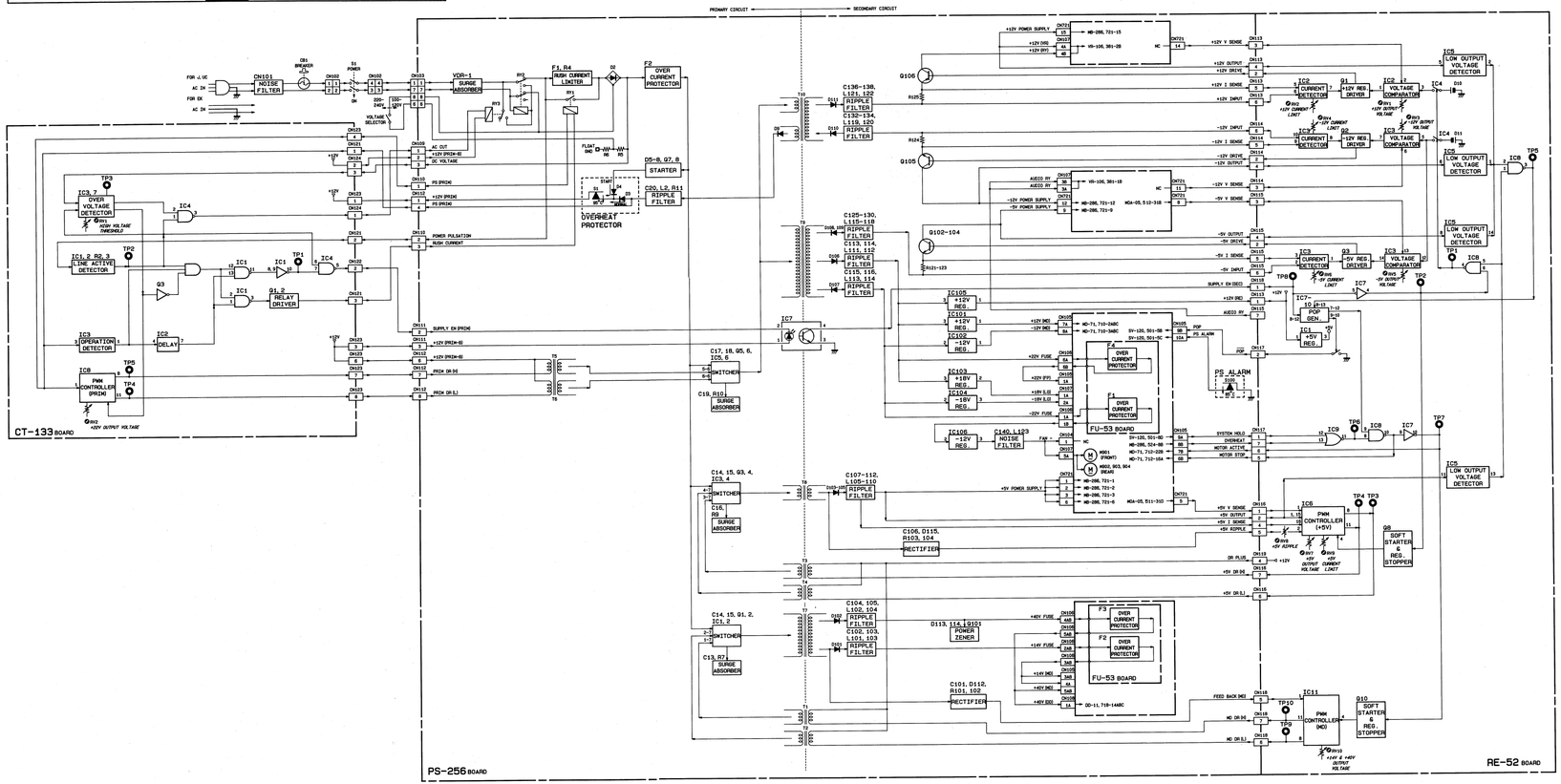

POWER SUPPLY BOARD BLOCK DIAGRAM
DVR-2000 (J) : #10001-
DVR-2000 (UC) : #10001-
DVR-2000 (EX) : #10001-
DVR-2100 (J) : #10001-
DVR-2100 (UC) : #10001-
DVR-2100 (EX) : #10001-

DT-26 BLOCK DIAGRAM

DVR-2100 ONLY

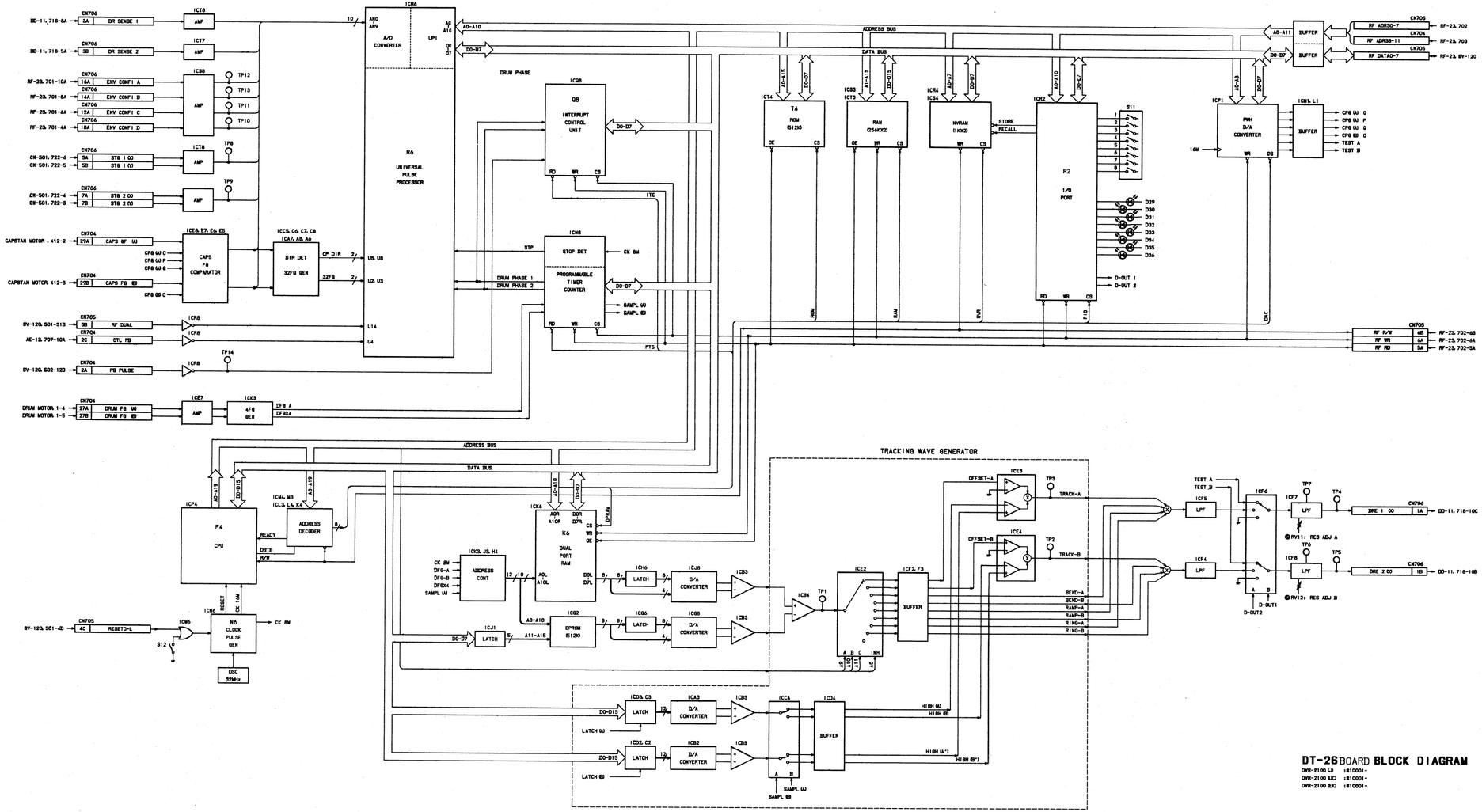

DT-26 BOARD BLOCK DIAGRAM

DVR-2100 KJ #810001-
DVR-2100 KJC #810001-
DVR-2100 EJ #810001-

SECTION 19
SCHEMATIC DIAGRAM

	Board Name	Function	Page
A	AE-12 Board :	Longitudinal Processor	19-91
	AH-24 Board :	Longitudinal R/P Head	19-150
	AH-33 Board :	Full Erase Head	19-150
	ASW-21 Board :	Digital Audio I/O Connector	19-153
	ASW-22 Board :	Digital Audio I/O Selector	19-134
	AU-133 Board :	Audio Signal Processor	19-79
C	CN-401 Board :	Reel Position Sensor Relaying	19-151, 152
	CN-481 Board :	Reel Motor Relaying	19-151
	CN-501 Board :	Drum CTL Relaying	19-150, 151
	CN-508 Board :	SE-144 Board Relaying	19-123
	CN-512 Board :	50P I/O, RS-232C, RS-422	19-154
	CN-581 Board :	S-Tension Sensor Relaying	19-152
	CP-156 Board :	Control Panel CPU	19-155
	CT-133 Board :	Regulator Controller	19-137
D	DD-11 Board :	DT Driver (DVR-2100 ONLY)	19-163
	DE-34 Board :	S-Tension Sensor (DME)	19-152
	DE-38 Board :	T-Tension Sensor (DME)	19-152
	DEC-56 Board :	PB Signal Processor	19-39
	DET-11 Board :	Rotary Encoder	19-157
	DT-26 Board :	Dynamic Tracking Control (DVR-2100 ONLY)	19-158
F	FP-33 Board :	Control Panel Cable Connector	19-154
	FU-53 Board :	Fuse Board	19-137
I	IF-276 Board :	System Control I/O	19-133
L	LE-62 Board :	Sensor, TAPE THICK/HC/REC INHIBIT	19-152
	LE-77 Board :	LED Indicator (Front Panel)	19-152
	LE-78 Board :	LED Indicator (Function Control Panel)	19-157
M	MA-39 Board :	CUE/TC/MONITOR I/O Connector	19-154
	MA-50 Board :	CUE/TC/MONITOR I/O Connector	19-154
	MB-285 Board :	TTP Mother	19-138
	MB-286 Board :	Processor Mother	19-143
	MD-71 Board :	Motor Driver	19-125
	MOA-05 Board :	Audio/Monitor Amp	19-95
	MT-47 Board :	Motor Relaying (Reel Shift/Threading)	19-151
	MY-46 Board :	NOV-RAM/Timer	19-130
P	PA-142 Board :	CUE/TC/CTL Head Amp	19-105
	PC-42 Board :	Sensor, T, S-Spring STR/USER Hole	19-151, 152
	PC-50 Board :	Inner Motor/Cassette Sensor Relaying	19-152
	PC-51 Board :	Inner Motor/Cassette Sensor Relaying	19-152
	PC-52 Board :	Inner Motor/Cassette Sensor Relaying	19-152
	PC-53 Board :	Sensor, Cassette In/M Size	19-152
	PC-54 Board :	Sensor, Inner Up/Outer Down	19-152
	PC-55 Board :	Sensor, Cassette Compartment	19-152
	PC-60 Board :	Sensor, Tape Center	19-152
	PC-64 Board :	Sensor, Tape Top/End	19-152
	PD-49 Board :	Power Rotary Transformer Driver	19-135
	PE-18 Board :	Power LED	19-154
	PS-219 Board :	Control Panel Power Supply	19-157
	PS-256 Board :	Power Supply	19-137
R	RE-52 Board :	Switching Regurator	19-137
	REC-09 Board :	REC Signal Processor	19-23
	RF-23 Board :	RF REC/PB Processor	19-17
S	SE-144 Board :	Sensor-1	19-119
	SV-120 Board :	Servo/System Control	19-107
	SW-423 Board :	Rubber Key	19-156
	SW-448 Board :	TTP Function Key	19-156, 157
T	TR-43 Board :	Sensor, TAPE THICK/HC/REC INHIBIT	19-152
	TR-83 Board :	Envelope Select	19-117
V	VIO-15 Board :	Digital Video I/O	19-131
	VIO-16 Board :	Reference Video I/O	19-132
	VN-03 Board :	PB Signal Processor	19-59
	VR-106 Board :	Headphones Monitor Amp	19-154
	VR-107 Board :	Headphones Jack	19-154

DVR-2000/2100
SCHEMATIC DIAGRAM (BOARD LIST)

(1/2)

BLOCK	BOARD	CIRCUIT FUNCTION	LOCATION	SUPPLY CODE
HEAD DRUM	DR-140	FLANGE ASSY	DRUM (LOWER)	U DRUM ASSY : S
	DR-142	DRIVE AMP FOR STRAIN GAUGE	DRUM (SCANNER)	U SCANNER ASSY : S
	DR-143-A	SCANNER ASSY	DRUM (SCANNER)	U SCANNER ASSY : S
	DR-143-B	SCANNER ASSY	DRUM (SCANNER)	U SCANNER ASSY : S
	DR-159	BRUSH SLIP RING ASSY	DRUM (LOWER)	U RING ASSY : S
	DR-172	RT STATOR ASSY	DRUM (UPPER)	U DRUM ASSY : S
	DR-173	SR CONTACT ASSY	DRUM (SCANNER)	U SCANNER ASSY : S
	DR-174	SLIP RING ASSY	DRUM (LOWER)	U RING ASSY : S
RF	RF-23	RF REC/PB PROCESS	CARD RACK (TTP)	O
DIGITAL VIDEO/ AUDIO PROCESS	REC-09	REC SIGNAL PROCESS	CARD RACK (PROC)	O
	DEC-56	PB SIGNAL PROCESS	CARD RACK (PROC)	O
	VN-03	PB SIGNAL PROCESS	CARD RACK (PROC)	O
	AU-133	AUDIO SIGNAL PROCESS	CARD RACK (PROC)	O
LONGITUDE AUDIO	AE-12	LONGITUDINAL PROCESS	CARD RACK (TTP)	O
	MOA-05	AUDIO/MONITOR AMP	CARD RACK (PROC)	O
	PA-142	CUE/TC/CTL HEAD AMP		O
SERVO SYSTEM CONTROL	SV-120	SERVO/SYSTEM CONTROL	CARD RACK (PROC)	O
	TR-83	ENVELOPE SELECT	CARD RACK (PROC)	O
	SE-144	SENSOR-1	CARD RACK (TTP)	O
	CN-508	SENSOR-2/SE-144	TTP	U
	MD-71	MOTOR DRIVER	CARD RACK (TTP)	O
	MY-46	NOV-RAM/TIMER	REAR PANEL	O
CONNECTOR PANEL	VIO-15	DIGITAL VIDEO I/O	REAR PANEL	O
	VIO-16	REFERENCE VIDEO I/O	REAR PANEL	O
	MA-39 (UC, EK)	CUE/TC/MONITOR I/O CONNECTOR	REAR PANEL	U P.C.B. : O
	MA-50 (J)	CUE/TC/MONITOR I/O CONNECTOR	REAR PANEL	U P.C.B. : O
	IF-276	SYSTEM CONTROL I/O	REAR PANEL	U
	CN-512	50P I/O, RS-232C, RS-422	REAR PANEL	O
	ASW-21	DIGITAL AUDIO I/O CONNECTOR	REAR PANEL	O
	ASW-22	DIGITAL AUDIO I/O SELECTOR	REAR PANEL	U P.C.B. : O
POWER SUPPLY	CT-133	REGULATOR CONTROLLER	LEFT SIDE	O
	FU-53	FUSE BOARD	LEFT SIDE	U P.C.B. : O
	PS-256	POWER SUPPLY	LEFT SIDE	O
	RE-52	SWITCHING REGULATOR	LEFT SIDE	O
MOTHER	MB-285	TTP MOTHER	CARD RACK (TTP)	O
	MB-286	PROCESSOR MOTHER	CARD RACK (PROC)	O

(2/2)

BLOCK	BOARD	CIRCUIT FUNCTION	LOCATION	SUPPLY CODE
FRAME WIRING	AH-24	CUE/TC/CTL HEAD	TTP	U P.C.B. : O
	AH-33	FULL ERASE HEAD	TTP	U P.C.B. : O
	CN-401	REEL POSITION/TS STOPPER SENSOR	TTP	U P.C.B. : O
	CN-481	T REEL/S REEL	TTP	U P.C.B. : O
	CN-501	DRUM CTL HEAD	TTP	U P.C.B. : O
	CN-581	TENSION SENSOR (S)	TTP	U P.C.B. : O
	DE-34	TENSION SENSOR (S)	TTP	U
	DE-38	TENSION SENSOR (T)	TTP	U
	DR-142	DRUM BOARD	TTP	U
	FL-122	FLEX CARD WIRE	TTP	U P.C.B. : O
	FP-33	CONTROL PANEL RELAY	FRONT	U P.C.B. : O
	LE-62	CASSETTE HOLE SENSOR	TTP	U
	LE-77	VTR STATUS INDICATOR	FRONT	U P.C.B. : O
	MT-47	REEL SHIFT/THREADING MOTOR	TTP	U P.C.B. : O
	PC-42	USER CENTER SENSOR	TTP	U P.C.B. : O
	PC-50	INNER. MOTOR/CASSETTE SENSOR	CASSETTE COMP.	U
	PC-51	INNER MOTOR/CASSETTE SENSOR	CASSETTE COMP.	U
	PC-52	INNER MOTOR/CASSETTE SENSOR	CASSETTE COMP.	U
	PC-53	SENSOR, CASSETTE IN/M SIZE	CASSETTE COMP.	U
	PC-54	SENSOR, INNER UP/OUTER DOWN	CASSETTE COMP.	U
	PC-55	SENSOR, CASSETTE COMPARTMENT	CASSETTE COMP.	U
	PC-60	AUDIO HEAD AMP	TTP	U
	PC-64	TAPE BEGINNING/END SENSOR	TTP	U
	PD-49	POWER ROTARY TRANSFORMER DRIVER	LEFT SIDE	O
	PE-18	POWER LED	FRONT	U P.C.B. : O
	TR-43	CASSETTE HOLE SENSOR	TTP	U
	VR-106	HEADPHONE VOL	FRONT	U P.C.B. : O
	VR-107	HEADPHONE	FRONT	U P.C.B. : O
EXTENSION	EX-244	EXTENSION FOR CARD RACK (PROC)	PACKING	O
	EX-245	EXTENSION FOR CARD RACK (TTP)	PACKING	O
	EX-288	EXTENSION FOR SE-144/DD-11	PACKING	O
FUNCTION CONTROL PANEL	DET-11	ROTARY ENCODER	CONTROL PANEL	U P.C.B. : O
	PS-219	CONTROL PANEL POWER SUPPLY	CONTROL PANEL	O
	LE-78	LED INDICATOR	CONTROL PANEL	O
	SW-423	RUBBER KEY	CONTROL PANEL	O
	SW-448	TTP FUNCTION KEY	CONTROL PANEL	O
	CP-156	CONTROL PANEL CPU	CONTROL PANEL	O
DT (DVR-2100 ONLY)	DT-26	DYNAMIC TRACKING CONTROL	CARD RACK (TTP)	O
	DD-11	DT DRIVER	RIGHT SIDE	O

PART LOCATION

AE-12 (1-639-123-11)

DVR-2000
DVR-2100

CN707	C4	IC304	D1	LV500	E1	RV504	F1
CN708	E4	IC305	C2	LV501	F3	RV505	G2
CN709	G4	IC306	C3			RV506	G1
		IC307	E3	Q100	A3	RV507	G1
D100	*B2	IC308	E4	Q101	B3		
D101	*B2	IC309	D4	Q102	B3	TH100	A2
D300	*E2	IC310	D3	Q103	B3	TH101	A2
D303	*C4	IC311	B2	Q104	A2	TH400	H2
D304	*C4	IC312	C3	Q105	A2	TH401	H2
D305	B1	IC313	C4	Q106	A3		
D400	*H3	IC314	D2	Q107	A3	TP102	B3
D401	*H2	IC315	C3	Q108	A2	TP103	C4
D404	*H3	IC316	C4	Q109	A2	TP104	C3
D405	*H1	IC400	H2	Q110	A3	TP105	C4
D500	*F1	IC402	H3	Q111	A3	TP106	B3
D504	B1	IC403	H2	Q300	E2	TP107	C4
		IC404	H2	Q301	E2	TP108	B3
E1	H1	IC405	H3	Q302	E2	TP109	B4
E2	F1	IC406	H4	Q303	E2	TP301	E4
E3	D1	IC407	H2	Q308	*E3	TP302	D4
E4	B1	IC408	H3	Q400	*H3	TP303	E2
E5	H4	IC409	H4	Q402	*H1	TP304	C3
E6	E3	IC410	H4	Q500	F2	TP305	D4
E7	D3	IC411	G3	Q501	F2	TP306	D1
E8	B2	IC412	H3	Q502	F2	TP400	H2
		IC413	G3	Q503	F2	TP401	G4
IC100	B1	IC414	H1			TP402	H3
IC101	A1	IC415	H1	RB200	C4	TP403	H3
IC102	A1	IC416	H2	RB201	D4	TP404	H1
IC103	B1	IC500	D3	RB202	C1	TP405	H3
IC104	B2	IC501	F1	RB203	C1	TP500	F2
IC105	A2	IC503	F1	RB204	C1	TP501	F4
IC106	A2	IC504	F2	RB205	B1	TP502	G4
IC107	B2	IC505	F3	RB206	C2	TP503	G4
IC108	A2	IC506	F3			TP504	F3
IC109	B2	IC507	F3	RV100	A2		
IC110	B3	IC508	G2	RV101	B2	T300	E2
IC111	A1	IC509	D2	RV102	A2	T500	F2
IC112	A1	IC510	G1	RV103	A2		
IC113	B1	IC511	D2	RV300	E2	* : B SIDE	
IC114	B1	IC512	D3	RV301	D3		
IC115	B2	IC513	D1	RV302	D1		
IC200	A3	IC514	G3	RV303	E1		
IC201	A3	IC515	G3	RV400	H2		
IC202	A3	IC516	G2	RV401	H1		
IC203	A3	IC517	F2	RV402	H3		
IC204	C3			RV403	H1		
IC205	C3	LV100	B4	RV404	H1		
IC207	C2	LV101	B4	RV405	H1		
IC208	C1	LV102	B4	RV406	H4		
IC210	C1	LV103	A4	RV500	E3		
IC211	C2	LV300	D2	RV501	D3		
IC300	E1	LV301	E3	RV502	F1		
IC303	E1	LV400	H4	RV503	G1		

AE-12 (1-639-123-12)

DVR-2000
DVR-2100

CN707	C4	IC210	C2	LV101	B3	RV503	F1
CN708	E4	IC211	C1	LV102	A3	RV505	G2
CN709	G4	IC300	D2	LV103	A3	RV506	G1
		IC303	C1	LV300	D2	RV507	E2
D100	*B2	IC304	C1	LV301	D4	RV508	F2
D101	*B2	IC305	D1	LV400	H3	RV509	G1
D102	*C4	IC306	E1	LV500	F2	RV510	F4
D300	*D2	IC307	C1			RV601	G2
D303	C2	IC308	E3	Q100	B3		
D304	C2	IC309	E3	Q101	B3	RY1	C4
D305	B1	IC310	D3	Q102	B3		
D400	*H1	IC311	D1	Q103	B3	T300	D3
D401	*H2	IC312	C1	Q104	A2	T500	F3
D404	*E1	IC313	E3	Q105	A2		
D405	*G2	IC314	C2	Q106	A3	TH100	A2
D500	*F2	IC315	C2	Q107	A3	TH101	A2
D501	G2	IC316	E1	Q108	A2	TH400	H2
D502	G2	IC402	H1	Q109	A2	TH401	G2
D504	B1	IC403	H1	Q110	A3		
D600	*G2	IC404	H2	Q111	A3	TP102	B3
D601	G2	IC405	G1	Q112	*C4	TP103	B3
		IC406	H3	Q300	D3	TP104	B3
E1	H1	IC407	H2	Q301	D2	TP105	B3
E2	G1	IC408	H3	Q302	D2	TP106	A3
E3	G3	IC409	G1	Q303	D3	TP107	A3
E4	F2	IC410	H3	Q308	*E3	TP108	A3
E5	E3	IC411	H3	Q400	*H3	TP109	A3
E6	D2	IC412	H2	Q500	F3	TP300	E1
E7	D3	IC413	E2	Q501	F2	TP301	E1
E8	B2	IC414	G2	Q502	F2	TP302	E3
		IC415	G3	Q503	F3	TP304	D2
IC100	C2	IC416	E2			TP306	D2
IC101	E2	IC500	D2	RB200	C3	TP400	H2
IC102	B1	IC501	F2	RB201	C3	TP402	H1
IC103	C1	IC504	F3	RB202	D3	TP403	H2
IC104	C1	IC505	F3	RB203	C2	TP405	G1
IC105	B2	IC506	F2	RB204	C3	TP500	F1
IC106	A1	IC507	F2	RB205	C2	TP501	G2
IC107	B2	IC508	E2	RB206	C3	TP502	E2
IC108	A1	IC509	G1			TP503	F1
IC109	B1	IC510	G3	RV100	B2	TP504	G1
IC110	A1	IC511	F1	RV101	B2	TP505	F1
IC111	H1	IC512	F1	RV102	A2	TP600	G2
IC112	B1	IC513		RV103	A2		
IC113	B1	IC514	F1	RV300	D1	* : B SIDE	
IC114	B1	IC515	F2	RV302	E1		
IC115	A1	IC516	G3	RV400	H2		
IC116	A1	IC517	F1	RV401	H1		
IC200	E4	IC600	G2	RV402	H2		
IC201	A1	IC601	G3	RV403	H2		
IC202	E4	IC602	G3	RV404	G1		
IC203	G1			RV405	G2		
IC204	C3	JP1	G2	RV406	H3		
IC205	C3	JP2	G2	RV500	D2		
IC207	D3			RV501	D2		
IC208	C3	LV100	B3	RV502	F1		

AE-12 (1-639-123-13)

DVR-2000
DVR-2100

CN707	D6	IC211	D1	LV101	C5	RV503	H1
CN708	G6	IC300	F3	LV102	B5	RV505	K3
CN709	K6	IC303	D2	LV103	A5	RV506	K1
		IC304	D1	LV300	F2	RV507	G3
D100	*B3	IC305	F1	LV301	F5	RV508	J3
D101	*C3	IC306	G1	LV400	L5	RV509	K2
D102	*D6	IC307	D1	LV500	H2	RV601	K3
D300	*F3	IC308	G5	LV501	H5	RV602	K5
D303	D2	IC309	G4			RV603	K4
D304	D2	IC310	F4	Q100	B4		
D305	C1	IC311	E1	Q101	C4	RY1	D6
D400	*L2	IC312	E2	Q102	C4		
D401	*M3	IC313	G5	Q103	C4	T300	F4
D404	*G2	IC314	E3	Q104	B3	T500	H4
D405	*K3	IC315	D3	Q105	B3		
D500	*H3	IC316	G1	Q106	B4	TH100	B3
D501	J3	IC402	L2	Q107	B4	TH101	A3
D502	J3	IC403	L2	Q108	A3	TH400	L2
D504	C1	IC404	L3	Q109	A3	TH401	K2
D600	*K2	IC405	L1	Q110	A4		
D601	K3	IC406	L4	Q111	A4	TP102	C4
		IC407	M3	Q112	*D5	TP103	B4
E1	L1	IC408	M4	Q300	F4	TP104	C4
E2	K2	IC409	K1	Q301	F3	TP105	C4
E3	K4	IC410	L5	Q302	F3	TP106	B4
E4	H3	IC411	L4	Q303	F4	TP107	B4
E5	G4	IC412	L3	Q400	*M4	TP108	A4
E6	F2	IC413	G2	Q500	H4	TP109	A4
E7	E4	IC414	K3	Q501	H3	TP300	G1
E8	C3	IC415	K5	Q502	H3	TP301	H1
E9	F1	IC416	G3	Q503	H4	TP302	G4
		IC500	F4			TP400	M3
IC100	D3	IC501	H3	RB200	D5	TP402	L1
IC101	G3	IC504	H5	RB201	E5	TP403	L3
IC102	B2	IC505	J5	RB202	E4	TP405	K1
IC103	D2	IC506	J3	RB203	E3	TP500	H1
IC104	D1	IC507	J3	RB204	E4	TP501	J3
IC105	B3	IC508	G2	RB205	D3	TP502	G3
IC106	A2	IC509	J1	RB206	D4	TP503	J1
IC107	C3	IC510	K4			TP504	J1
IC108	A2	IC511	J1	RV100	B3	TP505	J1
IC109	C1	IC512	H1	RV101	C3	TP506	K3
IC110	B2	IC514	J2	RV102	B3	TP507	K3
IC111	M2	IC515	J3	RV103	A3	TP600	K4
IC112	C2	IC516	K5	RV300	F2		
IC113	B1	IC517	J2	RV302	G1		
IC114	B1	IC600	K2	RV400	L3		
IC115	B1	IC601	K4	RV401	L1		
IC116	B1	IC602	K5	RV402	M3		
IC201	A1			RV403	L3		
IC203	K2	JP1	F1	RV404	K1		
IC204	D5	JP2	C4	RV405	K2		
IC205	D5	JP3	F1	RV406	M4		
IC207	E5	JP4	B4	RV500	F3		
IC208	D4			RV501	F3		
IC210	D2	LV100	C5	RV502	H2		

* : B SIDE

AU-133 (1-639-118-11)

DVR-2000
DVR-2100

CN505	A5	TP17	P16
CN506	A14	TP18	P6
		TP19	P11
D1	R3	TP20	R14
D2	R3	TP21	R13
D3	R2	TP22	R12
D4	R2	TP23	R11
D5	R2	TP24	R14
D6	R2	TP25	L8
		TP26	L7
E1	A3	TP27	P8
E2	A10	TP28	J9
E3	A19	TP29	J9
E4	G10	TP30	K10
E5	K1	TP31	K11
E6	J10	TP32	J10
E7	K19	TP33	K11
E8	L9	TP34	K11
E9	R2	TP35	K10
E10	P15	TP36	P8
E11	R19	TP37	D14
E12	R11	TP38	J16
E13	R11	TP39	M15
		TP40	M17
RB1	C12	TP41	A12
RB2	C9	TP42	M14
RB3	B15	TP43	P17
RB4	C16	TP44	P15
RB5	C14	TP45	P15
RB6	C14	TP46	A19
RB7	C13	TP47	G11
RB8	R1	TP48	G14
RB9	B8	TP49	H14
RB10	A5	TP50	B15
RB11	A4	TP51	B15
RB12	B2	TP52	G2
RB13	M3	TP53	L6
RB14	L4	TP54	L9
RB15	A6	TP55	M9
		TP56	L12
TP1	R4	TP57	M13
TP2	R4	TP58	M15
TP3	R5	TP59	J15
TP4	R5	TP60	K15
TP5	R5	TP61	A16
TP6	R6	TP62	B16
TP7	R6	TP63	B16
TP8	R7	TP64	B3
TP9	R7	TP65	C4
TP10	R8	TP66	A16
TP11	R8	TP67	J11
TP12	R8		
TP13	R9	X1	F2
TP14	A15		
TP15	R12		
TP16	R15		

IC No. on this board shows its address.

AU-133 (1-639-118-12)

DVR-2000
DVR-2100

CN505	A5	TP17	P16
CN506	A14	TP18	P6
		TP19	P11
D1	R3	TP20	R14
D2	R3	TP21	R13
D3	R2	TP22	R12
D4	R2	TP23	R11
D5	R2	TP24	R14
D6	R2	TP25	L8
		TP26	L7
E1	A3	TP27	P8
E2	A10	TP28	J9
E3	A19	TP29	J9
E4	G10	TP30	K10
E5	K1	TP31	K11
E6	J10	TP32	J10
E7	K19	TP33	K11
E8	L9	TP34	K11
E9	R2	TP35	K10
E10	P15	TP36	P8
E11	R19	TP37	D14
E12	R11	TP38	J16
E13	R11	TP39	M15
		TP40	M17
RB1	C12	TP41	A12
RB2	C9	TP42	M14
RB3	B15	TP43	P17
RB4	C16	TP44	P15
RB5	C14	TP45	P15
RB6	C14	TP46	A19
RB7	C13	TP47	G11
RB8	R1	TP48	G14
RB9	B8	TP49	H14
RB10	A5	TP50	B15
RB11	A4	TP51	B15
RB12	B2	TP52	G2
RB13	M3	TP53	L6
RB14	L4	TP54	L9
RB15	A6	TP55	M9
		TP56	L12
TP1	R4	TP57	M13
TP2	R4	TP58	M15
TP3	R5	TP59	J15
TP4	R5	TP60	K15
TP5	R5	TP61	A16
TP6	R6	TP62	B16
TP7	R6	TP63	B16
TP8	R7	TP64	B3
TP9	R7	TP65	C4
TP10	R8	TP66	A16
TP11	R8	TP67	J11
TP12	R8		
TP13	R9	X1	F2
TP14	A15		
TP15	R12		
TP16	R15		

IC No. on this board shows its address.

AU-133 (1-639-118-13)

DVR-2000
DVR-2100

CN1	D11	RB16	C17
CN2	D11		
CN3	A19	TP1	R5
CN4	A19	TP2	R5
CN505	A2	TP3	R6
CN506	A11	TP4	R6
		TP5	R7
D1	R5	TP6	R7
D2	R4	TP7	R7
D3	R4	TP8	R8
D4	R4	TP9	R8
D5	R3	TP10	R9
D6	R3	TP11	R12
		TP12	R12
E1	A3	TP13	R12
E2	A11	TP15	R12
E3	A19	TP16	R15
E4	G10	TP17	P16
E5	K1	TP18	P6
E6	J10	TP19	P11
E7	K19	TP24	G3
E8	L6	TP37	D13
E9	R1	TP38	H16
E10	P15	TP42	M14
E11	R19	TP43	P17
E12	R11	TP44	P15
E13	R11	TP45	P15
		TP53	L7
MF1	M2	TP54	M6
MF2	M2	TP58	M15
MF3	M2	TP60	K15
MF4	M2		
MF5	M2	X1	F1
MF6	M2		
MF7	M2		
MF8	M2		
MF9	L2		
MF10	L2		
MF11	L2		
MF12	L2		
RB1	C12		
RB2	B8		
RB3	B14		
RB4	C15		
RB5	C15		
RB6	C13		
RB7	C13		
RB8	R2		
RB9	B7		
RB10	B5		
RB11	B4		
RB12	B2		
RB13	M2		
RB14	L3		
RB15	B6		

IC No. on this board shows its address.

CN-508 (1-639-145-11)

DVR-2000
DVR-2100

CN734	C1
CN735	C1
CN736	E1
CN737	B1
CN742	C3
D1	*B3
D2	*B3
D3	*C3
D4	*C2
E1	A3
IC1	A1
IC2	B1
IC3	B2
IC4	B2
IC5	C2
IC6	C2
IC7	D2
IC8	E2
IC9	E2
Q1	*C1
Q2	*C1
Q3	*C2
Q4	*C1
Q5	*C1
Q6	*C1
Q7	*C2
Q8	*C2
RB1	D1
RB2	E1

* : B SIDE

DD-11 (1-630-521-11)

DVR-2100

CN338	D2
D601	B1
D602	B1
D603	B1
D604	B2
D605	B2
E601	A3
IC601	D1
Q601	B2
Q602	A2
Q701	C3
Q702	C3
Q703	C3
Q704	C3
Q705	C3
Q706	C2
Q707	C3
Q708	C3
Q709	D3
Q710	C3
Q711	D2
Q801	A3
Q802	B3
Q803	B3
Q804	B3
Q805	B3
Q806	B2
Q807	A3
Q808	A3
Q809	B3
Q810	B3
Q811	C2
RV601	A3
TP601	A1
T601	C2

DEC-56 (1-639-119-11)

DVR-2000
DVR-2100

CN507	A6	RB18	B17	TP53	D8
CN508	A15	RB19	D18	TP54	D8
		RB20	D19	TP55	D9
CP1	B1			TP56	D9
CP2	B1	TP1	N12	TP57	D10
CP3	B3	TP2	N12	TP58	D10
CP4	B4	TP3	N12	TP59	D11
CP5	B5	TP4	N12	TP60	D11
CP6	B5	TP5	N13	TP61	D12
CP7	B7	TP6	N13	TP62	D12
CP8	B6	TP7	N13	TP63	D13
CP9	B8	TP8	N13	TP64	D13
CP10	B8	TP9	N13	TP65	A13
CP11	B10	TP10	N14	TP66	A13
CP12	B9	TP11	N14	TP67	A13
CP13	B12	TP12	N14	TP68	A13
CP14	B12	TP13	N15	TP69	F17
CP15	B13	TP14	N15	TP70	F17
CP16	B13	TP15	N16	TP71	F17
		TP16	N16	TP72	F17
D1	N3	TP17	N16	TP73	F18
D2	N3	TP18	N17	TP74	F18
D3	N3	TP19	D1	TP75	F18
D4	N4	TP20	D1	TP76	F18
D9	N7	TP21	D1	TP77	F19
D10	N7	TP22	G1	TP78	F19
		TP23	G1	TP79	F19
E1	A1	TP24	D2	TP80	F19
E2	H1	TP25	D3	TP81	F20
E3	M1	TP26	D3	TP82	H18
E4	K7	TP27	D3	TP83	H19
E5	A9	TP28	D4	TP84	H19
E6	D12	TP29	D4	TP85	H17
E7	G12	TP30	D5		
E8	N11	TP31	A3	X1	F1
E9	A19	TP32	A3		
E10	G20	TP33	A3		
E11	N19	TP34	A3		
E12	N19	TP35	A4		
E13	N20	TP36	A4		
		TP37	A4		
RB1	N3	TP38	A4		
RB2	N5	TP39	A4		
RB5	C13	TP40	A4		
RB6	D13	TP41	A4		
RB7	C14	TP42	A4		
RB8	E14	TP43	A5		
RB9	A14	TP44	A5		
RB10	D15	TP45	A5		
RB11	F14	TP46	A5		
RB12	A16	TP47	D6		
RB13	B16	TP48	D6		
RB14	D16	TP49	D7		
RB15	E16	TP50	D7		
RB16	A16	TP51	D7		
RB17	B16	TP52	D8		

IC No. on this board shows its address.

DEC-56 (1-639-119-12)

DVR-2000
DVR-2100

CN507	A6		
CN508	A15	TP1	N12
		TP2	N12
CP1	B1	TP3	N12
CP2	B1	TP4	N12
CP3	B3	TP5	N13
CP4	B4	TP6	N13
CP5	B5	TP7	N13
CP6	B5	TP8	N13
CP7	B7	TP9	N13
CP8	B6	TP10	N14
CP9	B8	TP11	N14
CP10	B8	TP12	N14
CP11	B10	TP13	N15
CP12	B9	TP14	N15
CP13	B12	TP15	N16
CP14	B12	TP16	N16
CP15	B13	TP17	N16
CP16	B13	TP18	N17
		TP25	D3
D1	N3	TP26	D3
D2	N3	TP48	D6
D3	N3	TP49	D7
D4	N4	TP55	D9
D9	N7	TP56	D9
D10	N7	TP62	D12
		TP63	D13
E1	A1	TP83	H19
E2	H1	TP84	H19
E3	M1	TP85	H17
E4	K7		
E5	A9	X1	F1
E7	G12		
E8	N11		
E9	A19		
E10	G20		
E12	N19		
RB1	N3		
RB2	N5		
RB5	C13		
RB6	D13		
RB7	C14		
RB8	E14		
RB9	A14		
RB10	D15		
RB11	F14		
RB12	A16		
RB13	B16		
RB14	D16		
RB15	E16		
RB16	A16		
RB17	B16		
RB18	B17		
RB19	D18		
RB20	D19		

IC No. on this board shows its address.

DT-26 (1-639-124-11)

DVR-2100

CN704	F8	TP3	C1
CN705	L8	TP4	C1
CN706	R8	TP5	D1
		TP6	D1
D11	B5		
D13	B5	X1	P7
D14	B5		
D15	B6		
D16	B6		
D17	B6		
D18	B6		
D19	B7		
D20	B7		
D21	B7		
D22	B7		
D23	B8		
D24	B8		
D25	B8		
D26	B8		
D27	D7		
D28	F6		
D29	P1		
D30	Q1		
D31	Q1		
D32	R1		
D33	R1		
D34	R1		
D35	R1		
D36	S1		
D37	T1		
D38	S1		
E1	G1		
E2	A1		
E3	A8		
E4	T1		
E5	T8		
RB11	A6		
RB12	A8		
RB13	P2		
RB14	P3		
RB15	R1		
RB16	Q4		
RB17	S1		
RB18	R7		
RV11	F7		
RV12	F8		
RV13	G7		
RV14	G8		
S11	S1		
S12	T1		
TP1	B1		
TP2	B1		

IC No. on this board shows its address.

DT-26 (1-639-124-12)

DVR-2100

CN704	F8	S11	S1
CN705	L8	S12	T1
CN706	R8		
		TP1	B1
D11	B5	TP2	B1
D13	B5	TP3	C1
D14	B5	TP4	C1
D15	B6	TP5	D1
D16	B6	TP6	D1
D17	B6		
D18	B6	X1	P7
D19	B7		
D20	B7		
D21	B7		
D22	B7		
D23	B8		
D24	B8		
D25	B8		
D26	B8		
D27	D7		
D28	F6		
D29	P1		
D30	Q1		
D31	Q1		
D32	R1		
D33	R1		
D34	R1		
D35	R1		
D36	S1		
D37	T1		
D38			
E1	G1		
E2	A1		
E3	A8		
E4	T1		
E5	T8		
IC1			
IC3			
IC4			
IC5			
IC6			
RB11	A6		
RB12	A8		
RB17	S1		
RB18	R7		
RB19			
RB20			
RB21			
RB22			
RV11	F7		
RV12	F8		
RV13	G7		
RV14	G8		

IC No. on this board shows its address.

IF-276 (1-639-128-12)

DVR-2000
DVR-2100

CN952	C5	Q17	*F4
CN960	G1	Q18	*F4
CN970	*G1	Q19	*F4
CN971	*E6	Q20	*G4
		Q21	*G4
E1	A2	Q22	*G4
E2	G1	Q23	*G4
E3	A6	Q24	*G4
E4	E6	Q25	*G4
		Q26	*G4
F1	G6	Q27	*G4
		Q28	*G4
FB1	G6	Q29	*G4
		Q30	*G4
IC1	A1	Q31	*G4
IC2	B1	Q32	*G4
IC3	C1	Q33	*G4
IC4	D1	Q34	*G4
IC5	A2	Q35	*G4
IC6	B1	Q36	*G4
IC7	E1	Q37	*G4
IC8	F1	Q38	*G4
IC9	A3		
IC10	B3	RB1	G1
IC11	B4	RB2	C2
IC12	E2	RB3	G3
IC13	F2	RB4	B5
IC14	A4	RB5	B6
IC15	B4	RB6	C5
IC16	A4	RB7	E5
IC17	B4	RB8	E6
IC18	A6	RB9	G5
IC19	A1	RB10	G6
IC20	A3	RB11	B6
IC21	A4		
JP1	G6		
JS1	G6		
Q1	*G2		
Q2	*G2		
Q3	*G2		
Q4	*G2		
Q5	*G2		
Q6	*G2		
Q7	*G2		
Q8	*G2		
Q9	*G2		
Q10	*E4		
Q11	*E4		
Q12	*E4		
Q13	*E4		
Q14	*E4		
Q15	*E4		
Q16	*F4		

*: B SIDE

IF-276 (1-639-128-13)

DVR-2000
DVR-2100

CN952	C6	Q23	*G4
CN960	G1	Q24	*G4
CN970	G1	Q25	*G4
CN971	G6	Q26	*G4
		Q27	*G4
E1	A1	Q28	*G4
E4	E6	Q29	*G4
		Q30	*G4
F1	G6	Q31	*G4
		Q32	*G4
FBI	G6	Q33	*G4
		Q34	*G4
IC1	A1	Q35	*G4
IC2	B1	Q36	*G4
IC3	C1	Q37	*G4
IC4	D1	Q38	*G4
IC5	A2		
IC6	B2	RB1	G1
IC7	E2	RB2	D2
IC8	F2	RB3	G3
IC9	A3	RB4	B6
IC10	B3	RB5	B6
IC11	C4	RB6	C5
IC12	E3	RB7	F5
IC13	F3	RB8	F6
IC14	A5	RB9	G5
IC16	A6	RB10	G6
IC17	A5	RB11	B6
IC19	A2		
IC20	A3		
IC22	A4		
JP1	G6		
Q1	*G2		
Q2	*G2		
Q3	*G2		
Q4	*G2		
Q5	*G2		
Q6	*G2		
Q7	*G2		
Q8	*G2		
Q9	*G2		
Q10	*E4		
Q11	*E4		
Q12	*E4		
Q13	*E4		
Q14	*E4		
Q15	*E4		
Q16	*F4		
Q17	*F4		
Q18	*F4		
Q19	*F4		
Q20	*G4		
Q21	*G4		
Q22	*G4		

*: B SIDE

MD-71 (1-639-122-11)

DVR-2000
DVR-2100

CNI27	A2	IC6	C1	Q12	H2	Q68	*F5
		IC7	D1	Q13	H2	Q69	*F5
CN710	H5	IC8	B2	Q14	J2		
CN711	E5	IC9	C2	Q15	G3	RB1	C1
CN712	C5	IC10	C2	Q16	G3	RB2	C1
		IC11	D1	Q17	G3	RB3	C2
CR1	F2	IC12	D1	Q18	G3	RB4	B3
CR2	J2	IC13	E1	Q19	C3	RB5	A4
CR3	B3	IC14	D2	Q20	C3	RB6	A4
CR4	E3	IC15	D1	Q21	D3	RB7	A5
		IC16	E1	Q22	E3	RB8	B5
D1	B2	IC17	E1	Q23	E3	RB9	G5
D2	B2	IC18	D2	Q24	E3	RB10	G5
D3	F2	IC19	D2	Q25	H3		
D4	J2	IC20	E2	Q26	J3	TP1	D1
D5	E2	IC21	F1	Q27	J3	TP2	D1
D6	F2	IC22	F1	Q28	B4	TP3	D1
D7	J2	IC23	G1	Q29	F4	TP4	E1
D8	C3	IC24	H1	Q30	F4	TP5	E1
D9	D3	IC25	J1	Q31	G4	TP6	E1
D10	D3	IC26	J1	Q32	H4	TP7	E1
D11	E3	IC27	A2	Q33	H4	TP8	F1
D12	E3	IC28	A3	Q34	J4	TP9	F1
D13	F3	IC29	A3	Q35	*E1	TP10	F1
D14	F3	IC30	B3	Q36	*H1	TP11	H1
D15	G3	IC31	A3	Q37	*H1	TP12	H1
D16	G3	IC32	B3	Q38	*H1	TP13	H1
D17	H3	IC33	B3	Q39	*H1	TP14	H1
D18	H3	IC34	D3	Q40	*H2	TP15	H1
D19	H3	IC35	F3	Q41	*H1	TP16	H1
D20	J3	IC36	H3	Q42	*C3		
D21	J3	IC37	A4	Q43	*C3		
D22	D5	IC38	A4	Q44	*C3		
D23	*C2	IC39	B5	Q45	*E3		
D24	*C2	IC40	C5	Q46	*E3		
D25	*D1	IC41	C5	Q47	*F3		
D26	*E1	IC42	C4	Q48	*G2		
D27	*F2	IC43	D4	Q49	*G2		
D28	*C2	IC44	C5	Q50	*G3		
D29	*C4	IC45	D4	Q51	*G3		
D30	*G5	IC46	E4	Q52	*H2		
D31	*G5	IC47	D5	Q53	*H2		
D32	*G5	IC48	J5	Q54	*H2		
		IC49	J5	Q55	*H3		
E1	E1			Q56	*H3		
E2	G1	Q1	B1	Q57	*J3		
E3	A5	Q2	C2	Q58	*H3		
E4	J4	Q3	G2	Q59	*J3		
		Q4	G2	Q60	*J2		
FB1	B3	Q5	C2	Q61	*J3		
		Q6	D2	Q62	*J3		
IC1	A1	Q7	D2	Q63	*J3		
IC2	A1	Q8	E2	Q64	*C4		
IC3	A1	Q9	F2	Q65	*D4		
IC4	A2	Q10	F2	Q66	*E5		
IC5	A2	Q11	G2	Q67	*F5		

*: B SIDE

MD-71 (1-639-122-12)

DVR-2000
DVR-2100

CNI27	A2	IC9	C2	Q15	G3	RB1	C1
		IC10	C2	Q16	G3	RB2	C1
CN710	H5	IC11	D1	Q17	G3	RB3	C2
CN711	E5	IC12	D1	Q18	G3	RB4	B3
CN712	C5	IC13	E1	Q19	C3	RB5	A4
		IC14	D2	Q20	C3	RB6	A4
CR3	B3	IC15	D1	Q21	D3	RB7	A5
CR4	E3	IC16	E1	Q22	E3	RB8	B5
		IC17	E1	Q23	E3	RB9	G5
D1	B2	IC18	D2	Q24	E3	RB10	G5
D2	B2	IC19	D2	Q25	H3		
D3	F2	IC20	E2	Q26	J3	TP1	D1
D4	J2	IC21	F1	Q27	J3	TP2	D1
D5	E2	IC22	F1	Q28	B4	TP3	D1
D6	F2	IC23	G1	Q29	F4	TP4	E1
D7	J2	IC24	H1	Q30	F4	TP5	E1
D8	C3	IC25	J1	Q31	G4	TP6	E1
D9	D3	IC26	J1	Q32	H4	TP7	E1
D10	D3	IC27	A2	Q33	H4	TP8	F1
D11	E3	IC28	A3	Q34	J4	TP9	F1
D12	E3	IC29	A3	Q35	*E1	TP10	F1
D13	F3	IC30	B3	Q36	*H1	TP11	H1
D14	F3	IC31	A3	Q37	*H1	TP12	H1
D15	G3	IC32	B3	Q38	*H1	TP13	H1
D16	G3	IC33	B3	Q39	*H1	TP14	H1
D17	H3	IC34	D3	Q40	*H2	TP15	H1
D18	H3	IC35	F3	Q41	*H1	TP16	H1
D19	H3	IC36	H3	Q42	*C3		
D20	J3	IC37	A4	Q43	*C3		
D21	J3	IC38	A4	Q44	*C3		
D22	D5	IC39	B5	Q45	*E3		
D23	*C2	IC40	C5	Q46	*E3		
D24	*C2	IC41	C5	Q47	*F3		
D25	*D1	IC42	C4	Q48	*G2		
D26	*E1	IC43	D4	Q49	*G2		
D27	*F2	IC44	C5	Q50	*G3		
D28	*C2	IC45	D4	Q51	*G3		
D29	*C4	IC46	E4	Q52	*H2		
D30	*G5	IC47	D5	Q53	*H2		
D31	*G5	IC48	J5	Q54	*H2		
D32	*G5	IC49	J5	Q55	*H3		
				Q56	*H3		
E1	E1	Q1	B1	Q57	*J3		
E2	G1	Q2	C2	Q58	*H3		
E4	J4	Q3	G2	Q59	*J3		
		Q4	G2	Q60	*J2		
FB1	B3	Q5	C2	Q61	*J3		
		Q6	D2	Q62	*J3		
IC1	A1	Q7	D2	Q63	*J3		
IC2	A1	Q8	E2	Q64	*C4		
IC3	A1	Q9	F2	Q65			
IC4	A2	Q10	F2	Q66	*E5		
IC5	A2	Q11	G2	Q67	*F5		
IC6	C1	Q12	H2	Q68	*F5		
IC7	D1	Q13	H2	Q69	*F5		
IC8	B2	Q14	J2				

*: B SIDE

MOA-05 (1-639-121-11)

DVR-2000
DVR-2100

CN511	A6	Q6	A5	TP16	Q5
CN512	A17	Q7	H3	TP17	S6
		Q8	H1	TP18	Q2
D1	F7	Q10	P9	TP19	S3
D2	F9	Q11	P8	TP20	P7
D3	F8	Q12	S9	TP21	G15
D4	G7	Q13	S8	TP22	F12
D5	K7	Q14	P4	TP23	L17
D6	K8	Q15	N4	TP25	C21
D7	B4	Q17	P1	TP26	M18
D8	H4	Q18	N1	TP27	N17
D9	N2	Q19	R5	TP28	N17
D10	Q6			TP29	M20
		RB7	B22	TP30	N18
E1	G9	RB8	B22	TP31	N20
E3	E7	RB9	B21	TP32	E18
E4	H9	RB10	B18	TP33	N11
E5	A10	RB11	J20	TP34	L21
E8	M7	RB12	H21	TP35	N15
E9	N11			TP36	M17
E11	G3	RV1	F9	TP37	E15
E12	Q12	RV2	H10	TP38	S2
E13	Q7	RV6	B9	TP39	S14
E14	S12	RV7	N10	TP40	S21
E15	R7	RV8	M10	TP41	S20
E16	Q4	RV9	C2	TP42	S19
E17	S5	RV11	D2	TP43	S17
E18	Q2	RV13	F3	TP44	S16
E19	L9	RV14	N15	TP45	S15
E20	A21	RV15	Q9	TP46	E7
E21	B14	RV16	Q15	TP47	E8
E22	G16	RV17	Q9	TP48	E8
E23	G22	RV18	K15	TP50	E4
E24	M19	RV19	N6	TP51	G5
E25	N15	RV20	M15	TP52	H5
E26	D15	RV21	N3	TP53	G2
E27	N22			TP54	G3
E28	S18	RY1	F7		
E50	E2	RY2	A5		
E51	G4	RY3	H5		
E52	M5	RY4	H3		
E53	H2	RY5	Q6		
E54	M2				
		TP1	G8		
FL1	M9	TP3	S11		
FL3	E1	TP4	G8		
FL4	P11	TP5	A10		
FL5	R11	TP6	S7		
FL6	P6	TP7	S8		
FL7	P3	TP8	M7		
		TP9	S10		
Q1	F8	TP11	F3		
Q2	H6	TP12	Q12		
Q3	D8	TP13	Q7		
Q4	A8	TP14	R12		
Q5	A8	TP15	R7		

IC No. on this board shows its address.

MY-46 (1-639-133-11)

DVR-2000
DVR-2100

BT1	E2
BT2	E3
BT3	E4
CN1	A3
D1	D2
D2	D2
D3	D2
E1	A4
E2	D1
E3	D4
IC1	B1
IC2	B2
IC3	B2
IC4	B3
IC5	B3
IC6	B4
IC7	C2
IC8	C2
IC9	C3
IC10	C4
IC11	D1
JS1	D2
JW1	D2
JW2	D3
RB1	A2
RB2	A2
RB3	A3
RB4	A3
RB5	A4
RB6	A4
X1	C1

PD-49 (1-639-140-11, 12)

DVR-2000
DVR-2100

	CN374	B5
	CN378	E4
	CN379	A2
	CN388	B5
	D101	*B3
2)	D102	C3
2)	D103	B2
	D111	B4
2)	D112	C5
2)	D113	C4
2)	D201	B2
	D151	*B4
1)	E101	D2
1)	E102	D5
	E201	A1
	IC101	A4
	IC102	B4
	IC103	A3
	IC201	B1
	JP101	A5
2)	JP102	A5
	Q101	*B3
	Q102	*B3
	Q103	B3
	Q104	C2
	Q105	C3
	Q106	C2
	Q111	*B5
	Q112	*B4
	Q113	B5
	Q114	C4
	Q115	C5
	Q116	C4
	Q201	C2
2)	Q202	B2
	TP101	E2
	TP102	E5
1)	TP201	A2

*: B SIDE
1) FOR SUFFIX-11
2) FOR SUFFIX-12

PS-256 (1-639-630-11, 12)

DVR-2000
DVR-2100

CN103	B7			VDR1	A6
CN104	R1	FB101	G7		
CN105	S1	FB102	G7		
CN106	N2				
CN107	T1	F1	D6		
CN108	R1	F2	E7		
CN109	D5				
CN110	C4	IC1	G10		
CN111	K10	IC2	J10		
CN112	Q10	IC3	K10		
CN113	U2	IC4	M10		
CN114	S2	IC5	N10		
CN115	R2	IC6	P10		
CN116	P2	IC7	J10		
CN117	N2	IC101	P3		
CN118	M2	IC102	P3		
CN119	M4	IC103	P3		
CN120	J10	IC104	Q3		
		IC105	U3		
CP1	Q10	IC106	N3		
CP101	G6				
CP103	K6	Q1	G9		
CP104	K6	Q2	H9		
CP105	M6	Q3	K9		
CP106	N6	Q4	M9		
CP107	P6	Q5	N9		
CP108	P6	Q6	P9		
CP109	R6	Q7	R10		
CP110	R6	Q8	R9		
CP111	S6	Q101	J7		
		Q102	R3		
D1	C5	Q103	S3		
D2	D6	Q104	S3		
D3	R10	Q105	T3		
D4	R10	Q106	U3		
D5	R10	Q110	Q5		
D6	R10	Q111	Q4		
D7	R10	Q112	R4		
D8	T8	Q113	Q1		
D9	Q9	Q114	P4		
D10	D5				
D101	G7	RY1	D5		
D102	G7	RY2	B4		
D103	J7	RY3	C6		
D104	L7				
D105	L7	T1	G10		
D106	N7	T2	J10		
D107	P7	T3	K10		
D108	Q7	T4	M10		
D109	Q7	T5	N10		
D110	R7	T6	P10		
D111	S7	T7	G9		
D112	G6	T8	K9		
D113	H6	T9	P9		
D114	H6	T10	R9		
D115	N6				

RE-52 (1-630-525-11)

DVR-2000
DVR-2100

CN113	H2	RV7	D2
CN114	G2	RV8	E1
CN115	E2	RV9	D1
CN116	D2	RV10	A1
CN117	C2		
CN118	A2	TP1	C1
		TP2	C1
D1	H2	TP3	E2
D2	H2	TP5	C1
D3	G2	TP6	C1
D4	G1	TP7	B1
D5	G1	TP8	B1
D6	G1	TP10	B2
D7	F1		
D8	F1		
D9	F2		
D10	H1		
D11	G2		
D12	C2		
D13	A2		
D14	E1		
E1	H1		
E2	G2		
E3	C1		
IC1	H2		
IC2	G1		
IC3	F1		
IC4	G1		
IC5	F1		
IC6	D2		
IC7	B2		
IC8	B2		
IC9	C2		
IC10	C2		
IC11	A1		
Q1	G2		
Q2	G1		
Q3	F2		
Q4	F2		
Q5	G1		
Q6	G1		
Q7	G2		
Q8	D1		
Q9	D1		
Q10	B1		
Q11	A2		
RV1	H1		
RV2	G1		
RV3	F1		
RV4	F1		
RV5	F1		
RV6	E1		

REC-09 (1-639-117-11)

DVR-2000
DVR-2100

CN503	A5	TP4	N7
CN504	A13	TP5	N7
		TP6	N7
CP1	C3	TP7	N8
CP2	C3	TP8	N9
CP3	A5	TP9	F2
CP4	C5	TP10	L3
CP5	A6	TP11	J5
CP6	C6	TP12	J7
CP7	A7	TP13	J7
CP8	B7	TP14	J7
		TP15	L6
D1	A3	TP16	L6
D2	A3	TP17	L6
D3	B3	TP18	L7
D4	N2	TP19	L7
D5	N3	TP20	L7
D6	N4	TP21	C1
D7	N4	TP22	G1
D8	N5	TP23	D1
		TP24	C1
E1	A2	TP25	E1
E2	C1	TP26	E1
E3	J1	TP27	G2
E4	N1	TP28	E2
E5	A10	TP29	D9
E6	E10	TP30	D9
E7	H10	TP31	D9
E8	N11	TP32	D10
E9	A18	TP33	D10
E10	D19	TP34	K12
E11	K19	TP35	K12
E12	N19	TP36	K13
		TP37	K14
JP1	M16	TP38	K15
		TP39	N15
Q1	A2	TP40	N15
Q2	A4	TP41	N15
Q3	K13	TP42	N15
		TP43	N15
RB1	A10		
RB2	L10	X1	F1
RB3	B11	X2	G3
RB4	B11	X3	B15
RB5	B14		
RB6	J19		
RB7	J19		
RB8	K19		
RB9	N19		
RB10	L19		
RV1	N1		
TP1	N5		
TP2	N6		
TP3	N6		

IC No. on this board shows its address.

REC-09 (1-639-117-12)

DVR-2000
DVR-2100

CN503	A5	TP4	N7
CN504	A13	TP5	N7
		TP6	N7
CP1	C3	TP7	N8
CP2	C3	TP8	N9
CP3	A5	TP9	F2
CP4	C5	TP10	L3
CP5	A6	TP11	J5
CP6	C6	TP15	L6
CP7	A7	TP19	L7
CP8	B7	TP20	L7
		TP21	C1
D1	A3	TP22	G1
D2	A3	TP23	D1
D3	B3	TP24	C1
D4	N2	TP25	E1
D5	N3	TP26	E1
D6	N4	TP27	G2
D7	N4	TP28	E2
D8	N5	TP29	D9
		TP30	D9
E1	A2	TP31	D9
E2	C1	TP32	D10
E3	J1	TP33	D10
E4	N1	TP34	K12
E5	A10	TP35	K12
E6	E10	TP36	K13
E7	H10	TP37	K14
E8	N11	TP38	K15
E9	A18	TP39	N15
E10	D19	TP40	N15
E11	K19	TP41	N15
E12	N19	TP42	N15
		TP43	N15
JP1	M16		
		X1	F1
Q1	A2	X2	G3
Q2	A4	X3	B15
Q3	K13		
RB1	A10		
RB2	C10		
RB3	B11		
RB4	B11		
RB5	B14		
RB6	J19		
RB7	J19		
RB8	K19		
RB9	N19		
RB10	L19		
RV1	N1		
TP1	N5		
TP2	N6		
TP3	N6		

IC No. on this board shows its address.

RF-23 (1-639-125-11, 12)

DVR-2000
DVR-2100

CNI21	K3	1) IC14	B3	2) Q35	G3	TP3	A1
CNI22	K5	1) IC15	B3	2) Q36	A3	TP4	A1
CNI26	K3	1) IC16	C3	2) Q37	A3	TP5	C1
CNI27	K3	IC17	B4	2) Q38	A3	TP6	C1
CNI35	E4	IC18	B5	2) Q39	A3	TP7	C1
CNI36	F4	IC19	C5	2) Q40	A3	TP8	C1
		IC20	D5	2) Q41	B3	TP9	C1
CN601	J1	IC21	K3	2) Q42	A3	TP10	C1
CN701	D5	IC22	K5	2) Q43	B3	TP11	D1
CN702	F5	IC23	J5	2) Q44	B3	TP12	D1
CN703	H5	IC24	H2	2) Q45	B3	TP13	H1
CN728	E1	IC25	J3	2) Q46	B3	TP14	H1
CN729	F1	IC26	K3	2) Q47	B3	TP15	H1
CN730	B1	IC27	K3	2) Q48	B3	TP16	J2
CN731	B3	IC28	K1	2) Q49	C3	TP17	H2
CN732	D3	IC29	F5	2) Q50	B3	TP18	H2
CN740	E3	IC30	G4	2) Q51	C3	TP19	J1
CN741	G3	IC31	G5				
CN742	B2	IC32	H4	RB1	C1	X11	K2
CN743	D3	IC33	H5	RB2	D1		
CN744	D2	IC34	H5	RB3	D1		
CN745	E2	IC35	E4	RB4	E2		
CN746	E3	IC36	F4	RB5	E2		
CN747	F3	IC37	H3	RB6	F2		
CN748	F2	IC38	H3	RB7	G2		
CN749	H2			RB8	H1		
		LV1	C3	RB11	H1		
D11	K1	LV2	D3	RB12	J2		
D12	G1	LV3	E3				
D13	H1	LV4	E3	RV1	C3		
D14	H1	LV5	F3	RV2	C3		
D15	H1	LV6	F3	RV3	D3		
2) D101	*A2	LV7	G3	RV4	E3		
		LV8	G3	RV5	E3		
E1	B1			RV6	F3		
E2	F1	Q1	*B3	RV7	G3		
E3	G1	Q2	*A3	RV8	H3		
E4	A3	Q3	*B3	RV9	C2		
E5	C4	Q4	*B3	RV10	C2		
E6	J1	Q17	*E3	RV11	D2		
E7	K4	2) Q20	C3	RV12	E2		
		2) Q21	C3	RV13	E2		
IC1	A2	2) Q22	C3	RV14	F2		
IC2	B2	2) Q23	D3	RV15	G2		
IC3	C3	2) Q24	D3	RV16	H2		
IC4	E3	2) Q25	E3	2) RV17	A2		
IC5	F3	2) Q26	E3	2) RV18	B2		
IC6	G3	2) Q27	E3	2) RV19	B2		
IC7	C1	2) Q28	E3	2) RV20	B2		
IC8	E1	2) Q29	F3				
IC9	F2	2) Q30	F3	S11	K1		
IC10	G2	2) Q31	F3	S12	J3		
IC11	A4	2) Q32	F3				
IC12	B4	2) Q33	G3	TP1	A1		
1) IC13	A3	2) Q34	G3	TP2	A1		

* : B SIDE
1) FOR SUFFIX-11
2) FOR SUFFIX-12

RF-23 (1-639-125-14, 15)

DVR-2000
DVR-2100

CN601	J1	IC1	A2	Q17	*E3	RV1	C3
CN701	C5	IC2	B2	Q20	*C3	RV2	C3
CN702	F5	IC3	C2	Q21	*C3	RV3	D3
CN703	H5	IC4	E2	Q22	*C3	RV4	E3
CN728	E1	IC5	F2	Q23	*D3	RV5	E3
CN729	F1	IC6	G2	Q24	*D3	RV6	F3
CN730	B1	IC7	C1	Q25	*E3	RV7	G3
CN731	B3	IC8	E1	Q26	*E3	RV8	H3
CN732	D4	IC9	F2	Q27	*E3	RV9	C2
CN740	E4	IC10	G2	Q28	*E3	RV10	C2
CN741	F4	IC11	A4	Q29	*F3	RV11	D2
CN742	B3	IC12	B4	Q30	*F3	RV12	E2
CN743	D3	IC17	B4	Q31	*F3	RV13	E2
CN744	D2	IC18	B4	Q32	*F3	RV14	F2
CN745	E2	IC19	C5	Q33	*G3	RV15	G2
CN746	E3	IC20	D4			RV16	H2
CN747	F3	IC21	K3	Q34	*G3	RV17	A3
CN748	F2	IC22	K5	Q35	*G3		
CN749	H2	IC23	J5	Q36	*A3	RV18	B3
		IC24	H2	Q37	*A3	RV19	B3
CV1	C3	IC25	J3	Q38	*A3	RV20	B3
CV2	D3	IC26	K3	Q39	*A3		
CV3	E3	IC27	K3	Q40	*A3	S11	K1
CV4	E3	IC28	K1	Q41	*B3	S12	J3
CV5	F3	IC29	F5	Q42	*A3		
CV6	F3	IC30	G5	Q43	*B3	TP1	A1
CV7	G3	IC31	G5	Q44	*B3	TP2	A1
CV8	G3	IC32	H4	Q45	*B3	TP3	A1
		IC33	H5	Q46	*B3	TP4	A1
D11	*K1	IC35	E4	Q47	*B3	TP5	C1
D12	G1	IC36	F4	Q48	*B3	TP6	C1
D13	H1	IC37	H3	Q49	*C3	TP7	C1
D14	H1	IC38	H3	Q50	*B3	TP8	C1
D15	H1	IC40	A4	Q51	*C3	TP9	C1
D101	*A2	IC41	A5			TP10	C1
		IC42	A4	RB1	C1	TP11	D1
E1	B1			RB2	D1	TP12	D1
E2	E1	LV1	C3	RB3	D1	TP13	H1
E3	G1	LV2	D3	RB4	E2	TP14	H1
E4	A3	LV3	E3	RB5	E2	TP15	H1
E5	C4	LV4	E3	RB6	F2	TP16	J2
E6	J1	LV5	F3	RB7	G2	TP17	H2
E7	K4	LV6	F3	RB8	H1	TP18	H2
		LV7	G3	RB11	H1		
		LV8	G3	RB12	H2	X11	K2

* : B SIDE

SE-144 (1-639-132-11)

DVR-2000
DVR-2100

CNI16	C4	RB4	D5
		RB5	D5
CN356	E2		
CN727	C5	TP1	A2
CN738	A2	TP2	A2
CN739	A1	TP3	A2
CN741	C1	TP4	A2
D1	B2	X1	B3
D2	B2		
D3	D4		
D4	*D1		
D5	*D2		
D6	*B2		
D7	*B2		
D8	*B2		
D9	*B2		
D10	*C2		
D11	*C2		
D12	*C2		
D13	*D2		
E1	A1		
E2	E5		
F1	E1		
IC1	A1		
IC2	B1		
IC3	B1		
IC4	A2		
IC5	B2		
IC6	C2		
IC7	A3		
IC8	D3		
IC9	E3		
IC10	A4		
IC11	B3		
IC12	C3		
IC13	D3		
IC14	E4		
IC15	A4		
IC16	C4		
IC17	D4		
IC18	D5		
IC19	E5		
IC20	E5		
Q1	D1		
Q2	C4		
Q3	C4		
Q4	*D4		
RB1	E2		
RB2	C5		
RB3	C5		

* : B SIDE

RF-23 (1-639-125-13)

DVR-2000
DVR-2100

CN601	J1	IC17	B4	Q34	*G3	RV18	B3
CN701	C5	IC18	B4	Q35	*G3	RV19	B3
CN702	F5	IC19	C5	Q36	*A3	RV20	B3
CN703	H5	IC20	D5	Q37	*A3		
CN728	E1	IC21	K3	Q38	*A3	S11	K1
CN729	F1	IC22	K5	Q39	*A3	S12	J3
CN730	B1	IC23	J5	Q40	*A3		
CN731	B3	IC24	H2	Q41	*B3	TP1	A1
CN732	D4	IC25	J3	Q42	*A3	TP2	A1
CN740	E4	IC26	K3	Q43	*B3	TP3	A1
CN741	F4	IC27	K3	Q44	*B3	TP4	A1
CN742	B3	IC28	K1	Q45	*B3	TP5	C1
CN743	D3	IC29	F5	Q46	*B3	TP6	C1
CN744	D2	IC30	G5	Q47	*B3	TP7	C1
CN745	E2	IC31	G5	Q48	*B3	TP8	C1
CN746	E3	IC32	H4	Q49	*C3	TP9	C1
CN747	F3	IC33	H5	Q50	*B3	TP10	C1
CN748	F2	IC34	H5	Q51	*C3	TP11	D1
CN749	H2	IC35	E4			TP12	D1
		IC36	F4	RB1	C1	TP13	H1
D11	*K1	IC37	H3	RB2	D1	TP14	H1
D12	G1	IC38	H3	RB3	D1	TP15	H1
D13	H1			RB4	E2	TP16	J2
D14	H1	LV1	C3	RB5	E2	TP17	H2
D15	H1	LV2	D3	RB6	F2	TP18	H2
D101	*A2	LV3	E3	RB7	G2	TP19	J1
		LV4	E3	RB8	H1		
E1	B1	LV5	F3	RB11	H1	X11	K2
E2	E1	LV6	F3	RB12	H2		
E3	G1	LV7	G3			* : B SIDE	
E4	A3	LV8	G3	RV1	C3		
E5	C4			RV2	C3		
E6	J1	Q17	*E3	RV3	D3		
E7	K4	Q20	*C3	RV4	E3		
		Q21	*C3	RV5	E3		
IC1	A2	Q22	*C3	RV6	F3		
IC2	B2	Q23	*D3	RV7	G3		
IC3	C3	Q24	*D3	RV8	H3		
IC4	E3	Q25	*E3	RV9	C2		
IC5	F3	Q26	*E3	RV10	C2		
IC6	G3	Q27	*E3	RV11	D2		
IC7	C1	Q28	*E3	RV12	E2		
IC8	E1	Q29	*F3	RV13	E2		
IC9	F2	Q30	*F3	RV14	F2		
IC10	G2	Q31	*F3	RV15	G2		
IC11	A4	Q32	*F3	RV16	H2		
IC12	B4	Q33	*G3	RV17	A3		

SE-144 (1-639-132-11)

DVR-2000
DVR-2100

CNI16	C4	RB4	D5
		RB5	D5
CN356	E2		
CN727	C5	TP1	A2
CN738	A2	TP2	A2
CN739	A1	TP3	A2
CN741	C1	TP4	A2
D1	B2	X1	B3
D2	B2		
D3	D4	* : B SIDE	
D4	*D1		
D5	*D2		
D6	*B2		
D7	*B2		
D8	*B2		
D9	*B2		
D10	*C2		
D11	*C2		
D12	*C2		
D13	*D2		
E1	A1		
E2	E5		
F1	E1		
IC1	A1		
IC2	B1		
IC3	B1		
IC4	A2		
IC5	B2		
IC6	C2		
IC7	A3		
IC8	D3		
IC9	E3		
IC10	A4		
IC11	B3		
IC12	C3		
IC13	D3		
IC14	E4		
IC15	A4		
IC16	C4		
IC17	D4		
IC18	D5		
IC19	E5		
IC20	E5		
Q1	D1		
Q2	C4		
Q3	C4		
Q4	*D4		
RB1	E2		
RB2	C5		
RB3	C5		

SV-120 (1-639-116-11)

DVR-2000
DVR-2100

CN501	A5	RB13	C4	TP20	N18
CN502	A13	RB14	C4	TP21	P12
CN539	Q14	RB15	C1	TP22	Q13
CN540	K13	RB16	C1	TP23	Q13
		RB17	C7	TP24	Q16
CP1	N10	RB18	D8		
		RB19	D8		
D1	A15	RB20	D9		
D2	A15	RB21	E11		
D3	M2	RB22	F9		
D4	P6	RB23	H3		
D5	Q3	RB24	H3		
D6	Q3	RB25	J2		
D7	Q3	RB26	H13		
D8	Q4	RB27	H14		
D9	Q4	RB28	J13		
D10	Q5	RB29	H13		
D11	E17	RB30	J14		
		RB31	H15		
E1	A1	RB32	M11		
E2	A10	RB33	P9		
E3	A18	RB34	Q10		
E4	H1	RB35	Q12		
E5	G10	RB36	N12		
E6	J16	RB37	N14		
E7	Q1				
E8	M10	RV1	A15		
E9	Q18				
E10	Q6	S1	B14		
E11	Q13	S2	D7		
		S3	Q1		
FB1	Q15	S4	Q2		
		S5	Q13		
JP1	D8	S6	Q14		
JP2	Q16	S7	Q16		
JP3	Q17	S8	Q18		
JS1	D8	TP1	Q7		
JS2	Q16	TP2	Q7		
JS3	Q17	TP3	Q8		
		TP4	Q8		
Q1	A7	TP5	Q8		
Q2	A8	TP6	Q9		
		TP7	Q9		
RB1	A2	TP8	Q10		
RB2	A3	TP9	Q11		
RB3	A4	TP10	Q11		
RB4	A8	TP11	Q11		
RB5	A9	TP12	Q11		
RB6	A10	TP13	Q12		
RB7	A11	TP14	D14		
RB8	A14	TP15	D15		
RB9	A18	TP16	K16		
RB10	B1	TP17	N4		
RB11	B2	TP18	N14		
RB12	B3	TP19	N15		

IC No. on this board shows its address.

SV-120 (1-639-116-12)

DVR-2000
DVR-2100

CN501	A5	RB16	C1	TP24	Q16
CN502	A13	RB17	C7	TP25	L15
CN539	Q14	RB18	D8		
CN540	K13	RB19	D8		
		RB20	D9		
CP1	N10	RB21	E11		
		RB22	F9		
D1	A15	RB23	H3		
D2	A15	RB24	H3		
D3	M2	RB25	J2		
D4	P6	RB26	H13		
D5	Q3	RB27	H14		
D6	Q3	RB28	J13		
D7	Q3	RB29	H13		
D8	Q4	RB30	J14		
D9	Q4	RB31	H15		
D10	Q5	RB32	M11		
D11	E17	RB33	P9		
		RB34	Q10		
E1	A1	RB35	Q12		
E2	A10	RB36	N12		
E4	H1	RB37	N14		
E5	G10				
E6	J16	RV1	A15		
E8	M10				
E9	Q18	S1	B14		
E10	Q6	S2	D7		
E11	Q13	S3	Q1		
		S4	Q2		
FB1	Q15	S5	Q13		
		S6	Q14		
JP1	D8	S7	Q16		
JP2	Q16	S8	Q18		
JP3	Q17				
		TP1	Q7		
JS1	D8	TP2	Q7		
JS2	Q16	TP3	Q8		
JS3	Q17	TP4	Q8		
		TP5	Q8		
Q1	A7	TP6	Q9		
Q2	A8	TP7	Q9		
		TP8	Q10		
RB1	A2	TP9	Q11		
RB2	A3	TP10	Q11		
RB3	A4	TP11	Q11		
RB4	A8	TP12	Q11		
RB5	A9	TP13	Q12		
RB6	A10	TP14	D14		
RB7	A11	TP15	D15		
RB8	A14	TP16	K16		
RB10	B1	TP18	N14		
RB11	B2	TP19	N15		
RB12	B3	TP20	N18		
RB13	C4	TP21	P12		
RB14	C4	TP22	Q13		
RB15	C1	TP23	Q13		

IC No. on this board shows its address.

VIO-15 (1-639-126-11, 12)

DVR-2000
DVR-2100

CNI9	A11	IC12	A3
CNI10	A14	IC13	C9
CNI11	B6	IC14	C11
CNI12	A3	IC15	C11
		IC16	C12
CN100	A12		
CN101	A5	Q1	B13
2) CN102	D4	2) Q2	A10
		Q3	A8
CN925	*B13	Q4	A8
CN926	*B11	Q5	A5
CN927	*B1	Q6	A6
CN928	*B8	Q7	A2
CN929	*B7	Q8	A2
CN930	*B5	Q9	A1
CN931	*B4	Q10	A2
CN932	*C12	Q11	A7
CN933	*C6	Q12	B9
CN934	*C3	Q13	B9
CN958	D4	Q14	D12
CN961	*B2		
CN962	C14	RB1	C12
CN963	D11	RB2	C9
CP1	C13	RV1	A7
CP2	C13	RV2	A9
CP3	C14		
CP4	C14	TP1	B12
CP5	C14	TP2	C12
CP6	C5	TP3	A13
CP7	C6	TP4	A6
CP8	C6	TP5	A3
CP9	C8	2) TP6	D14
CP10	C8		
CP11	C1		
CP12	C2		
CP13	C3		
CP14	C4		
CP15	C4		
1) D1	A9		
1) E1	A5		
1) E2	B12		
1) IC1	C5		
1) IC2	C7		
1) IC3	C7		
1) IC4	C8		
1) IC5	C1		
1) IC6	C2		
1) IC7	C3		
1) IC8	C4		
1) IC9	A11		
IC10	A14		
IC11	B6		

*: B SIDE
1) FOR SUFFIX-11
2) FOR SUFFIX-12

VIO-15 (1-639-126-13)

DVR-2000
DVR-2100

CN100	A12	JP1	A5
		JP2	D4
CN925	*B13		
CN926	*B11	Q1	B14
CN927	*B1	Q2	A10
CN928	*B8	Q3	B8
CN929	*B7	Q4	B8
CN930	*B5	Q5	B5
CN931	*B4	Q6	B6
CN932	*C12	Q7	B2
CN933	*C6	Q8	B2
CN934	*C3	Q9	A1
CN958	D4	Q10	A1
CN961	*B2	Q11	A7
CN962	D14	Q12	B9
CN963	D11	Q13	B9
		Q14	D12
CP1	C13		
CP2	C13	RB1	C12
CP3	C14	RB2	C9
CP4	C14		
CP5	C14	RV1	A7
CP6	C5	RV2	A10
CP7	C5	RV3	A14
CP8	C6	RV4	A4
CP9	C8		
CP10	C8	TP1	B12
CP11	C1	TP2	C12
CP12	C2	TP3	A13
CP13	C2	TP4	A6
CP14	C4	TP5	A3
CP15	C4	TP6	D14
D1	A9		
E1	B5		
E2	B12		
IC1	C5		
IC2	C6		
IC3	C7		
IC4	C8		
IC5	C1		
IC6	C2		
IC7	C3		
IC8	C4		
IC9	A11		
IC10	A14		
IC11	A6		
IC12	A3		
IC13	C9		
IC14	C10		
IC15	C11		
IC16	C12		

*: B SIDE

VIO-16 (1-639-127-11, 12)

DVR-2000
DVR-2100

CNI1	B2	2) TP9	C1
CNI5	D1	2) TP10	C1
		2) TP11	D3
CN915	F1	2) TP12	B3
CN916	F3		
CN917	B1		
CN918	A1		
CN919	A3		
CN920	E1		
CN921	E3		
CN922	D1		
CN961	B1		
CN964	B3		
CN970	F2		
E1	E1		
E2	C3		
E3	A3		
FB1	*F2		
FB2	*F3		
FB3	*F3		
FB5	*C3		
FB6	*B3		
IC1	B2		
IC2	*C2		
IC3	*C1		
IC4	*C1		
IC5	D1		
IC6	*E1		
IC7	*E2		
IC8	*B3		
2) Q1	*B2		
Q2	*B2		
Q3	*B2		
RB1	C2		
RB2	C1		
RB3	E2		
RB4	E1		
RB5	E2		
RV1	B2		
S1	A2		
TP1	C1		
TP2	C1		
TP3	C3		
TP4	F3		
TP5	E3		
TP6	C3		
TP7	C1		
2) TP8	C2		

*: B SIDE
2) FOR SUFFIX-12

VN-03 (1-639-120-11, 12)

DVR-2000
DVR-2100

CN1	Q18	RB33	Q15	TP55	A20
CN2	Q20	RB34	Q4	TP76	Q16
CN509	A6	RB35	Q4	TP77	Q16
CN510	A18	RB36	Q12	TP78	Q15
		RB37	C25		
CP1	A13	RB38	B25	X1	P1
D1	Q4	RV1	D25		
D1	Q22				
		S1	Q22		
E1	A1				
E2	D1	TP1	H22		
E3	H1	TP2	H24		
E4	P1	TP3	D9		
E5	A12	TP4	Q6		
E6	D13	TP5	D5		
E7	H14	TP6	Q6		
E8	Q11	TP7	Q7		
E9	Q12	TP8	Q6		
E10	A25	TP9	F15		
E11	F25	TP10	G16		
E12	J25	TP11	G17		
E13	P25	TP12	Q7		
		TP16	Q8		
RB1	H24	TP23	K24		
RB2	H25	TP24	K24		
RB3	H23	TP25	K24		
RB4	J22	TP26	K20		
RB5	D6	TP27	K20		
RB6	A5	TP28	K20		
RB7	A6	TP29	P16		
RB8	A7	TP30	L24		
RB9	D14	TP31	Q5		
RB10	D15	TP32	Q5		
RB11	D17	TP33	G13		
RB12	D18	TP34	G13		
RB13	F13	TP35	H13		
RB14	A10	TP36	H13		
RB15	A12	TP37	J13		
RB16	D9	TP38	J13		
RB17	D7	TP39	J13		
RB18	A9	TP40	F13		
RB19	A21	TP41	F10		
RB20	A22	TP42	E10		
RB21	A24	TP43	E10		
RB22	A17	TP44	E10		
RB23	A18	TP45	D7		
RB24	A20	TP46	D7		
RB25	M1	TP47	M10		
RB26	M4	TP48	F1		
RB27	D3	TP49	F1		
RB28	A2	TP50	F1		
RB29	C2	TP51	F1		
RB30	Q20	TP52	F1		
RB31	P15	TP53	E4		
RB32	M14	TP54	A19		

IC No. on this board shows its address.

RF-23 (1/3) BOARD CARD RACK

CARD RACK **RF-23 (1/3) BOARD**

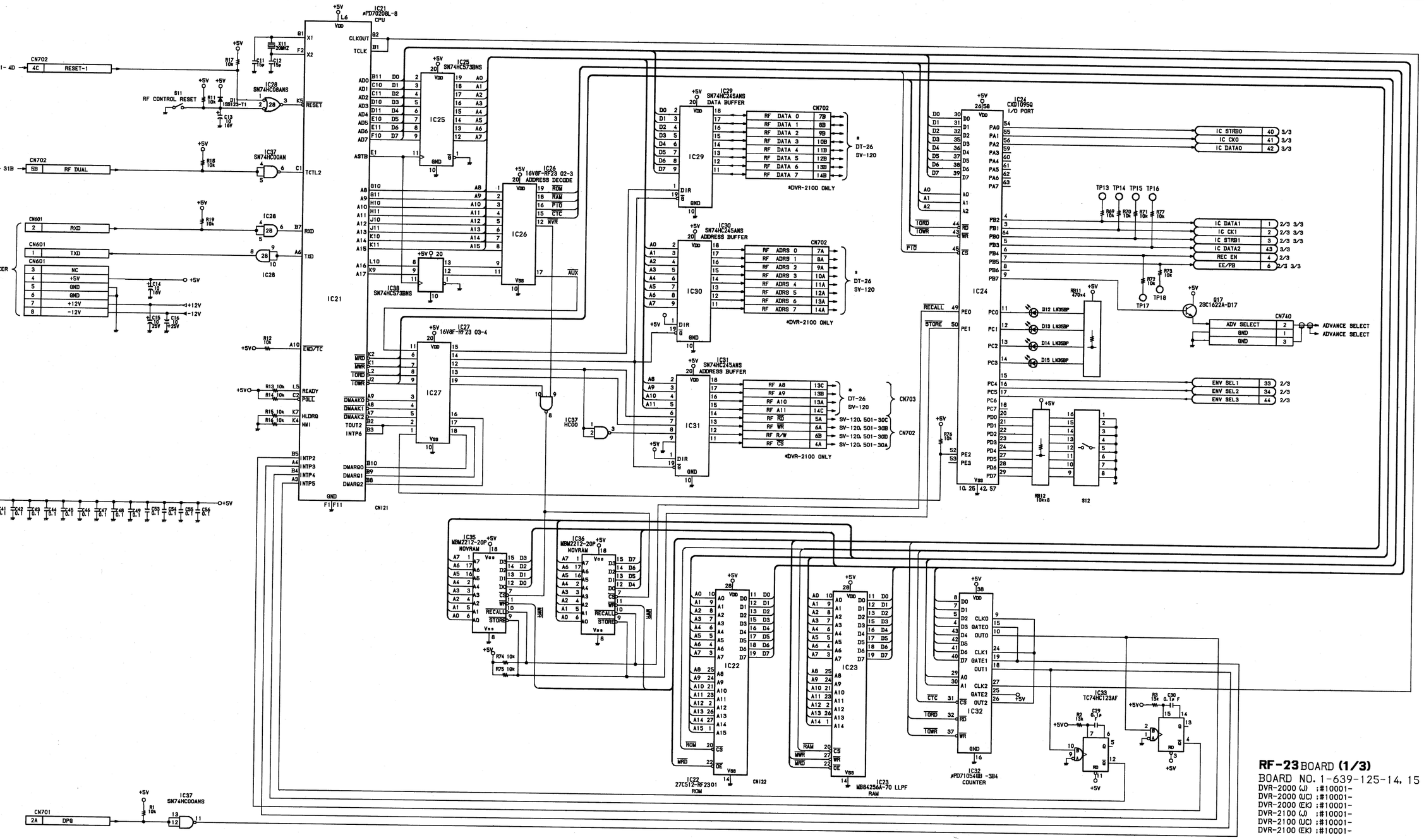

RF-23 BOARD **(1/3)**

BOARD NO. 1-639-125-14, 15

DVR-2000 (J) :#10001-
DVR-2000 (UC) :#10001-
DVR-2000 (EK) :#10001-
DVR-2100 (J) :#10001-
DVR-2100 (UC) :#10001-
DVR-2100 (EK) :#10001-

19-17 (b)

RF-23 (1/3) BOARD CARD RACK
CARD RACK RF-23 (1/3) BOARD

RF-23 BOARD (1/3)

RF REC/PB Processor

NOTE

ADDRESS	MARK	CHANGED INFORMATION	SERIAL No.
D1	#1	D11 IS CHANGED 1SS55 → 1SS123	DVR-2000 LJ :#10201- DVR-2000 UC :#10301- DVR-2000 EX :#10401- DVR-2100 LJ :#11001- DVR-2100 UC :#11101- DVR-2100 EX :#11101-

DVR-2000
J ; S/N 10001 and higher
UC ; S/N 10001 and higher
EK ; S/N 10001 and higher
DVR-2100
J ; S/N 10001 and higher
UC ; S/N 10001 and higher
EK ; S/N 10001 and higher

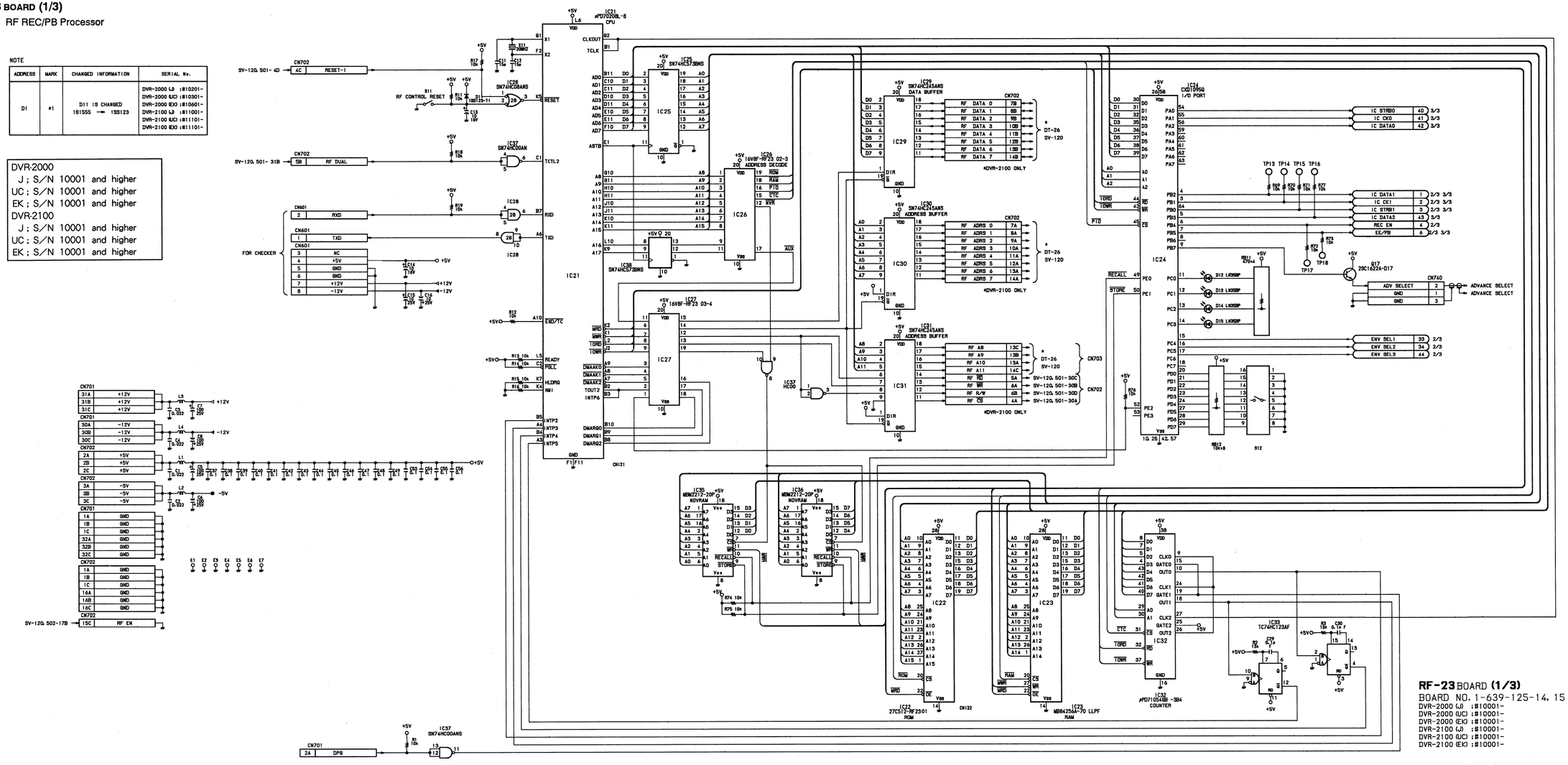

RF-23 BOARD **(1/3)**
BOARD NO. 1-639-125-14, 15
DVR-2000 (J) :#10001-
DVR-2000 (UC) :#10001-
DVR-2000 (EK) :#10001-
DVR-2100 (J) :#10001-
DVR-2100 (UC) :#10001-
DVR-2100 (EK) :#10001-

19-17 (b)

RF-23 (1/3) BOARD CARD RACK
CARD RACK RF-23 (1/3) BOARD

RF-23 BOARD (1/3)

RF REC/PB Processor

NOTE			
ADDRESS	MARK	CHANGED INFORMATION	SERIAL NO.
D1	●1	D11 IS CHANGED. 1SI555 → 1SS123	DVR-2000 (UC) :#10301- DVR-2000 (EK) :#10601-

DVR-2000
J ; S/N 10001 through 10199
UC ; S/N 10001 through 10599
EK ; S/N 10001 through 10999
DVR-2100
J ; S/N 10001 through 10899
UC ; S/N 10001 through 11099
EK ; S/N 10001 through 11099

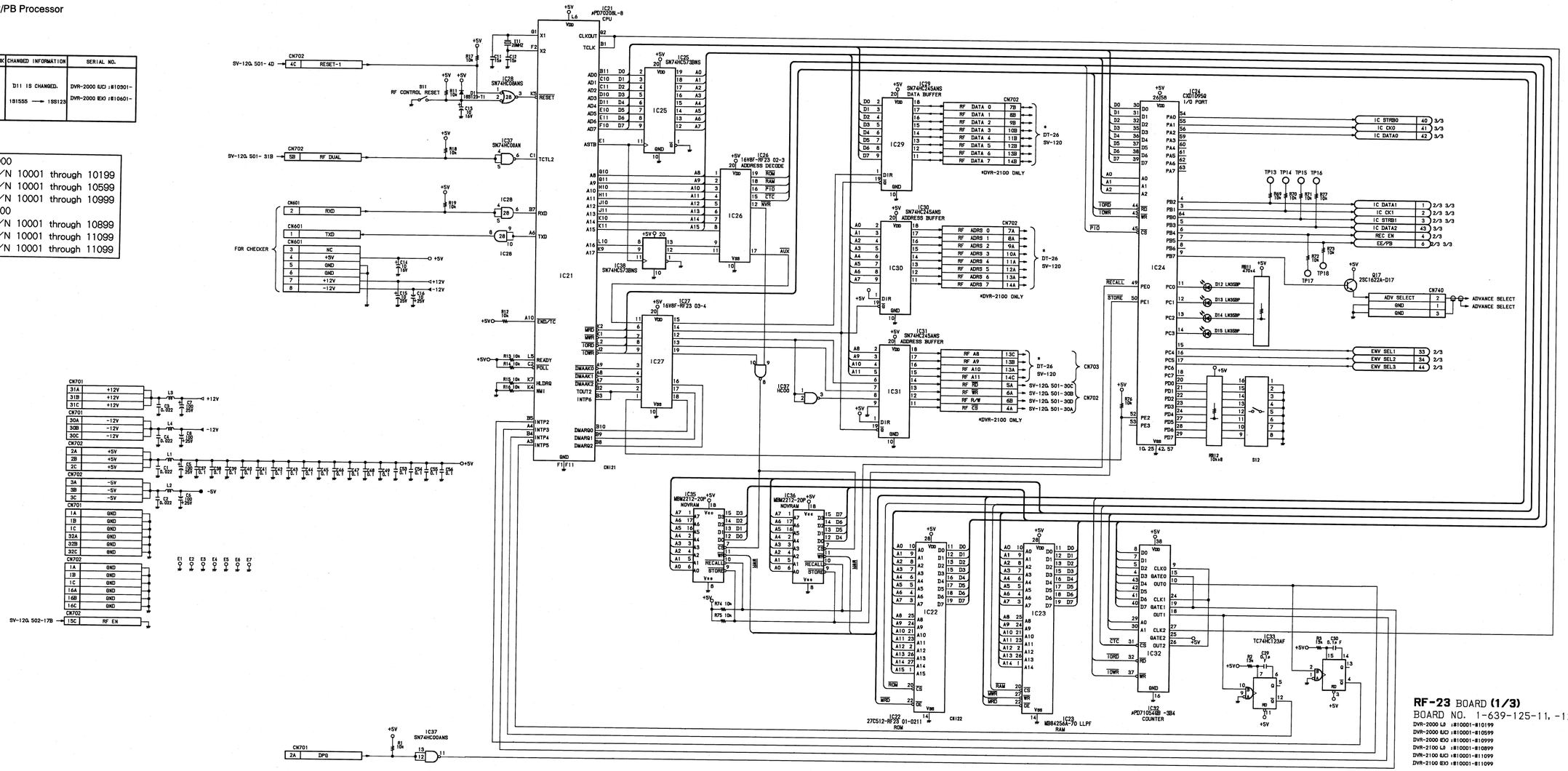

RF-23 BOARD **(1/3)**
BOARD NO. 1-639-125-11, -12, -13
DVR-2000 LB :#10001-810199
DVR-2000 (UC) :#10001-810599
DVR-2000 (EK) :#10001-810999
DVR-2100 LB :#10001-810899
DVR-2100 (UC) :#10001-811099
DVR-2100 (EK) :#10001-811099

19-17 (a)

RF-23 (2/3) BOARD CARD RACK
CARD RACK RF-23 (2/3) BOARD

RF-23 BOARD (2/3)

RF REC/PB Processor

DVR-2000	DVR-2100
J ; S/N 10001 and higher	J ; S/N 10001 and higher
UC ; S/N 10001 and higher	UC ; S/N 10001 and higher
EK ; S/N 10001 and higher	EK ; S/N 10001 and higher

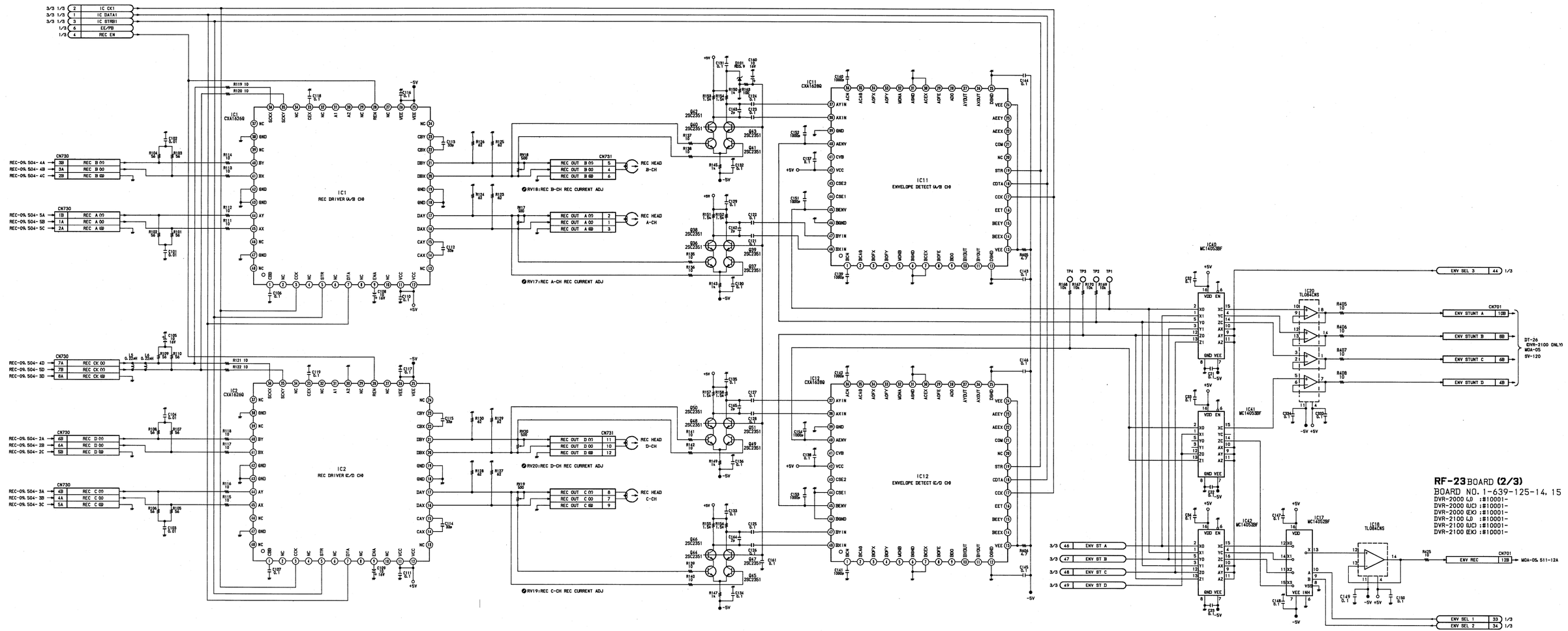

RF-23 BOARD (2/3)
BOARD NO. 1-639-125-14, 15
DVR-2000 (J) :#10001-
DVR-2000 (UC) :#10001-
DVR-2000 (EK) :#10001-
DVR-2100 (J) :#10001-
DVR-2100 (UC) :#10001-
DVR-2100 (EK) :#10001-

19-19 (b)

RF-23 (2/3) BOARD CARD RACK
CARD RACK RF-23 (2/3) BOARD

RF-23 BOARD (2/3)

RF REC/PB Processor

NOTE

MARK	CHANGED INFORMATION	SERIAL NO.
*1	C112 THRU C115 ARE CHANGED. 56 ⟶ 33	DVR-2000 (UC) :#10201- DVR-2000 (EK) :#10301-
*2	R123 THRU R130 ARE CHANGED. 51 ⟶ 62	DVR-2100 (J) :#10601- DVR-2100 (UC) :#10601-
*3	RV17 THRU RV20 ARE CHANGED. 1K ⟶ 500	DVR-2100 (EK) :#10601-
*4	C162 THRU C165 ARE CHANGED. 2.2 ⟶ 2	DVR-2000 (UC) :#10301- DVR-2000 (EK) :#10601-

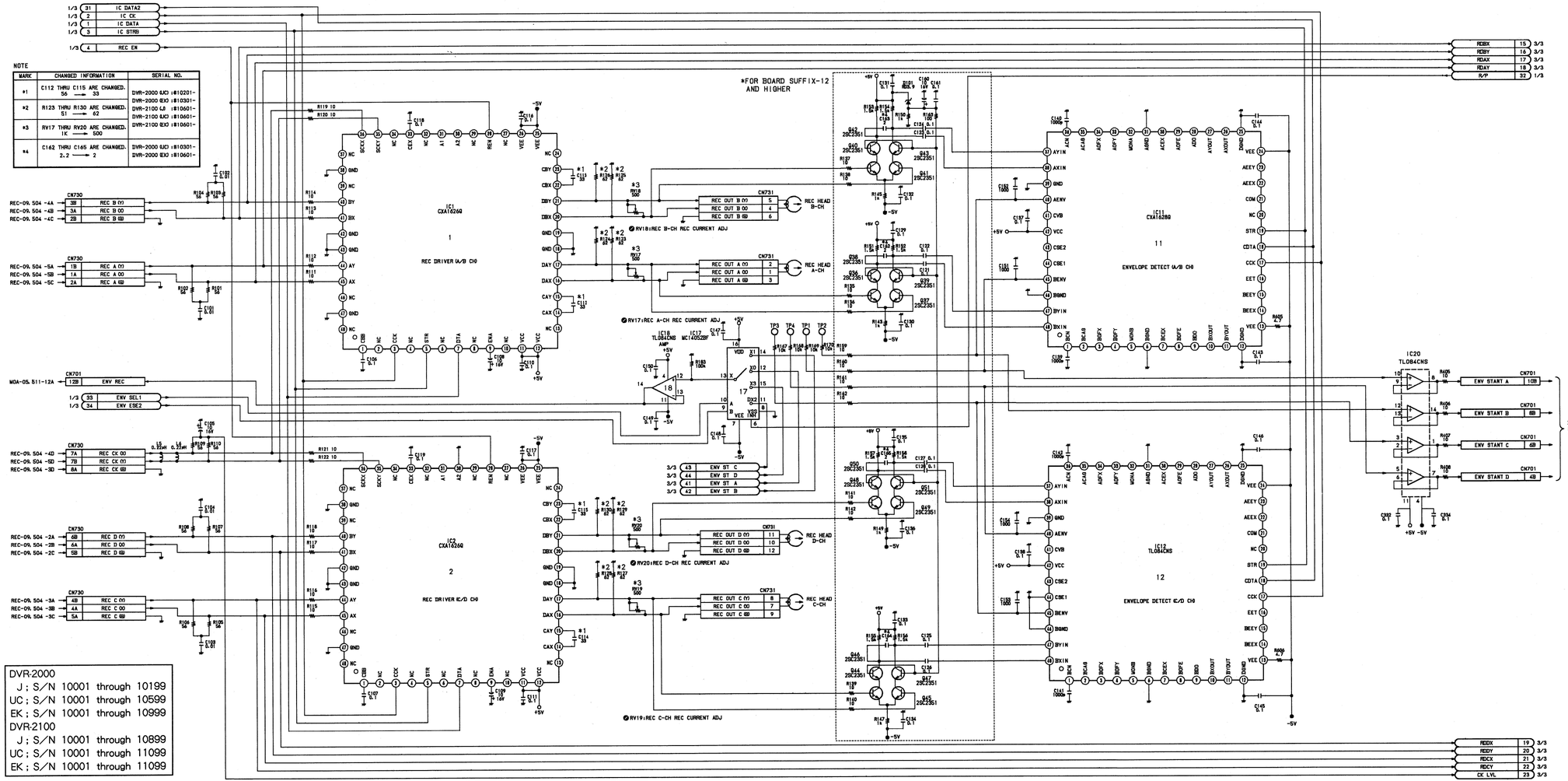

DVR-2000
J ; S/N 10001 through 10199
UC ; S/N 10001 through 10599
EK ; S/N 10001 through 10999
DVR-2100
J ; S/N 10001 through 10899
UC ; S/N 10001 through 11099
EK ; S/N 10001 through 11099

RF-23 BOARD (2/3)
BOARD NO. 1-639-125-11, -12, -13

DVR-2000 (J) :#10001-#10199
DVR-2000 (UC) :#10001-#10599
DVR-2000 (EK) :#10001-#10999
DVR-2100 (J) :#10001-#10899
DVR-2100 (UC) :#10001-#11099
DVR-2100 (EK) :#10001-#11099

19-19 (a)

CARD RACK RF-23 (3/3) BOARD RF-23 (3/3) BOARD CARD RACK

RF-23 BOARD (3/3)

RF REC/PB Processor

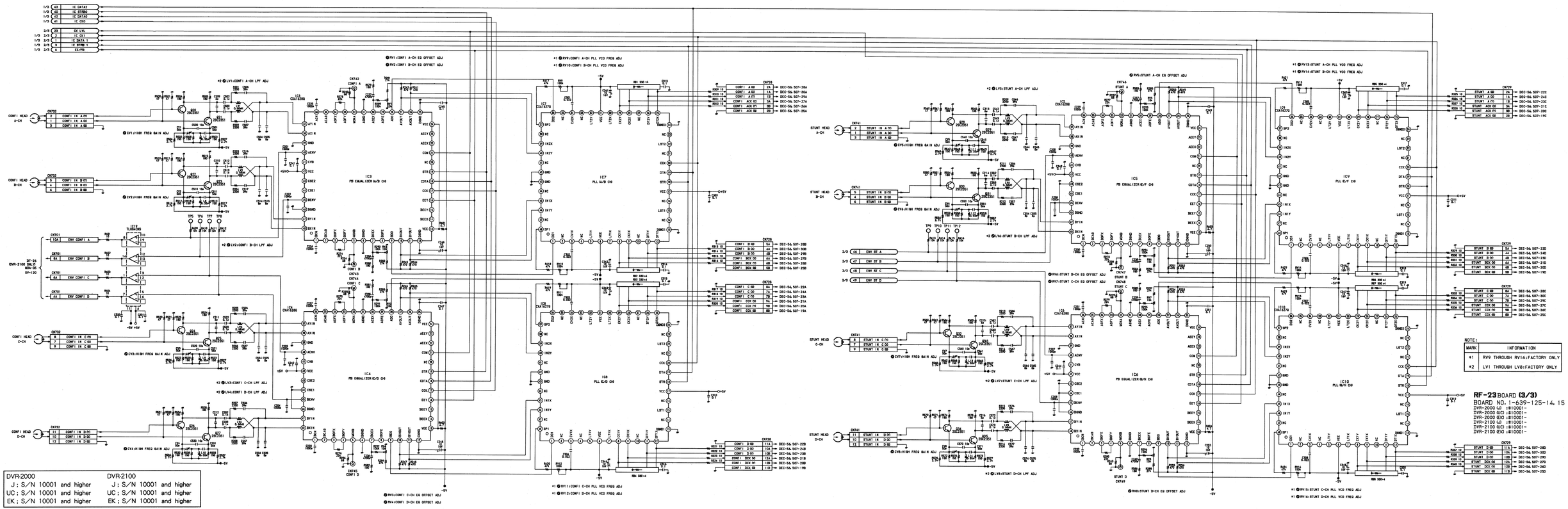
IC3 PB EQUALIZER A/B CH
IC4 PB EQUALIZER C/D CH
IC5 PB EQUALIZER E/F CH
IC6 PB EQUALIZER G/H CH
IC7 PLL A/B CH
IC8 PLL C/D CH
IC9 PLL E/F CH
IC10 PLL G/H CH
IC1 CXA3276Q
IC2 CXA3276Q
IC11 TL084CND
CN732 CONF I HEAD A-CH
CN732 CONF I HEAD B-CH
CN732 CONF I HEAD C-CH
CN732 CONF I HEAD D-CH
CN741 STUNT HEAD A-CH
CN741 STUNT HEAD B-CH
CN741 STUNT HEAD C-CH
CN741 STUNT HEAD D-CH
CN701 ENV CONF I A
CN701 ENV CONF I B
CN701 ENV CONF I C
CN701 ENV CONF I D
CN701 ENV ST A
CN701 ENV ST B
CN701 ENV ST C
CN701 ENV ST D
CN728 CONF I A 00 2A DEC-5A 507-28A
CN728 CONF I A 00 1A DEC-5A 507-30A
CN728 CONF I A 01 1B DEC-5A 507-29A
CN728 CONF I ACK 00 3A DEC-5A 507-27A
CN728 CONF I ACK 01 3B DEC-5A 507-26A
CN728 CONF I ACK 88 2B DEC-5A 507-25A
CN728 CONF I B 00 5A DEC-5A 507-28B
CN728 CONF I B 00 4A DEC-5A 507-30B
CN728 CONF I B 01 4B DEC-5A 507-29B
CN728 CONF I BCK 00 6A DEC-5A 507-27B
CN728 CONF I BCK 01 6B DEC-5A 507-26B
CN728 CONF I BCK 88 5B DEC-5A 507-25B
CN728 CONF I C 00 8A DEC-5A 507-28A
CN728 CONF I C 00 7A DEC-5A 507-24A
CN728 CONF I C 01 7B DEC-5A 507-23A
CN728 CONF I CCK 00 9A DEC-5A 507-27A
CN728 CONF I CCK 01 9B DEC-5A 507-26A
CN728 CONF I CCK 88 8B DEC-5A 507-19A
CN728 CONF I D 00 11A DEC-5A 507-28B
CN728 CONF I D 00 10A DEC-5A 507-24B
CN728 CONF I D 01 10B DEC-5A 507-23B
CN728 CONF I DCK 00 12A DEC-5A 507-27B
CN728 CONF I DCK 01 12B DEC-5A 507-26B
CN728 CONF I DCK 88 11B DEC-5A 507-19B
CN729 STUNT A 00 2A DEC-5A 507-23C
CN729 STUNT A 00 1A DEC-5A 507-24C
CN729 STUNT A 01 1B DEC-5A 507-23C
CN729 STUNT ACK 00 3A DEC-5A 507-21C
CN729 STUNT ACK 01 3B DEC-5A 507-20C
CN729 STUNT ACK 88 2B DEC-5A 507-19C
CN729 STUNT B 00 5A DEC-5A 507-23D
CN729 STUNT B 00 4A DEC-5A 507-24D
CN729 STUNT B 01 4B DEC-5A 507-23D
CN729 STUNT BCK 00 6A DEC-5A 507-21D
CN729 STUNT BCK 88 5B DEC-5A 507-19D
CN729 STUNT C 00 8A DEC-5A 507-23E
CN729 STUNT C 00 7A DEC-5A 507-24E
CN729 STUNT C 01 7B DEC-5A 507-23E
CN729 STUNT CCK 00 9A DEC-5A 507-21E
CN729 STUNT CCK 01 9B DEC-5A 507-20E
CN729 STUNT CCK 88 8B DEC-5A 507-19E
CN729 STUNT D 00 11A DEC-5A 507-23D
CN729 STUNT D 00 10A DEC-5A 507-24D
CN729 STUNT D 01 10B DEC-5A 507-23D
CN729 STUNT DCK 00 12A DEC-5A 507-21D
CN729 STUNT DCK 01 12B DEC-5A 507-20D
CN729 STUNT DCK 88 11B DEC-5A 507-19D
CN732 CONF I IN A 00
CN732 CONF I IN A 01
CN732 CONF I IN A 88
CN732 CONF I IN B 00
CN732 CONF I IN B 01
CN732 CONF I IN B 88
CN732 CONF I IN C 00
CN732 CONF I IN C 01
CN732 CONF I IN C 88
CN732 CONF I IN D 00
CN732 CONF I IN D 01
CN732 CONF I IN D 88
CN741 STUNT IN A 00
CN741 STUNT IN A 01
CN741 STUNT IN A 88
CN741 STUNT IN B 00
CN741 STUNT IN B 01
CN741 STUNT IN B 88
CN741 STUNT IN C 00
CN741 STUNT IN C 01
CN741 STUNT IN C 88
CN741 STUNT IN D 00
CN741 STUNT IN D 01
CN741 STUNT IN D 88
CN743 CONF I A
CN744 CONF I B
CN745 CONF I D
CN746 CONF I C
CN744 STUNT A
CN747 STUNT B
CN748 STUNT C
CN749 STUNT D
CV1:HIGH FREQ GAIN ADJ
CV2:HIGH FREQ GAIN ADJ
CV3:HIGH FREQ GAIN ADJ
CV4:HIGH FREQ GAIN ADJ
CV5:HIGH FREQ GAIN ADJ
CV6:HIGH FREQ GAIN ADJ
CV7:HIGH FREQ GAIN ADJ
CV8:HIGH FREQ GAIN ADJ
LV1:CONF I A-CH LPF ADJ
LV2:CONF I B-CH LPF ADJ
LV3:CONF I C-CH LPF ADJ
LV4:CONF I D-CH LPF ADJ
LV5:STUNT A-CH LPF ADJ
LV6:STUNT B-CH LPF ADJ
LV7:STUNT C-CH LPF ADJ
LV8:STUNT D-CH LPF ADJ
RV9:CONF I A-CH EQ OFFSET ADJ
RV10:CONF I B-CH EQ OFFSET ADJ
RV11:CONF I C-CH EQ OFFSET ADJ
RV12:CONF I D-CH EQ OFFSET ADJ
RV13:STUNT A-CH EQ OFFSET ADJ
RV14:STUNT B-CH EQ OFFSET ADJ
RV15:STUNT C-CH EQ OFFSET ADJ
RV16:STUNT D-CH EQ OFFSET ADJ
RV9:CONF I A-CH PLL VCO FREQ ADJ
RV10:CONF I B-CH PLL VCO FREQ ADJ
RV11:CONF I C-CH PLL VCO FREQ ADJ
RV12:CONF I D-CH PLL VCO FREQ ADJ
RV13:STUNT A-CH PLL VCO FREQ ADJ
RV14:STUNT B-CH PLL VCO FREQ ADJ
RV15:STUNT C-CH PLL VCO FREQ ADJ
RV16:STUNT D-CH PLL VCO FREQ ADJ
DT-D6 DVR-2100 ONLY MDX-120 SV-120
ENV ST A
ENV ST B
ENV ST C
ENV ST D
+5V
-5V
+15V
-15V
+15VD
-15VD
+15VA
-15VA
+15VC
-15VC
+15VE
-15VE
+15VG
-15VG
+15VI
-15VI
+15VK
-15VK
+15VM
-15VM
+15VO
-15VO
+15VQ
-15VQ
+15VS
-15VS
+15VU
-15VU
+15VW
-15VW
+15VY
-15VY
+15VAA
-15VAA
+15VCC
-15VCC
+15VEE
-15VEE
+15VGG
-15VGG
+15VII
-15VII
+15VKK
-15VKK
+15VMM
-15VMM
+15VOO
-15VOO
+15VQQ
-15VQQ
+15VSS
-15VSS
+15VUU
-15VUU
+15VWW
-15VWW
+15VYY
-15VYY
+15VAAA
-15VAAA
+15VCCC
-15VCCC
+15VEEE
-15VEEE
+15VGGG
-15VGGG
+15VIII
-15VIII
+15VKKK
-15VKKK
+15VMMM
-15VMMM
+15VOOO
-15VOOO
+15VQQQ
-15VQQQ
+15VSSS
-15VSSS
+15VUUU
-15VUUU
+15VWWW
-15VWWW
+15VYYY
-15VYYY
+15VAAAA
-15VAAAA
+15VCCCC
-15VCCCC
+15VEEEE
-15VEEEE
+15VGGGG
-15VGGGG
+15VIIII
-15VIIII
+15VKKKK
-15VKKKK
+15VMMMM
-15VMMMM
+15VOOOO
-15VOOOO
+15VQQQQ
-15VQQQQ
+15VSSSS
-15VSSSS
+15VUUUU
-15VUUUU
+15VWWWW
-15VWWWW
+15VYYYY
-15VYYYY
+15VAAAAA
-15VAAAAA
+15VCCCCC
-15VCCCCC
+15VEEEEE
-15VEEEEE
+15VGGGGG
-15VGGGGG
+15VIIIII
-15VIIIII
+15VKKKKK
-15VKKKKK
+15VMMMMM
-15VMMMMM
+15VOOOOO
-15VOOOOO
+15VQQQQQ
-15VQQQQQ
+15VSSSSS
-15VSSSSS
+15VUUUUU
-15VUUUUU
+15VWWWWW
-15VWWWWW
+15VYYYYY
-15VYYYYY
+15VAAAAAA
-15VAAAAAA
+15VCCCCCC
-15VCCCCCC
+15VEEEEEE
-15VEEEEEE
+15VGGGGGG
-15VGGGGGG
+15VIIIIII
-15VIIIIII
+15VKKKKKK
-15VKKKKKK
+15VMMMMMM
-15VMMMMMM
+15VOOOOOO
-15VOOOOOO
+15VQQQQQQ
-15VQQQQQQ
+15VSSSSSS
-15VSSSSSS
+15VUUUUUU
-15VUUUUUU
+15VWWWWWW
-15VWWWWWW
+15VYYYYYY
-15VYYYYYY
+15VAAAAAAA
-15VAAAAAAA
+15VCCCCCCC
-15VCCCCCCC
+15VEEEEEEE
-15VEEEEEEE
+15VGGGGGGG
-15VGGGGGGG
+15VIIIIIII
-15VIIIIIII
+15VKKKKKKK
-15VKKKKKKK
+15VMMMMMMM
-15VMMMMMMM
+15VOOOOOOO
-15VOOOOOOO
+15VQQQQQQQ
-15VQQQQQQQ
+15VSSSSSSS
-15VSSSSSSS
+15VUUUUUUU
-15VUUUUUUU
+15VWWWWWWW
-15VWWWWWWW
+15VYYYYYYY
-15VYYYYYYY
+15VAAAAAAAA
-15VAAAAAAAA
+15VCCCCCCCC
-15VCCCCCCCC
+15VEEEEEEEE
-15VEEEEEEEE
+15VGGGGGGGG
-15VGGGGGGGG
+15VIIIIIIII
-15VIIIIIIII
+15VKKKKKKKK
-15VKKKKKKKK
+15VMMMMMMMM
-15VMMMMMMMM
+15VOOOOOOOO
-15VOOOOOOOO
+15VQQQQQQQQ
-15VQQQQQQQQ
+15VSSSSSSSS
-15VSSSSSSSS
+15VUUUUUUUU
-15VUUUUUUUU
+15VWWWWWWWW
-15VWWWWWWWW
+15VYYYYYYYY
-15VYYYYYYYY
+15VAAAAAAAAA
-15VAAAAAAAAA
+15VCCCCCCCCC
-15VCCCCCCCCC
+15VEEEEEEEEE
-15VEEEEEEEEE
+15VGGGGGGGGG
-15VGGGGGGGGG
+15VIIIIIIIII
-15VIIIIIIIII
+15VKKKKKKKKK
-15VKKKKKKKKK
+15VMMMMMMMMM
-15VMMMMMMMMM
+15VOOOOOOOOO
-15VOOOOOOOOO
+15VQQQQQQQQQ
-15VQQQQQQQQQ
+15VSSSSSSSSS
-15VSSSSSSSSS
+15VUUUUUUUUU
-15VUUUUUUUUU
+15VWWWWWWWWW
-15VWWWWWWWWW
+15VYYYYYYYYY
-15VYYYYYYYYY
+15VAAAAAAAAAA
-15VAAAAAAAAAA
+15VCCCCCCCCCC
-15VCCCCCCCCCC
+15VEEEEEEEEEE
-15VEEEEEEEEEE
+15VGGGGGGGGGG
-15VGGGGGGGGGG
+15VIIIIIIIIII
-15VIIIIIIIIII
+15VKKKKKKKKKK
-15VKKKKKKKKKK
+15VMMMMMMMMMM
-15VMMMMMMMMMM
+15VOOOOOOOOOO
-15VOOOOOOOOOO
+15VQQQQQQQQQQ
-15VQQQQQQQQQQ
+15VSSSSSSSSSS
-15VSSSSSSSSSS
+15VUUUUUUUUUU
-15VUUUUUUUUUU
+15VWWWWWWWWWW
-15VWWWWWWWWWW
+15VYYYYYYYYYY
-15VYYYYYYYYYY
+15VAAAAAAAAAAA
-15VAAAAAAAAAAA
+15VCCCCCCCCCCC
-15VCCCCCCCCCCC
+15VEEEEEEEEEEE
-15VEEEEEEEEEEE
+15VGGGGGGGGGGG
-15VGGGGGGGGGGG
+15VIIIIIIIIIII
-15VIIIIIIIIIII
+15VKKKKKKKKKKK
-15VKKKKKKKKKKK
+15VMMMMMMMMMMM
-15VMMMMMMMMMMM
+15VOOOOOOOOOOO
-15VOOOOOOOOOOO
+15VQQQQQQQQQQQ
-15VQQQQQQQQQQQ
+15VSSSSSSSSSSS
-15VSSSSSSSSSSS
+15VUUUUUUUUUUU
-15VUUUUUUUUUUU
+15VWWWWWWWWWWW
-15VWWWWWWWWWWW
+15VYYYYYYYYYYY
-15VYYYYYYYYYYY
+15VAAAAAAAAAAAA
-15VAAAAAAAAAAAA
+15VCCCCCCCCCCCC
-15VCCCCCCCCCCCC
+15VEEEEEEEEEEEE
-15VEEEEEEEEEEEE
+15VGGGGGGGGGGGG
-15VGGGGGGGGGGGG
+15VIIIIIIIIIIII
-15VIIIIIIIIIIII
+15VKKKKKKKKKKKK
-15VKKKKKKKKKKKK
+15VMMMMMMMMMMMM
-15VMMMMMMMMMMMM
+15VOOOOOOOOOOOO
-15VOOOOOOOOOOOO
+15VQQQQQQQQQQQQ
-15VQQQQQQQQQQQQ
+15VSSSSSSSSSSSS
-15VSSSSSSSSSSSS
+15VUUUUUUUUUUUU
-15VUUUUUUUUUUUU
+15VWWWWWWWWWWWW
-15VWWWWWWWWWWWW
+15VYYYYYYYYYYYY
-15VYYYYYYYYYYYY
+15VAAAAAAAAAAAAA
-15VAAAAAAAAAAAAA
+15VCCCCCCCCCCCCC
-15VCCCCCCCCCCCCC
+15VEEEEEEEEEEEEE
-15VEEEEEEEEEEEEE
+15VGGGGGGGGGGGGG
-15VGGGGGGGGGGGGG
+15VIIIIIIIIIIIII
-15VIIIIIIIIIIIII
+15VKKKKKKKKKKKKK
-15VKKKKKKKKKKKKK
+15VMMMMMMMMMMMMM
-15VMMMMMMMMMMMMM
+15VOOOOOOOOOOOOO
-15VOOOOOOOOOOOOO
+15VQQQQQQQQQQQQQ
-15VQQQQQQQQQQQQQ
+15VSSSSSSSSSSSSS
-15VSSSSSSSSSSSSS
+15VUUUUUUUUUUUUU
-15VUUUUUUUUUUUUU
+15VWWWWWWWWWWWWW
-15VWWWWWWWWWWWWW
+15VYYYYYYYYYYYYY
-15VYYYYYYYYYYYYY
+15VAAAAAAAAAAAAAA
-15VAAAAAAAAAAAAAA
+15VCCCCCCCCCCCCCC
-15VCCCCCCCCCCCCCC
+15VEEEEEEEEEEEEEE
-15VEEEEEEEEEEEEEE
+15VGGGGGGGGGGGGGG
-15VGGGGGGGGGGGGGG
+15VIIIIIIIIIIIIII
-15VIIIIIIIIIIIIII
+15VKKKKKKKKKKKKKK
-15VKKKKKKKKKKKKKK
+15VMMMMMMMMMMMMMM
-15VMMMMMMMMMMMMMM
+15VOOOOOOOOOOOOOO
-15VOOOOOOOOOOOOOO
+15VQQQQQQQQQQQQQQ
-15VQQQQQQQQQQQQQQ
+15VSSSSSSSSSSSSSS
-15VSSSSSSSSSSSSSS
+15VUUUUUUUUUUUUUU
-15VUUUUUUUUUUUUUU
+15VWWWWWWWWWWWWWW
-15VWWWWWWWWWWWWWW
+15VYYYYYYYYYYYYYY
-15VYYYYYYYYYYYYYY
+15VAAAAAAAAAAAAAAA
-15VAAAAAAAAAAAAAAA
+15VCCCCCCCCCCCCCCC
-15VCCCCCCCCCCCCCCC
+15VEEEEEEEEEEEEEEE
-15VEEEEEEEEEEEEEEE
+15VGGGGGGGGGGGGGGG
-15VGGGGGGGGGGGGGGG
+15VIIIIIIIIIIIIIII
-15VIIIIIIIIIIIIIII
+15VKKKKKKKKKKKKKKK
-15VKKKKKKKKKKKKKKK
+15VMMMMMMMMMMMMMMM
-15VMMMMMMMMMMMMMMM
+15VOOOOOOOOOOOOOOO
-15VOOOOOOOOOOOOOOO
+15VQQQQQQQQQQQQQQQ
-15VQQQQQQQQQQQQQQQ
+15VSSSSSSSSSSSSSSS
-15VSSSSSSSSSSSSSSS
+15VUUUUUUUUUUUUUUU
-15VUUUUUUUUUUUUUUU
+15VWWWWWWWWWWWWWWW
-15VWWWWWWWWWWWWWWW
+15VYYYYYYYYYYYYYYY
-15VYYYYYYYYYYYYYYY
+15VAAAAAAAAAAAAAAAA
-15VAAAAAAAAAAAAAAAA
+15VCCCCCCCCCCCCCCCC
-15VCCCCCCCCCCCCCCCC
+15VEEEEEEEEEEEEEEEE
-15VEEEEEEEEEEEEEEEE
+15VGGGGGGGGGGGGGGGG
-15VGGGGGGGGGGGGGGGG
+15VIIIIIIIIIIIIIIII
-15VIIIIIIIIIIIIIIII
+15VKKKKKKKKKKKKKKKK
-15VKKKKKKKKKKKKKKKK
+15VMMMMMMMMMMMMMMMM
-15VMMMMMMMMMMMMMMMM
+15VOOOOOOOOOOOOOOOO
-15VOOOOOOOOOOOOOOOO
+15VQQQQQQQQQQQQQQQQ
-15VQQQQQQQQQQQQQQQQ
+15VSSSSSSSSSSSSSSSS
-15VSSSSSSSSSSSSSSSS
+15VUUUUUUUUUUUUUUUU
-15VUUUUUUUUUUUUUUUU
+15VWWWWWWWWWWWWWWWW
-15VWWWWWWWWWWWWWWWW
+15VYYYYYYYYYYYYYYYY
-15VYYYYYYYYYYYYYYYY
+15VAAAAAAAAAAAAAAAAA
-15VAAAAAAAAAAAAAAAAA
+15VCCCCCCCCCCCCCCCCC
-15VCCCCCCCCCCCCCCCCC
+15VEEEEEEEEEEEEEEEEE
-15VEEEEEEEEEEEEEEEEE
+15VGGGGGGGGGGGGGGGGG
-15VGGGGGGGGGGGGGGGGG
+15VIIIIIIIIIIIIIIIII
-15VIIIIIIIIIIIIIIIII
+15VKKKKKKKKKKKKKKKKK
-15VKKKKKKKKKKKKKKKKK
+15VMMMMMMMMMMMMMMMMM
-15VMMMMMMMMMMMMMMMMM
+15VOOOOOOOOOOOOOOOOO
-15VOOOOOOOOOOOOOOOOO
+15VQQQQQQQQQQQQQQQQQ
-15VQQQQQQQQQQQQQQQQQ
+15VSSSSSSSSSSSSSSSSS
-15VSSSSSSSSSSSSSSSSS
+15VUUUUUUUUUUUUUUUUU
-15VUUUUUUUUUUUUUUUUU
+15VWWWWWWWWWWWWWWWWW
-15VWWWWWWWWWWWWWWWWW
+15VYYYYYYYYYYYYYYYYY
-15VYYYYYYYYYYYYYYYYY
+15VAAAAAAAAAAAAAAAAAA
-15VAAAAAAAAAAAAAAAAAA
+15VCCCCCCCCCCCCCCCCCC
-15VCCCCCCCCCCCCCCCCCC
+15VEEEEEEEEEEEEEEEEEE
-15VEEEEEEEEEEEEEEEEEE
+15VGGGGGGGGGGGGGGGGGG
-15VGGGGGGGGGGGGGGGGGG
+15VIIIIIIIIIIIIIIIIII
-15VIIIIIIIIIIIIIIIIII
+15VKKKKKKKKKKKKKKKKKK
-15VKKKKKKKKKKKKKKKKKK
+15VMMMMMMMMMMMMMMMMMM
-15VMMMMMMMMMMMMMMMMMM
+15VOOOOOOOOOOOOOOOOOO
-15VOOOOOOOOOOOOOOOOOO
+15VQQQQQQQQQQQQQQQQQQ
-15VQQQQQQQQQQQQQQQQQQ
+15VSSSSSSSSSSSSSSSSSS
-15VSSSSSSSSSSSSSSSSSS
+15VUUUUUUUUUUUUUUUUUU
-15VUUUUUUUUUUUUUUUUUU
+15VWWWWWWWWWWWWWWWWWW
-15VWWWWWWWWWWWWWWWWWW
+15VYYYYYYYYYYYYYYYYYY
-15VYYYYYYYYYYYYYYYYYY
+15VAAAAAAAAAAAAAAAAAAA
-15VAAAAAAAAAAAAAAAAAAA
+15VCCCCCCCCCCCCCCCCCCC
-15VCCCCCCCCCCCCCCCCCCC
+15VEEEEEEEEEEEEEEEEEEE
-15VEEEEEEEEEEEEEEEEEEE
+15VGGGGGGGGGGGGGGGGGGG
-15VGGGGGGGGGGGGGGGGGGG
+15VIIIIIIIIIIIIIIIIIII
-15VIIIIIIIIIIIIIIIIIII
+15VKKKKKKKKKKKKKKKKKKK
-15VKKKKKKKKKKKKKKKKKKK
+15VMMMMMMMMMMMMMMMMMMM
-15VMMMMMMMMMMMMMMMMMMM
+15VOOOOOOOOOOOOOOOOOOO
-15VOOOOOOOOOOOOOOOOOOO
+15VQQQQQQQQQQQQQQQQQQQ
-15VQQQQQQQQQQQQQQQQQQQ
+15VSSSSSSSSSSSSSSSSSSS
-15VSSSSSSSSSSSSSSSSSSS
+15VUUUUUUUUUUUUUUUUUUU
-15VUUUUUUUUUUUUUUUUUUU
+15VWWWWWWWWWWWWWWWWWWW
-15VWWWWWWWWWWWWWWWWWWW
+15VYYYYYYYYYYYYYYYYYYY
-15VYYYYYYYYYYYYYYYYYYY
+15VAAAAAAAAAAAAAAAAAAAA
-15VAAAAAAAAAAAAAAAAAAAA
+15VCCCCCCCCCCCCCCCCCCCC
-15VCCCCCCCCCCCCCCCCCCCC
+15VEEEEEEEEEEEEEEEEEEEE
-15VEEEEEEEEEEEEEEEEEEEE
+15VGGGGGGGGGGGGGGGGGGGG
-15VGGGGGGGGGGGGGGGGGGGG
+15VIIIIIIIIIIIIIIIIIIII
-15VIIIIIIIIIIIIIIIIIIII
+15VKKKKKKKKKKKKKKKKKKKK
-15VKKKKKKKKKKKKKKKKKKKK
+15VMMMMMMMMMMMMMMMMMMMM
-15VMMMMMMMMMMMMMMMMMMMM
+15VOOOOOOOOOOOOOOOOOOOO
-15VOOOOOOOOOOOOOOOOOOOO
+15VQQQQQQQQQQQQQQQQQQQQ
-15VQQQQQQQQQQQQQQQQQQQQ
+15VSSSSSSSSSSSSSSSSSSSS
-15VSSSSSSSSSSSSSSSSSSSS
+15VUUUUUUUUUUUUUUUUUUUU
-15VUUUUUUUUUUUUUUUUUUUU
+15VWWWWWWWWWWWWWWWWWWWW
-15VWWWWWWWWWWWWWWWWWWWW
+15VYYYYYYYYYYYYYYYYYYYY
-15VYYYYYYYYYYYYYYYYYYYY
+15VAAAAAAAAAAAAAAAAAAAAA
-15VAAAAAAAAAAAAAAAAAAAAA
+15VCCCCCCCCCCCCCCCCCCCCC
-15VCCCCCCCCCCCCCCCCCCCCC
+15VEEEEEEEEEEEEEEEEEEEEE
-15VEEEEEEEEEEEEEEEEEEEEE
+15VGGGGGGGGGGGGGGGGGGGGG
-15VGGGGGGGGGGGGGGGGGGGGG
+15VIIIIIIIIIIIIIIIIIIIII
-15VIIIIIIIIIIIIIIIIIIIII
+15VKKKKKKKKKKKKKKKKKKKKK
-15VKKKKKKKKKKKKKKKKKKKKK
+15VMMMMMMMMMMMMMMMMMMMMM
-15VMMMMMMMMMMMMMMMMMMMMM
+15VOOOOOOOOOOOOOOOOOOOOO
-15VOOOOOOOOOOOOOOOOOOOOO
+15VQQQQQQQQQQQQQQQQQQQQQ
-15VQQQQQQQQQQQQQQQQQQQQQ
+15VSSSSSSSSSSSSSSSSSSSSS
-15VSSSSSSSSSSSSSSSSSSSSS
+15VUUUUUUUUUUUUUUUUUUUUU
-15VUUUUUUUUUUUUUUUUUUUUU
+15VWWWWWWWWWWWWWWWWWWWWW
-15VWWWWWWWWWWWWWWWWWWWWW
+15VYYYYYYYYYYYYYYYYYYYYY
-15VYYYYYYYYYYYYYYYYYYYYY
+15VAAAAAAAAAAAAAAAAAAAAAA
-15VAAAAAAAAAAAAAAAAAAAAAA
+15VCCCCCCCCCCCCCCCCCCCCCC
-15VCCCCCCCCCCCCCCCCCCCCCC
+15VEEEEEEEEEEEEEEEEEEEEEE
-15VEEEEEEEEEEEEEEEEEEEEEE
+15VGGGGGGGGGGGGGGGGGGGGGG
-15VGGGGGGGGGGGGGGGGGGGGGG
+15VIIIIIIIIIIIIIIIIIIIIII
-15VIIIIIIIIIIIIIIIIIIIIII
+15VKKKKKKKKKKKKKKKKKKKKKK
-15VKKKKKKKKKKKKKKKKKKKKKK
+15VMMMMMMMMMMMMMMMMMMMMMM
-15VMMMMMMMMMMMMMMMMMMMMMM
+15VOOOOOOOOOOOOOOOOOOOOOO
-15VOOOOOOOOOOOOOOOOOOOOOO
+15VQQQQQQQQQQQQQQQQQQQQQQ
-15VQQQQQQQQQQQQQQQQQQQQQQ
+15VSSSSSSSSSSSSSSSSSSSSSS
-15VSSSSSSSSSSSSSSSSSSSSSS
+15VUUUUUUUUUUUUUUUUUUUUUU
-15VUUUUUUUUUUUUUUUUUUUUUU
+15VWWWWWWWWWWWWWWWWWWWWWW
-15VWWWWWWWWWWWWWWWWWWWWWW
+15VYYYYYYYYYYYYYYYYYYYYYY
-15VYYYYYYYYYYYYYYYYYYYYYY
+15VAAAAAAAAAAAAAAAAAAAAAAA
-15VAAAAAAAAAAAAAAAAAAAAAAA
+15VCCCCCCCCCCCCCCCCCCCCCCC
-15VCCCCCCCCCCCCCCCCCCCCCCC
+15VEEEEEEEEEEEEEEEEEEEEEEE
-15VEEEEEEEEEEEEEEEEEEEEEEE
+15VGGGGGGGGGGGGGGGGGGGGGGG
-15VGGGGGGGGGGGGGGGGGGGGGGG
+15VIIIIIIIIIIIIIIIIIIIIIII
-15VIIIIIIIIIIIIIIIIIIIIIII
+15VKKKKKKKKKKKKKKKKKKKKKKK
-15VKKKKKKKKKKKKKKKKKKKKKKK
+15VMMMMMMMMMMMMMMMMMMMMMMM
-15VMMMMMMMMMMMMMMMMMMMMMMM
+15VOOOOOOOOOOOOOOOOOOOOOOO
-15VOOOOOOOOOOOOOOOOOOOOOOO
+15VQQQQQQQQQQQQQQQQQQQQQQQ
-15VQQQQQQQQQQQQQQQQQQQQQQQ
+15VSSSSSSSSSSSSSSSSSSSSSSS
-15VSSSSSSSSSSSSSSSSSSSSSSS
+15VUUUUUUUUUUUUUUUUUUUUUUU
-15VUUUUUUUUUUUUUUUUUUUUUUU
+15VWWWWWWWWWWWWWWWWWWWWWWW
-15VWWWWWWWWWWWWWWWWWWWWWWW
+15VYYYYYYYYYYYYYYYYYYYYYYY
-15VYYYYYYYYYYYYYYYYYYYYYYY
+15VAAAAAAAAAAAAAAAAAAAAAAAA
-15VAAAAAAAAAAAAAAAAAAAAAAAA
+15VCCCCCCCCCCCCCCCCCCCCCCCC
-15VCCCCCCCCCCCCCCCCCCCCCCCC
+15VEEEEEEEEEEEEEEEEEEEEEEEE
-15VEEEEEEEEEEEEEEEEEEEEEEEE
+15VGGGGGGGGGGGGGGGGGGGGGGGG
-15VGGGGGGGGGGGGGGGGGGGGGGGG
+15VIIIIIIIIIIIIIIIIIIIIIIII
-15VIIIIIIIIIIIIIIIIIIIIIIII
+15VKKKKKKKKKKKKKKKKKKKKKKKK
-15VKKKKKKKKKKKKKKKKKKKKKKKK
+15VMMMMMMMMMMMMMMMMMMMMMMMM
-15VMMMMMMMMMMMMMMMMMMMMMMMM
+15VOOOOOOOOOOOOOOOOOOOOOOOO
-15VOOOOOOOOOOOOOOOOOOOOOOOO
+15VQQQQQQQQQQQQQQQQQQQQQQQQ
-15VQQQQQQQQQQQQQQQQQQQQQQQQ
+15VSSSSSSSSSSSSSSSSSSSSSSSS
-15VSSSSSSSSSSSSSSSSSSSSSSSS
+15VUUUUUUUUUUUUUUUUUUUUUUUU
-15VUUUUUUUUUUUUUUUUUUUUUUUU
+15VWWWWWWWWWWWWWWWWWWWWWWWW
-15VWWWWWWWWWWWWWWWWWWWWWWWW
+15VYYYYYYYYYYYYYYYYYYYYYYYY
-15VYYYYYYYYYYYYYYYYYYYYYYYY
+15VAAAAAAAAAAAAAAAAAAAAAAAAA
-15VAAAAAAAAAAAAAAAAAAAAAAAAA
+15VCCCCCCCCCCCCCCCCCCCCCCCCC
-15VCCCCCCCCCCCCCCCCCCCCCCCCC
+15VEEEEEEEEEEEEEEEEEEEEEEEEE
-15VEEEEEEEEEEEEEEEEEEEEEEEEE
+15VGGGGGGGGGGGGGGGGGGGGGGGGG
-15VGGGGGGGGGGGGGGGGGGGGGGGGG
+15VIIIIIIIIIIIIIIIIIIIIIIIII
-15VIIIIIIIIIIIIIIIIIIIIIIIII
+15VKKKKKKKKKKKKKKKKKKKKKKKKK
-15VKKKKKKKKKKKKKKKKKKKKKKKKK
+15VMMMMMMMMMMMMMMMMMMMMMMMMM
-15VMMMMMMMMMMMMMMMMMMMMMMMMM
+15VOOOOOOOOOOOOOOOOOOOOOOOOO
-15VOOOOOOOOOOOOOOOOOOOOOOOOO
+15VQQQQQQQQQQQQQQQQQQQQQQQQQ
-15VQQQQQQQQQQQQQQQQQQQQQQQQQ
+15VSSSSSSSSSSSSSSSSSSSSSSSSS
-15VSSSSSSSSSSSSSSSSSSSSSSSSS
+15VUUUUUUUUUUUUUUUUUUUUUUUUU
-15VUUUUUUUUUUUUUUUUUUUUUUUUU
+15VWWWWWWWWWWWWWWWWWWWWWWWWW
-15VWWWWWWWWWWWWWWWWWWWWWWWWW
+15VYYYYYYYYYYYYYYYYYYYYYYYYY
-15VYYYYYYYYYYYYYYYYYYYYYYYYY
+15VAAAAAAAAAAAAAAAAAAAAAAAAAA
-15VAAAAAAAAAAAAAAAAAAAAAAAAAA
+15VCCCCCCCCCCCCCCCCCCCCCCCCCC
-15VCCCCCCCCCCCCCCCCCCCCCCCCCC
+15VEEEEEEEEEEEEEEEEEEEEEEEEEE
-15VEEEEEEEEEEEEEEEEEEEEEEEEEE
+15VGGGGGGGGGGGGGGGGGGGGGGGGGG
-15VGGGGGGGGGGGGGGGGGGGGGGGGGG
+15VIIIIIIIIIIIIIIIIIIIIIIIIII
-15VIIIIIIIIIIIIIIIIIIIIIIIIII
+15VKKKKKKKKKKKKKKKKKKKKKKKKKK
-15VKKKKKKKKKKKKKKKKKKKKKKKKKK
+15VMMMMMMMMMMMMMMMMMMMMMMMMMM
-15VMMMMMMMMMMMMMMMMMMMMMMMMMM
+15VOOOOOOOOOOOOOOOOOOOOOOOOOO
-15VOOOOOOOOOOOOOOOOOOOOOOOOOO
+15VQQQQQQQQQQQQQQQQQQQQQQQQQQ
-15VQQQQQQQQQQQQQQQQQQQQQQQQQQ
+15VSSSSSSSSSSSSSSSSSSSSSSSSSS
-15VSSSSSSSSSSSSSSSSSSSSSSSSSS
+15VUUUUUUUUUUUUUUUUUUUUUUUUUU
-15VUUUUUUUUUUUUUUUUUUUUUUUUUU
+15VWWWWWWWWWWWWWWWWWWWWWWWWWW
-15VWWWWWWWWWWWWWWWWWWWWWWWWWW
+15VYYYYYYYYYYYYYYYYYYYYYYYYYY
-15VYYYYYYYYYYYYYYYYYYYYYYYYYY
+15VAAAAAAAAAAAAAAAAAAAAAAAAAAA
-15VAAAAAAAAAAAAAAAAAAAAAAAAAAA
+15VCCCCCCCCCCCCCCCCCCCCCCCCCCC
-15VCCCCCCCCCCCCCCCCCCCCCCCCCCC
+15VEEEEEEEEEEEEEEEEEEEEEEEEEEE
-15VEEEEEEEEEEEEEEEEEEEEEEEEEEE
+15VGGGGGGGGGGGGGGGGGGGGGGGGGGG
-15VGGGGGGGGGGGGGGGGGGGGGGGGGGG
+15VIIIIIIIIIIIIIIIIIIIIIIIIIII
-15VIIIIIIIIIIIIIIIIIIIIIIIIIII
+15VKKKKKKKKKKKKKKKKKKKKKKKKKKK
-15VKKKKKKKKKKKKKKKKKKKKKKKKKKK
+15VMMMMMMMMMMMMMMMMMMMMMMMMMMM
-15VMMMMMMMMMMMMMMMMMMMMMMMMMMM
+15VOOOOOOOOOOOOOOOOOOOOOOOOOOO
-15VOOOOOOOOOOOOOOOOOOOOOOOOOOO
+15VQQQQQQQQQQQQQQQQQQQQQQQQQQQ
-15VQQQQQQQQQQQQQQQQQQQQQQQQQQQ
+15VSSSSSSSSSSSSSSSSSSSSSSSSSSS
-15VSSSSSSSSSSSSSSSSSSSSSSSSSSS
+15VUUUUUUUUUUUUUUUUUUUUUUUUUUU
-15VUUUUUUUUUUUUUUUUUUUUUUUUUUU
+15VWWWWWWWWWWWWWWWWWWWWWWWWWWW
-15VWWWWWWWWWWWWWWWWWWWWWWWWWWW
+15VYYYYYYYYYYYYYYYYYYYYYYYYYYY
-15VYYYYYYYYYYYYYYYYYYYYYYYYYYY
+15VAAAAAAAAAAAAAAAAAAAAAAAAAAAA
-15VAAAAAAAAAAAAAAAAAAAAAAAAAAA
+15VCCCCCCCCCCCCCCCCCCCCCCCCCCCC
-15VCCCCCCCCCCCCCCCCCCCCCCCCCCCC
+15VEEEEEEEEEEEEEEEEEEEEEEEEEEEE
-15VEEEEEEEEEEEEEEEEEEEEEEEEEEEE
+15VGGGGGGGGGGGGGGGGGGGGGGGGGGGG
-15VGGGGGGGG

RF-23 BOARD (3/3)

RF REC/PB Processor

DVR-2000
J : S/N 10001 through 10199
UC : S/N 10001 through 10599
EK : S/N 10001 through 10999
DVR-2100
J : S/N 10001 through 10899
UC : S/N 10001 through 11099
EK : S/N 10001 through 11099

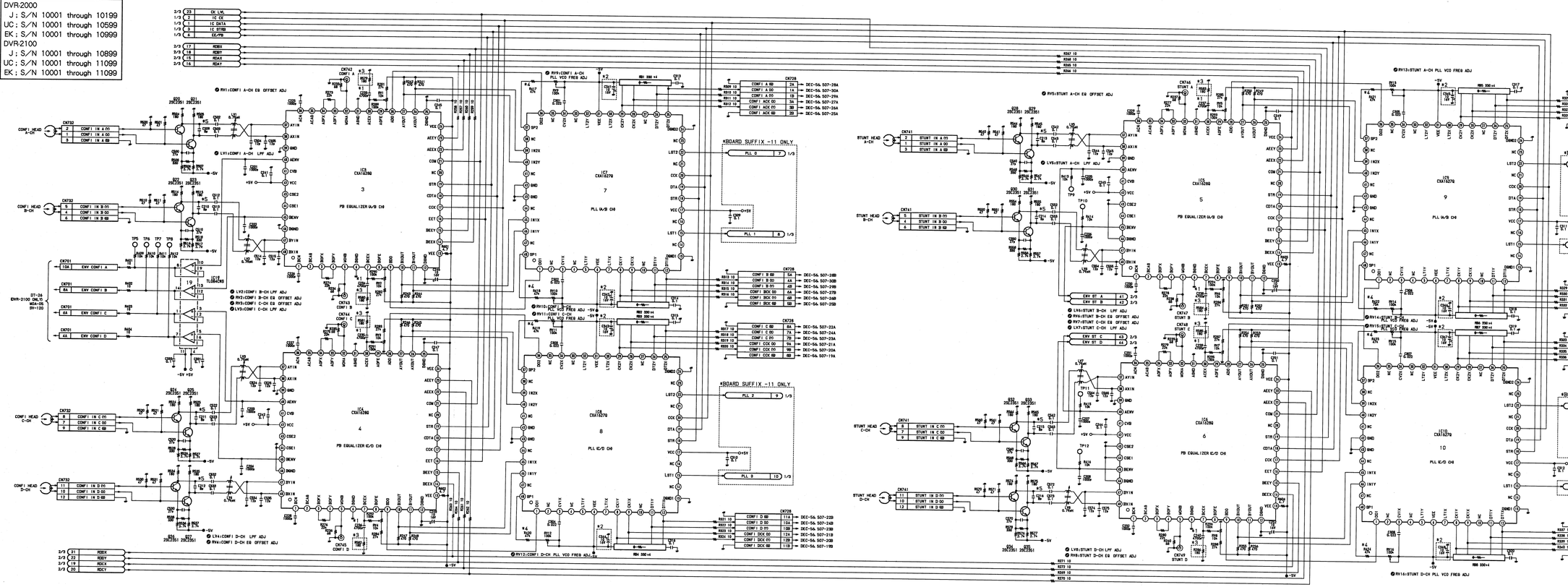

NOTE		
MARK	CHANGED INFORMATION	SERIAL NO.
#1	C235, C234, C235, C236, C237, C238, C239, C240: 0.022 ⟶ 4700P	DVR-2000 J : 810001- UC : 810001- EK : 810001- DVR-2100 J : 810201- UC : 810201- EK : 810201-
#2	C341, C342, C343, C344, C345, C346, C347 AND C348 ARE ADDED.	
#3	R579, R580, R581, R582, R585, R584, R585 AND R586 ARE ADDED.	
#4	R417, R418, R419, R420, R421, R422, R423, R424: 75Ω ⟶ 47Ω	
#5	C209, C210, C211, C212, C213, C214, C215, C216: 10P ⟶ 8P	

RF-23 BOARD **(3/3)**
BOARD NO. 1-639-125-11 (-12, -13)

DVR-2000 LJ (810001-810199
DVR-2000 UCJ (810001-810599
DVR-2000 EKJ (810001-810999
DVR-2100 LJ (810001-810899
DVR-2100 UCJ (810001-811099
DVR-2100 EKJ (810001-811099

CARD RACK RF-23 (3/3) BOARD RF-23 (3/3) BOARD CARD RACK

RF-23 BOARD **(3/3)**

RF REC/PB Processor

DVR-2000
J ; S/N 10001 through 10199
UC ; S/N 10001 through 10599
EK ; S/N 10001 through 10999
DVR-2100
J ; S/N 10001 through 10899
UC ; S/N 10001 through 11099
EK ; S/N 10001 through 11099

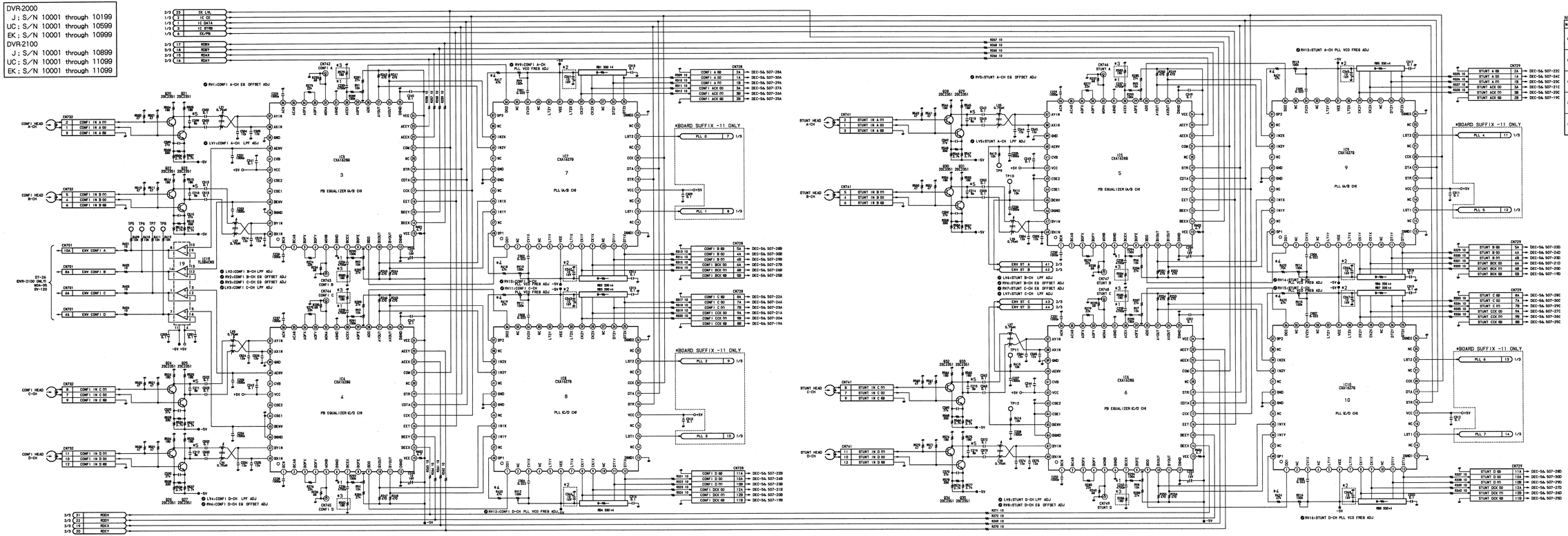

NOTE

MARK	CHANGED INFORMATION	SERIAL NO.
#1	C233, C234, C235, C236, C237, C238, C239, C240: 0.022 ——— 4700P	
#2	C341, C342, C343, C344, C345, C346, C347 AND C348 ARE ADDED.	DVR-2000 J ; #10001- UC ; #10001- EK ; #10001- DVR-2100 J ; #10001- UC ; #10001- EK ; #10101-
#3	R579, R580, R581, R582, R585, R586, R587 AND R588 ARE ADDED.	
#4	R417, R418, R419, R420, R421, R422, R423, R424: 75k ——— 47k	
#5	C209, C210, C211, C212, C213, C214, C215, C216: 10P ——— 8P	

RF-23 BOARD **(3/3)**

BOARD NO. 1-639-125-11 -12, -13

DVR-2000 UJ ; #10001-#10199
DVR-2000 UC ; #10001-#10599
DVR-2000 EK ; #10001-#10999
DVR-2100 UJ ; #10001-#10899
DVR-2100 UC ; #10001-#11099
DVR-2100 EK ; #10001-#11099

19-21 (a)

CARD RACK REC-09 (1/8) BOARD REC-09 (1/8) BOARD CARD RACK

REC-09 BOARD (1/8)

REC Signal Processor

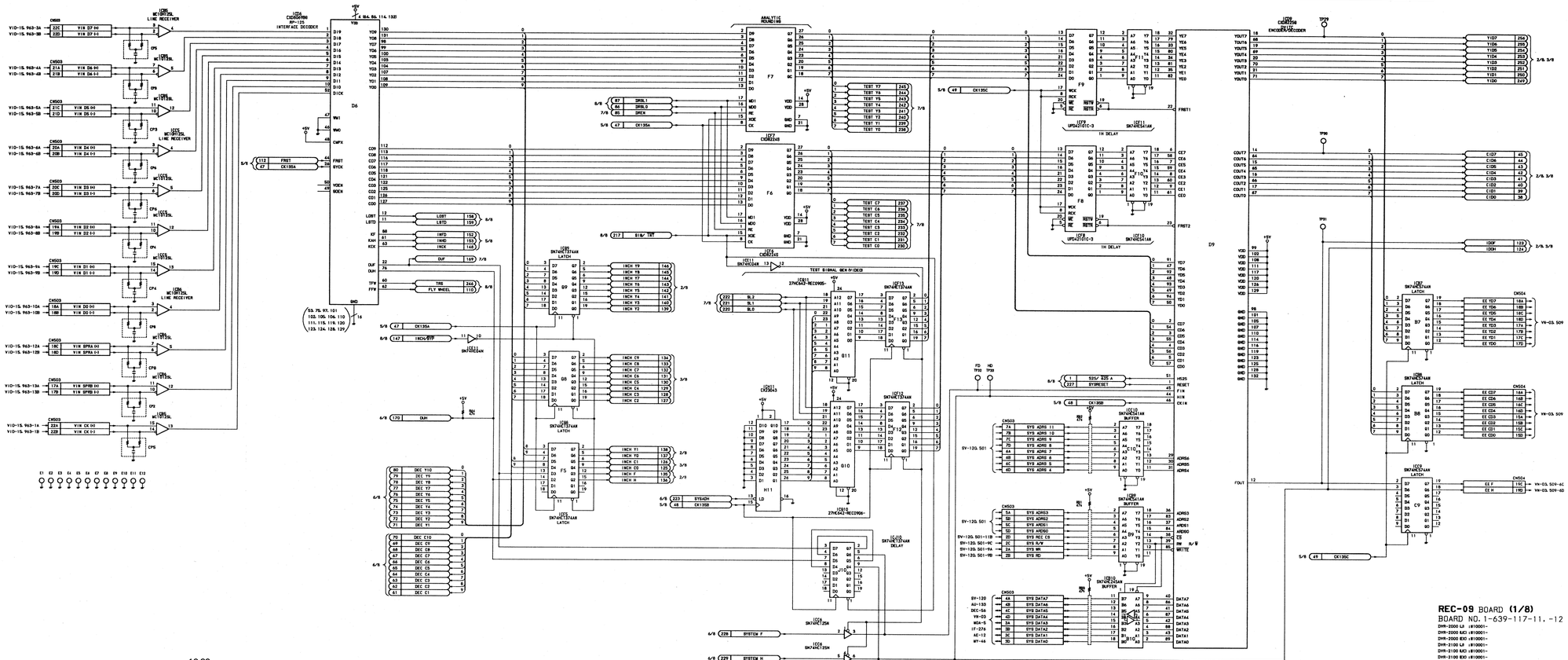

19-23

CARD RACK REC-09 (2/8) BOARD REC-09 (2/8) BOARD CARD RACK

REC-09 BOARD (2/8)

REC Signal Processor

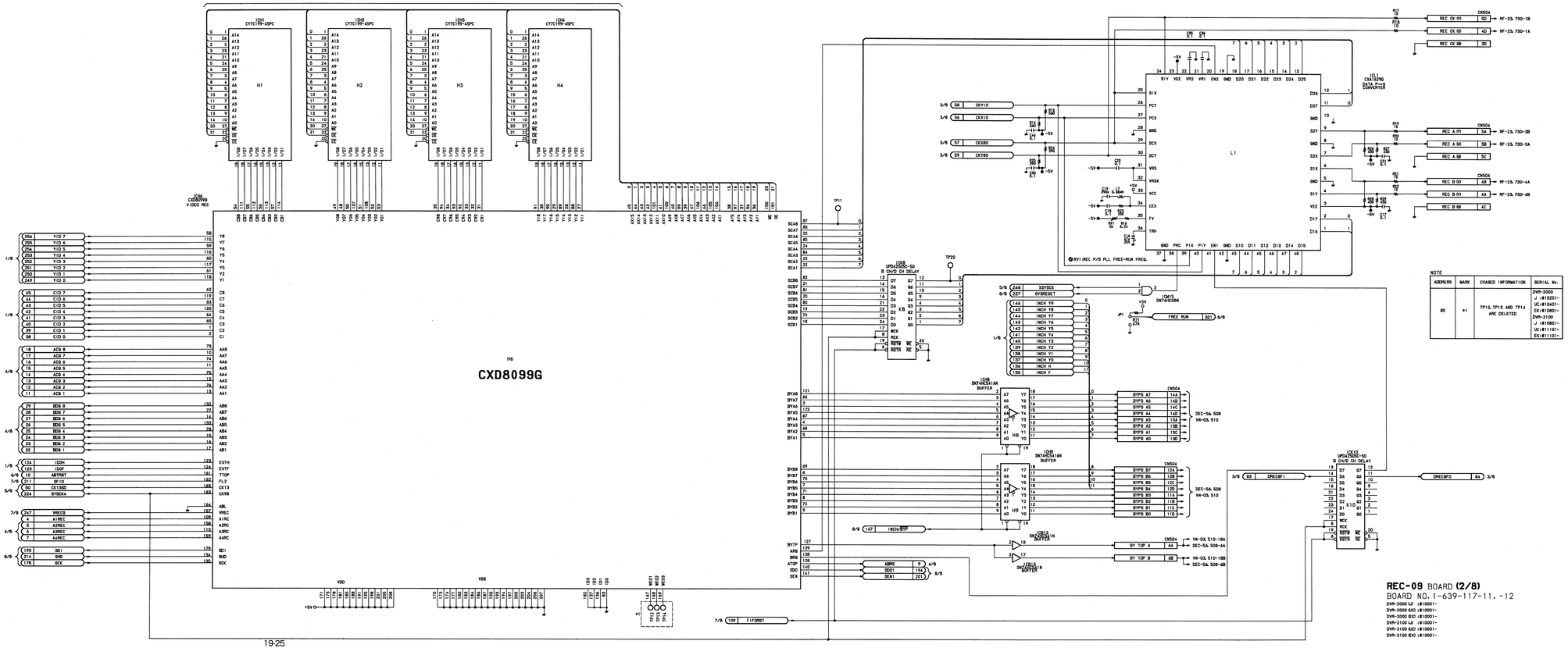

ADDRESS	MARK	CHANGED INFORMATION	SERIAL No.
65	*1	TP12, TP13 AND TP14 ARE DELETED	DVR-2000 J (810001- UC(810401- EX(810601- DVR-3100 J (810801- UC(811101- EX(811101-

REC-09 BOARD (2/8)

BOARD NO. 1-639-117-11, -12

DVR-3000 LJ (810001-
DVR-3000 SJC) (810001-
DVR-3000 EXC) (810001-
DVR-3100 LJ (810001-
DVR-3100 SJC) (810001-
DVR-3100 EXC) (810001-

19-25

CARD RACK REC-09 (3/8) BOARD REC-09 (3/8) BOARD CARD RACK

REC-09 BOARD **(3/8)**

REC Signal Processor

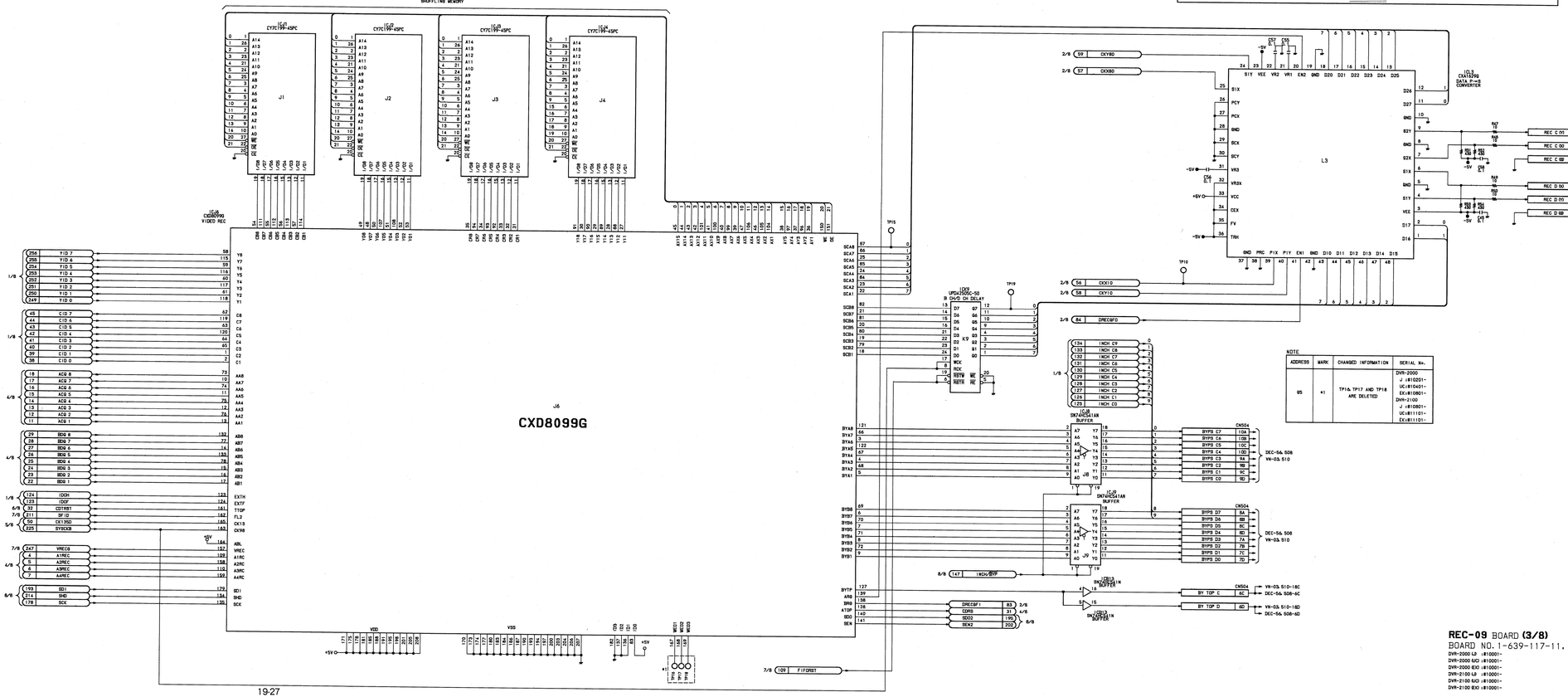

REC-09 BOARD **(3/8)**

BOARD NO. 1-639-117-11, -12

DVR-2000 LD :#10001-
DVR-2000 SJC :#10001-
DVR-2000 EX0 :#10001-
DVR-2100 LD :#10001-
DVR-2100 SJC :#10001-
DVR-2100 EX0 :#10001-

REC-09 (4/8) BOARD CARD RACK
CARD RACK **REC-09 (4/8) BOARD**

REC-09 BOARD (4/8)

REC Signal Processor

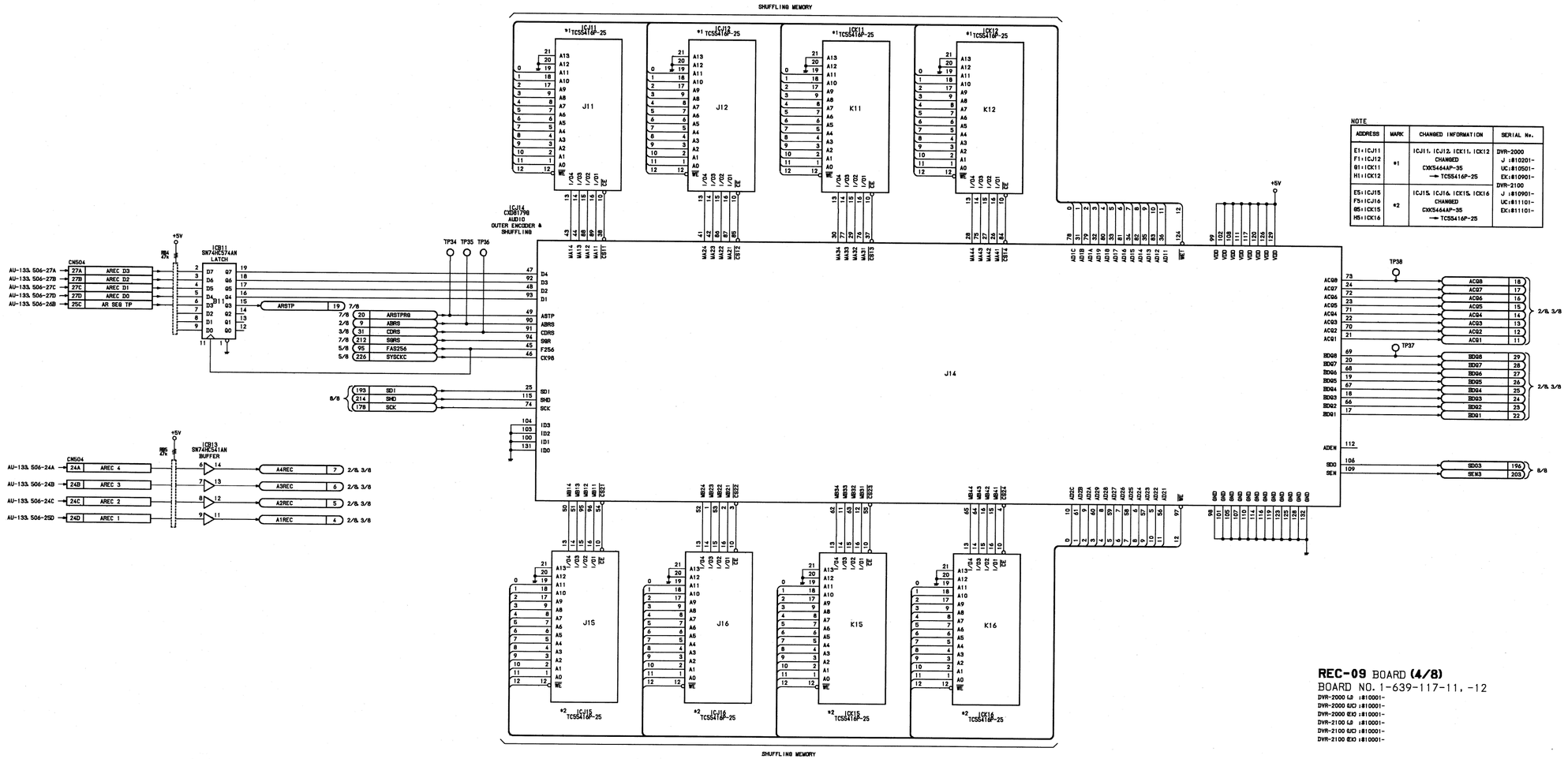

NOTE

ADDRESS	MARK	CHANGED INFORMATION	SERIAL No.
E1:ICJ11 F1:ICJ12 G1:ICK11 H1:ICK12	*1	ICJ11, ICJ12, ICK11, ICK12 CHANGED CXK5464AP-35 → TC55416P-25	DVR-2000 J :810201- UC:810501- EX:810901-
E5:ICJ15 F5:ICJ16 G5:ICK15 H5:ICK16	*2	ICJ15, ICJ16, ICK15, ICK16 CHANGED CXK5464AP-35 → TC55416P-25	DVR-2100 J :810901- UC:811101- EX:811101-

REC-09 BOARD **(4/8)**

BOARD NO. 1-639-117-11, -12

DVR-2000 (J) :810001-
DVR-2000 (UC) :810001-
DVR-2000 (EX) :810001-
DVR-2100 (J) :810001-
DVR-2100 (UC) :810001-
DVR-2100 (EX) :810001-

19-29

CARD RACK REC-09 (5/8) BOARD REC-09 (5/8) BOARD CARD RACK

REC-09 BOARD (5/8)

REC Signal Processor

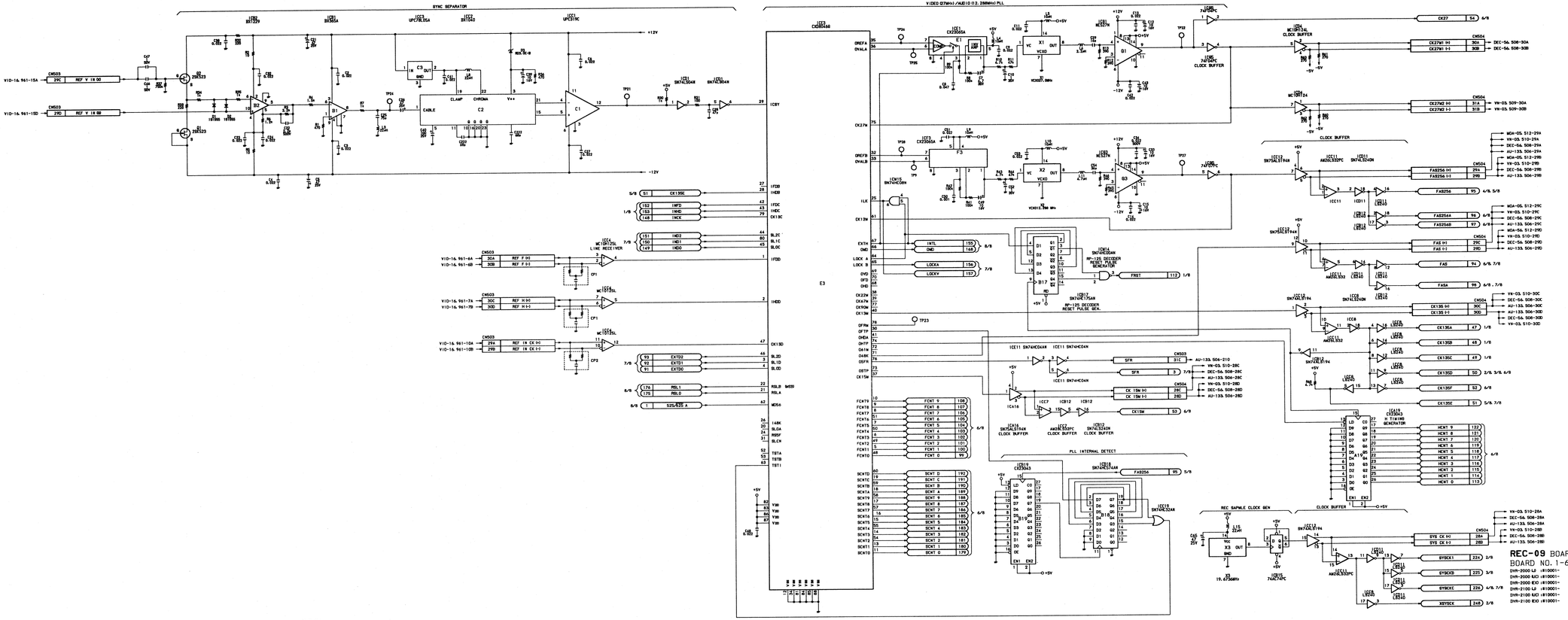

CARD RACK REC-09 (6/8) BOARD REC-09 (6/8) BOARD CARD RACK

REC-09 BOARD (6/8)

REC Signal Processor

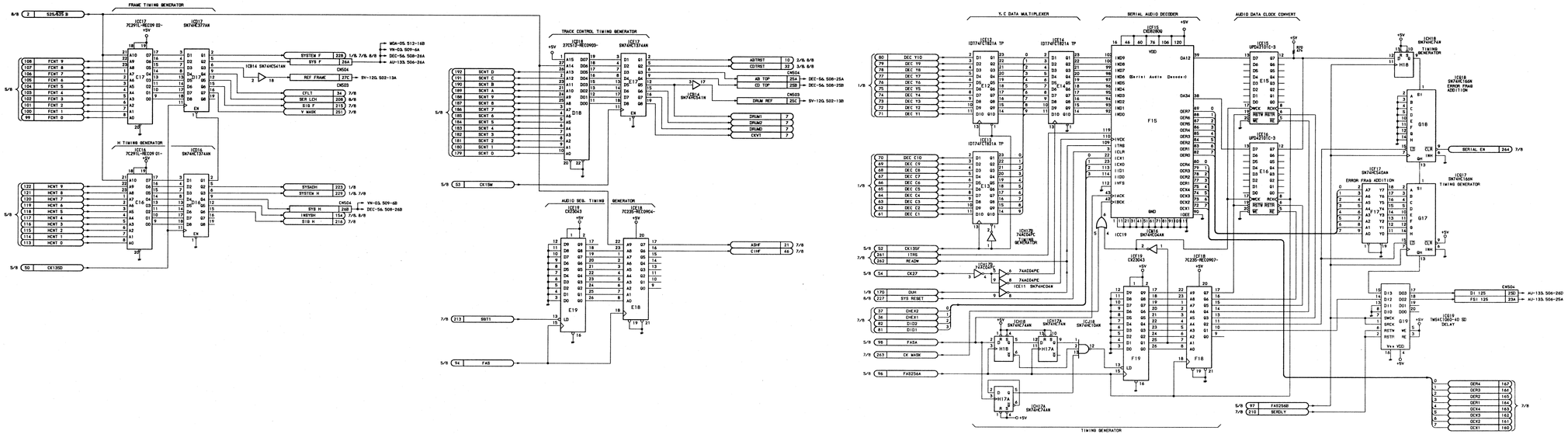

REC-09 BOARD (6/8)

BOARD NO. 1-639-117-11, -12

DVR-2000 LJ (#10001-
DVR-2000 SJ (#10001-
DVR-2000 EXJ (#10001-
DVR-2100 LJ (#10001-
DVR-2100 SJ (#10001-
DVR-2100 EXJ (#10001-

CARD RACK REC-09 (7/8) BOARD REC-09 (7/8) BOARD CARD RACK

REC-09 BOARD (7/8)

REC Signal Processor

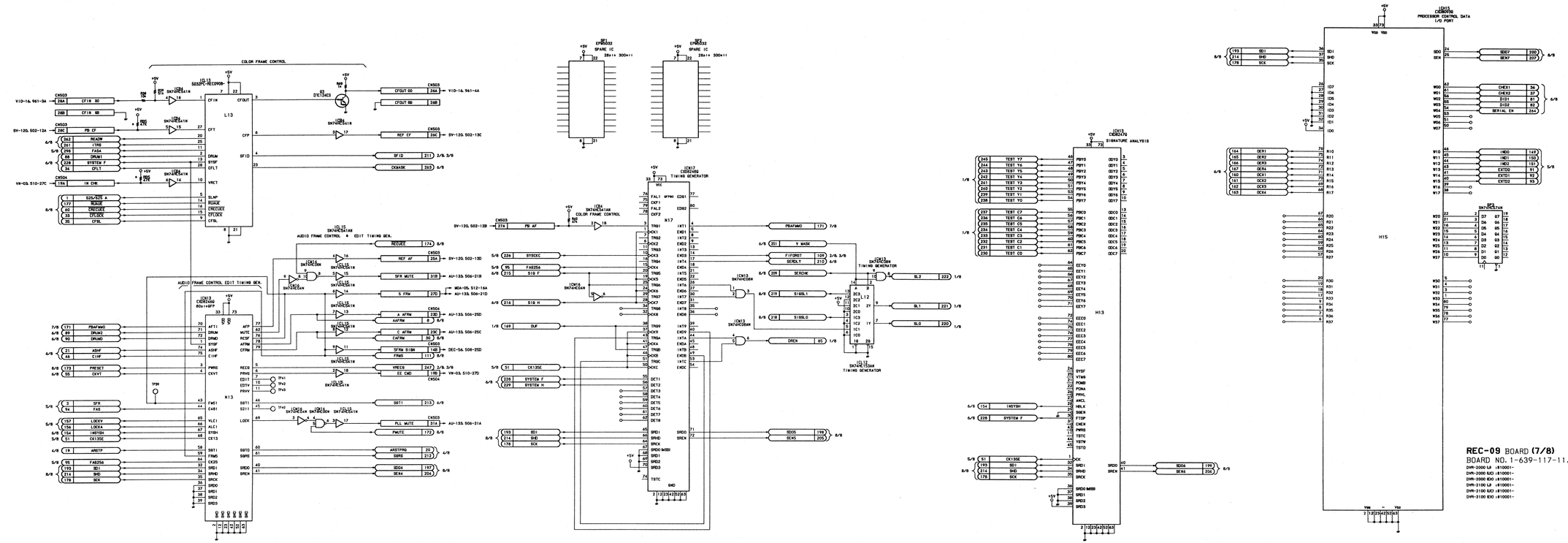

19-35

REC-09 (8/8) BOARD CARD RACK
CARD RACK REC-09 (8/8) BOARD

REC-09 BOARD (8/8)

REC Signal Processor

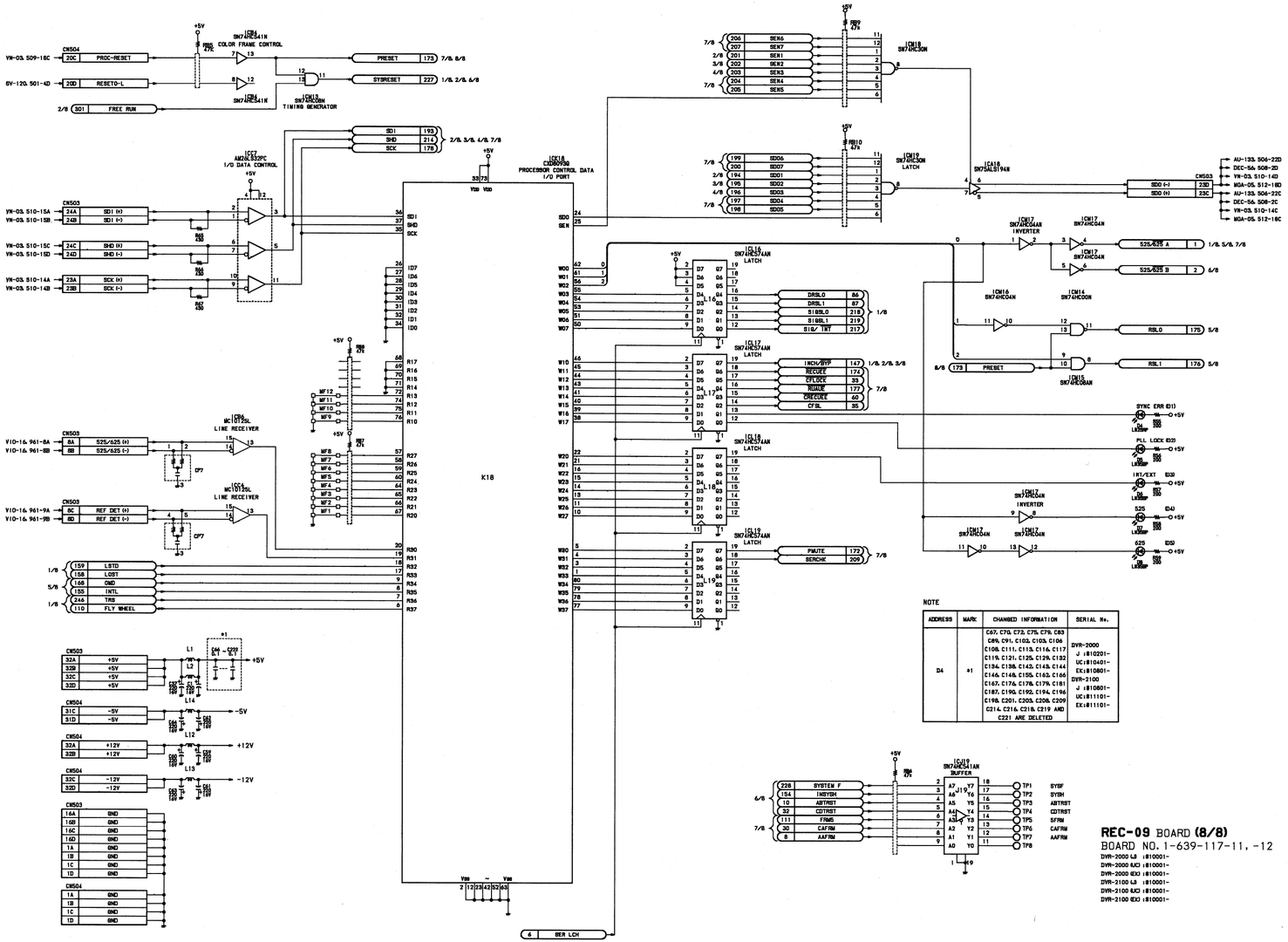

ADDRESS	MARK	CHANGED INFORMATION	SERIAL No.
D4	#1	C67, C70, C72, C75, C78, C83 C86, C91, C102, C103, C106 C108, C111, C113, C116, C117 C119, C121, C125, C129, C132 C134, C138, C142, C143, C144 C146, C148, C155, C162, C164 C167, C176, C178, C179, C181 C187, C190, C192, C194, C196 C198, C201, C203, C206, C209 C214, C216, C218, C219 AND C221 ARE DELETED	DVR-2000 J :#10201- UC:#10401- EX:#10801- DVR-2100 J :#10801- UC:#11101- EX:#11101-

REC-09 BOARD **(8/8)**

BOARD NO. 1-639-117-11, -12

DVR-2000 LJ :#10001-
DVR-2000 UC) :#10001-
DVR-2000 EX) :#10001-
DVR-2100 LJ :#10001-
DVR-2100 UC) :#10001-
DVR-2100 EX) :#10001-

19-37

DEC-56 (1/10) BOARD CARD RACK
CARD RACK DEC-56 (1/10) BOARD

DEC-56 BOARD (1/10)

PB Signal Processor

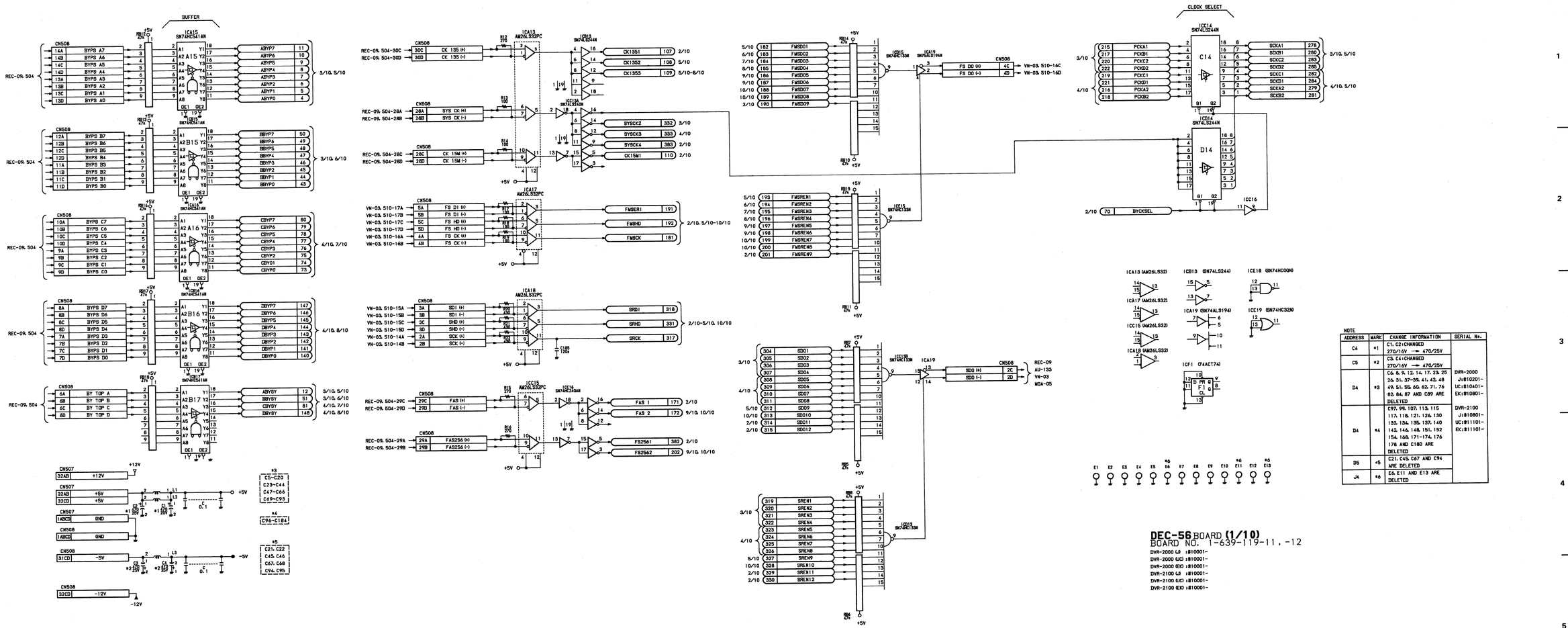

NOTE			
ADDRESS	MARK	CHANGE INFORMATION	SERIAL No.
C4	*1	C1, C2:CHANGED 270/16V → 470/25V	
C5	*2	C3, C4:CHANGED 270/16V → 470/25V	
D4	*3	C6, 8, 9, 12, 14, 17, 23, 25 26, 31, 37-39, 41, 42, 48 49, 51, 55, 60, 63, 71, 76 82, 84, 87 AND C89 ARE DELETED	DVR-2000 J:#10201- UC:#10401- EK:#10801-
D4	*4	C97, 99, 107, 113, 115 117, 118, 121, 126, 130 132, 134, 135, 137, 140 142, 146, 148, 151, 152 154, 168, 171-174, 176 178 AND C180 ARE DELETED	DVR-2100 J:#10801- UC:#11101- EK:#11101-
D5	*5	C21, C45, C67 AND C94 ARE DELETED	
J4	*6	E6, E11 AND E13 ARE DELETED	

DEC-56 BOARD **(1/10)**
BOARD NO. 1-639-119-11, -12

DVR-2000 LJ :#10001-
DVR-2000 (UC) :#10001-
DVR-2000 (EK) :#10001-
DVR-2100 LJ :#10001-
DVR-2100 (UC) :#10001-
DVR-2100 (EK) :#10001-

19-39

CARD RACK DEC-56 (2/10) BOARD DEC-56 (2/10) BOARD CARD RACK

DEC-56 BOARD (2/10)

PB Signal Processor

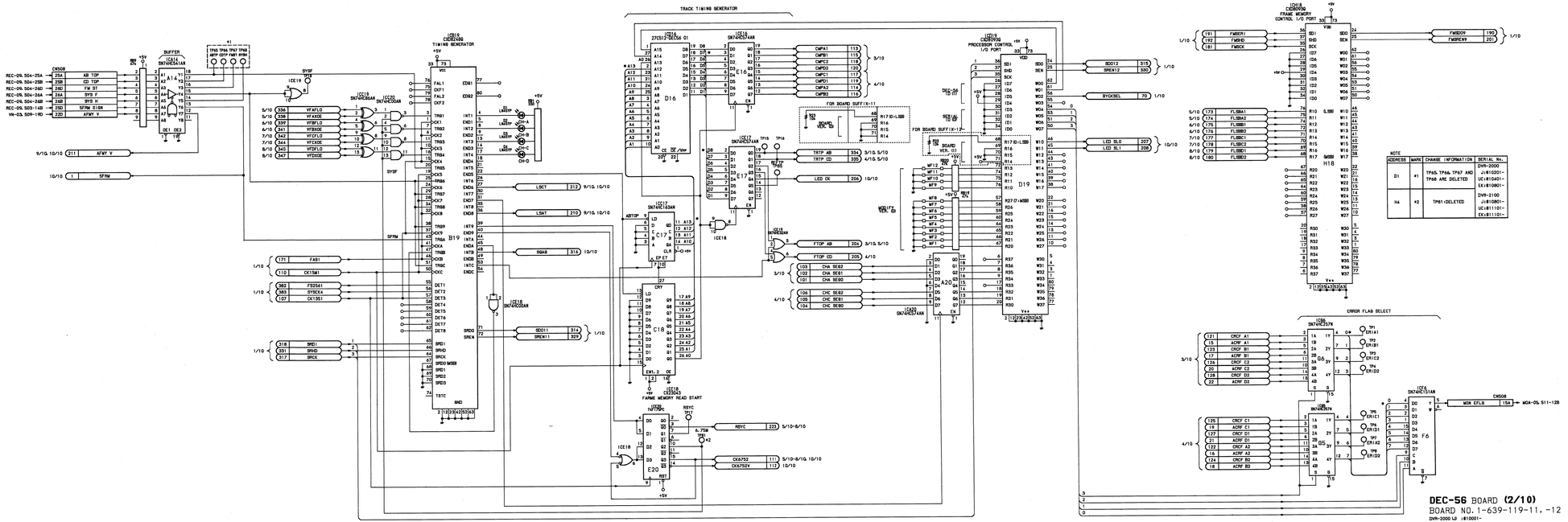

19-41

CARD RACK DEC-56 (3/10) BOARD DEC-56 (3/10) BOARD CARD RACK

DEC-56 BOARD (3/10)

PB Signal Processor

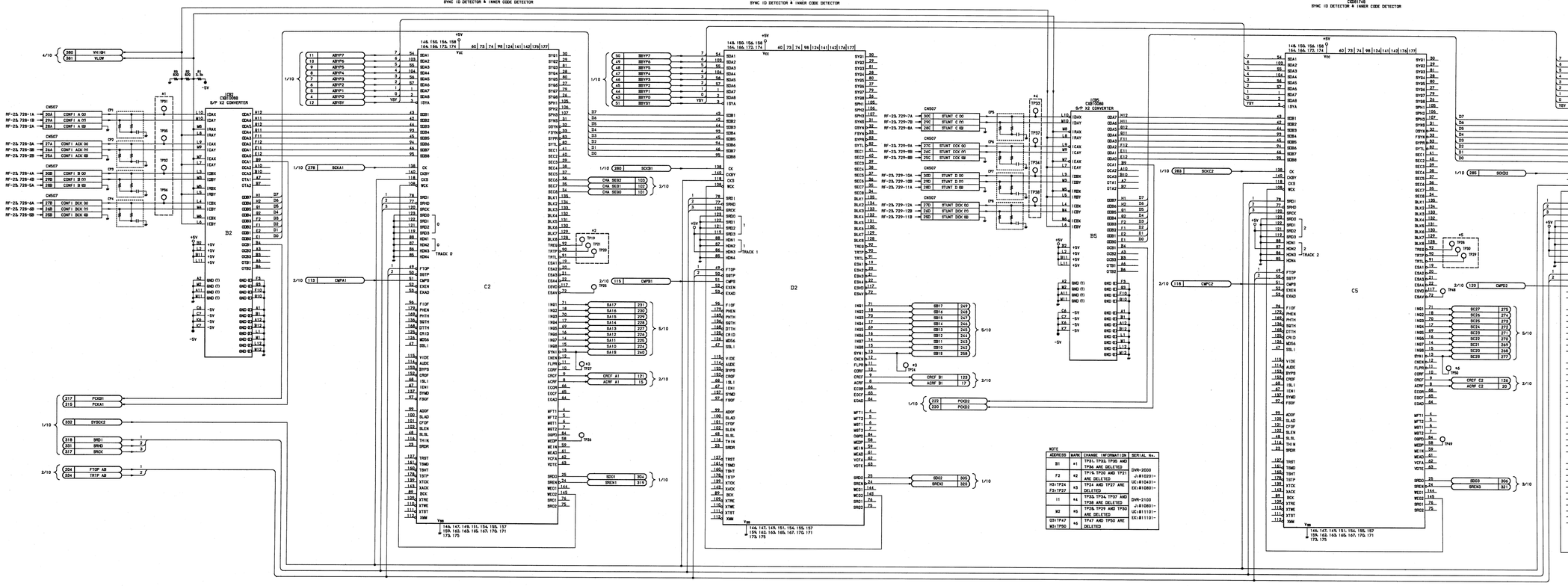

NOTE			
ADDRESS	MARK	CHANGE INFORMATION	SERIAL No.
B1	#1	TP31, TP32, TP36 AND TP36A ARE DELETED	DVR-2000 J:#10201- UC:#10401- EX:#10601-
F2	#2	TP15, TP20 AND TP21 ARE DELETED	
H3-TP24 F3-TP27	#3	TP24 AND TP27 ARE DELETED	
I1	#4	TP33, TP34, TP37 AND TP38 ARE DELETED	DVR-2100 J:#10801- UC:#11101- EX:#11101-
W2	#5	TP28, TP29 AND TP30 ARE DELETED	
G3-TP47 W3-TP50	#6	TP47 AND TP50 ARE DELETED	

DEC-56 BOARD **(3/10)**
BOARD NO. 1-639-119-11, -12

DVR-2000 LJ (#10001-
DVR-2000 KJ (#10001-
DVR-2000 EXJ (#10001-
DVR-2100 LJ (#10001-
DVR-2100 KJ (#10001-
DVR-2100 EXJ (#10001-

19-43

CARD RACK DEC-56 (4/10) BOARD DEC-56 (4/10) BOARD CARD RACK

DEC-56 BOARD (4/10)

PB Signal Processor

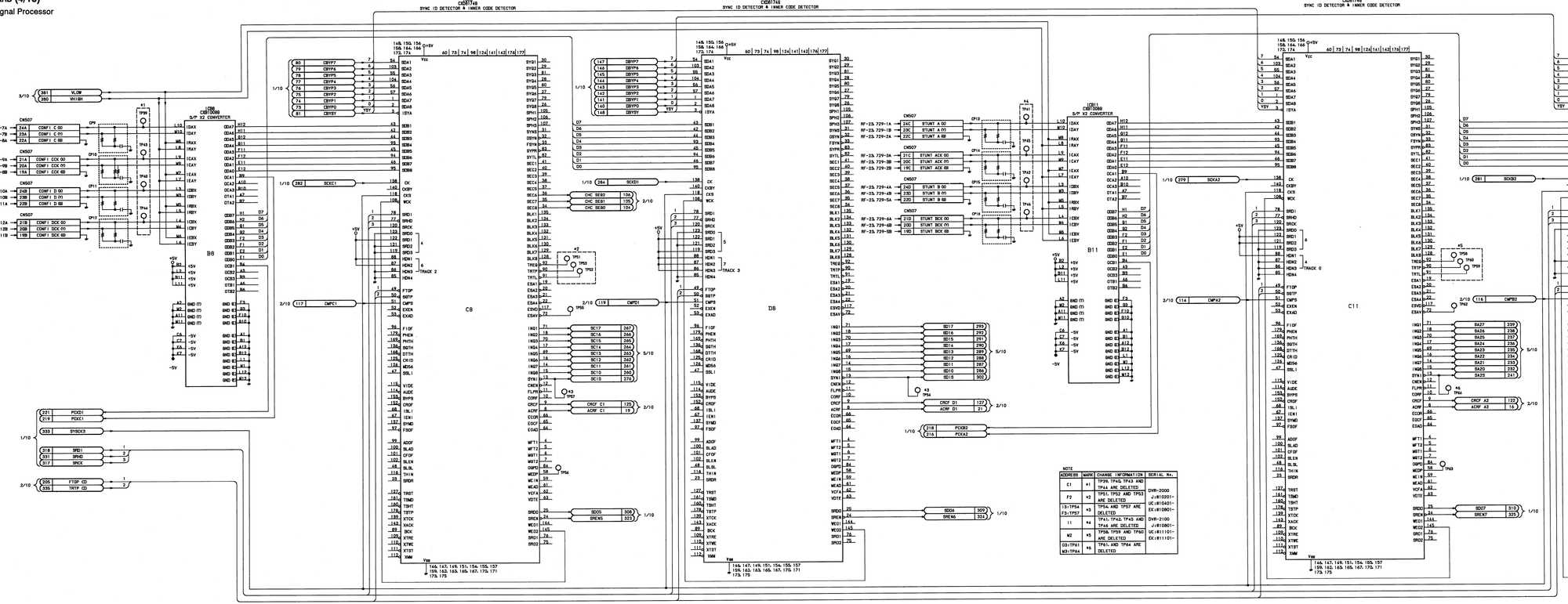

NOTE ADDRESS	MARK	CHANGE INFORMATION	SERIAL No.
C1	#1	TP39, TP40, TP43 AND TP44 ARE DELETED	DVR-2000 JU:810001- UC:810401- EX:810801-
F2	#2	TP51, TP52 AND TP53 ARE DELETED	
F3:TP54 F3:TP57	#3	TP54, TP55, TP56 AND TP57 ARE DELETED	DVR-2100 JU:810001- UC:811101- EX:811101-
I1	#4	TP41, TP42, TP45 AND TP46 ARE DELETED	
M2	#5	TP58, TP59 AND TP60 ARE DELETED	
D3:TP61 M3:TP64	#6	TP61 AND TP64 ARE DELETED	

DEC-56 BOARD (4/10)

BOARD NO. 1-639-119-11, -12

DVR-2000 LB (#10001-
DVR-2000 KC) (#10001-
DVR-2000 EX) (#10001-
DVR-2100 LB (#10001-
DVR-2100 KC) (#10001-
DVR-2100 EX) (#10001-

CARD RACK DEC-56 (5/10) BOARD DEC-56 (5/10) BOARD CARD RACK

DEC-56 BOARD (5/10)

PB Signal Processor

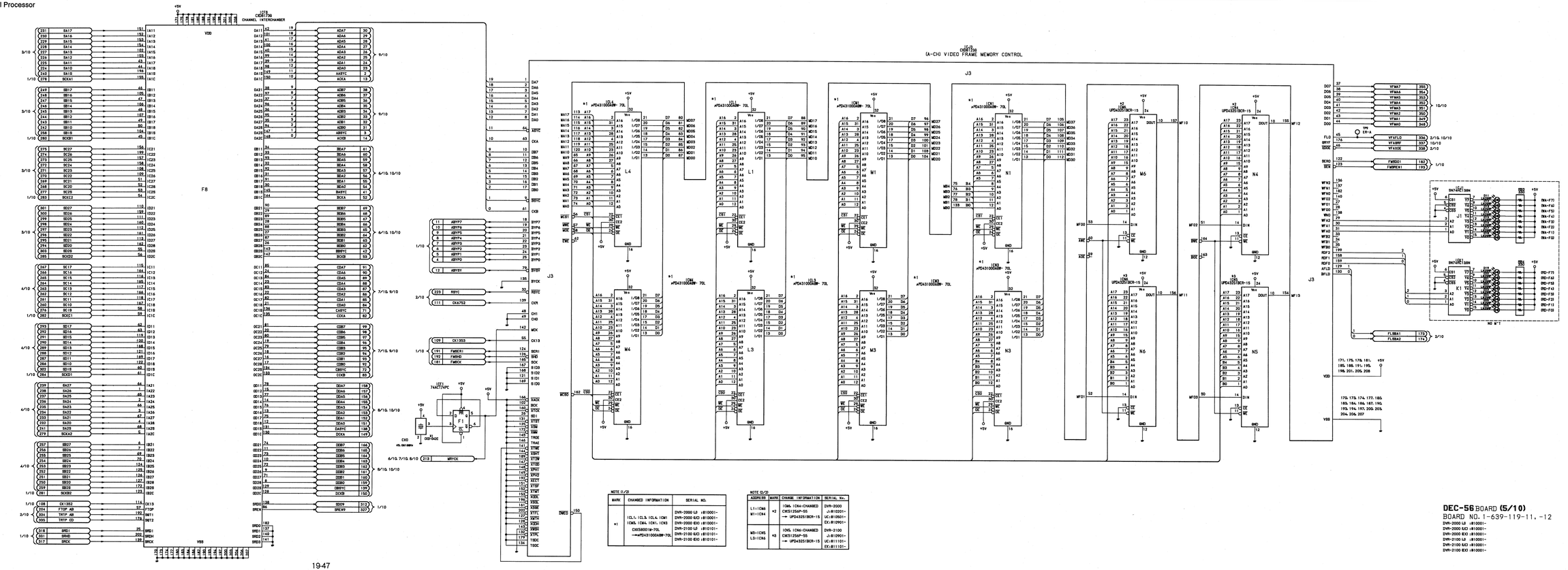

19-47

DEC-56 BOARD (6/10)

PB Signal Processor

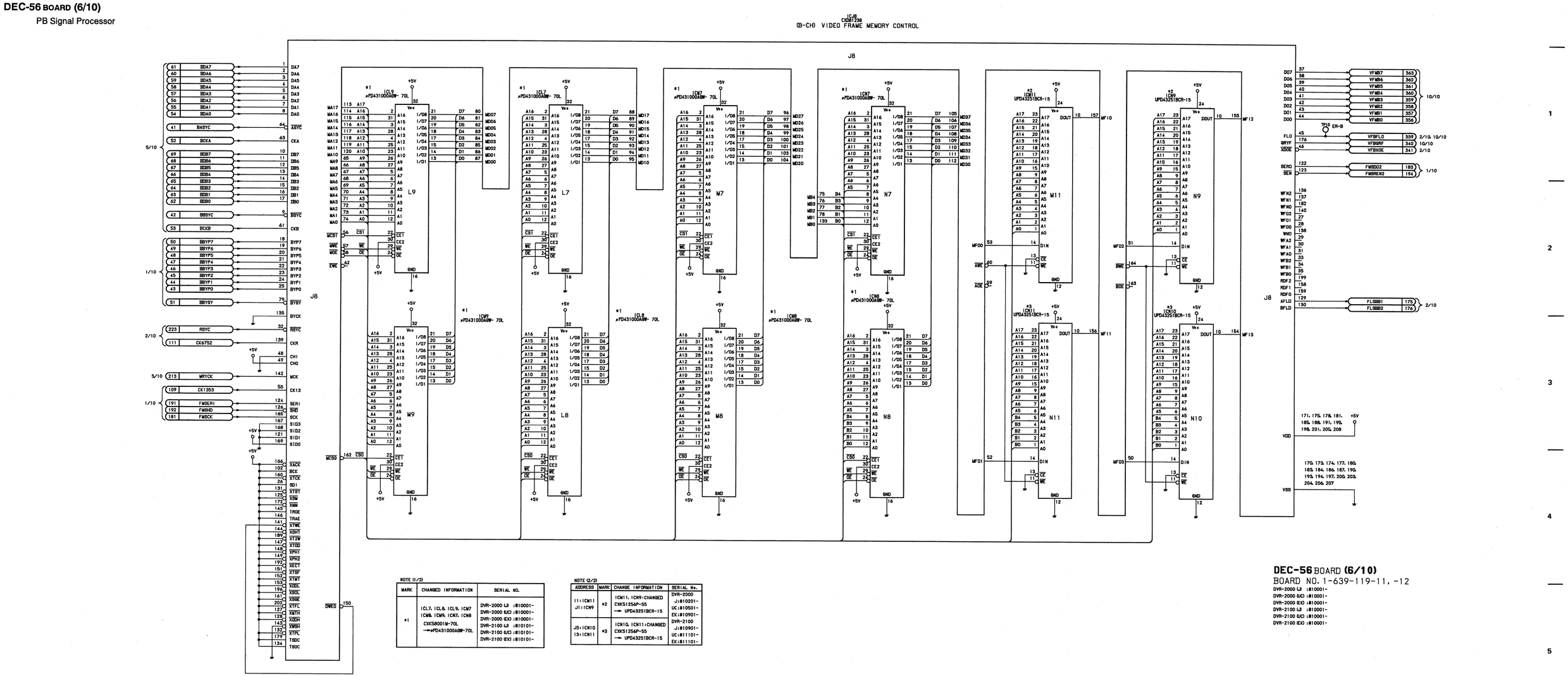

NOTE (1/2)		
MARK	CHANGED INFORMATION	SERIAL NO.
*1	IC17, IC18, IC19, IC17, IC18, IC19, IC17, IC18 CXK58001M-70L →μPD431000AGW-70L	DVR-2000 LJ :#10001- DVR-2000 UC :#10001- DVR-2000 EX :#10001- DVR-2100 LJ :#10101- DVR-2100 UC :#10101- DVR-2100 EX :#10101-

NOTE (2/2)			
ADDRESS	MARK	CHANGE INFORMATION	SERIAL No.
I11:IC11 J11:IC19	*2	IC11, IC19:CHANGED CXK51254P-55 → UPD43251BCR-15	DVR-2000 J :#10201- UC :#10501- EX :#10901-
J5:IC10 I5:IC11	*3	IC10, IC11:CHANGED CXK51254P-55 → UPD43251BCR-15	DVR-2100 J :#10901- UC :#11101- EX :#11101-

DEC-56 BOARD (6/10)
BOARD NO. 1-639-119-11, -12
DVR-2000 LJ :#10001-
DVR-2000 UC :#10001-
DVR-2000 EX :#10001-
DVR-2100 LJ :#10001-
DVR-2100 UC :#10001-
DVR-2100 EX :#10001-

DEC-56 (7/10) BOARD CARD RACK
CARD RACK DEC-56 (7/10) BOARD

DEC-56 BOARD (7/10)

PB Signal Processor

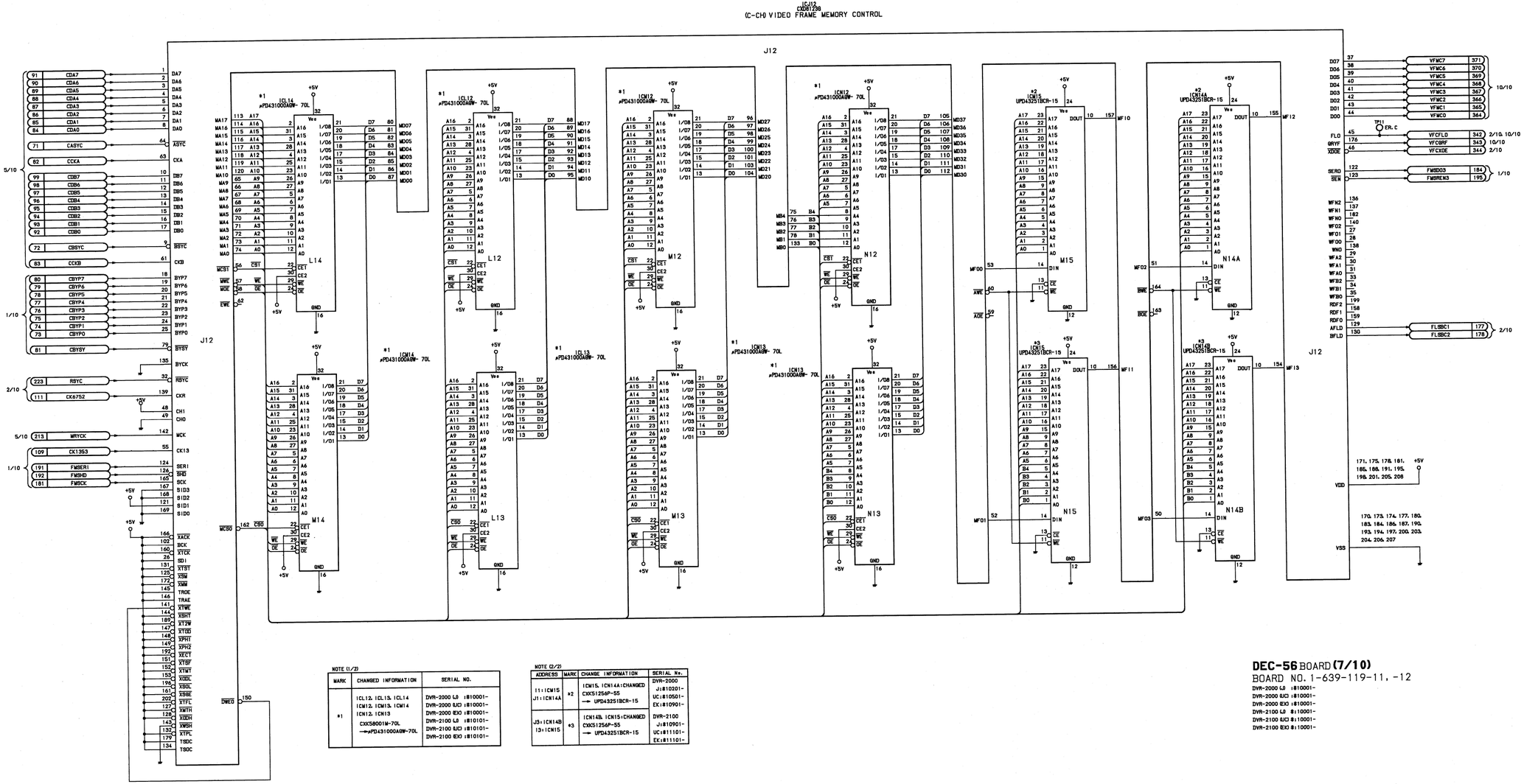

NOTE (1/2)

MARK	CHANGED INFORMATION	SERIAL NO.
*1	IC112, IC113, IC114 IC112, IC113, IC114 IC112, IC113 CXK58001M-70L →μPD431000AGW-70L	DVR-2000 GB :810001- DVR-2000 GUC :810001- DVR-2000 GEX :810001- DVR-2100 GB :810101- DVR-2100 GUC :810101- DVR-2100 GEX :810101-

NOTE (2/2)

ADDRESS	MARK	CHANGE INFORMATION	SERIAL No.
I1:IC115 J1:IC114A	*2	IC115, IC114A:CHANGED CXK51256P-55 → UPD432512BCR-15	DVR-2000 J:810201- UC:810501- EX:810901-
J3:IC114B I3:IC115	*3	IC114B, IC115:CHANGED CXK51256P-55 → UPD432512BCR-15	DVR-2100 J:810901- UC:811101- EX:811101-

DEC-56 BOARD (7/10)

BOARD NO. 1-639-119-11, -12

DVR-2000 GB :810001-
DVR-2000 GUC :810001-
DVR-2000 GEX :810001-
DVR-2100 GB :810001-
DVR-2100 GUC :810001-
DVR-2100 GEX :810001-

19-51

DEC-56 BOARD (8/10)

PB Signal Processor

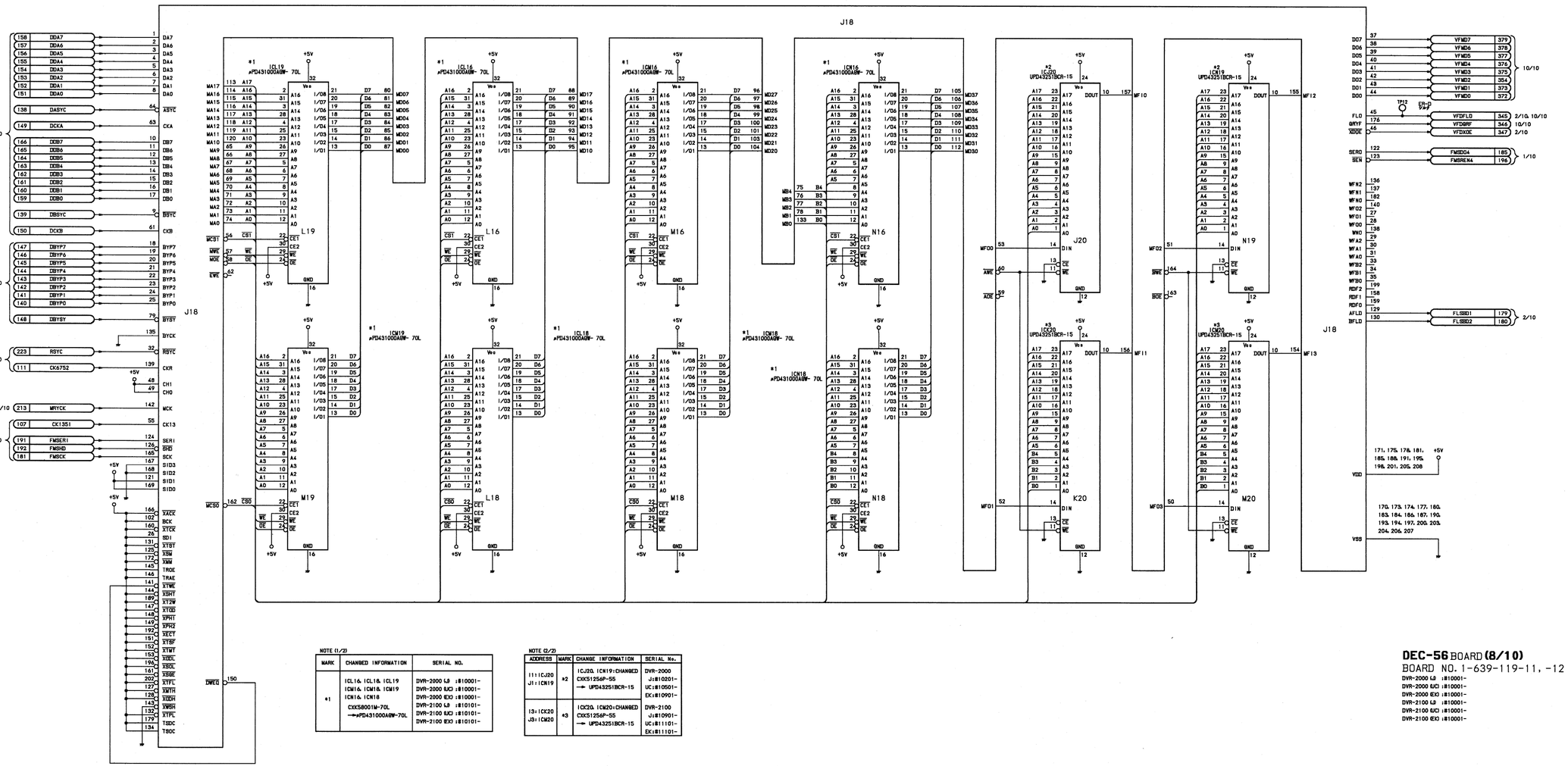

NOTE (1/2)

MARK	CHANGED INFORMATION	SERIAL NO.
*1	IC119 & IC118 & IC119 IC116 & IC118 & IC119 IC117 & IC118 CXK58001M-70L →μPD431000AGW-70L	DVR-2000 LJ :#10001- DVR-2000 UC :#10001- DVR-2000 EX :#10001- DVR-2100 LJ :#10101- DVR-2100 UC :#10101- DVR-2100 EX :#10101-

NOTE (2/2)

ADDRESS	MARK	CHANGE INFORMATION	SERIAL No.
I1:IC120 J1:IC119	*2	IC120, IC119:CHANGED CXK51254P-55 → UPD43251BCR-15	DVR-2000 J:#10201- UC:#10501- EX:#10901-
I3:IC120 J3:IC120	*3	IC120, IC120:CHANGED CXK51254P-55 → UPD43251BCR-15	DVR-2100 J:#10901- UC:#11101- EX:#11101-

DEC-56 BOARD (8/10)

BOARD NO. 1-639-119-11, -12

DVR-2000 LJ :#10001-
DVR-2000 UC :#10001-
DVR-2000 EX :#10001-
DVR-2100 LJ :#10001-
DVR-2100 UC :#10001-
DVR-2100 EX :#10001-

CARD RACK DEC-56 (9/10) BOARD DEC-56 (9/10) BOARD CARD RACK

DEC-56 BOARD (9/10)

PB Signal Processor

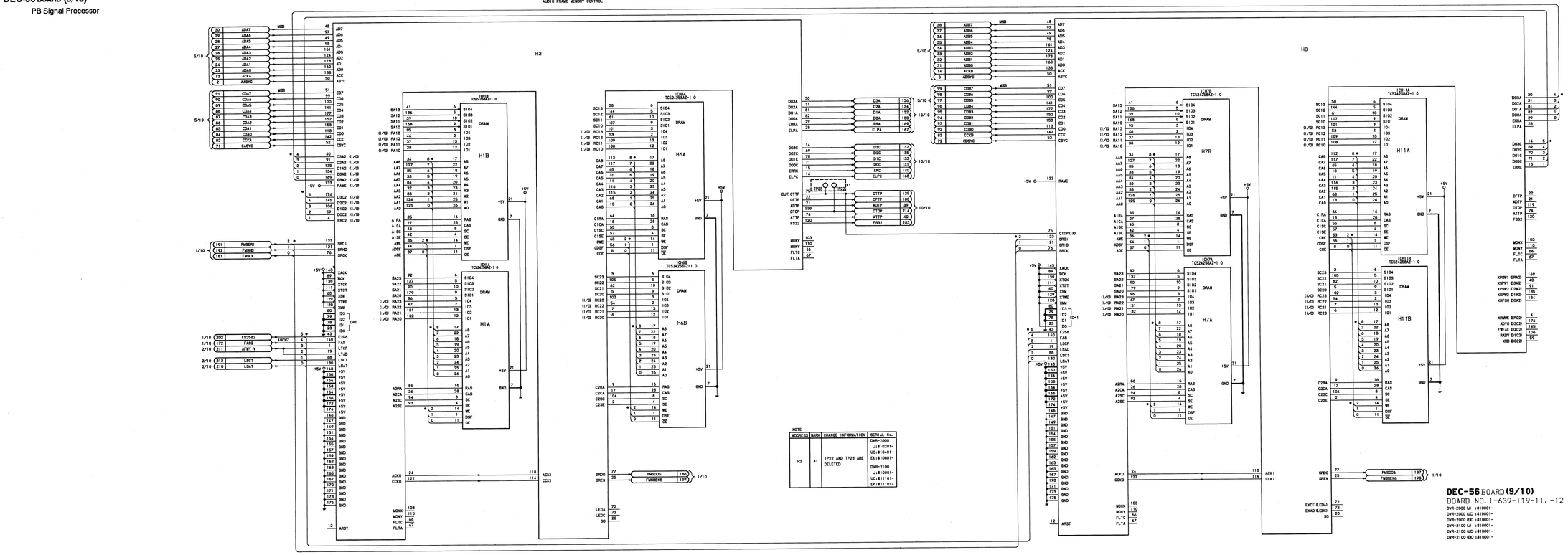

NOTE			
ADDRESS	MARK	CHANGE INFORMATION	SERIAL No.
H2	#1	TP22 AND TP23 ARE DELETED	DVR-2000 J:810201~ UC:810401~ EX:810601~ DVR-2100 J:810801~ UC:811101~ EX:811101~

DEC-56 BOARD (9/10)

BOARD NO. 1-639-119-11, -12

DVR-2000 LJ :810001~
DVR-2000 KJC :810001~
DVR-2000 EJC :810001~
DVR-2100 LJ :810001~
DVR-2100 KJC :810001~
DVR-2100 EJC :810001~

19-55

CARD RACK DEC-56 (10/10) BOARD DEC-56 (10/10) BOARD CARD RACK

DEC-56 BOARD (10/10)

PB Signal Processor

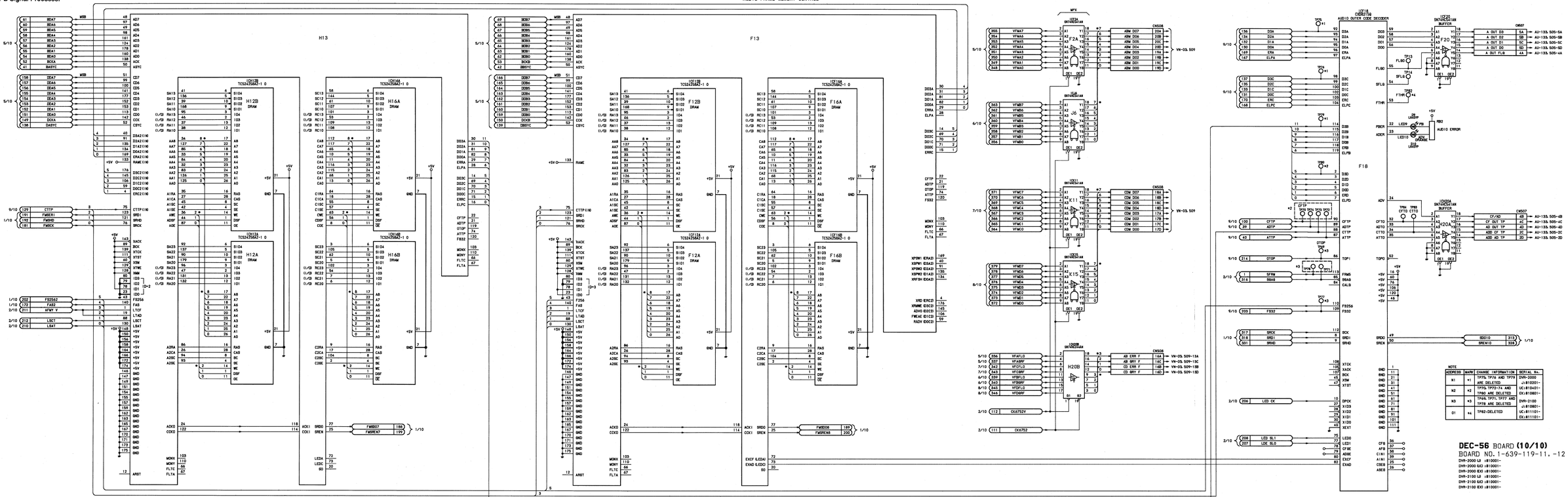

DEC-56 BOARD **(10/10)**

BOARD NO. 1-639-119-11, -12

19-57

CARD RACK VN-03 (1/10) BOARD VN-03 (1/10) BOARD CARD RACK

VN-03 BOARD (1/10)

PB Signal Processor

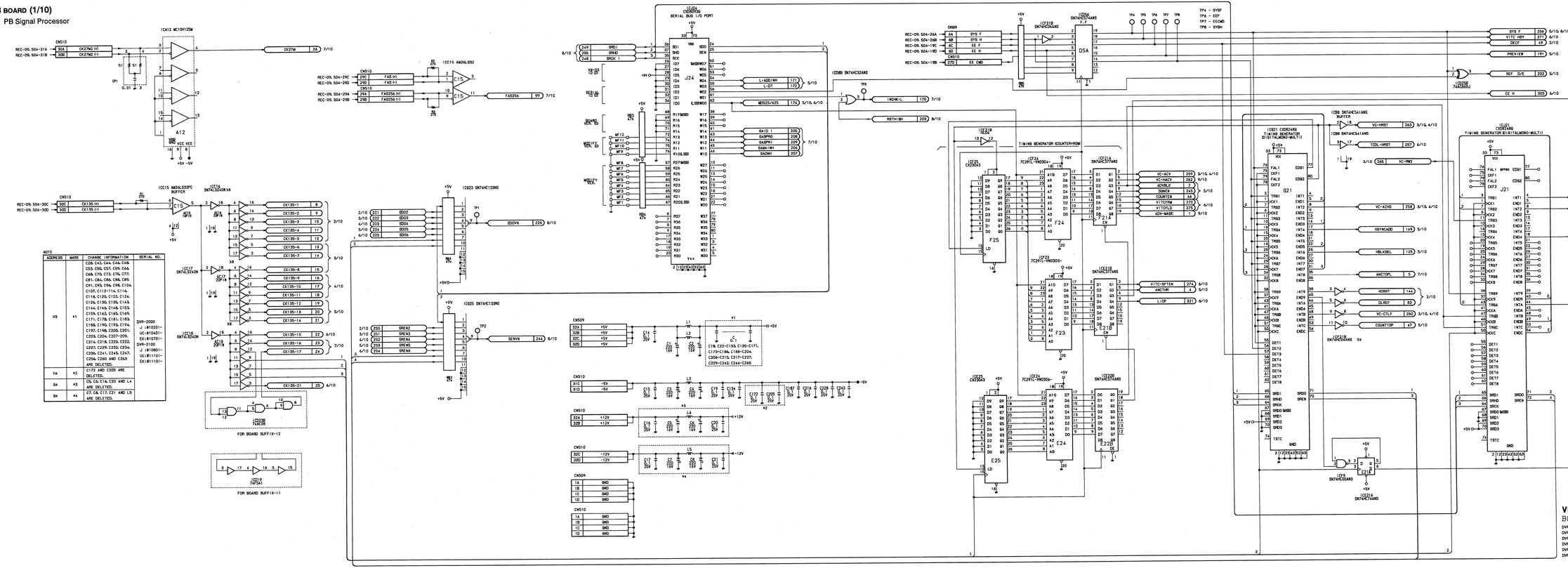

CARD RACK VN-03 (2/10) BOARD VN-03 (2/10) BOARD CARD RACK

VN-03 BOARD (2/10)

PB Signal Processor

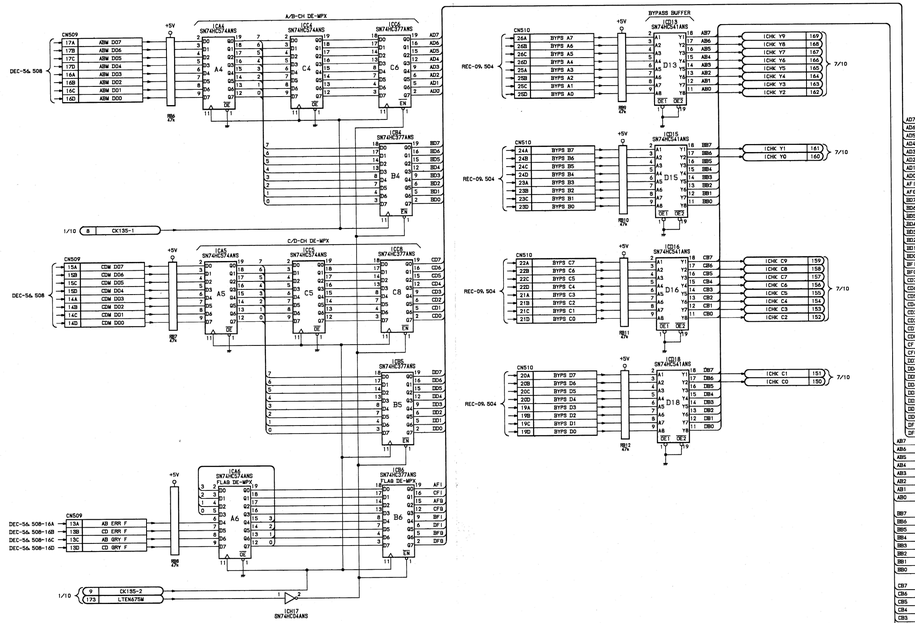

CARD RACK VN-03 (3/10) BOARD VN-03 (3/10) BOARD CARD RACK

VN-03 BOARD (3/10)

PB Signal Processor

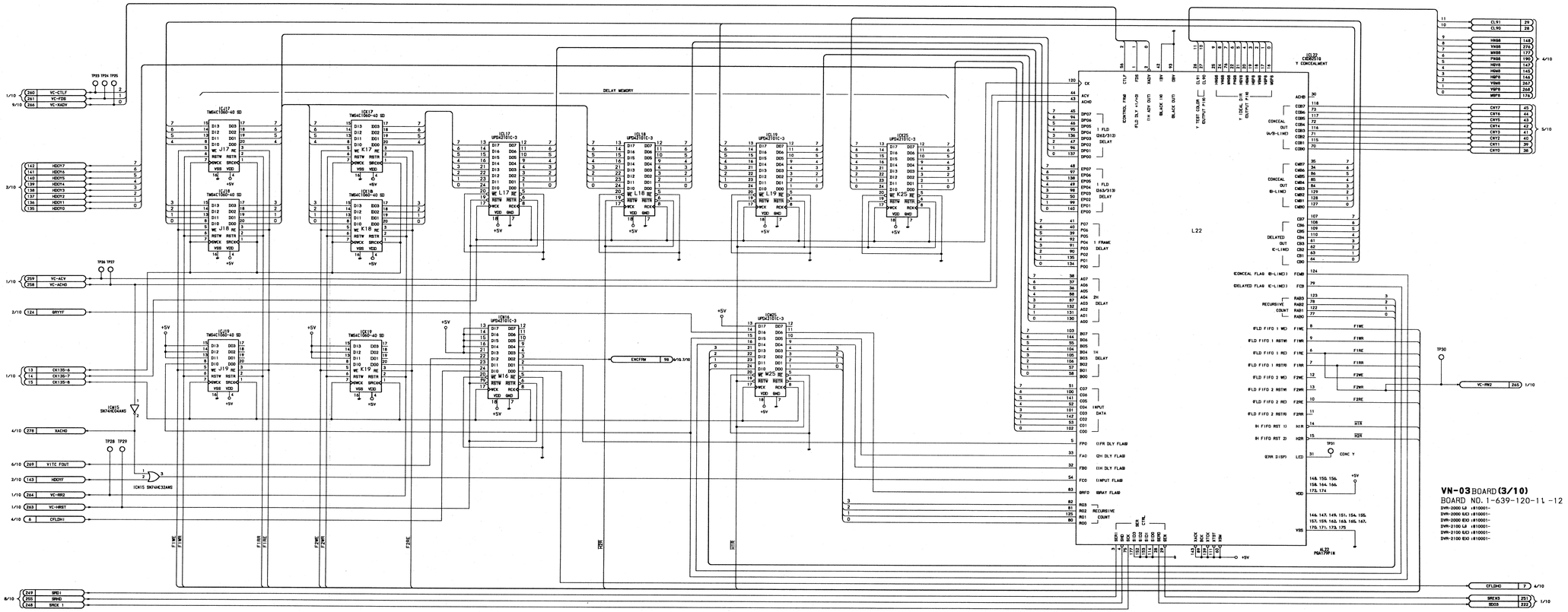

19-63

CARD RACK VN-03 (4/10) BOARD VN-03 (4/10) BOARD CARD RACK

VN-03 BOARD (4/10)

PB Signal Processor

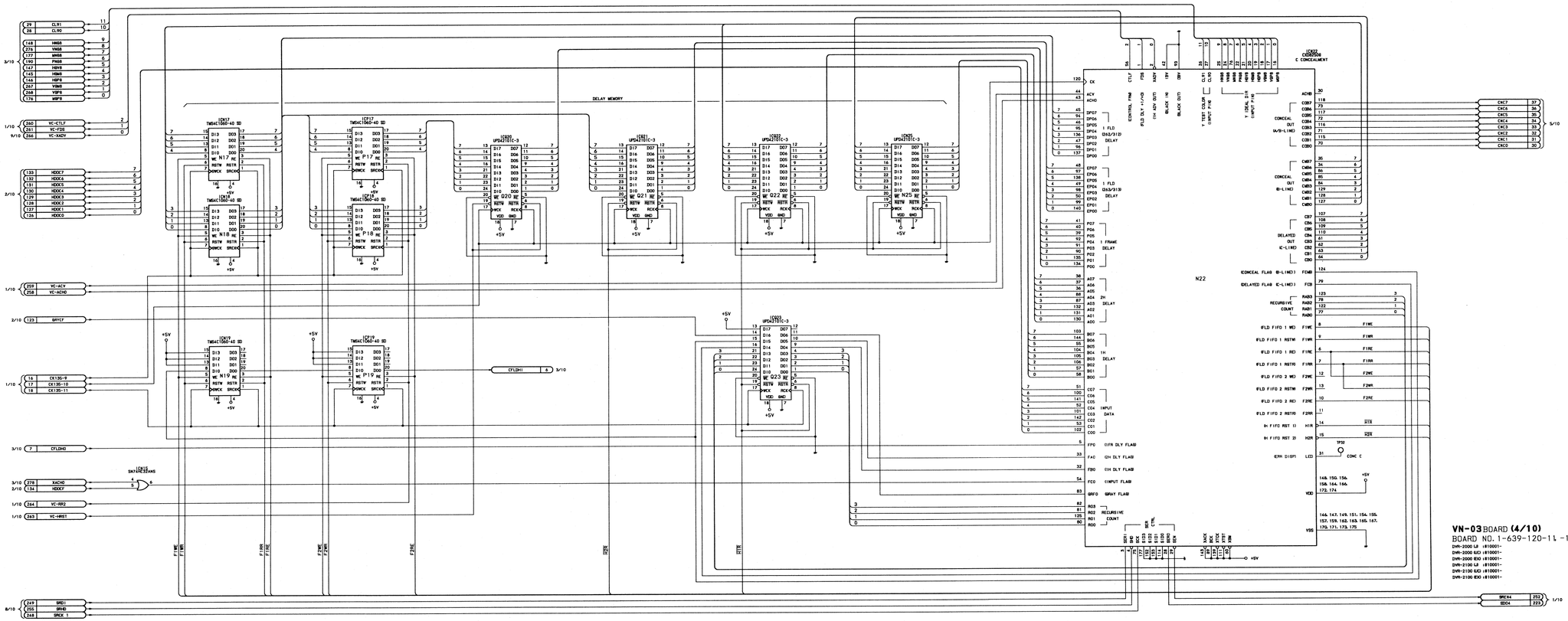

VN-03 BOARD **(4/10)**

BOARD NO. 1-639-120-11 -12

DVR-2000 LJ (#10001-
DVR-2000 EJ (#10001-
DVR-2000 EK (#10001-
DVR-2100 LJ (#10001-
DVR-2100 EJ (#10001-
DVR-2100 EK (#10001-

19-65

CARD RACK VN-03 (5/10) BOARD VN-03 (5/10) BOARD CARD RACK

VN-03 BOARD (5/10)
PB Signal Processor

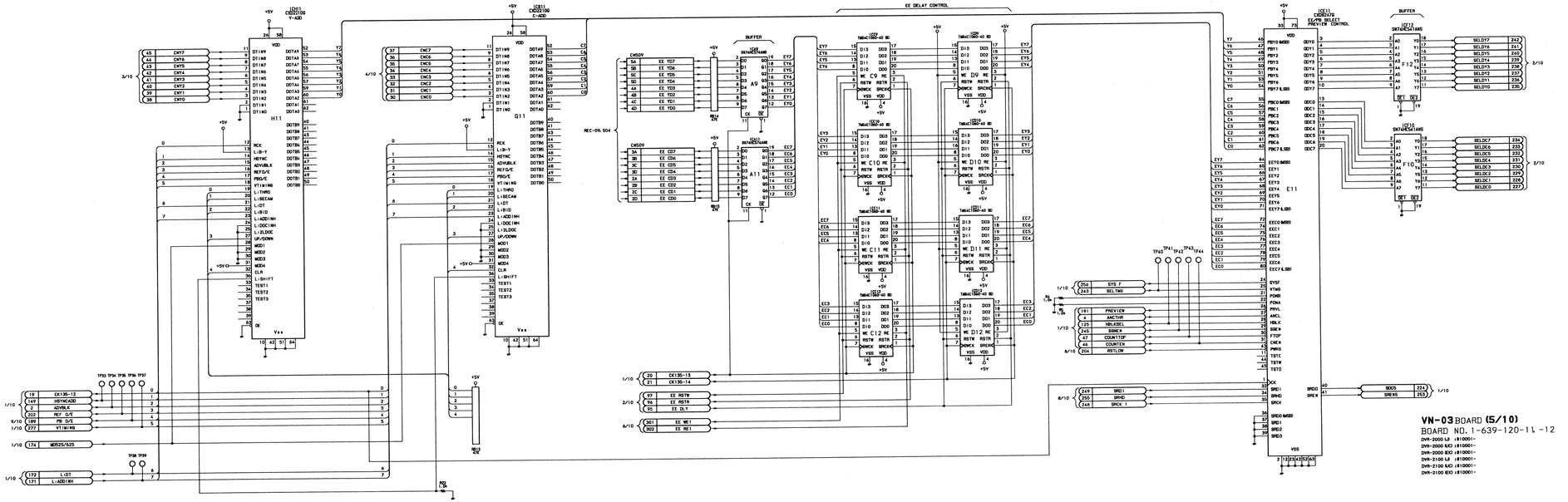

19-67

CARD RACK VN-03 (5/10) BOARD VN-03 (5/10) BOARD CARD RACK

VN-03 BOARD (5/10)

PB Signal Processor

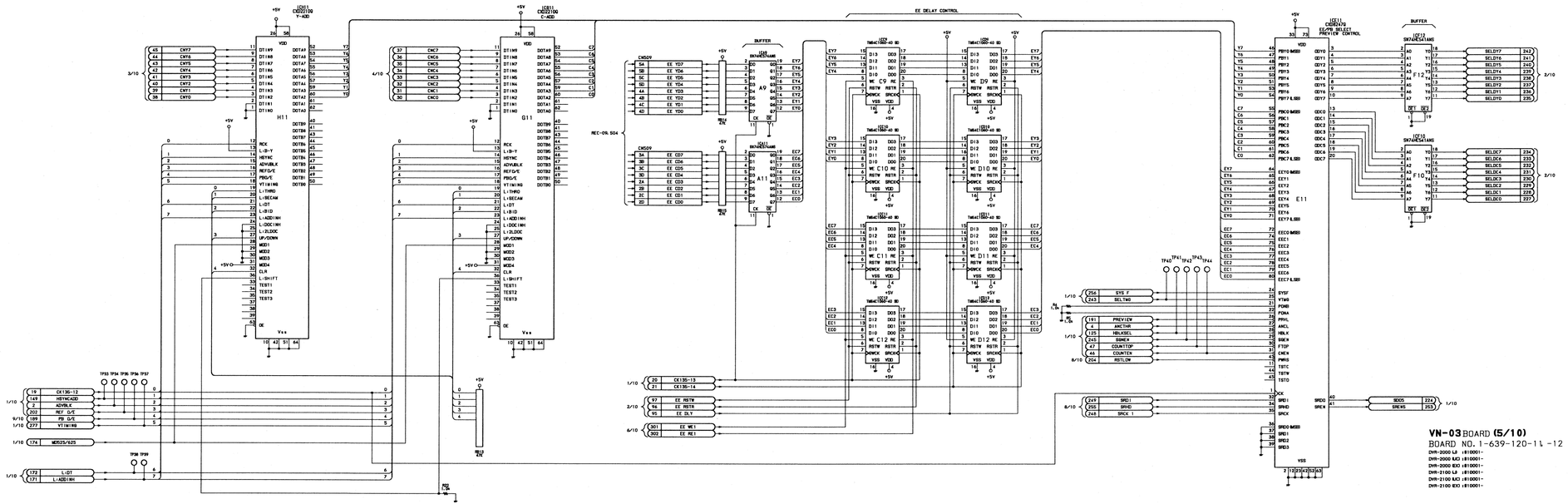

19-67

CARD RACK VN-03 (6/10) BOARD VN-03 (6/10) BOARD CARD RACK

VN-03 BOARD (6/10)

PB Signal Processor

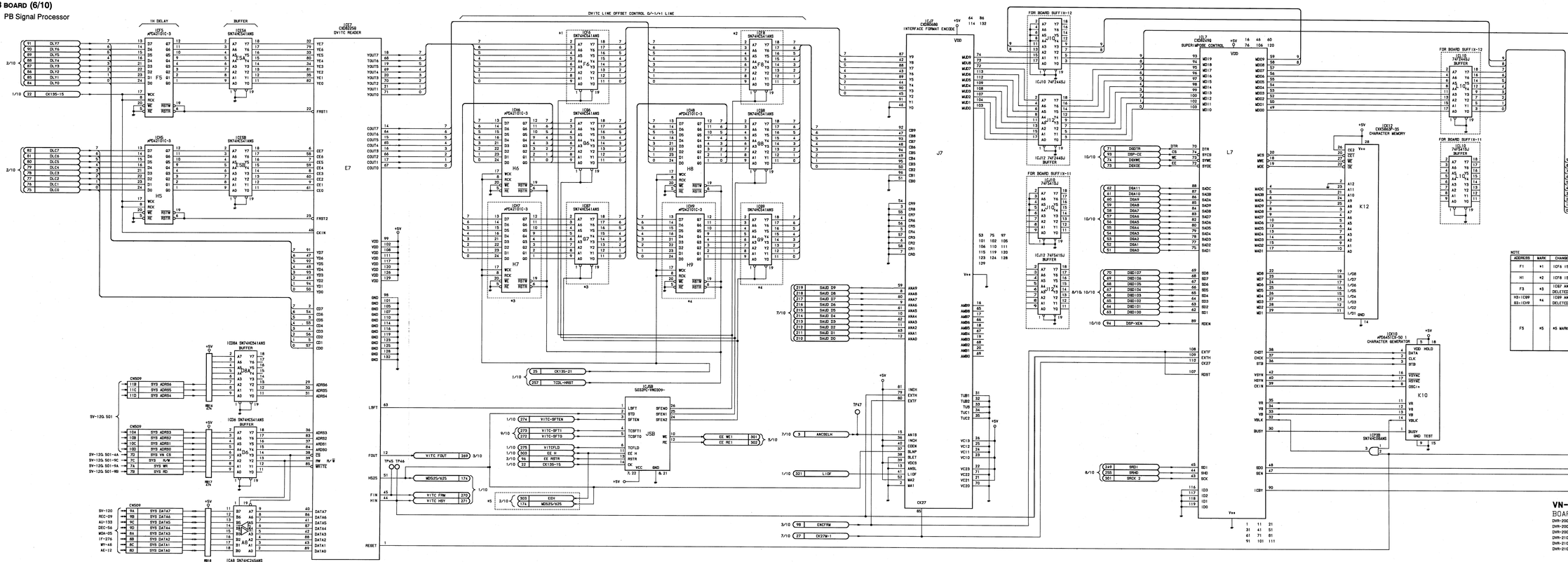

19-69

NOTE			
ADDRESS	MARK	CHANGE INFORMATION	SERIAL NO.
F1	*1	IC F5 IS DELETED.	DVR-2000 J :81B0201- UC:81B0401- EX:81B0701-
H1	*2	IC F5 IS DELETED.	DVR-2100 J :81B0001- UC:81B1101- EX:81B1201-
F3	*3	IC6F AND 1CH7 ARE DELETED.	DVR-2000 J :81B0401- UC:81B0901- EX:81B1201-
H3:1CH9 H3:1CH8	*4	1CH9 AND 1CH8 ARE DELETED.	DVR-2100 J :81B1101- UC:81B1201- EX:81B1201-
F5	*5	*5 MARK IS ADDED.	

VN-03 BOARD (6/10)

BOARD NO. 1-639-120-11 -12

DVR-2000 LJ :81B0001-
DVR-2000 EJ :81B0001-
DVR-2000 EK :81B0001-
DVR-2100 LJ :81B0001-
DVR-2100 EJ :81B0001-
DVR-2100 EK :81B0001-

CARD RACK VN-03 (7/10) BOARD VN-03 (7/10) BOARD CARD RACK

VN-03 BOARD (7/10)

PB Signal Processor

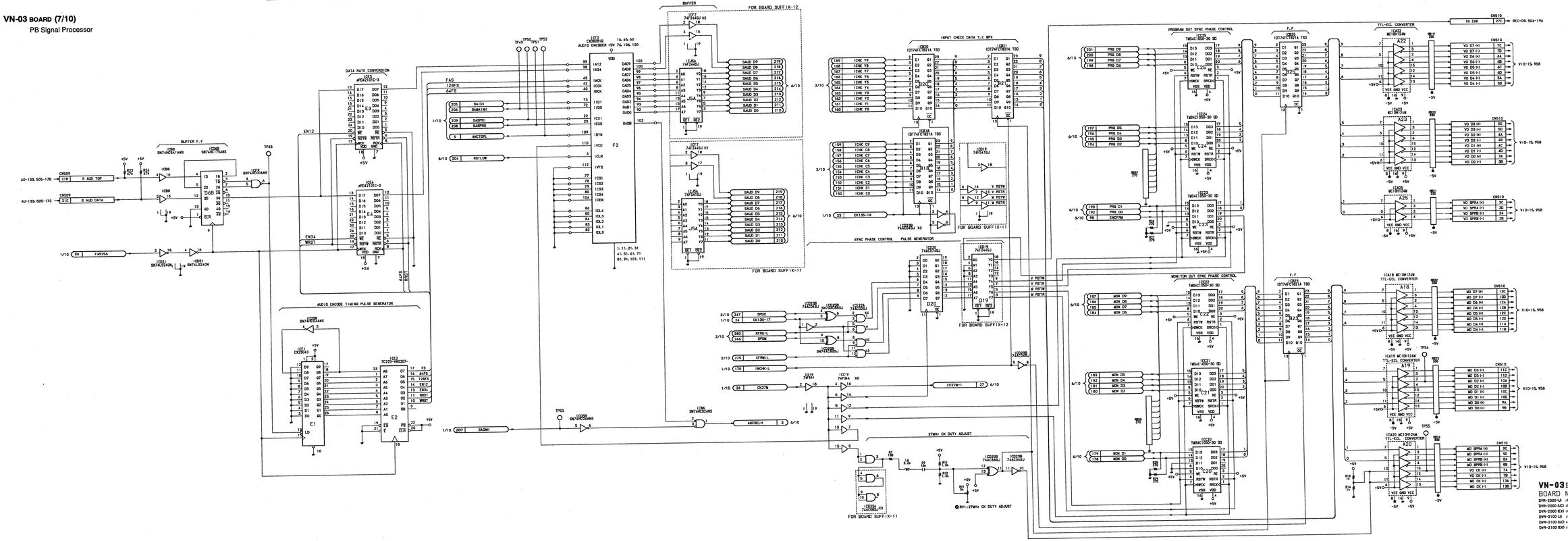

19-71

CARD RACK VN-03 (8/10) BOARD VN-03 (8/10) BOARD CARD RACK

VN-03 BOARD (8/10)

PB Signal Processor

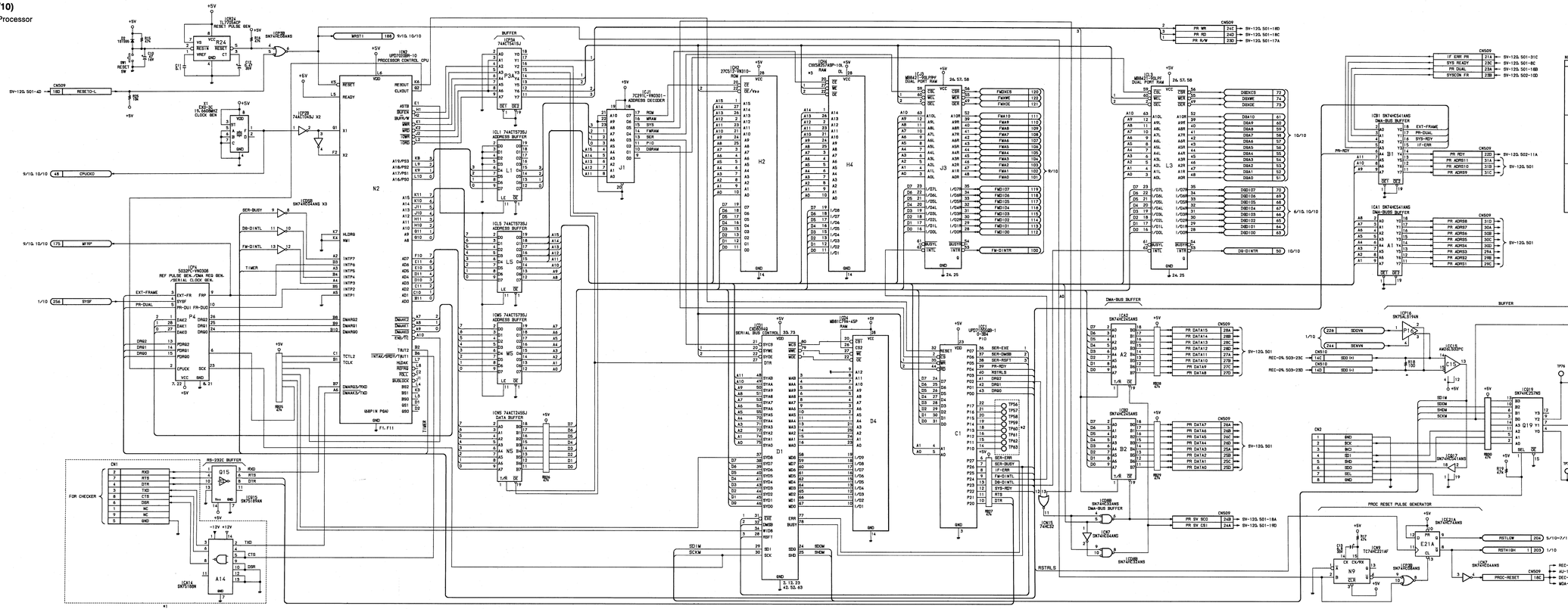

NOTE			
ADDRESS	MARK	CHANGE INFORMATION	SERIAL NO.
C5	#1	CN1 AND IC41A ARE DELETED.	DVR-2000 J :#10201- UC:#10401- EX:#10701- DVR-2100 J :#10601- UC:#11101- EX:#11201-
J4	#2	TP56~TP62 AND TP63 ARE DELETED.	DVR-2000 J :#10201- UC:#10401- EX:#10801- DVR-2100 J :#10601- UC:#11101- EX:#11101-
H1	#3	IC44:CHANGED M56225ACCL→IC44: CX536257AXP-10L	DVR-2000 J :#10401- UC:#11001- EX:#11301- DVR-2100 J :#11101- UC:#11301- EX:#11201-

VN-03 BOARD **(8/10)**

BOARD NO. 1-639-120-11 -12

DVR-2000 LJ :#10001-
DVR-2000 EJ(J) :#10001-
DVR-2000 EX(J) :#10001-
DVR-2100 LJ :#10001-
DVR-2100 EJ(J) :#10001-
DVR-2100 EX(J) :#10001-

19-73

VN-03 (9/10) BOARD CARD RACK

CARD RACK **VN-03 (9/10) BOARD**

VN-03 BOARD (9/10)

PB Signal Processor

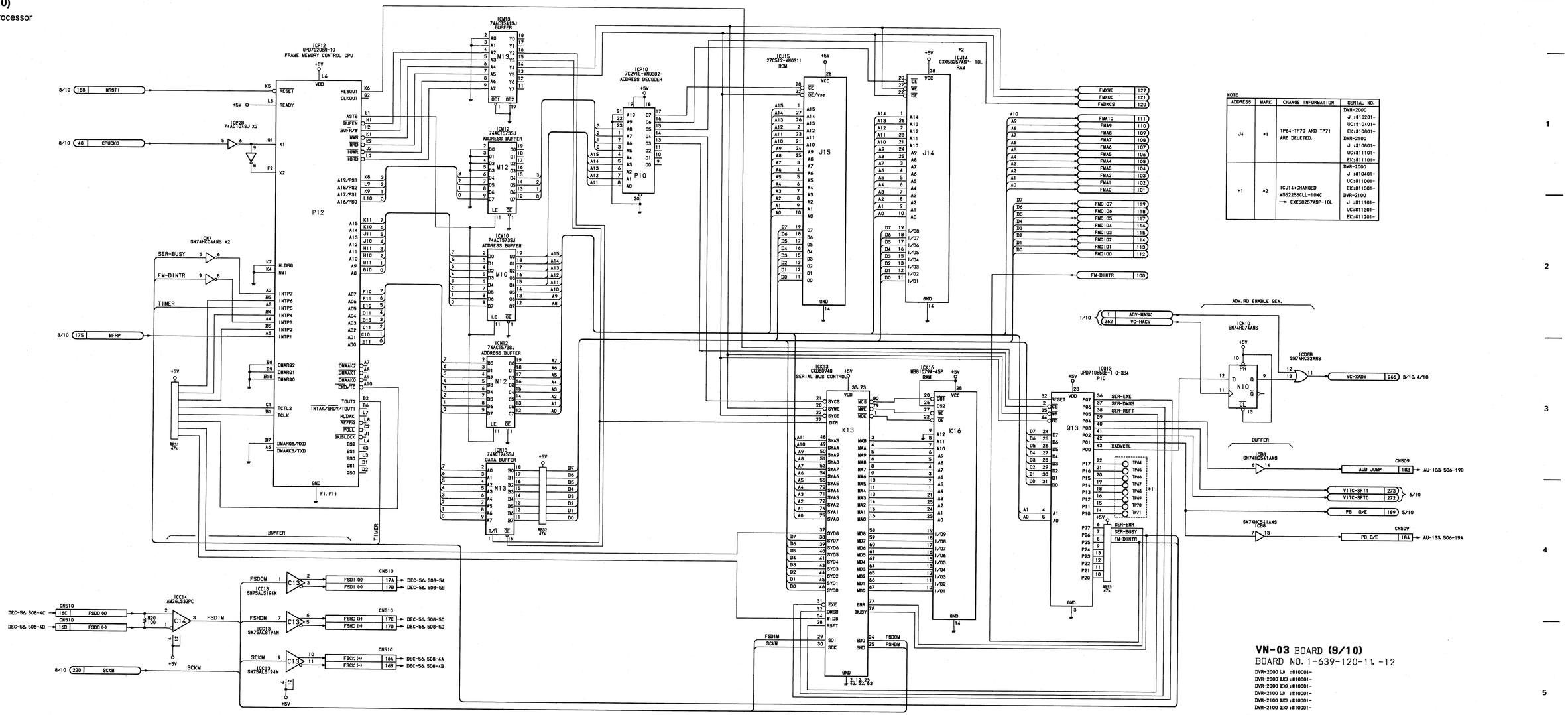

19-75

VN-03 (10/10) BOARD CARD RACK
CARD RACK VN-03 (10/10) BOARD

VN-03 BOARD (10/10)

PB Signal Processor

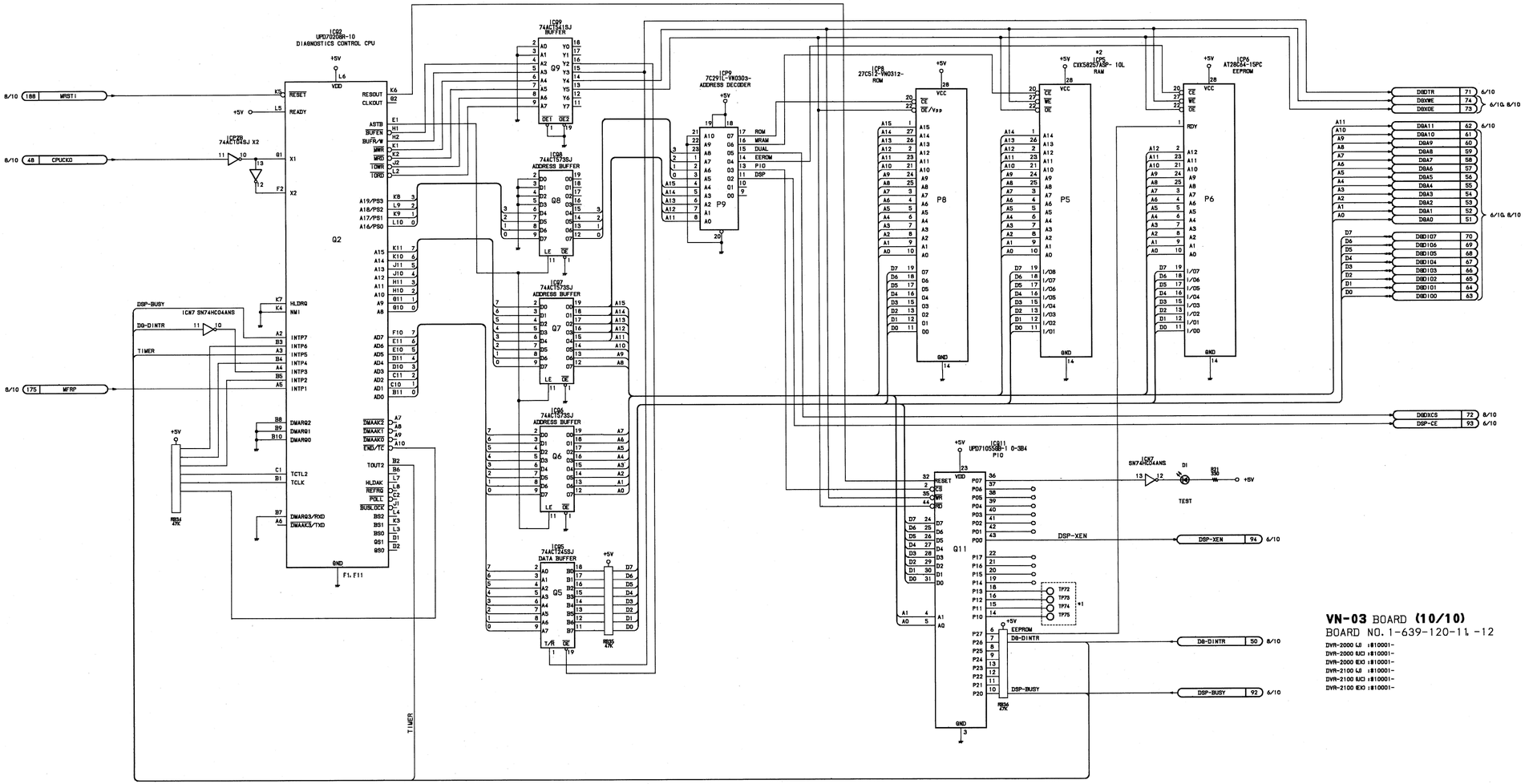

NOTE				
ADDRESS	MARK	CHANGE INFORMATION	SERIAL NO.
H4	*1	TP72-TP74 AND TP75 ARE DELETED.	DVR-2000 J :#10201- UC:#10401- EK:#10801- DVR-2100 J :#10801- UC:#11101- EK:#11101-
H1	*2	ICPS:CHANGED M562256CLL-10NC → CXK58257ASP-10L	DVR-2000 J :#10401- UC:#11001- EK:#11301- DVR-2100 J :#11101- UC:#11301- EK:#11201-

VN-03 BOARD **(10/10)**
BOARD NO. 1-639-120-11, -12

DVR-2000 LJ :#10001-
DVR-2000 EJ/CJ :#10001-
DVR-2000 EK3 :#10001-
DVR-2100 LJ :#10001-
DVR-2100 EJ/CJ :#10001-
DVR-2100 EK3 :#10001-

19-77

DVR-2000	DVR-2100
J : S/N 10101 and higher	J : S/N 10401 and higher
UC : S/N 10101 and higher	UC : S/N 10401 and higher
EK : S/N 10101 and higher	EK : S/N 10401 and higher

CARD RACK AU-133 (1/6) BOARD AU-133 (1/6) BOARD CARD RACK

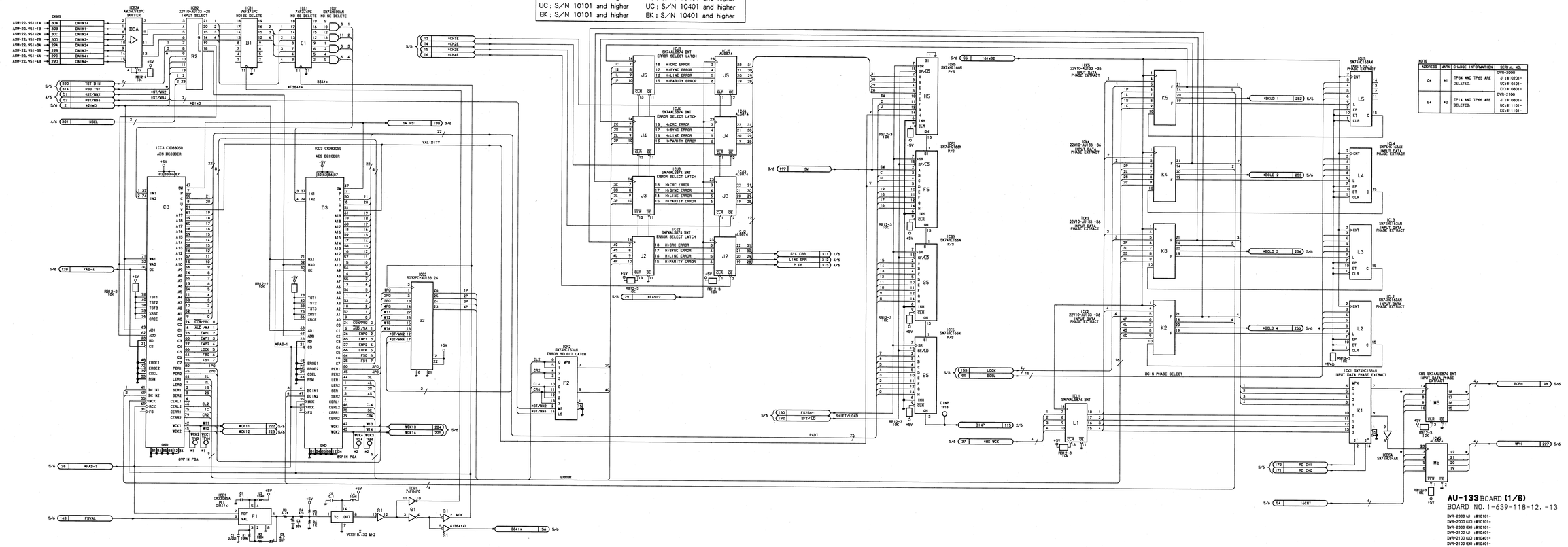
IC26A AN3436,SOPC BUFFER
IC26B 22V10-AU133 -26 INPUT SELECT
IC27 74F374PC NOISE DELETE
IC1 74F374PC NOISE DELETE
IC2 SN74HC534N NOISE DELETE
IC3 CXD8305Q AES DECODER
IC23 CXD8305Q AES DECODER
IC4 SN74AL574 8NT ERROR SELECT LATCH
IC5 SN74HC166N P/S
IC6 SN74HC153AN INPUT DATA PHASE EXTRACT
IC7 SN74AL574 8NT INPUT DATA PHASE EXTRACT
IC8 SN74HC04AN
IC9 CX23035A
IC11 74F00PC
IC12 SN74HC153AN ERROR SELECT LATCH
IC13 SN74HC153AN INPUT DATA PHASE EXTRACT
IC14 SN74HC153AN INPUT DATA PHASE EXTRACT
IC15 SN74HC153AN INPUT DATA PHASE EXTRACT
IC16 SN74HC153AN INPUT DATA PHASE EXTRACT
IC17 SN74HC153AN INPUT DATA PHASE EXTRACT
IC18 SN74HC153AN INPUT DATA PHASE EXTRACT
IC19 SN74HC153AN INPUT DATA PHASE EXTRACT
IC20 SN74HC153AN INPUT DATA PHASE EXTRACT
IC21 SN74HC153AN INPUT DATA PHASE EXTRACT
IC22 SN74HC153AN INPUT DATA PHASE EXTRACT
IC24 SN74HC04AN
IC25 SN74AL574 8NT INPUT DATA PHASE EXTRACT
IC26 SN74HC153AN INPUT DATA PHASE EXTRACT
IC27 SN74HC153AN INPUT DATA PHASE EXTRACT
IC28 SN74HC153AN INPUT DATA PHASE EXTRACT
IC29 SN74HC153AN INPUT DATA PHASE EXTRACT
IC30 SN74HC153AN INPUT DATA PHASE EXTRACT
IC31 SN74HC153AN INPUT DATA PHASE EXTRACT
IC32 SN74HC153AN INPUT DATA PHASE EXTRACT
IC33 SN74HC153AN INPUT DATA PHASE EXTRACT
IC34 SN74HC153AN INPUT DATA PHASE EXTRACT
IC35 SN74AL574 8NT INPUT DATA PHASE EXTRACT
IC36 SN74AL574 8NT INPUT DATA PHASE EXTRACT
IC37 SN74AL574 8NT INPUT DATA PHASE EXTRACT
IC38 SN74AL574 8NT INPUT DATA PHASE EXTRACT
IC39 SN74AL574 8NT INPUT DATA PHASE EXTRACT
IC40 SN74AL574 8NT INPUT DATA PHASE EXTRACT
IC41 SN74AL574 8NT INPUT DATA PHASE EXTRACT
IC42 SN74AL574 8NT INPUT DATA PHASE EXTRACT
IC43 SN74AL574 8NT INPUT DATA PHASE EXTRACT
IC44 SN74AL574 8NT INPUT DATA PHASE EXTRACT
IC45 SN74AL574 8NT INPUT DATA PHASE EXTRACT
IC46 SN74AL574 8NT INPUT DATA PHASE EXTRACT
IC47 SN74AL574 8NT INPUT DATA PHASE EXTRACT
IC48 SN74AL574 8NT INPUT DATA PHASE EXTRACT
IC49 SN74AL574 8NT INPUT DATA PHASE EXTRACT
IC50 SN74AL574 8NT INPUT DATA PHASE EXTRACT
IC51 SN74HC153AN INPUT DATA PHASE EXTRACT
IC52 SN74HC153AN INPUT DATA PHASE EXTRACT
IC53 SN74HC153AN INPUT DATA PHASE EXTRACT
IC54 SN74HC153AN INPUT DATA PHASE EXTRACT
IC55 SN74AL574 8NT INPUT DATA PHASE EXTRACT
IC56 SN74AL574 8NT INPUT DATA PHASE EXTRACT
IC57 SN74AL574 8NT INPUT DATA PHASE EXTRACT
IC58 SN74AL574 8NT INPUT DATA PHASE EXTRACT
IC59 SN74AL574 8NT INPUT DATA PHASE EXTRACT
IC60 SN74AL574 8NT INPUT DATA PHASE EXTRACT
IC61 SN74AL574 8NT INPUT DATA PHASE EXTRACT
IC62 SN74AL574 8NT INPUT DATA PHASE EXTRACT
IC63 SN74AL574 8NT INPUT DATA PHASE EXTRACT
IC64 SN74AL574 8NT INPUT DATA PHASE EXTRACT
IC65 SN74AL574 8NT INPUT DATA PHASE EXTRACT
IC66 SN74AL574 8NT INPUT DATA PHASE EXTRACT
IC67 SN74AL574 8NT INPUT DATA PHASE EXTRACT
IC68 SN74AL574 8NT INPUT DATA PHASE EXTRACT
IC69 SN74AL574 8NT INPUT DATA PHASE EXTRACT
IC70 SN74AL574 8NT INPUT DATA PHASE EXTRACT
IC71 SN74AL574 8NT INPUT DATA PHASE EXTRACT
IC72 SN74AL574 8NT INPUT DATA PHASE EXTRACT
IC73 SN74AL574 8NT INPUT DATA PHASE EXTRACT
IC74 SN74AL574 8NT INPUT DATA PHASE EXTRACT
IC75 SN74AL574 8NT INPUT DATA PHASE EXTRACT
IC76 SN74AL574 8NT INPUT DATA PHASE EXTRACT
IC77 SN74AL574 8NT INPUT DATA PHASE EXTRACT
IC78 SN74AL574 8NT INPUT DATA PHASE EXTRACT
IC79 SN74AL574 8NT INPUT DATA PHASE EXTRACT
IC80 SN74AL574 8NT INPUT DATA PHASE EXTRACT
IC81 SN74AL574 8NT INPUT DATA PHASE EXTRACT
IC82 SN74AL574 8NT INPUT DATA PHASE EXTRACT
IC83 SN74AL574 8NT INPUT DATA PHASE EXTRACT
IC84 SN74AL574 8NT INPUT DATA PHASE EXTRACT
IC85 SN74AL574 8NT INPUT DATA PHASE EXTRACT
IC86 SN74AL574 8NT INPUT DATA PHASE EXTRACT
IC87 SN74AL574 8NT INPUT DATA PHASE EXTRACT
IC88 SN74AL574 8NT INPUT DATA PHASE EXTRACT
IC89 SN74AL574 8NT INPUT DATA PHASE EXTRACT
IC90 SN74AL574 8NT INPUT DATA PHASE EXTRACT
IC91 SN74AL574 8NT INPUT DATA PHASE EXTRACT
IC92 SN74AL574 8NT INPUT DATA PHASE EXTRACT
IC93 SN74AL574 8NT INPUT DATA PHASE EXTRACT
IC94 SN74AL574 8NT INPUT DATA PHASE EXTRACT
IC95 SN74AL574 8NT INPUT DATA PHASE EXTRACT
IC96 SN74AL574 8NT INPUT DATA PHASE EXTRACT
IC97 SN74AL574 8NT INPUT DATA PHASE EXTRACT
IC98 SN74AL574 8NT INPUT DATA PHASE EXTRACT
IC99 SN74AL574 8NT INPUT DATA PHASE EXTRACT
IC100 SN74AL574 8NT INPUT DATA PHASE EXTRACT
IC101 SN74HC153AN INPUT DATA PHASE EXTRACT
IC102 SN74HC153AN INPUT DATA PHASE EXTRACT
IC103 SN74HC153AN INPUT DATA PHASE EXTRACT
IC104 SN74HC153AN INPUT DATA PHASE EXTRACT
IC105 SN74HC153AN INPUT DATA PHASE EXTRACT
IC106 SN74HC153AN INPUT DATA PHASE EXTRACT

AU-133 BOARD (1/6)

Audio Signal Processor

CARD RACK **AU-133 (1/6) BOARD** — **AU-133 (1/6) BOARD** CARD RACK

DVR-2000	DVR-2100
J : S/N 10001 through 10099	J : S/N 10001 through 10399
UC : S/N 10001 through 10099	UC : S/N 10001 through 10399
EK : S/N 10001 through 10099	EK : S/N 10001 through 10399

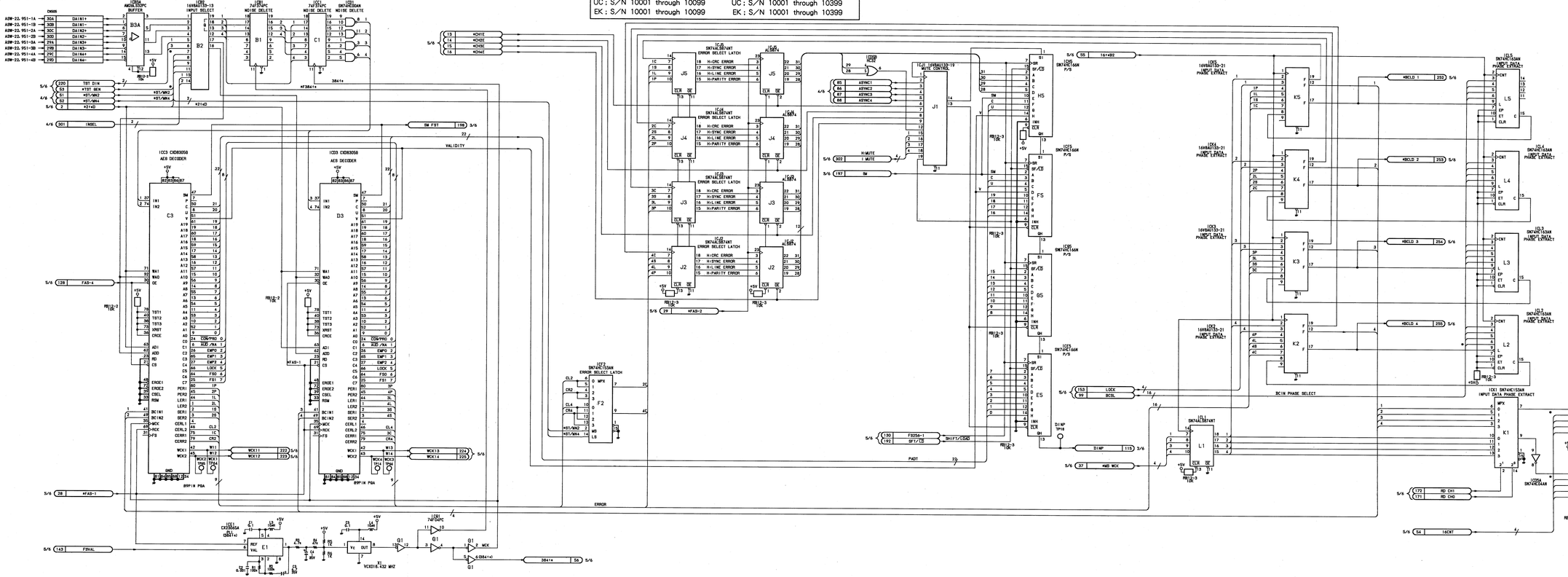

AU-133 BOARD **(1/6)**
BOARD NO. 1-639-118-11
DVR-2000 LU :#10001~10099
DVR-2000 UCJ :#10001~10099
DVR-2000 EQU :#10001~10099
DVR-2100 LU :#10001~10399
DVR-2100 UCJ :#10001~10399
DVR-2100 EQU :#10001~10399

19-79 (a)

19-79 (a)

DVR-2000	DVR-2100
J : S/N 10101 and higher	J : S/N 10401 and higher
UC : S/N 10101 and higher	UC : S/N 10401 and higher
EK : S/N 10101 and higher	EK : S/N 10401 and higher

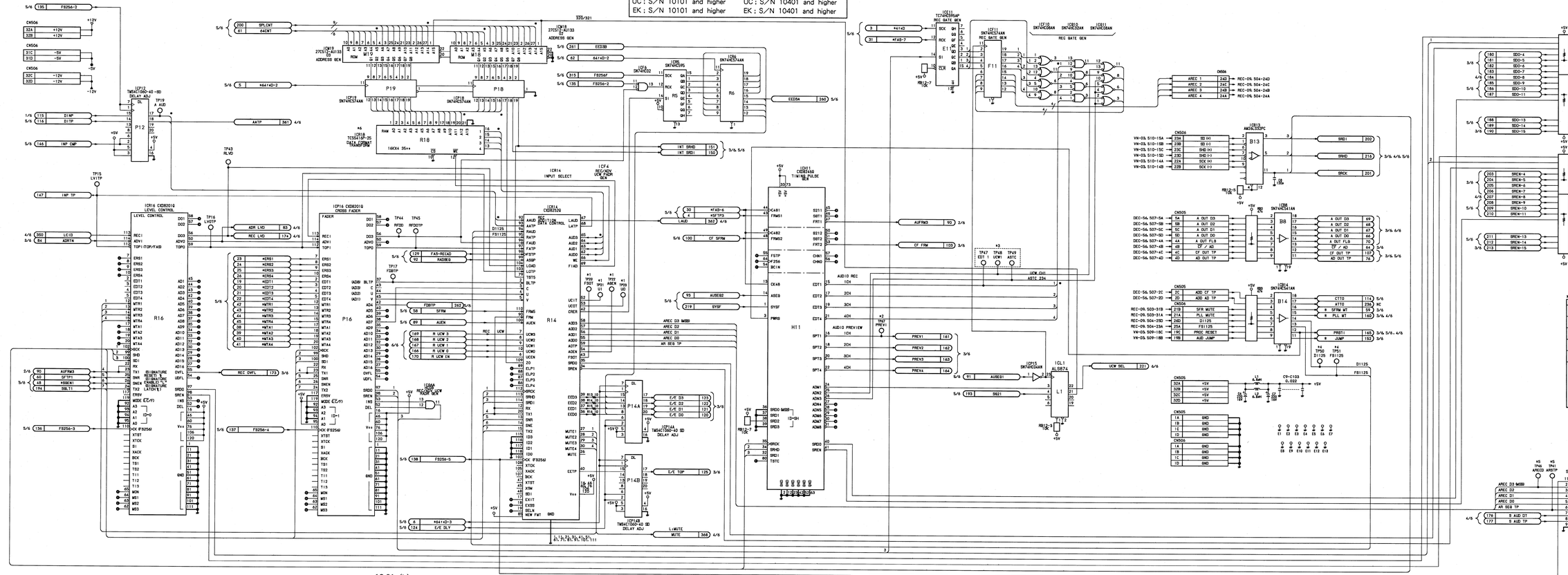
CN506
CN505
CN506
CN506
CN505
CN505
CN505
CN505
CN506
CN506
CN506

DVR-2000	DVR-2100
J : S/N 10001 through 10099	J : S/N 10001 through 10399
UC : S/N 10001 through 10099	UC : S/N 10001 through 10399
EK : S/N 10001 through 10099	EK : S/N 10001 through 10399

CARD RACK AU-133 (2/6) BOARD AU-133 (2/6) BOARD CARD RACK

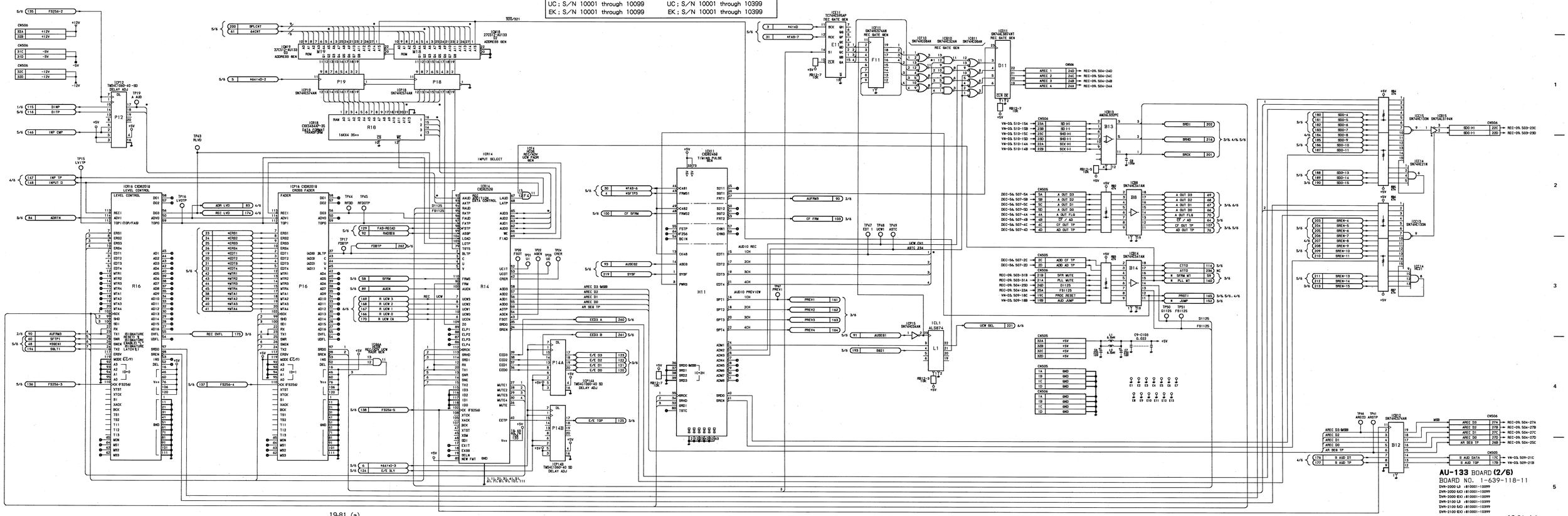

AU-133 BOARD (3/6)

Audio Signal Processor

DVR-2000	DVR-2100
J ; S/N 10101 and higher	J ; S/N 10401 and higher
UC ; S/N 10101 and higher	UC ; S/N 10401 and higher
EK ; S/N 10101 and higher	EK ; S/N 10401 and higher

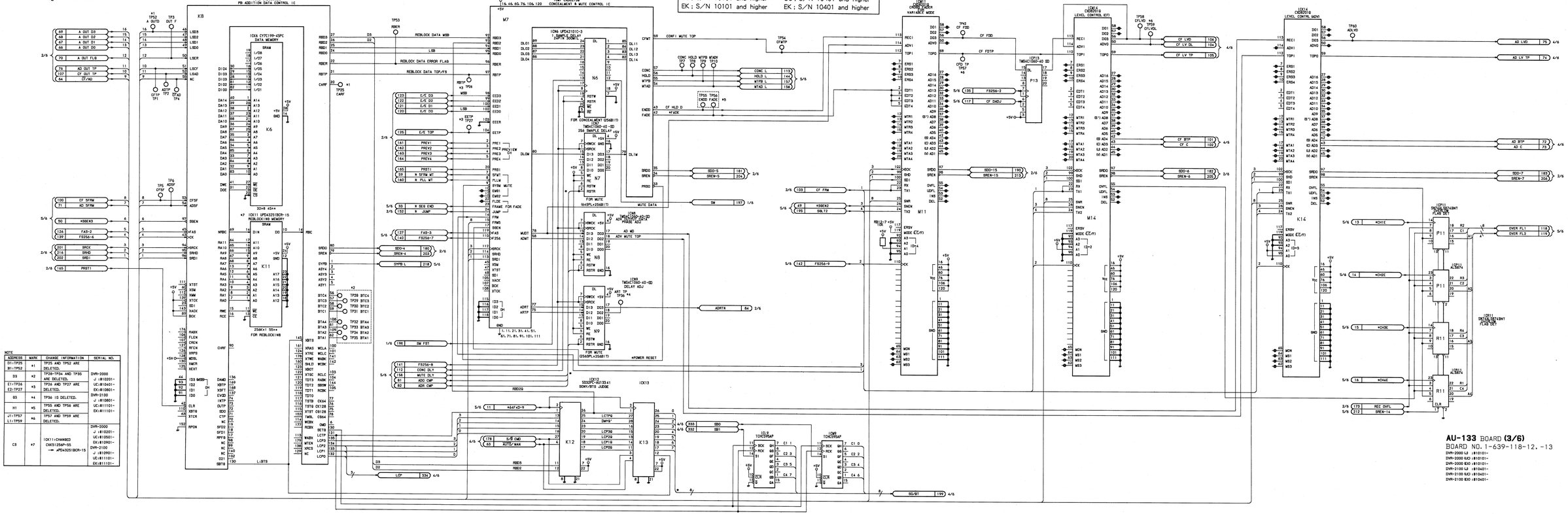
IC65 CXD2538Q
PB ADDITION DATA CONTROL IC
IC66 CY7C199-45PC
DATA MEMORY
SRAM
IC11 UPD43257B3CR-15
REBLOCKING MEMORY
SRAM
IC67 CXD2372Q
CONCEALMENT & MUTE CONTROL IC
IC66 UPD4201C-3
1-SAMPLE DELAY
2-SAMPLE DELAY
IC61 CXD2372Q
VARI-SPEED
VARI-RATE MODE
IC14 CXD2372Q
LEVEL CONTROL (EF)
IC14 CXD2372Q
LEVEL CONTROL (ADV)
IC12 SG3270C-AU13341
SONY/RTS JUDGE
IC13
IC10 TC74HC595AP
IC9 TC74HC595AP
IC8 TC74HC595AP
IC7 TC74HC595AP
IC6 TC74HC595AP
IC5 TC74HC595AP
IC4 TC74HC595AP
IC3 TC74HC595AP
IC2 TC74HC595AP
IC1 TC74HC595AP
IC13 TC74HC595AP
IC12 TC74HC595AP
IC11 TC74HC595AP

AU-133 BOARD (3/6)

Audio Signal Processor

DVR-2000	DVR-2100
J ; S/N 10001 through 10099	J ; S/N 10001 through 10399
UC ; S/N 10001 through 10099	UC ; S/N 10001 through 10399
EK ; S/N 10001 through 10099	EK ; S/N 10001 through 10399

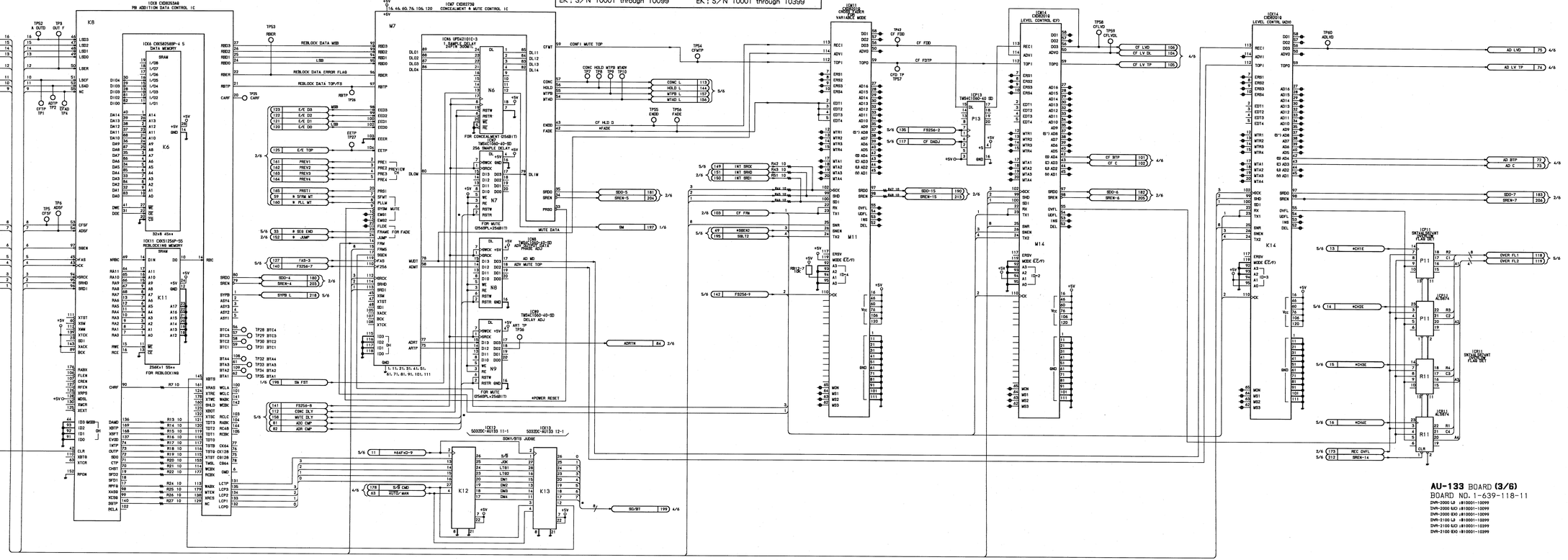

AU-133 BOARD **(3/6)**
BOARD NO. 1-639-118-11
DVR-2000 UJ :#10001-10099
DVR-2000 EJ :#10001-10099
DVR-2000 EK :#10001-10099
DVR-2100 UJ :#10001-10399
DVR-2100 EJ :#10001-10399
DVR-2100 EK :#10001-10399

19-83 (a)

CARD RACK AU-133 (4/6) BOARD AU-133 (4/6) BOARD CARD RACK

AU-133 BOARD (4/6)

Audio Signal Processor

DVR-2000	DVR-2100
J ; S/N 10101 and higher	J ; S/N 10401 and higher
UC ; S/N 10101 and higher	UC ; S/N 10401 and higher
EK ; S/N 10101 and higher	EK ; S/N 10401 and higher

NOTE

ADDRESS	MARK	CHANGE INFORMATION	SERIAL NO.
L4	+1	TP4L-TP62 AND TP63 ARE DELETED.	DVR-2000 J :810201- UC:810401- EK:810601- DVR-2100 J :810801- UC:811101- EK:811101-

TST1	TST2	MODE
ON	ON	BTS (MANUAL)
ON	OFF	SONY (MANUAL)
OFF	ON/OFF	AUTO

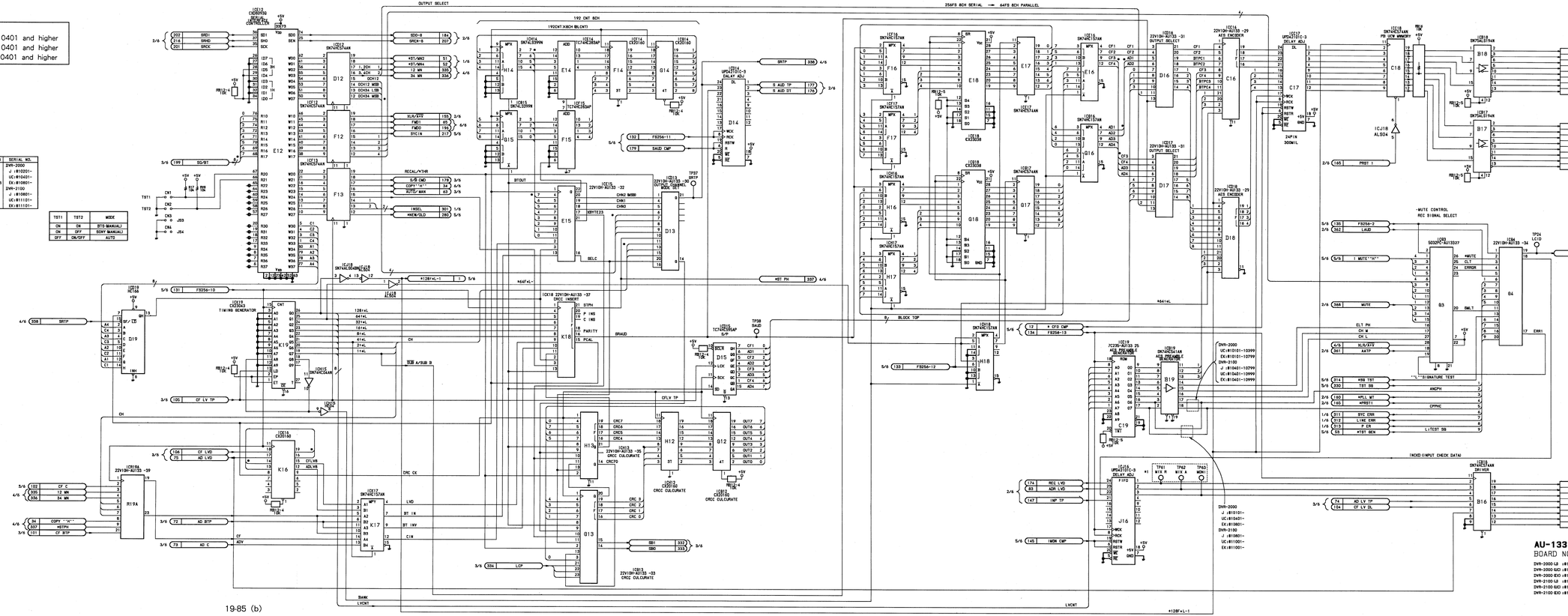

AU-133 BOARD **(4/6)**

BOARD NO. 1-639-118-12, -13

DVR-2000 LB :810101-
DVR-2000 EXD :810101-
DVR-2000 EKD :810101-
DVR-2100 LB :810401-
DVR-2100 EXD :810401-
DVR-2100 EKD :810401-

19-85 (b)

CARD RACK AU-133 (4/6) BOARD AU-133 (4/6) BOARD CARD RACK

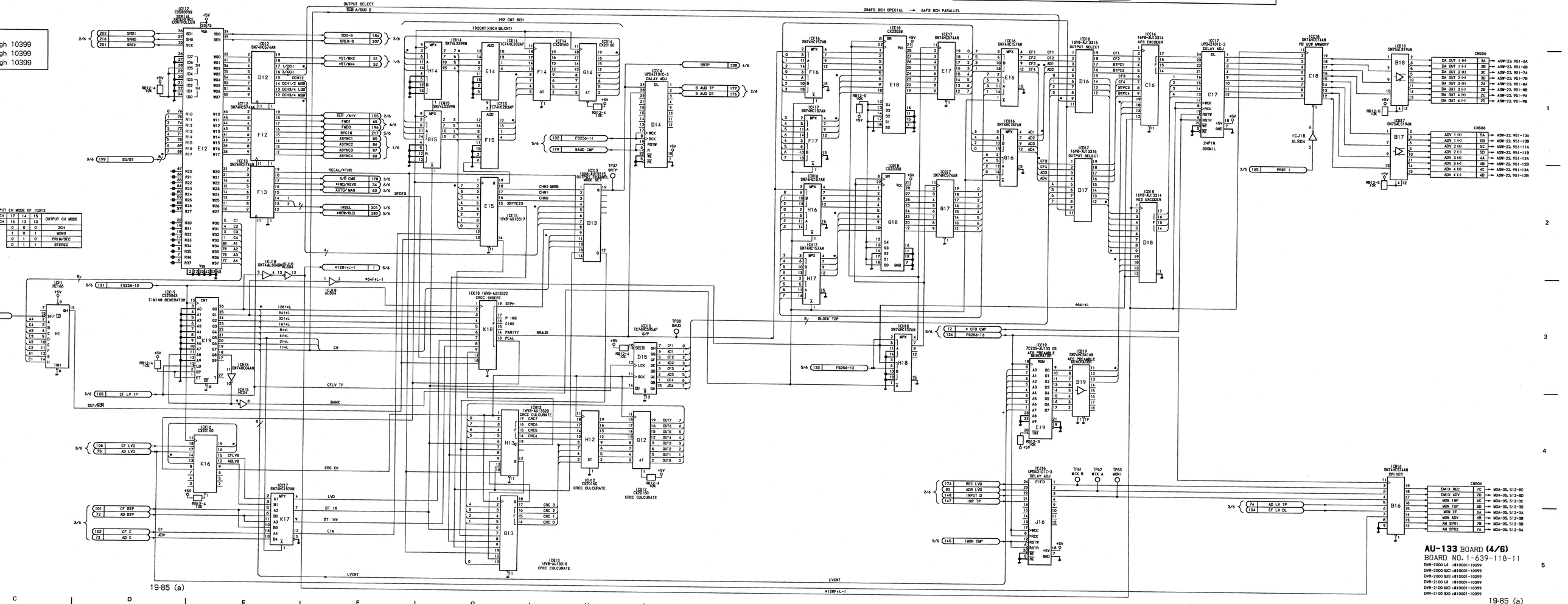

CARD RACK AU-133 (4/6) BOARD AU-133 (4/6) BOARD CARD RACK

AU-133 BOARD (4/6)

Audio Signal Processor

DVR:2000	DVR:2100
J ; S/N 10001 through 10099	J ; S/N 10001 through 10399
UC ; S/N 10001 through 10099	UC ; S/N 10001 through 10399
EK ; S/N 10001 through 10099	EK ; S/N 10001 through 10399

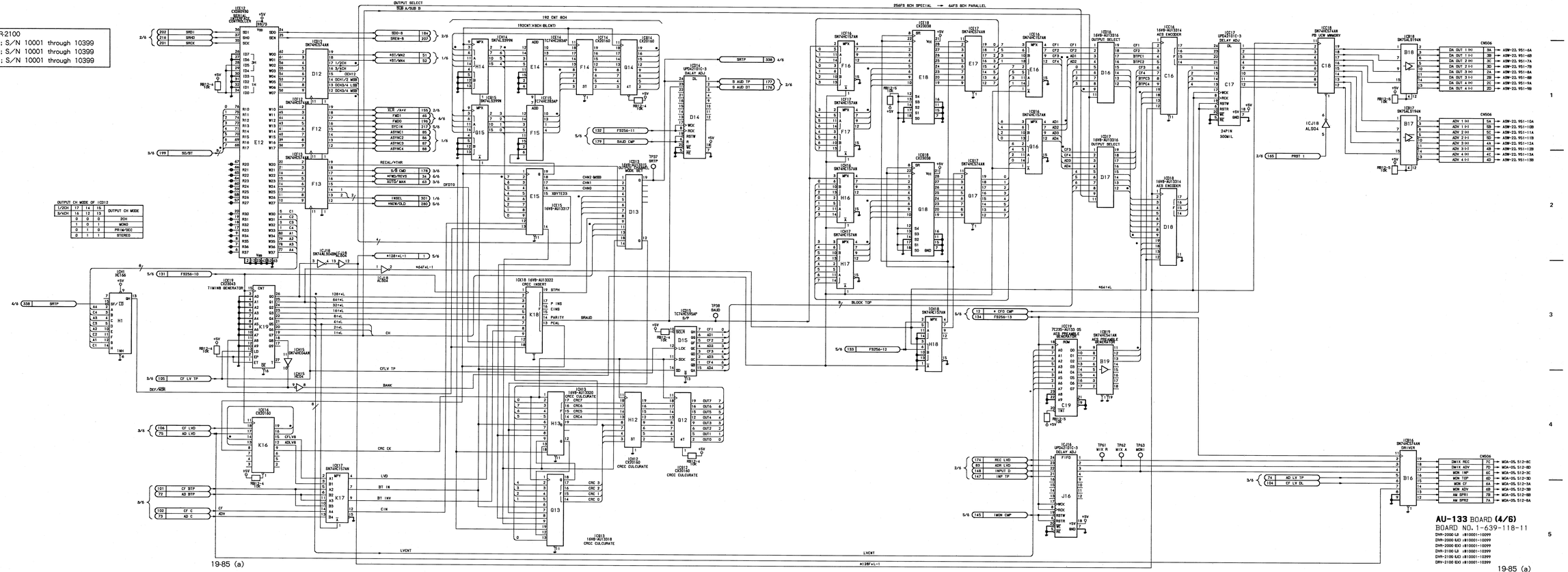

CARD RACK AU-133 (5/6) BOARD AU-133 (5/6) BOARD CARD RACK

AU-133 BOARD (5/6)

Audio Signal Processor

DVR-2000	DVR-2100
J : S/N 10101 and higher	J : S/N 10401 and higher
UC : S/N 10101 and higher	UC : S/N 10401 and higher
EK : S/N 10101 and higher	EK : S/N 10401 and higher

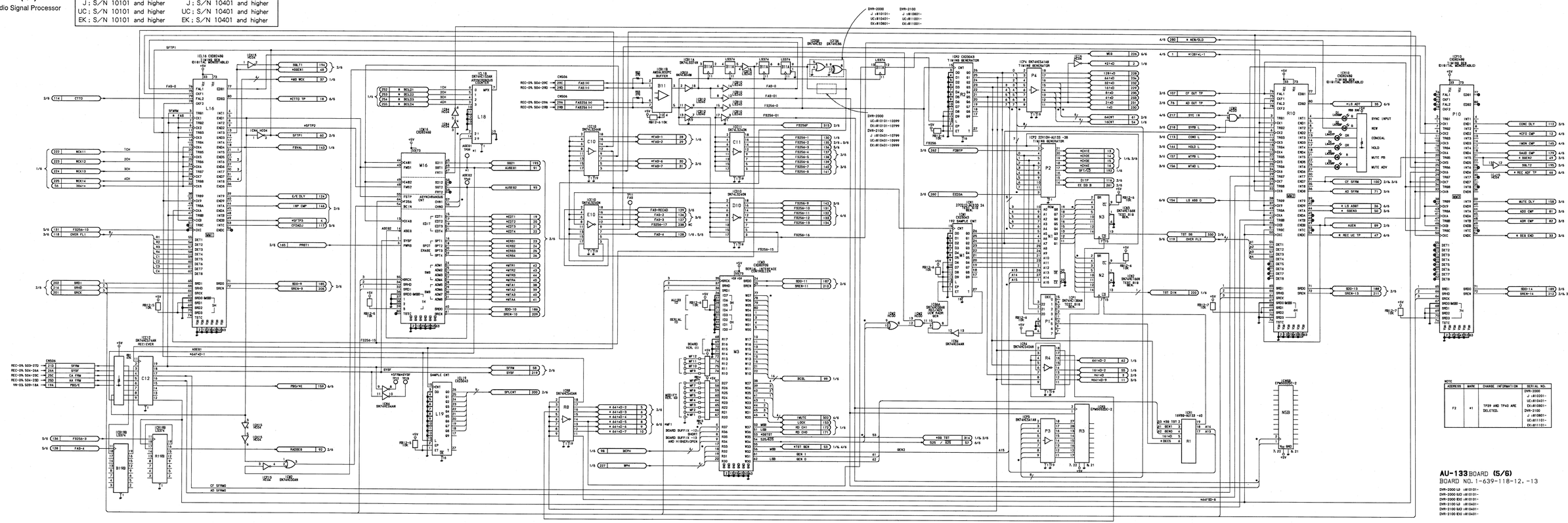
DVR-2000
J :#10101-
UC:#10401-
EK:#10601-
DVR-2100
J :#10801-
UC:#11101-
EK:#11301-
DVR-2000
UC:#10101-:#10399
EK:#10101-:#10799
DVR-2100
UC:#10401-:#10999
EK:#10401-:#10999
DVR-2000
J :#10401-:#10799
UC:#10601-:#10999
EK:#10601-:#10999
IC L16 CXD2249
IC L18 CXD2249
IC M16 CXD2249
IC B11 M51953B-2
IC C11 SN74LS374
IC C10 SN74LS374
IC D10 SN74LS374
IC M3 CXD2249
IC P4 SN74HC541AB
IC P2 SN74HC541AB
IC P3 SN74HC541AB
IC R4 SN74HC541AB
IC R3 EPM7032SC-2
IC R1 14F89-A0139
IC R10 CXD2249
IC P10 CXD2249
IC C12 SN74HC244AN
IC R8 SN74HC244AN
IC N2 SN74HC168AN
IC N3 SN74HC168AN
IC M1 CXD2249
IC L19 CXD2249
IC L14 CXD2249
IC L15 CXD2249
IC L17 CXD2249
IC L13 CXD2249
IC L12 CXD2249
IC L11 CXD2249
IC L10 CXD2249
IC L9 CXD2249
IC L8 CXD2249
IC L7 CXD2249
IC L6 CXD2249
IC L5 CXD2249
IC L4 CXD2249
IC L3 CXD2249
IC L2 CXD2249
IC L1 CXD2249
IC N1 EPM7032SC-2
IC N5B EPM7032SC-2
IC P1 SN74HC541AB
IC P5 SN74HC541AB
IC P6 SN74HC541AB
IC P7 SN74HC541AB
IC P8 SN74HC541AB
IC P9 SN74HC541AB
IC P11 SN74HC541AB
IC P12 SN74HC541AB
IC P13 SN74HC541AB
IC P14 SN74HC541AB
IC P15 SN74HC541AB
IC P16 SN74HC541AB
IC P17 SN74HC541AB
IC P18 SN74HC541AB
IC P19 SN74HC541AB
IC P20 SN74HC541AB
IC P21 SN74HC541AB
IC P22 SN74HC541AB
IC P23 SN74HC541AB
IC

CARD RACK AU-133 (5/6) BOARD AU-133 (5/6) BOARD CARD RACK

AU-133 BOARD (5/6)

Audio Signal Processor

DVR-2000	DVR-2100
J : S/N 10001 through 10099	J : S/N 10001 through 10399
UC : S/N 10001 through 10099	UC : S/N 10001 through 10399
EK : S/N 10001 through 10099	EK : S/N 10001 through 10399

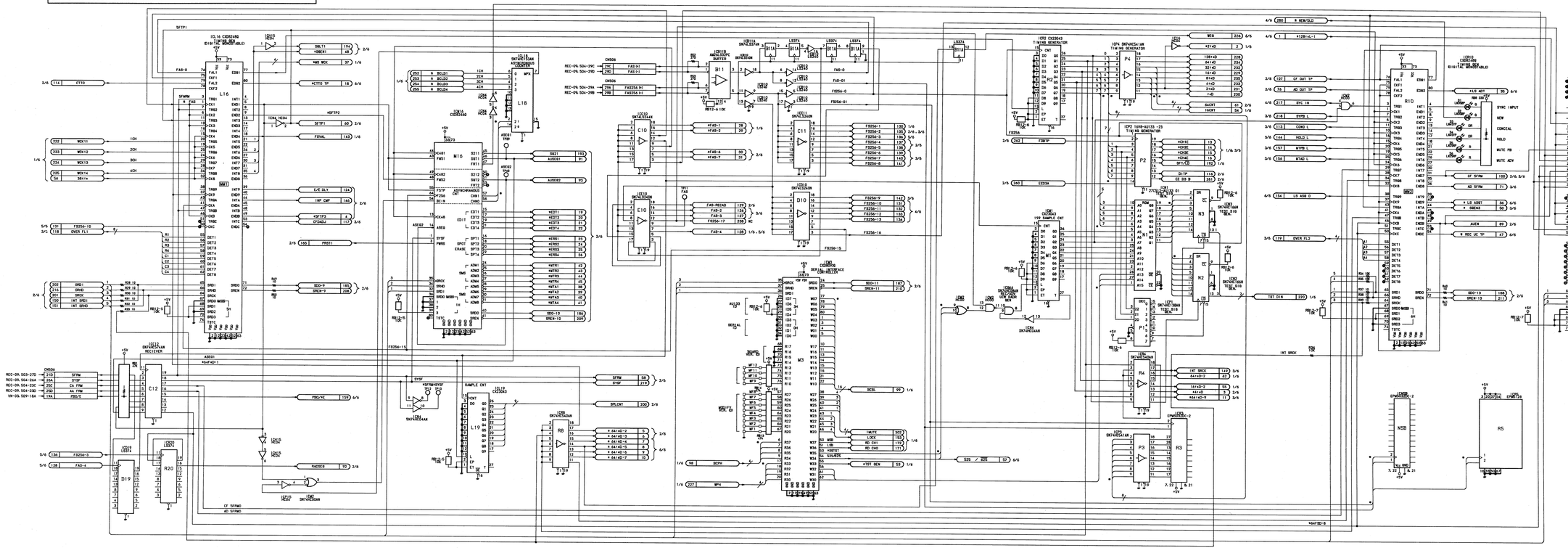

AU-133 BOARD (5/6)
BOARD NO. 1-639-118-11

DVR-2000 LA : #10001~10099
DVR-2000 EK1 : #10001~10099
DVR-2000 EK2 : #10001~10099
DVR-2100 LA : #10001~10399
DVR-2100 EK1 : #10001~10399
DVR-2100 EK2 : #10001~10399

19-87 (a)

CARD RACK AU-133 (6/6) BOARD

AU-133 BOARD (6/6)

Audio Signal Processor

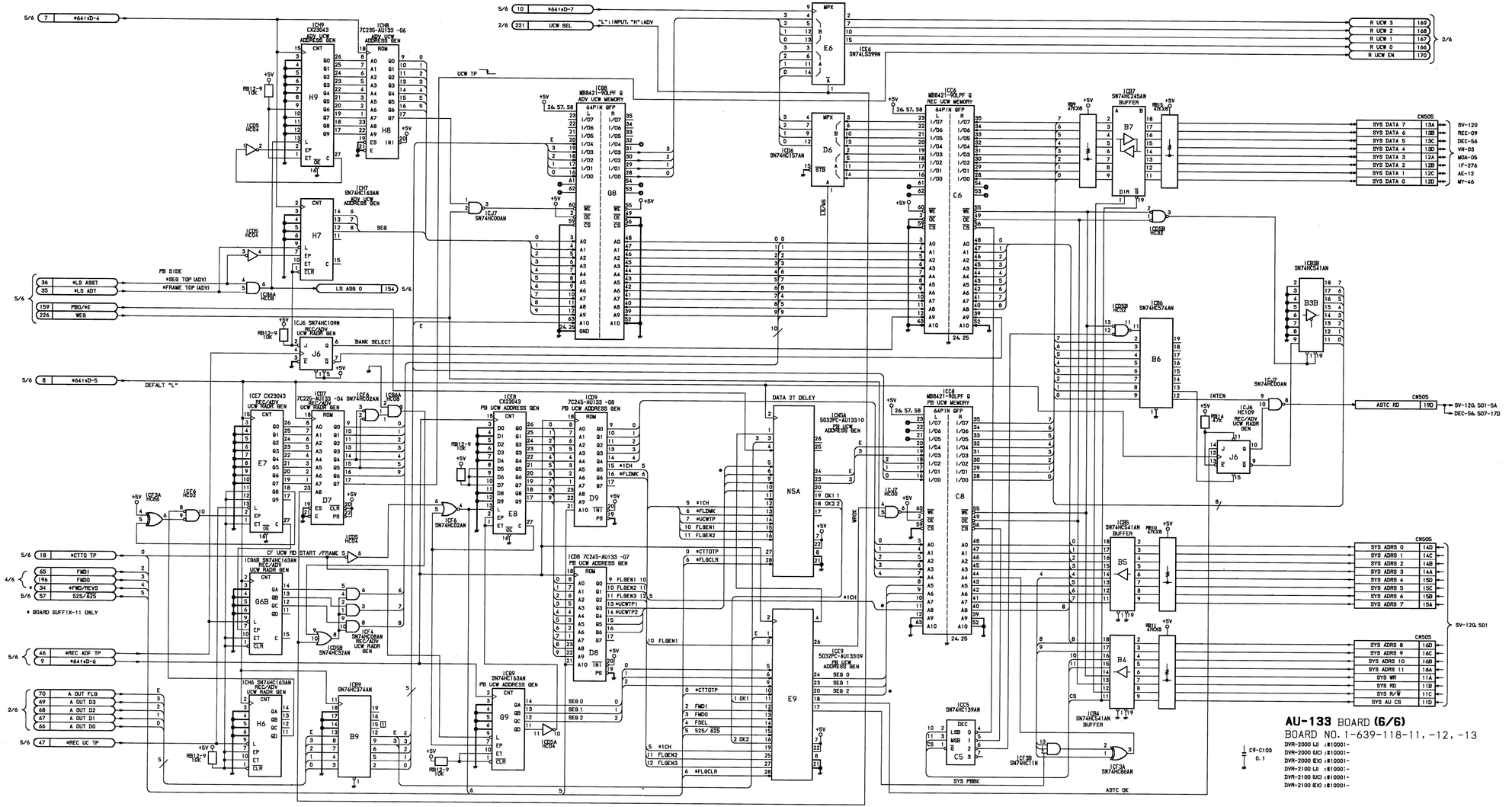

19-89

AE-12 (1/2) BOARD CARD RACK

CARD RACK **AE-12 (1/2) BOARD**

AE-12 BOARD (1/2)

Longitudinal Processor

NOTE

ADDRESS	MARK	CHANGED INFORMATION	SERIAL NO.
D4	*1	IC200 AND C209 ARE DELETED.	
D4	*2	IC202 AND C214 ARE DELETED.	DVR-2000 J :#10201- UC:#10301- EK:#10601-
I1	*3	C115 AND C116 ARE DELETED.	DVR-2100 J :#11001- UC:#11101- EK:#11101-
J1	*4	JP1, JP2, JS1 AND C150 ARE ADDED.	
I4	*5	C134 AND C135 ARE DELETED.	
J4	*6	JP3, JP4, JS2 AND C151 ARE ADDED.	
B4	*7	C103 AND C104 ARE DELETED.	
F1	*8	C136, C137:CHANGED 0.1→0.022	DVR-2000 J :#10201- UC:#10401- EK:#10801-
D3	*9	C202, C205, C208: CHANGED 0.1→0.022	DVR-2100 J :#10801- UC:#11101- EK:#11101-
D4	*10	C213:CHANGED 0.1→0.022	
B3	*11	C258 AND C259 ARE DELETED.	
D4	*12	IC201:CHANGED RC78L09A→NJM78L06A	

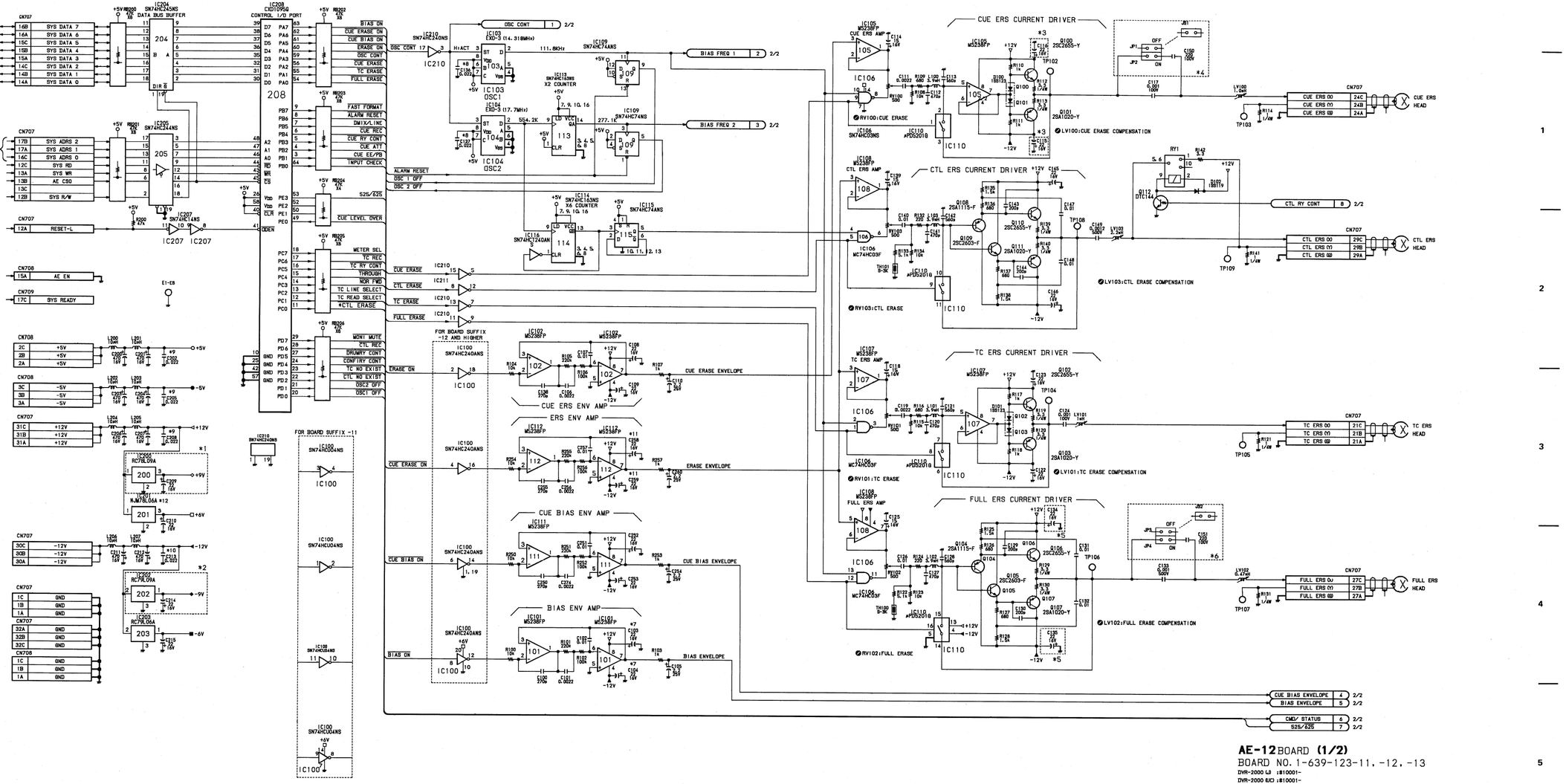

AE-12 BOARD **(1/2)**

BOARD NO. 1-639-123-11, -12, -13

DVR-2000 LJ :#10001-
DVR-2000 UJC :#10001-
DVR-2000 EKO :#10001-
DVR-2100 LJ :#10001-
DVR-2100 UJC :#10001-
DVR-2100 EKO :#10001-

DUS-481 CARD RACK **AE-12 (2/2) BOARD** **AE-12 (2/2) BOARD** CARD RACK DUS-481

AE-12 BOARD (2/2)

Longitudinal Processor

DVR-2000	DVR-2100
J : S/N 10101 and higher	J : S/N 10401 and higher
UC : S/N 10101 and higher	UC : S/N 10401 and higher
EK : S/N 10101 and higher	EK : S/N 10401 and higher

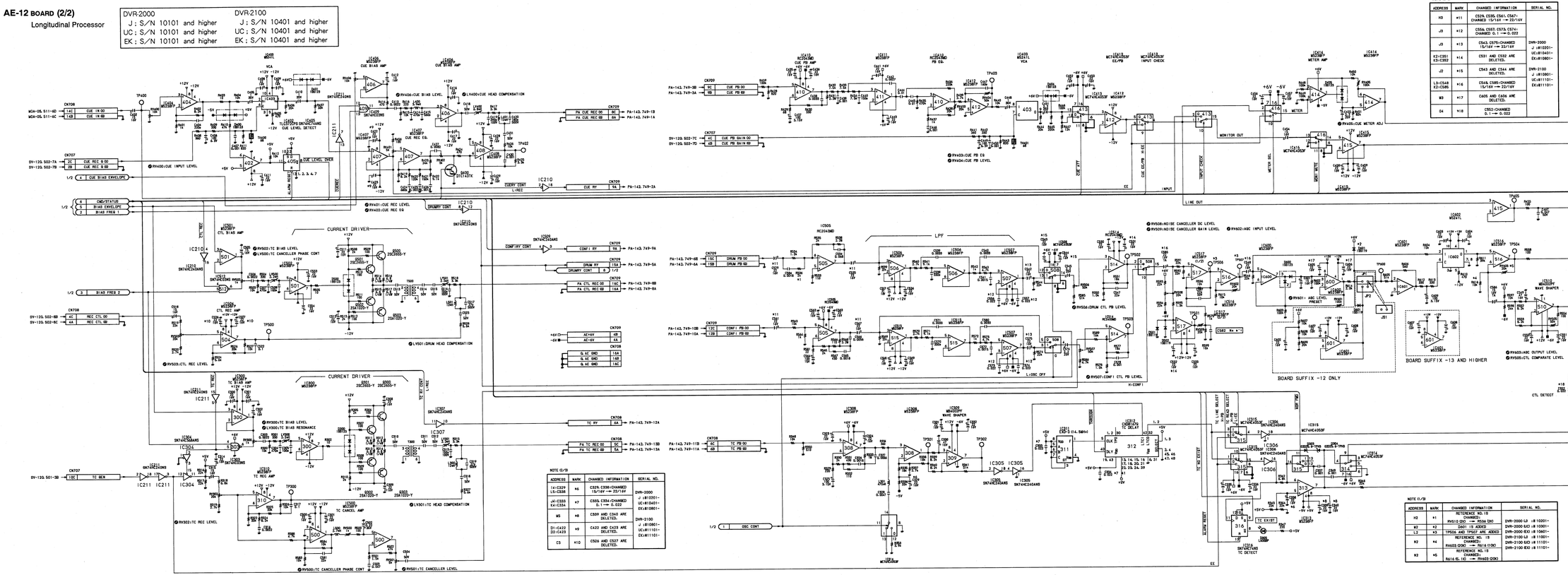

NOTE G/3B			
ADDRESS	MARK	CHANGED INFORMATION	SERIAL NO.
H2	#11	C529, C535, C561, C567: CHANGED 15/16V → 22/16V	DVR-2000 J :810301- UC:810401- EK:810801- DVR-2100 J :810801- UC:811101- EK:811101-
J9	#12	C558, C557, C573, C574: CHANGED 0.1 → 0.022	
J9	#13	C543, C575: CHANGED 15/16V → 22/16V	
K2:C351 K3:C352	#14	C531 AND C532 ARE DELETED.	
J2	#15	C543 AND C544 ARE DELETED.	
L3:C548 K2:C585	#16	C548, C585: CHANGED 15/16V → 22/16V	
W3	#17	C405 AND C406 ARE DELETED.	
D4	#18	C553: CHANGED 0.1 → 0.022	

NOTE G/3B			
ADDRESS	MARK	CHANGED INFORMATION	SERIAL NO.
I4:C329 L5:C338	#6	C329, C338: CHANGED 15/16V → 22/16V	DVR-2000 J :810301- UC:810401- EK:810801- DVR-2100 J :810801- UC:811101- EK:811101-
J4:C333 K4:C334	#7	C333, C334: CHANGED 0.1 → 0.022	
W5	#8	C339 AND C340 ARE DELETED.	
D1:C422 D2:C423	#9	C422 AND C423 ARE DELETED.	
C3	#10	C526 AND C527 ARE DELETED.	

NOTE G/3B			
ADDRESS	MARK	CHANGED INFORMATION	SERIAL NO.
H2	#1	REFERENCE NO.18 CHANGED: RV510 (20K) → RS34 (20K)	DVR-2000 UJ :810201- DVR-2000 EJ :810301- DVR-2100 UJ :810601- DVR-2100 EJ :810701- DVR-2100 UK :811001- DVR-2100 EK :811101-
H2	#2	D601 IS ADDED	
L2	#3	TP526 AND TP527 ARE ADDED	
H2	#4	REFERENCE NO. 18 CHANGED: RV503 (20K) → RS16 (10K)	
H2	#5	REFERENCE NO.19 CHANGED: RS16 (5.1K) → RV503 (20K)	

AE-12 BOARD **(2/2)**
BOARD NO. 1-639-123-12. -13

DVR-2000 UJ :810101-
DVR-2000 UJC :810101-
DVR-2000 EJC :810101-
DVR-2100 UJ :810401-
DVR-2100 UJC :810401-
DVR-2100 EJC :810401-

19-93 (b)

19-93 (b)

AE-12 BOARD (2/2)

Longitudinal Processor

DVR-2000	DVR-2100
J : S/N 10001 through 10099	J : S/N 10001 through 10399
UC : S/N 10001 through 10099	UC : S/N 10001 through 10399
EK : S/N 10001 through 10099	EK : S/N 10001 through 10399

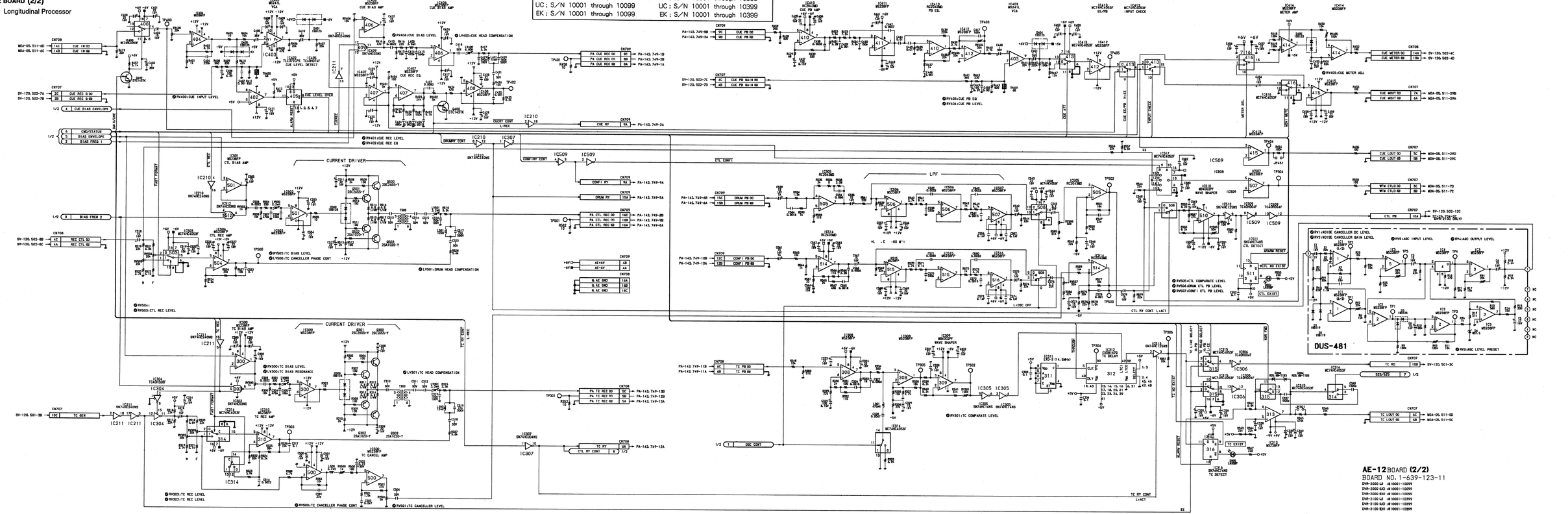

AE-12 BOARD (2/2)
BOARD NO. 1-639-123-11
DVR-2000 UJ : #10001-10099
DVR-2000 EKJ : #10001-10099
DVR-2000 EK3 : #10001-10099
DVR-2100 UJ : #10001-10399
DVR-2100 EKJ : #10001-10399
DVR-2100 EK3 : #10001-10399

19-93 (a)

MOA-05 (1/5) BOARD CARD RACK
CARD RACK MOA-05 (1/5) BOARD

MOA-05 BOARD (1/5)
Audio/Monitor Amp

DVR-2000	DVR-2100
J ; S/N 10201 and higher	J ; S/N 10801 and higher
UC ; S/N 10301 and higher	UC ; S/N 11101 and higher
EK ; S/N 10601 and higher	EK ; S/N 11101 and higher

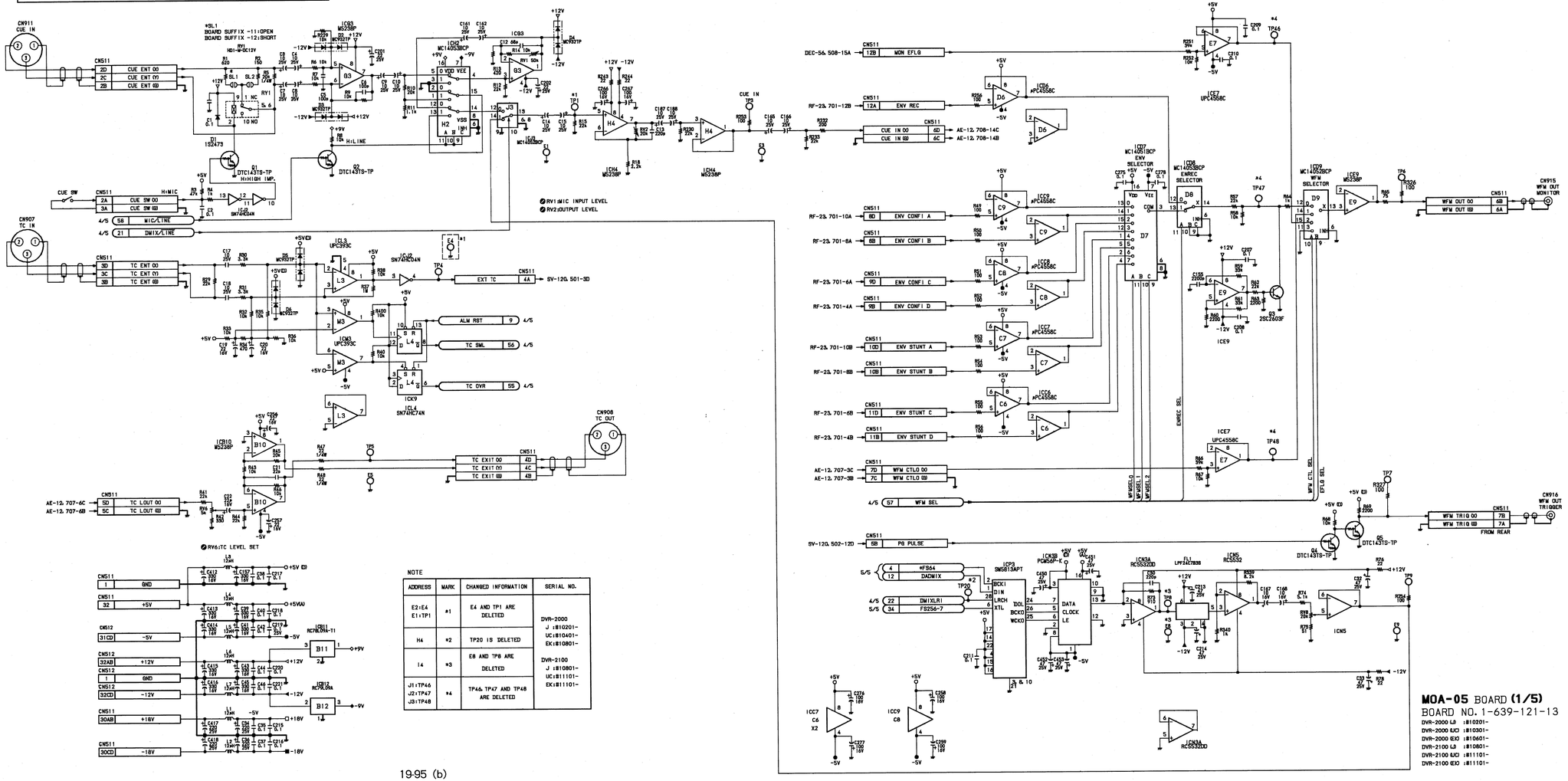

NOTE

ADDRESS	MARK	CHANGED INFORMATION	SERIAL NO.
E2:E4 E1:TP1	#1	E4 AND TP1 ARE DELETED	DVR-2000 J :#10201- UC:#10401- EK:#10601- DVR-2100 J :#10801- UC:#11101- EK:#11101-
H4	#2	TP20 IS DELETED	
I4	#3	E8 AND TP8 ARE DELETED	
J1:TP46 J2:TP47 J3:TP48	#4	TP46, TP47 AND TP48 ARE DELETED	

MOA-05 BOARD (1/5)
BOARD NO. 1-639-121-13
DVR-2000 (J) :#10201-
DVR-2000 (UC) :#10301-
DVR-2000 (EK) :#10601-
DVR-2100 (J) :#10801-
DVR-2100 (UC) :#11101-
DVR-2100 (EK) :#11101-

19-95 (b)

CARD RACK **MOA-05 (1/5) BOARD**

MOA-05 BOARD (1/5)

Audio/Monitor Amp

DVR-2000	DVR-2100
J ; S/N 10001 through 10199	J ; S/N 10001 through 10799
UC ; S/N 10001 through 10299	UC ; S/N 10001 through 11099
EK ; S/N 10001 through 10599	EK ; S/N 10001 through 11099

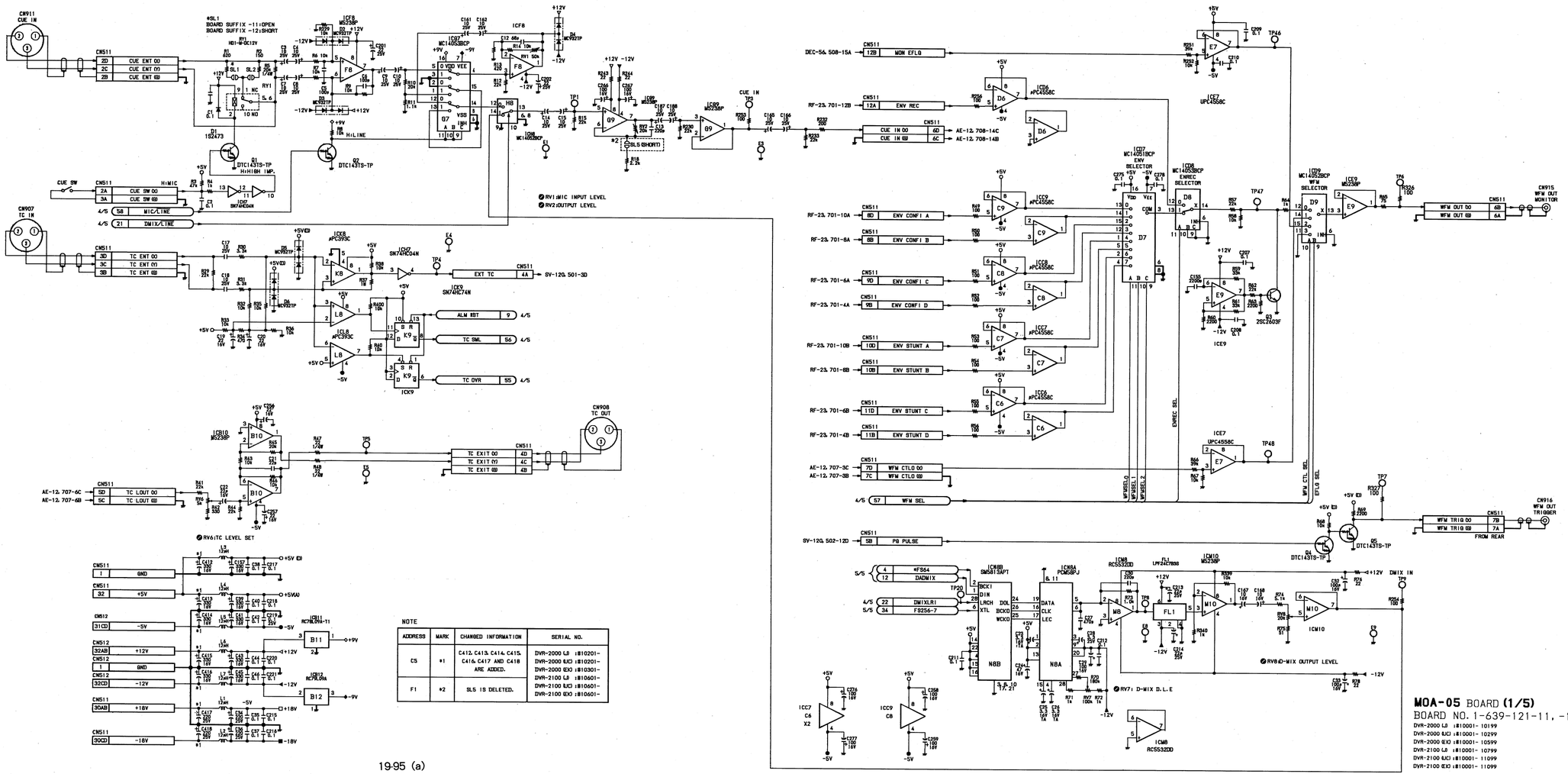

NOTE

ADDRESS	MARK	CHANGED INFORMATION	SERIAL NO.
C5	*1	C412, C413, C414, C415, C416, C417 AND C418 ARE ADDED.	DVR-2000 LJ :B10201- DVR-2000 UJC1 :B10201- DVR-2000 EK1 :B10301- DVR-2100 LJ :B10601- DVR-2100 UJC1 :B10601- DVR-2100 EK1 :B10601-
F1	*2	SL5 IS DELETED.	

MOA-05 BOARD **(1/5)**

BOARD NO. 1-639-121-11, -12

DVR-2000 LJ :B10001- 10199
DVR-2000 UJC1 :B10001- 10299
DVR-2000 EK1 :B10001- 10599
DVR-2100 LJ :B10001- 10799
DVR-2100 UJC1 :B10001- 11099
DVR-2100 EK1 :B10001- 11099

19-95 (a)

MOA-05 (2/5) BOARD CARD RACK
CARD RACK MOA-05 (2/5) BOARD

MOA-05 BOARD (2/5)
Audio/Monitor Amp

DVR-2000	DVR-2100
J ; S/N 10201 and higher	J ; S/N 10601 and higher
UC ; S/N 10201 and higher	UC ; S/N 10601 and higher
EK ; S/N 10301 and higher	EK ; S/N 10601 and higher

NOTE

ADDRESS	MARK	CHANGED INFORMATION	SERIAL NO.
D1	*1	C410, C411 AND FL8 ARE ADDED.	DVR-2000 J :#10201- UC:#10201- EK:#10301- DVR-2100 J :#10601- UC:#10601- EK:#10601-
D4	*2	REFERENCE NO. IS CHANGED. ICD2 → ICD4	DVR-2000 J :#10201- UC:#10301- EK:#10601- DVR-2100 J :#10801- UC:#11101- EK:#11101-
E4	*3	REFERENCE NO. IS CHANGED. ICE3 → ICD2	
B4	*4	REFERENCE NO. IS CHANGED. ICB2 → ICE3	
B3	*5	REFERENCE NO. IS CHANGED. ICB14 → ICH13	
H3	*6	REFERENCE NO. IS CHANGED. ICH13 → ICH12	
H4	*7	REFERENCE NO. IS CHANGED. ICB13 → ICB12	
J5	*8	C369 AND C372 ARE DELETED	DVR-2000 J :#10201- UC:#10401- EK:#10701- DVR-2100 J :#10801- UC:#11101- EK:#11101-
B4	*9	E8 AND TP11 ARE DELETED	DVR-2000 J :#10201- UC:#10401- EK:#10801- DVR-2100 J :#10801- UC:#11101- EK:#11101-
J3:TP21 J3:TP22 J4:TP23	*10	TP21, TP22 AND TP23 ARE DELETED	
F4	*11	TP50 IS DELETED	

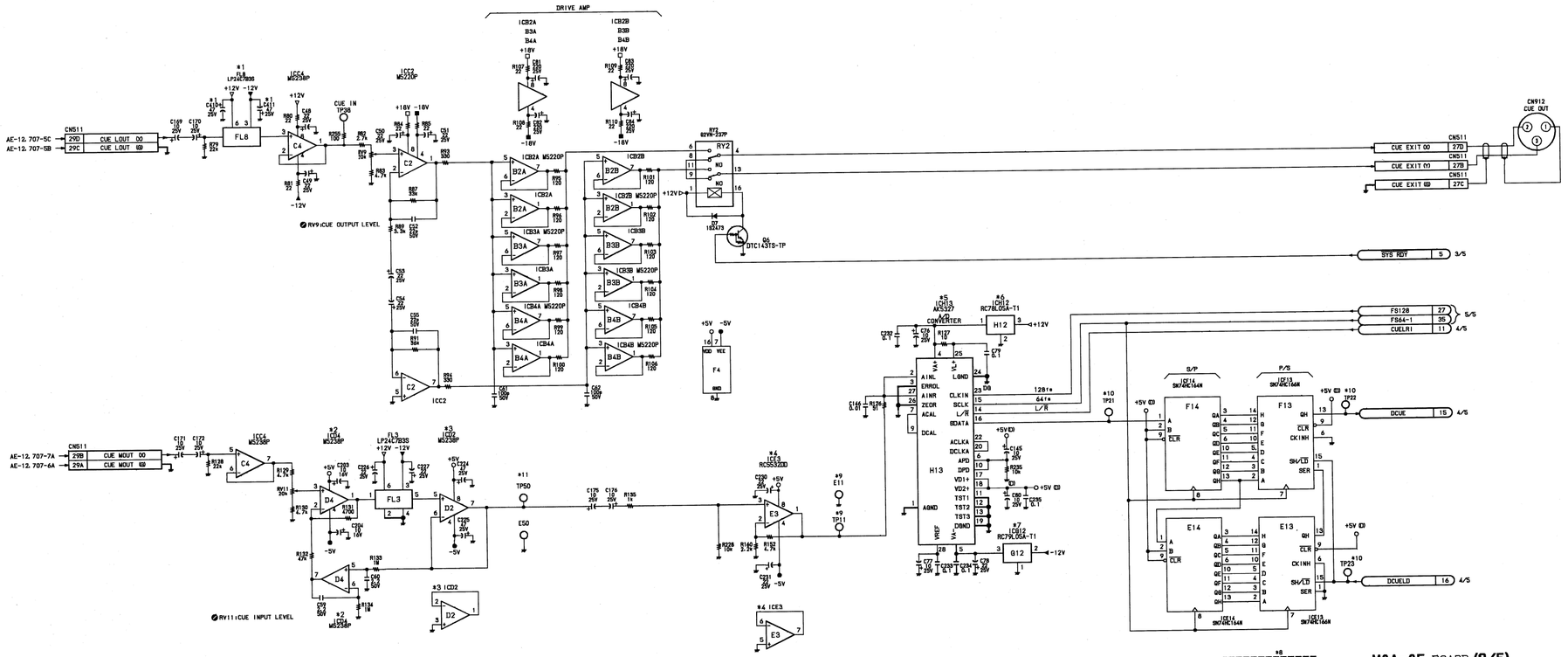

MOA-05 BOARD **(2/5)**
BOARD NO. 1-639-121-12, -13
DVR-2000 (J) :#10201-
DVR-2000 (UC) :#10201-
DVR-2000 (EK) :#10301-
DVR-2100 (J) :#10601-
DVR-2100 (UC) :#10601-
DVR-2100 (EK) :#10601-

19-97 (b)

CARD RACK **MOA-05 (2/5) BOARD**

MOA-05 BOARD (2/5)
Audio/Monitor Amp

DVR-2000	DVR-2100
J ; S/N 10001 through 10199	J ; S/N 10001 through 10599
UC ; S/N 10001 through 10199	UC ; S/N 10001 through 10599
EK ; S/N 10001 through 10299	EK ; S/N 10001 through 10599

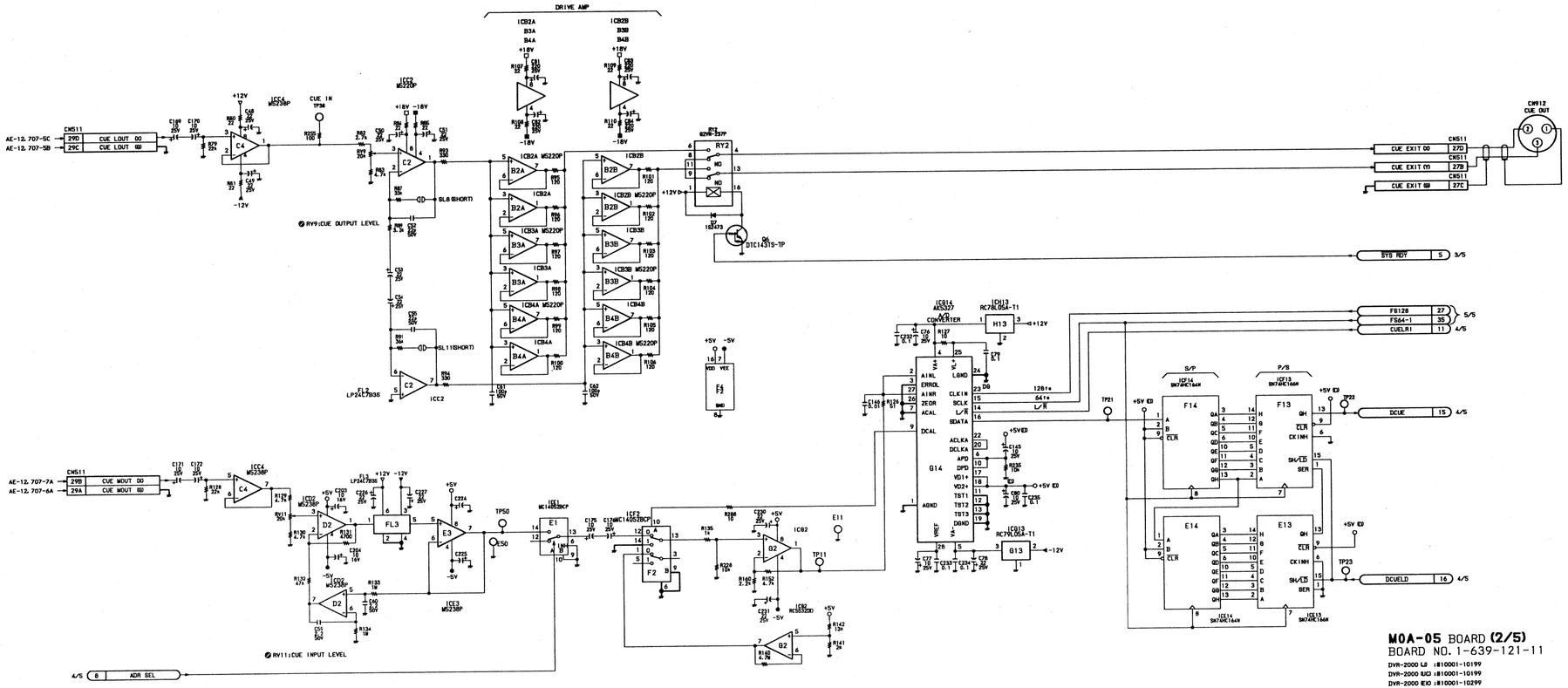

19-97 (a)

MOA-05 (3/5) BOARD CARD RACK
CARD RACK MOA-05 (3/5) BOARD

MOA-05 BOARD (3/5)
Audio/Monitor Amp

DVR-2000	DVR-2100
J ; S/N 10201 and higher	J ; S/N 10801 and higher
UC ; S/N 10301 and higher	UC ; S/N 11101 and higher
EK ; S/N 10601 and higher	EK ; S/N 11101 and higher

NOTE

ADDRESS	MARK	CHANGED INFORMATION	SERIAL No.
H4	*1	C486 IS ADDED	DVR-2000 J :#10201- UC:#10401- EK:#10701- DVR-2100 J :#10801- UC:#11101- EK:#11101-
D1:TP35 D2:TP36	*2	TP35 AND TP36 ARE DELETED	DVR-2000 J :#10201- UC:#10401- EK:#10601- DVR-2100 J :#10801- UC:#11101- EK:#11101-
F1	*3	E12, TP12 AND TP14 ARE DELETED	
F3:TP16 F4:TP18	*4	TP16 AND TP18 ARE DELETED	
J2	*5	E15 IS DELETED	
J2	*6	ES1, ES2, TPS1 AND TPS2 ARE DELETED	
J3	*7	ES3, ES4, TPS3 AND TPS4 ARE DELETED	
Q1:R341 Q2:R343	*8	R341, R343 CHANGED 8.2k → 10k	DVR-2000 J :#10201- UC:#10501- EK:#10901- DVR-2100 J :#10801- UC:#11101- EK:#11101-

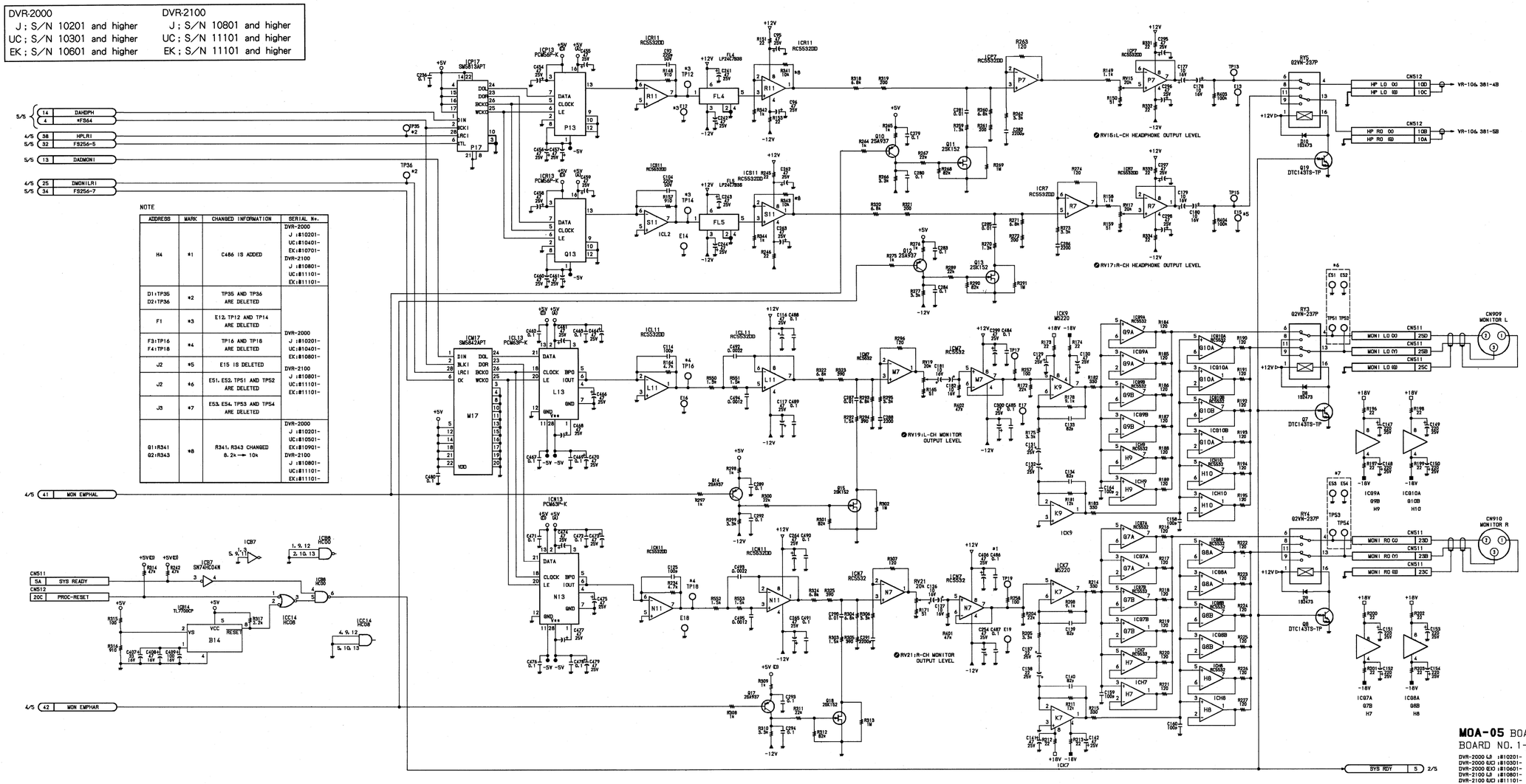

MOA-05 BOARD (3/5)
BOARD NO. 1-639-121-13

DVR-2000 LJ :#10201-
DVR-2000 EJ :#10301-
DVR-2000 EJ :#10601-
DVR-2100 LJ :#10801-
DVR-2100 EJ :#11101-
DVR-2100 EJ :#11101-

19-99 (b)

MOA-05 (3/5) BOARD CARD RACK
CARD RACK **MOA-05 (3/5) BOARD**

MOA-05 BOARD (3/5)

Audio/Monitor Amp

DVR-2000	DVR-2100
J ; S/N 10001 through 10199	J ; S/N 10001 through 10799
UC ; S/N 10001 through 10299	UC ; S/N 10001 through 11099
EK ; S/N 10001 through 10599	EK ; S/N 10001 through 11099

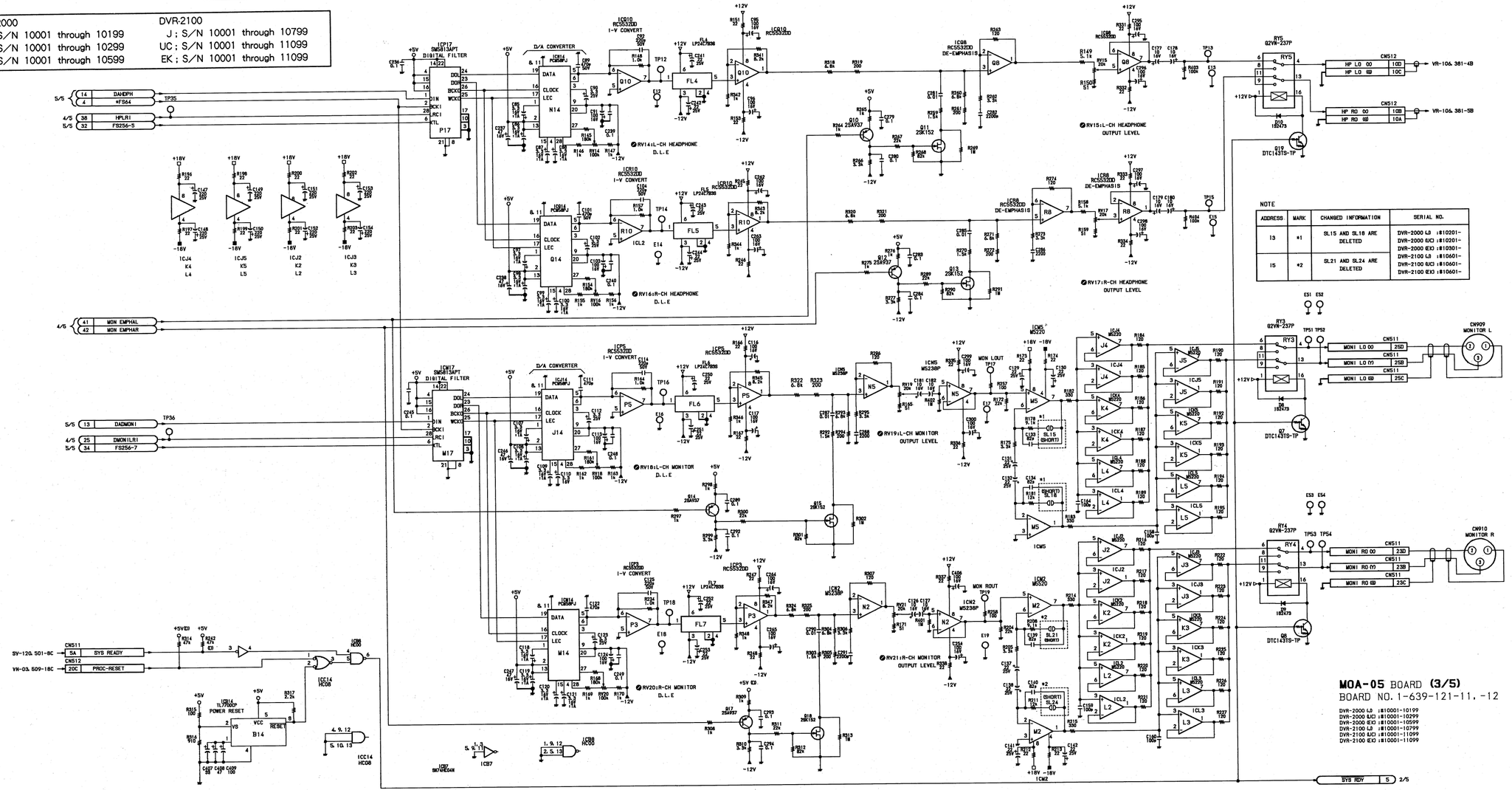

NOTE			
ADDRESS	MARK	CHANGED INFORMATION	SERIAL NO.
I3	*1	SL15 AND SL18 ARE DELETED	DVR-2000 LJ :#10201- DVR-2000 UC :#10201- DVR-2000 EK :#10301- DVR-2100 LJ :#10501- DVR-2100 UC :#10601- DVR-2100 EK :#10601-
I5	*2	SL21 AND SL24 ARE DELETED	

MOA-05 BOARD **(3/5)**

BOARD NO. 1-639-121-11, -12

DVR-2000 LJ :#10001-10199
DVR-2000 UC :#10001-10299
DVR-2000 EK :#10001-10599
DVR-2100 LJ :#10001-10799
DVR-2100 UC :#10001-11099
DVR-2100 EK :#10001-11099

19-99 (a)

CARD RACK MOA-05 (4/5) BOARD MOA-05 (4/5) BOARD CARD RACK

MOA-05 BOARD (4/5)

Audio/Monitor Amp

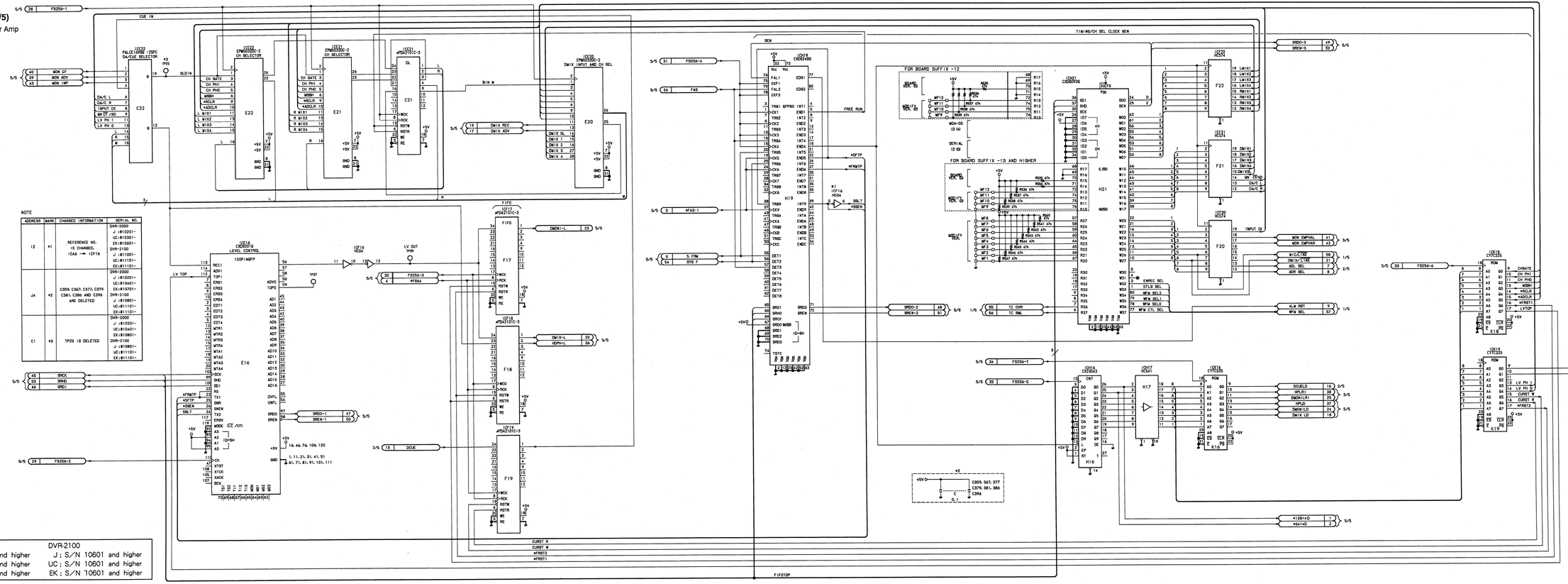

NOTE			
ADDRESS	MARK	CHANGED INFORMATION	SERIAL NO.
I2	*1	REFERENCE NO. IS CHANGED. IC46 → IC F16	DVR-2000 J :810201- UC:810301- EK:810601- DVR-2100 J :811001- UC:811101- EK:811101-
J4	*2	C359, C367, C377, C379 C381, C386 AND C396 ARE DELETED	DVR-2000 J :810201- UC:810401- EK:810701- DVR-2100 J :810801- UC:811101- EK:811101-
C1	*3	TP25 IS DELETED	DVR-2000 J :810201- UC:810401- EK:810601- DVR-2100 J :810601- UC:811101- EK:811101-

DVR-2000	DVR-2100
J ; S/N 10201 and higher	J ; S/N 10601 and higher
UC ; S/N 10201 and higher	UC ; S/N 10601 and higher
EK ; S/N 10301 and higher	EK ; S/N 10601 and higher

MOA-05 BOARD **(4/5)**

BOARD NO. 1-639-121-12, -13

DVR-2000 J/J :810201-
DVR-2000 UC/J :810201-
DVR-2000 EK/J :810301-
DVR-2100 J/J :810601-
DVR-2100 UC/J :810601-
DVR-2100 EK/J :810601-

19-101 (b)

CARD RACK MOA-05 (4/5) BOARD MOA-05 (4/5) BOARD CARD RACK

MOA-05 BOARD (4/5)

Audio/Monitor Amp

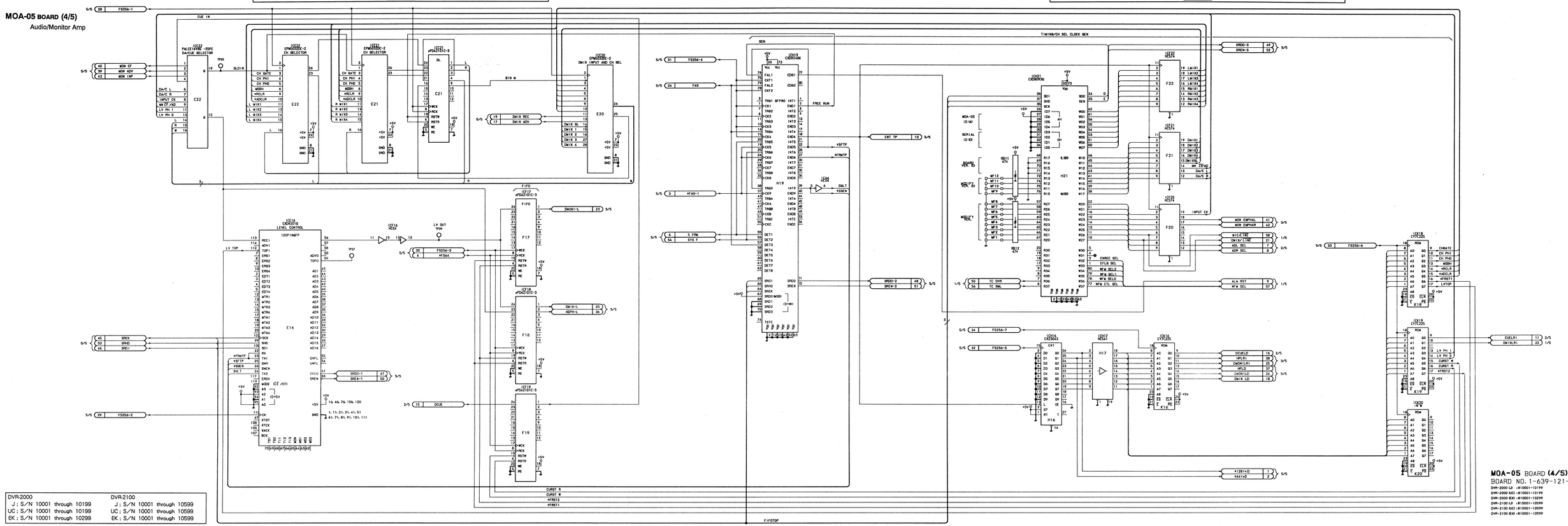

DVR-2000	DVR-2100
J : S/N 10001 through 10199	J : S/N 10001 through 10599
UC : S/N 10001 through 10199	UC : S/N 10001 through 10599
EK : S/N 10001 through 10299	EK : S/N 10001 through 10599

MOA-05 BOARD (4/5)

BOARD NO. 1-639-121-11

DVR-2000 UJ :#10001-10199
DVR-2000 UC1 :#10001-10199
DVR-2000 EK1 :#10001-10299
DVR-2100 UJ :#10001-10599
DVR-2100 UC1 :#10001-10599
DVR-2100 EK1 :#10001-10599

19-101 (a)

MOA-05 BOARD (5/5)

Audio/Monitor Amp

DVR-2000	DVR-2100
J ; S/N 10201 and higher	J ; S/N 10601 and higher
UC ; S/N 10201 and higher	UC ; S/N 10601 and higher
EK ; S/N 10301 and higher	EK ; S/N 10601 and higher

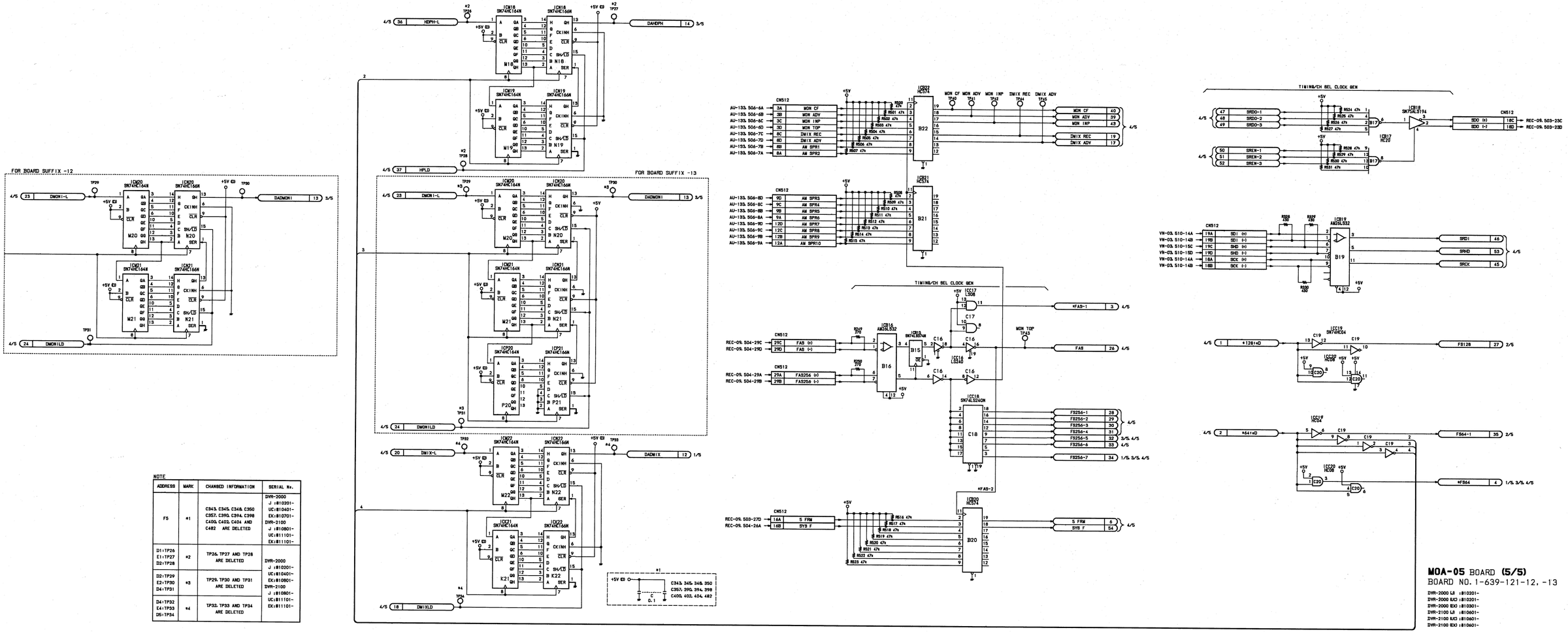

NOTE			
ADDRESS	MARK	CHANGED INFORMATION	SERIAL No.
F5	*1	C343, C345, C348, C350 C357, C390, C394, C398 C405, C402, C404 AND C482 ARE DELETED	DVR-2000 J :810201- UC:810401- EK:810701- DVR-2100 J :810801- UC:811101- EK:811101-
D1↔TP26 E1↔TP27 D2↔TP28	*2	TP26, TP27 AND TP28 ARE DELETED	DVR-2000 J :810201- UC:810401- EK:810601- DVR-2100 J :810801- UC:811101- EK:811101-
D2↔TP29 E2↔TP30 D4↔TP31	*3	TP29, TP30 AND TP31 ARE DELETED	
D4↔TP32 E4↔TP33 D5↔TP34	*4	TP32, TP33 AND TP34 ARE DELETED	

MOA-05 BOARD **(5/5)**
BOARD NO. 1-639-121-12, -13

DVR-2000 LB :810201-
DVR-2000 UC :810201-
DVR-2000 EK :810301-
DVR-2100 LB :810601-
DVR-2100 UC :810601-
DVR-2100 EK :810601-

19-103 (b)

MOA-05 (5/5) BOARD CARD RACK
CARD RACK **MOA-05 (5/5) BOARD**

MOA-05 BOARD (5/5)
Audio/Monitor Amp

DVR-2000	DVR-2100
J : S/N 10001 through 10199	J : S/N 10001 through 10599
UC : S/N 10001 through 10199	UC : S/N 10001 through 10599
EK : S/N 10001 through 10299	EK : S/N 10001 through 10599

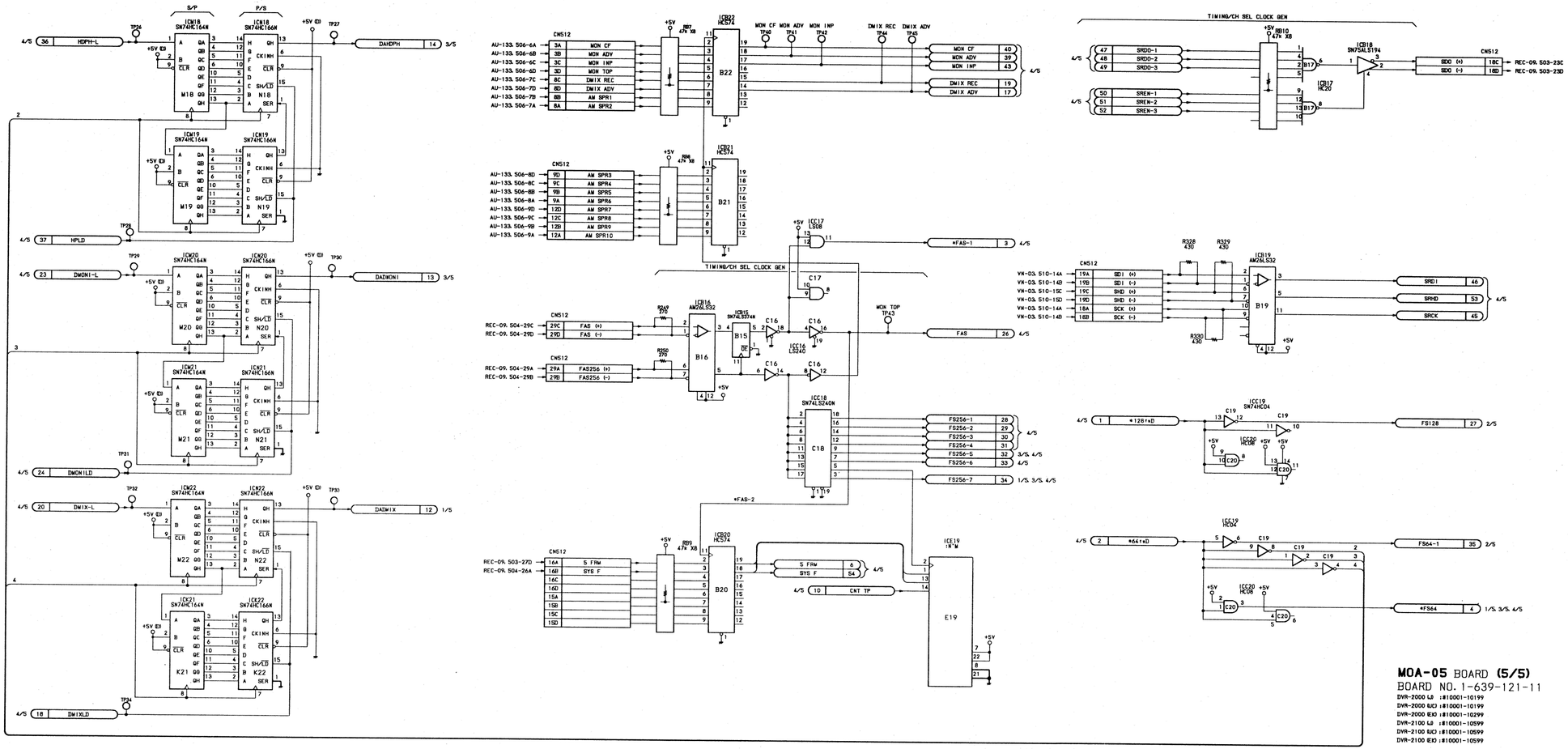

MOA-05 BOARD **(5/5)**
BOARD NO. 1-639-121-11
DVR-2000 (J) :#10001-10199
DVR-2000 (UC) :#10001-10199
DVR-2000 (EK) :#10001-10299
DVR-2100 (J) :#10001-10599
DVR-2100 (UC) :#10001-10599
DVR-2100 (EK) :#10001-10599

19-103 (a)

MOA-05 (5/5) BOARD CARD RACK

CARD RACK **MOA-05 (5/5) BOARD**

MOA-05 BOARD (5/5)
Audio/Monitor Amp

DVR-2000	DVR-2100
J ; S/N 10001 through 10199	J ; S/N 10001 through 10599
UC ; S/N 10001 through 10199	UC ; S/N 10001 through 10599
EK ; S/N 10001 through 10299	EK ; S/N 10001 through 10599

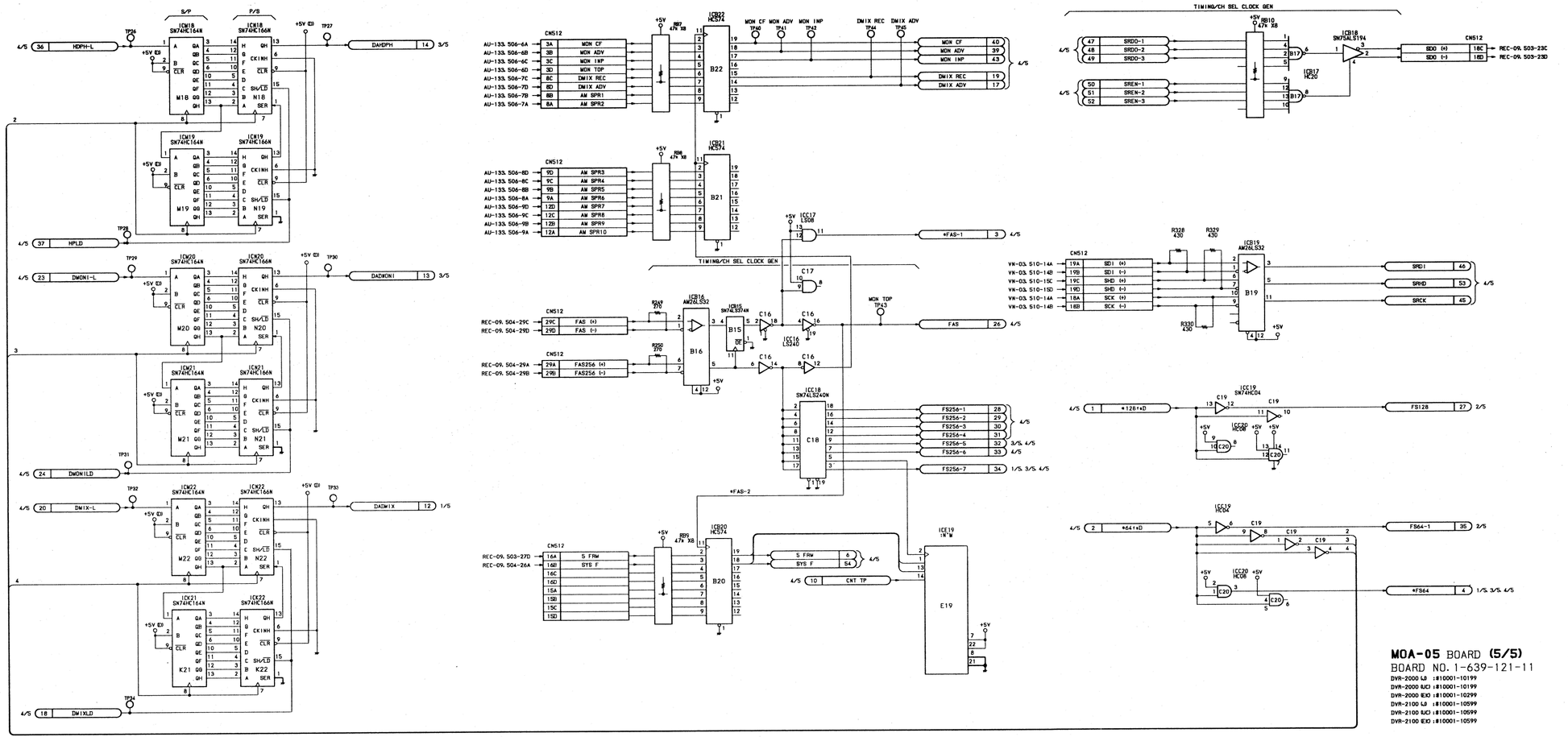

MOA-05 BOARD **(5/5)**
BOARD NO. 1-639-121-11
DVR-2000 UJ :#10001-10199
DVR-2000 UC) :#10001-10199
DVR-2000 (EK) :#10001-10299
DVR-2100 UJ :#10001-10599
DVR-2100 UC) :#10001-10599
DVR-2100 (EK) :#10001-10599

19-103 (a)

PA-142 BOARD

CUE/TC/CTL Head Amp

MARK	CHANGED INFORMATION	SERIAL NO.
*1	C1, C7, C9: 15 16V → 22 4V	DVR-2000 (J) :#10001- DVR-2000 (UC) :#10001- DVR-2000 (EK) :#10001- DVR-2100 (J) :#10201- DVR-2100 (UC) :#10201- DVR-2100 (EK) :#10201-
*2	C18 (100u 6.3V) IS REPLACED TO C4 (22 4V)	
*3	C16, D4, Q4 AND RY4 ARE DELETED	

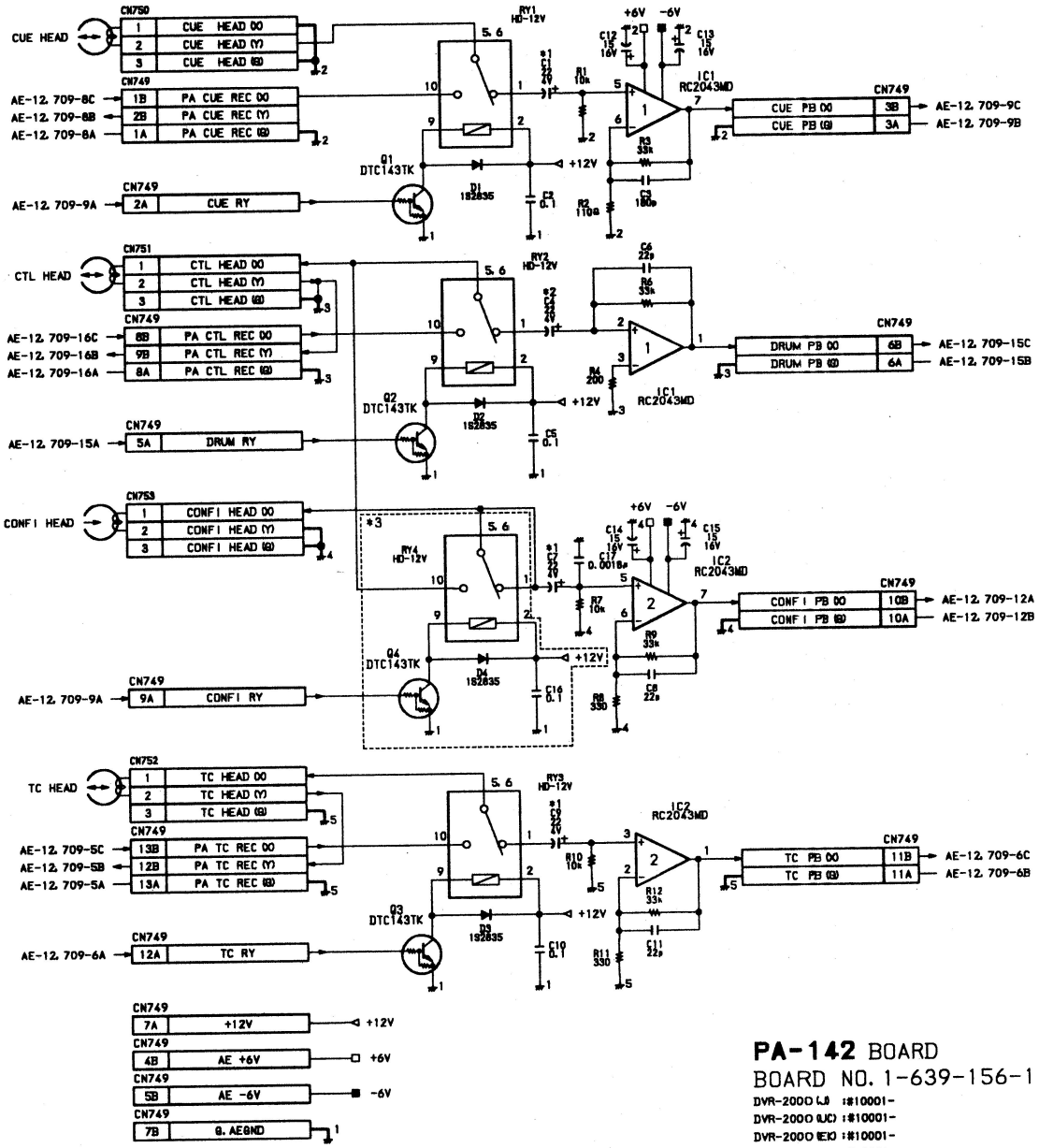

PA-142 BOARD

BOARD NO. 1-639-156-11, -12

DVR-2000 (J) :#10001-
DVR-2000 (UC) :#10001-
DVR-2000 (EK) :#10001-
DVR-2100 (J) :#10001-
DVR-2100 (UC) :#10001-
DVR-2100 (EK) :#10001-

CARD RACK SV-120 (1/6) BOARD SV-120 (1/6) BOARD CARD RACK

SV-120 BOARD (1/6)

Servo/System Control

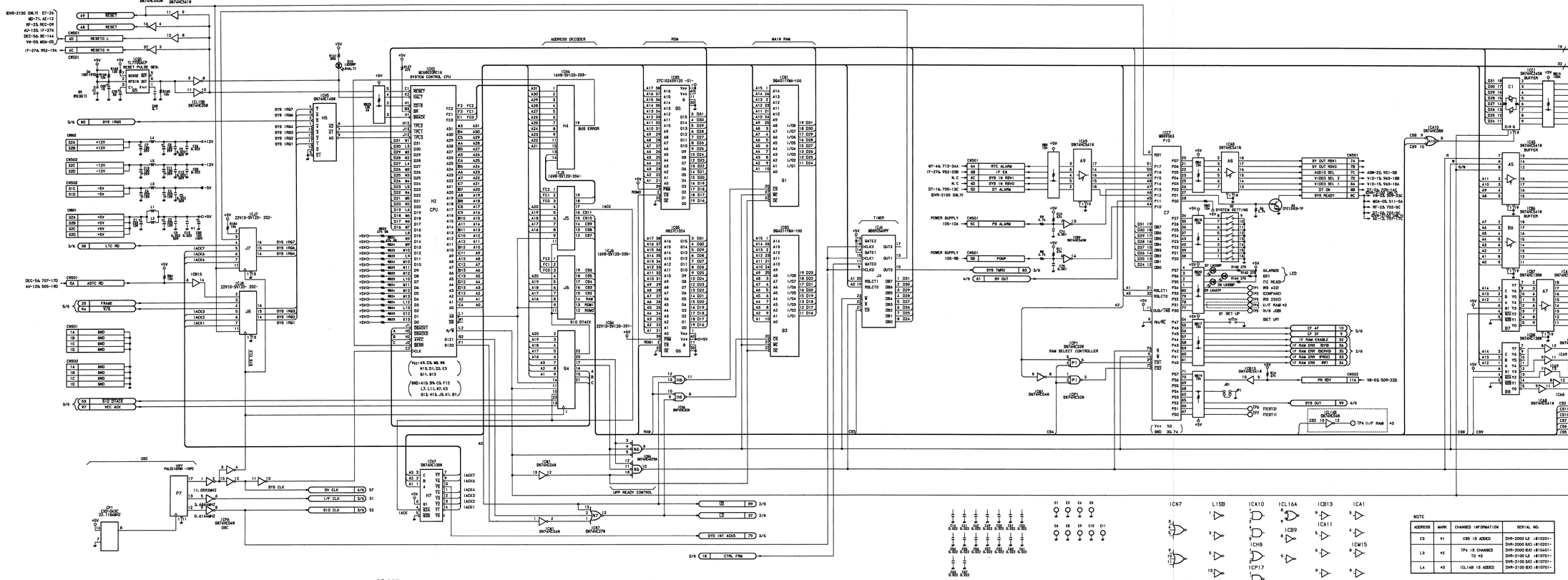

NOTE			
ADDRESS	MARK	CHANGED INFORMATION	SERIAL NO.
C3	*1	C85 IS ADDED	DVR-2000 LJ :#10001-
			DVR-2000 KJ :#10001-
L3	*2	TP4 IS CHANGED TO *3	DVR-2000 EX0 :#10001-
			DVR-2100 LJ :#10001-
L4	*3	IC14&15 IS ADDED	DVR-2100 KJ :#10001-
			DVR-2100 EX0 :#10001-

SV-120 BOARD **(1/6)**

BOARD NO. 1-639-116-11, -12

19-107

CARD RACK SV-120 (2/6) BOARD SV-120 (2/6) BOARD CARD RACK

SV-120 BOARD (2/6)
Servo/System Control

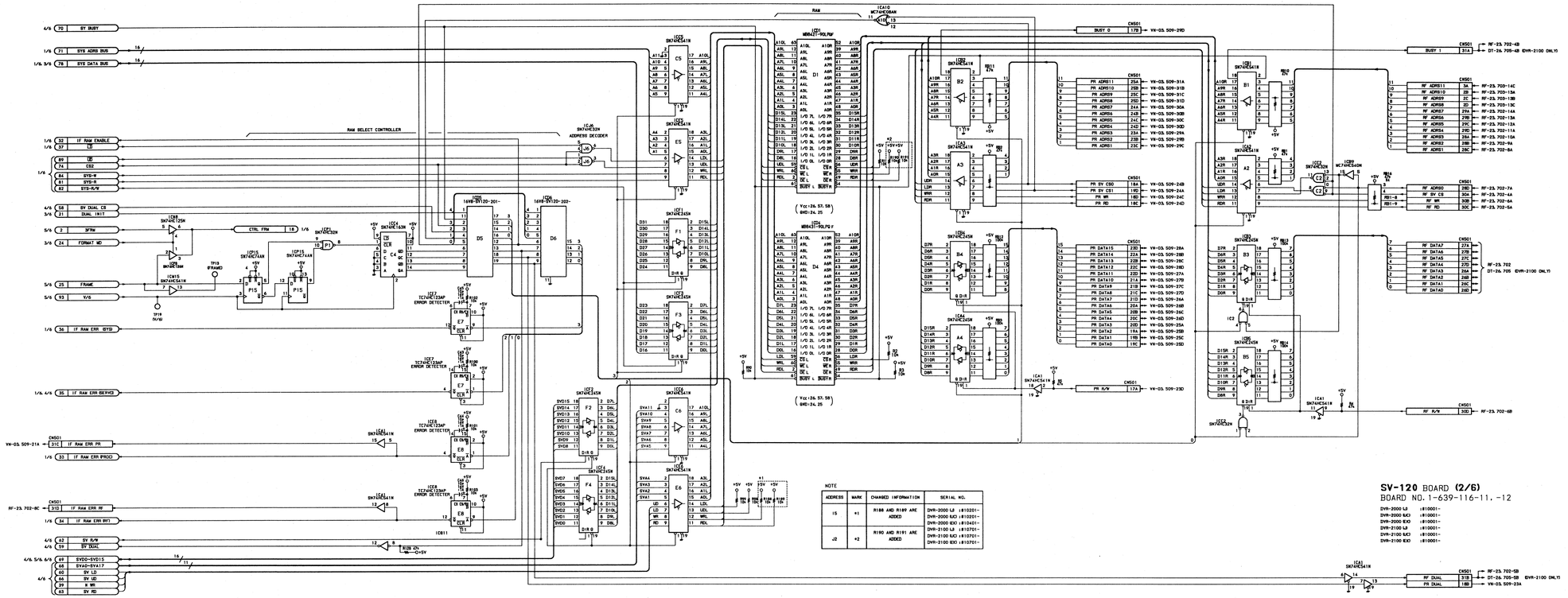

NOTE

ADDRESS	MARK	CHANGED INFORMATION	SERIAL NO.
J5	*1	R188 AND R189 ARE ADDED	DVR-2000 LJ :810201- DVR-2000 MJ :810201- DVR-2000 EJ :810401- DVR-2100 LJ :810701- DVR-2100 MJ :810701- DVR-2100 EJ :810701-
J2	*2	R190 AND R191 ARE ADDED	

19-109

CARD RACK SV-120 (3/6) BOARD SV-120 (3/6) BOARD CARD RACK

SV-120 BOARD (3/6)
Servo/System Control

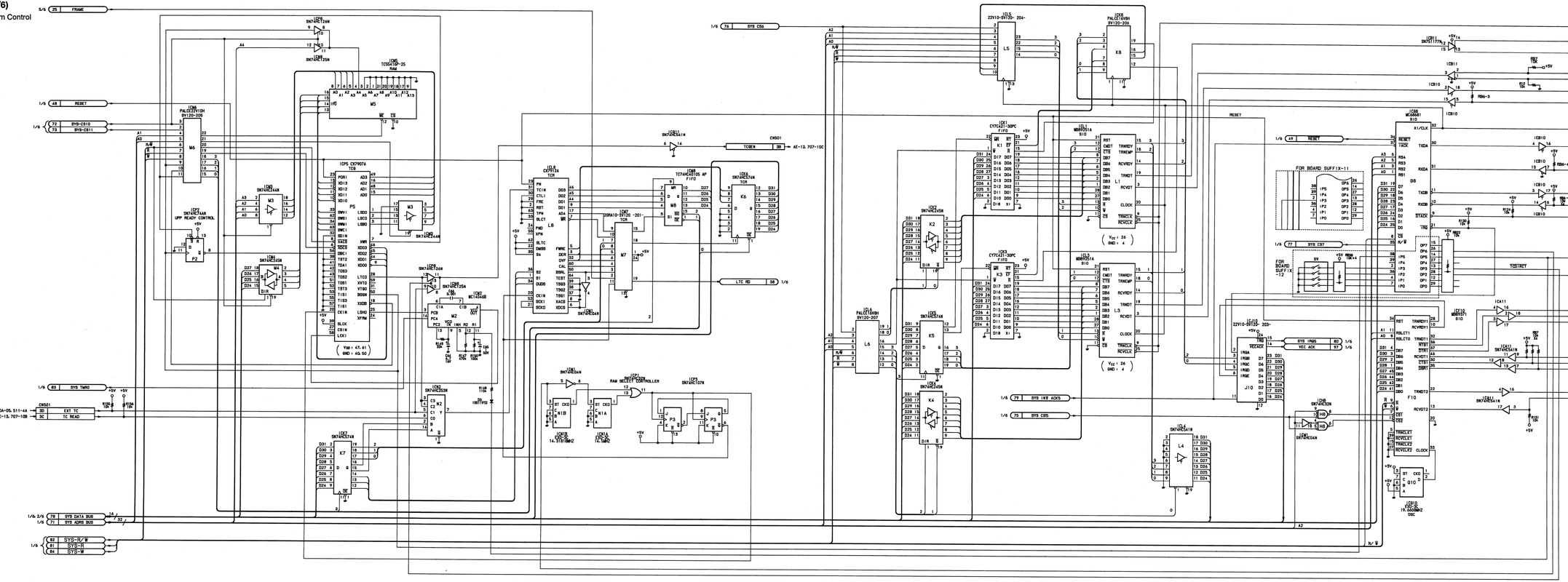

SV-120 BOARD (3/6)
BOARD NO. 1-639-116-11, -12

DVR-2000 LE	#10001-
DVR-2000 EJC	#10001-
DVR-2000 EJO	#10001-
DVR-2100 LE	#10001-
DVR-2100 EJC	#10001-
DVR-2100 EJO	#10001-

19-111

CARD RACK SV-120 (4/6) BOARD SV-120 (4/6) BOARD CARD RACK

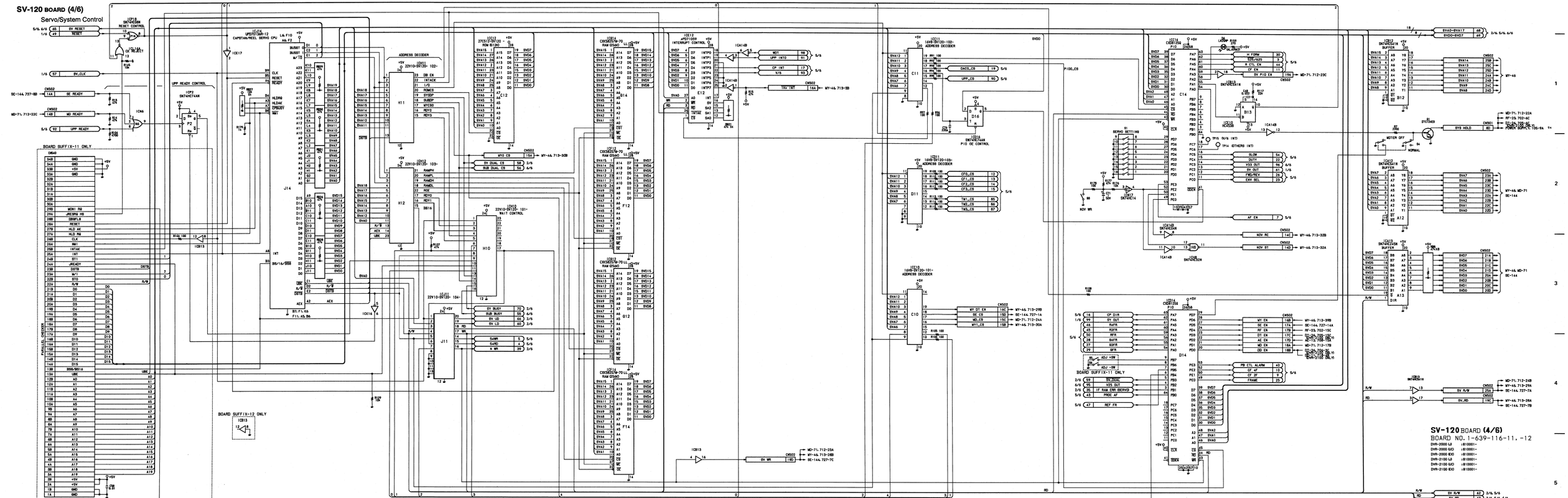

19-113

CARD RACK SV-120 (5/6) BOARD SV-120 (5/6) BOARD CARD RACK

SV-120 BOARD (5/6)

Servo/System Control

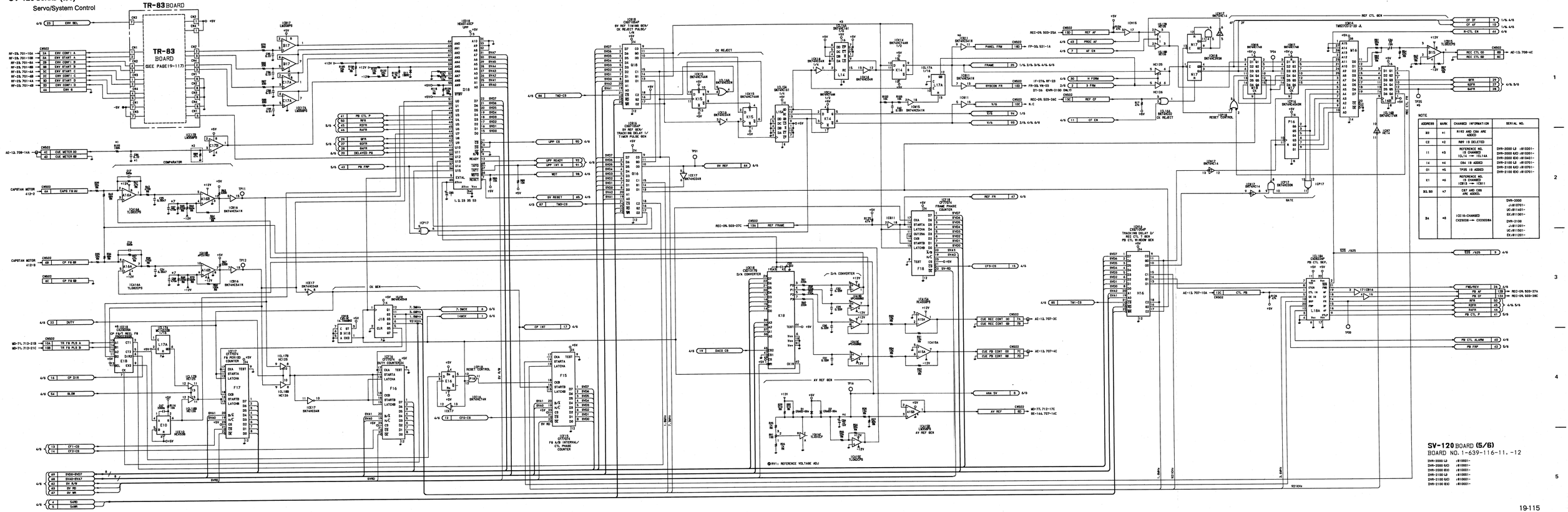

ADDRESS	MARK	CHANGED INFORMATION	SERIAL NO.
B2	#1	R192 AND C84 ARE ADDED	
C2	#2	R89 IS DELETED	
I1	#3	REFERENCE NO. IC116 CHANGED IC114 ⟶ IC114A	DVR-2000 LB : (810001~ DVR-2000 EKD : (810001~ DVR-2000 EKS : (810401~ DVR-2100 LB : (810701~ DVR-2100 EKD : (810701~ DVR-2100 EKS : (810701~
I4	#4	C84 IS ADDED	
O1	#5	TP95 IS ADDED	
E1	#6	REFERENCE NO. IS CHANGED IC813 ⟶ IC811	
B3, B9	#7	C87 AND C88 ARE ADDED.	
B4	#8	IC218:CHANGED CX29038 ⟶ CX29038A	DVR-3000 J:(810701~ UC:(811401~ EX:(811301~ DVR-2100 J:(811201~ UC:(811501~ EX:(811201~

SV-120 BOARD (5/6)

BOARD NO. 1-639-116-11, -12

DVR-2000 LB	(810001~
DVR-2000 EKD	(810001~
DVR-2000 EKS	(810001~
DVR-2100 LB	(810001~
DVR-2100 EKD	(810001~
DVR-2100 EKS	(810001~

19-115

SV-120 BOARD (6/6)

Servo/System Control

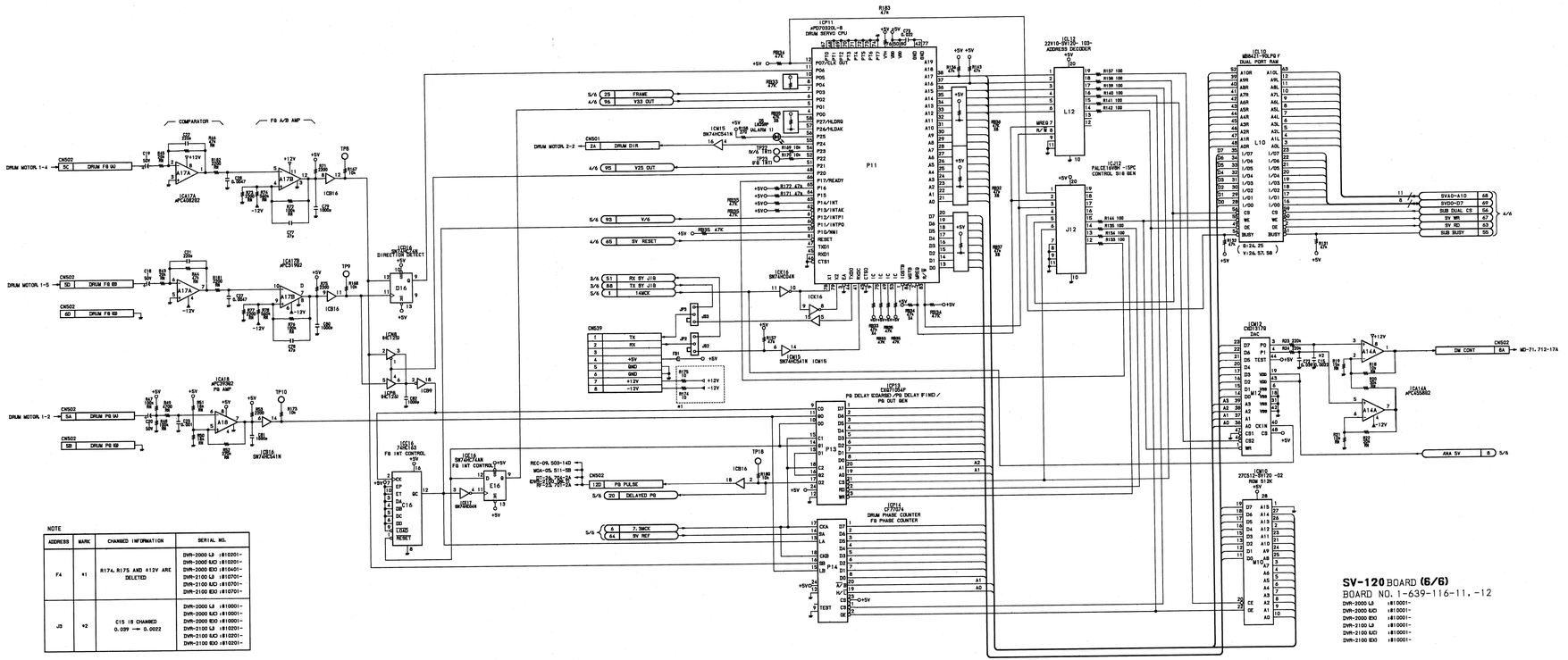

NOTE			
ADDRESS	MARK	CHANGED INFORMATION	SERIAL NO.
F4	#1	R174, R175 AND +12V ARE DELETED	DVR-2000 LJ :810201~ DVR-2000 UJ :810201~ DVR-2000 EJ :810401~ DVR-2100 LJ :810701~ DVR-2100 UJ :810701~ DVR-2100 EJ :810701~
J3	#2	C15 IS CHANGED 0.039 → 0.0022	DVR-2000 LJ :810001~ DVR-2000 UJ :810001~ DVR-2000 EJ :810001~ DVR-2100 LJ :810201~ DVR-2100 UJ :810201~ DVR-2100 EJ :810201~

CARD RACK SV-120 (6/6)/TR-83 BOARD SV-120 (6/6)/TR-83 BOARD CARD RACK

TR-83 BOARD

Envelope Select

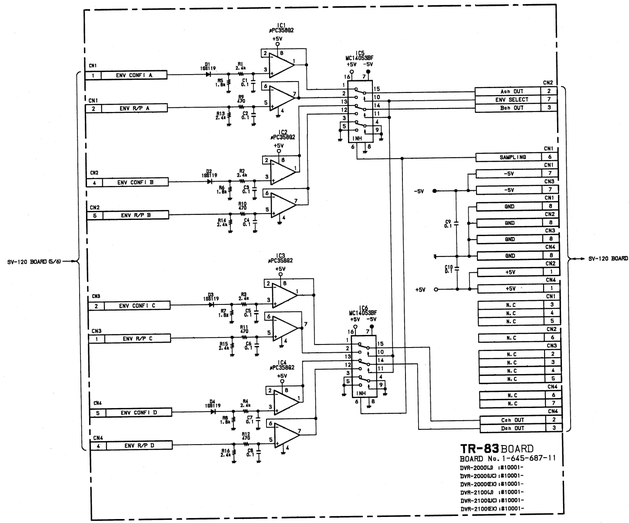

TR-83 BOARD
BOARD No. 1-645-687-11
DVR-2000LJ :810001~
DVR-2000UJ :810001~
DVR-2000EJ :810001~
DVR-2100LJ :810001~
DVR-2100UJ :810001~
DVR-2100EJ :810001~

SV-120 BOARD (6/6)
BOARD NO. 1-639-116-11, -12
DVR-2000 LJ :810001~
DVR-2000 UJ :810001~
DVR-2000 EJ :810001~
DVR-2100 LJ :810001~
DVR-2100 UJ :810001~
DVR-2100 EJ :810001~

SE-144 (1/2) BOARD CARD RACK
CARD RACK SE-144 (1/2) BOARD

SE-144 BOARD (1/2)
Sensor-1

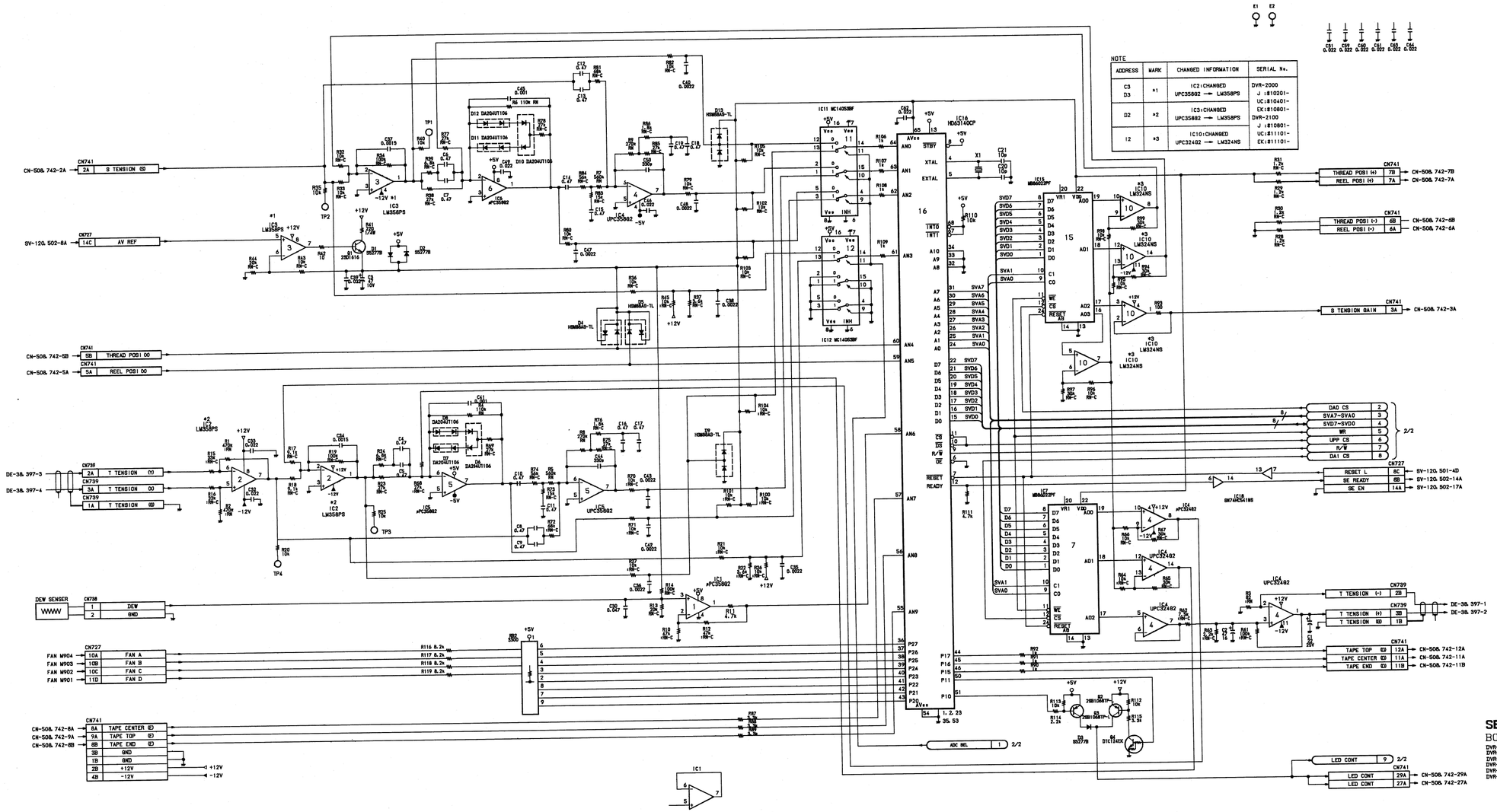
CN-508. 742-2A
S TENSION (2)
SV-120. 502-8A
AV REF
CN-508. 742-5B
THREAD POS1 (0)
CN-508. 742-5A
REEL POS1 (0)
DE-38. 397-3
T TENSION (1)
DE-38. 397-4
T TENSION (0)
T TENSION (2)
DEW SENSER
DEW
GND
FAN M904
FAN M903
FAN M902
FAN M901
FAN A
FAN B
FAN C
FAN D
CN-508. 742-8A
TAPE CENTER (2)
CN-508. 742-9A
TAPE TOP (2)
CN-508. 742-8B
TAPE END (2)
GND
+12V
-12V
THREAD POS1 (+)
REEL POS1 (+)
CN-508. 742-7B
CN-508. 742-7A
THREAD POS1 (-)
REEL POS1 (-)
CN-508. 742-6B
CN-508. 742-6A
S TENSION GAIN
CN-508. 742-3A
DAC CS
SVA7-SVA0
SVD7-SVD0
WR
UPP CS
R/W
DA1 CS
RESET L
SE READY
SE EN
SV-120. 501-4D
SV-120. 502-14A
SV-120. 502-17A
T TENSION (-)
T TENSION (+)
T TENSION (0)
TAPE TOP (0)
TAPE CENTER (0)
TAPE END (0)
CN-508. 742-12A
CN-508. 742-11A
CN-508. 742-11B
LED CONT
CN-508. 742-29A
CN-508. 742-27A
ADC SEL
IC11 MC14053BF
IC12 MC14053BF
IC16 HD63140CP
IC15 MB86022PF
IC17 MB86022PF
IC18 SN74HC541NS
IC1 μPC358G2
IC2 LM358PS
IC3 LM358PS
IC4 UPC324G2
IC5 UPC358G2
IC6 μPC358G2
IC10 LM324NS
D12 DA204UT106
D11 DA204UT106
D10 DA204UT106
D6 DA204UT106
D7 DA204UT106
D8 DA204UT106
D9 DA204UT106
D13 HSM88AS-TL
D14 HSM88AS-TL
D15 HSM88AS-TL
D16 HSM88AS-TL
Q1 2SD1616
Q2 2SB1068TP
Q3 2SB1068TP
Q4 DTC124EK
D3 SS277B
D4 SS277B
D5 SS277B
D6 SS277B
X1 20.0MHz
C20 10p
C21 10p
R110 10k
R111 4.7k
R112 10k
R113 10k
R114 2.2k
R115 3.3k
R116 8.2k
R117 8.2k
R118 8.2k
R119 8.2k
R11 4.7k
R12 10k
R13 10k
R41 1.2k
R42 10k
R43 10k
R44 20k
R45 10k
R46 10k
R47 10k
R48 10k
R49 10k
R50 10k
R51 1.2k
R52 1.2k
R53 1.2k
R54 1.2k
R55 1.2k
R56 1.2k
R57 1.2k
R58 1.2k
R59 1.2k
R60 1.2k
R61 1.2k
R62 1.2k
R63 1.2k
R64 10k
R65 10k
R66 10k
R67 10k
R68 10k
R69 10k
R70 10k
R71 10k
R72 10k
R73 10k
R74 10k
R75 10k
R76 10k
R77 10k
R78 10k
R79 10k
R80 10k
R81 10k
R82 10k
R83 10k
R84 10k
R85 10k
R86 10k
R87 10k
R88 10k
R89 10k
R90 10k
R91 10k
R92 10k
R93 10k
R94 10k
R95 10k
R96 10k
R97 10k
R98 10k
R99 10k
R100 10k
R101 10k
R102 10k
R103 10k
R104 10k
R105 10k
R106 10k
R107 1k
R108 1k
R109 1k
R110 10k
R111 4.7k
R112 10k
R113 10k
R114 2.2k
R115 3.3k
R116 8.2k
R117 8.2k
R118 8.2k
R119 8.2k
R120 10k
R121 10k
R122 10k
R123 10k
R124 10k
R125 10k
R126 10k
R127 10k
R128 10k
R129 10k
R130 10k
R131 10k
R132 10k
R133 10k
R134 10k
R135 10k
R136 10k
R137 10k
R138 10k
R139 10k
R140 10k
R141 10k
R142 10k
R143 10k
R144 20k
R145 10k
R146 10k
R147 10k
R148 10k
R149 10k
R150 10k
R151 10k
R152 10k
R153 10k
R154 10k
R155 10k
R156 10k
R157 10k
R158 10k
R159 10k
R160 10k
R161 10k
R162 10k
R163 10k
R164 10k

SE-144 BOARD (2/2)

Sensor-1

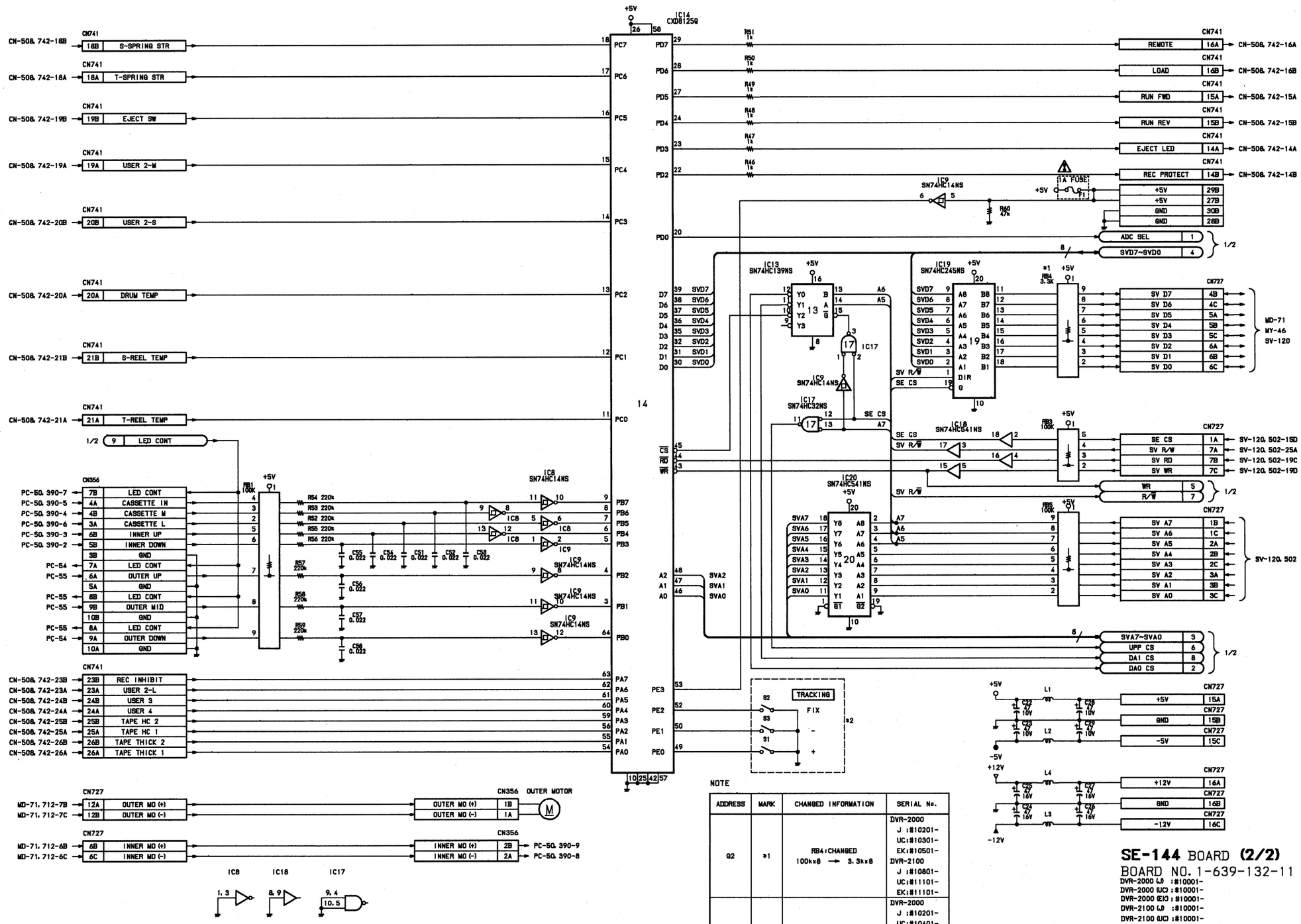

NOTE

ADDRESS	MARK	CHANGED INFORMATION	SERIAL No.
G2	*1	RB4:CHANGED 100k×8 → 3.3k×8	DVR-2000 J :#10201- UC:#10301- EK:#10501- DVR-2100 J :#10801- UC:#11101- EK:#11101-
F4	*2	S1, S2, AND S3 ARE DELETED	DVR-2000 J :#10201- UC:#10401- EK:#10601- DVR-2100 J :#10801- UC:#11101- EK:#11101-

SE-144 BOARD **(2/2)**

BOARD NO. 1-639-132-11

DVR-2000 (J) :#10001-
DVR-2000 (UC) :#10001-
DVR-2000 (EK) :#10001-
DVR-2100 (J) :#10001-
DVR-2100 (UC) :#10001-
DVR-2100 (EK) :#10001-

19-121

CN-508 BOARD

SE-144 Board Relaying

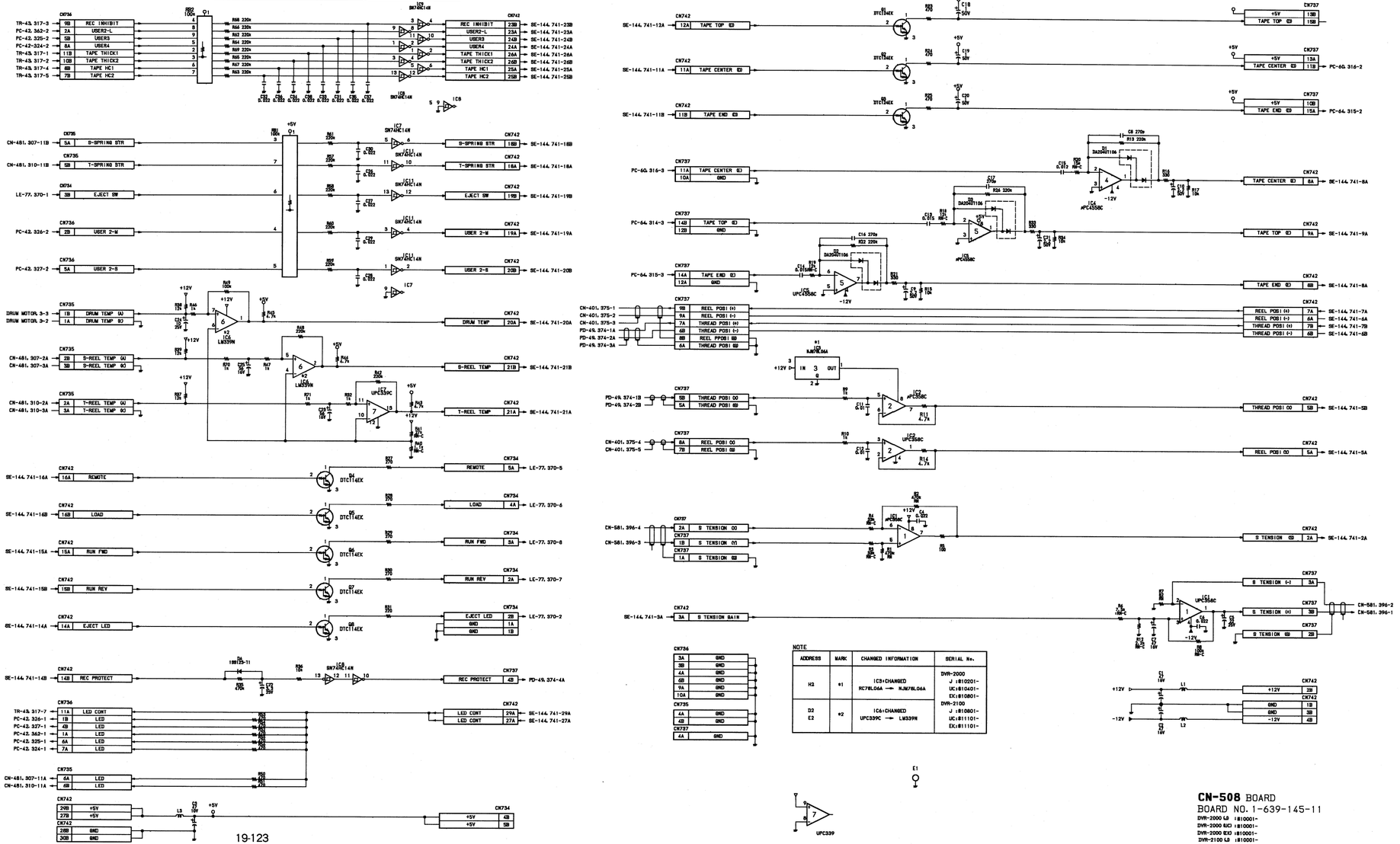

CARD RACK MD-71 (1/3) BOARD MD-71 (1/3) BOARD CARD RACK

MD-71 BOARD (1/3)

Motor Driver

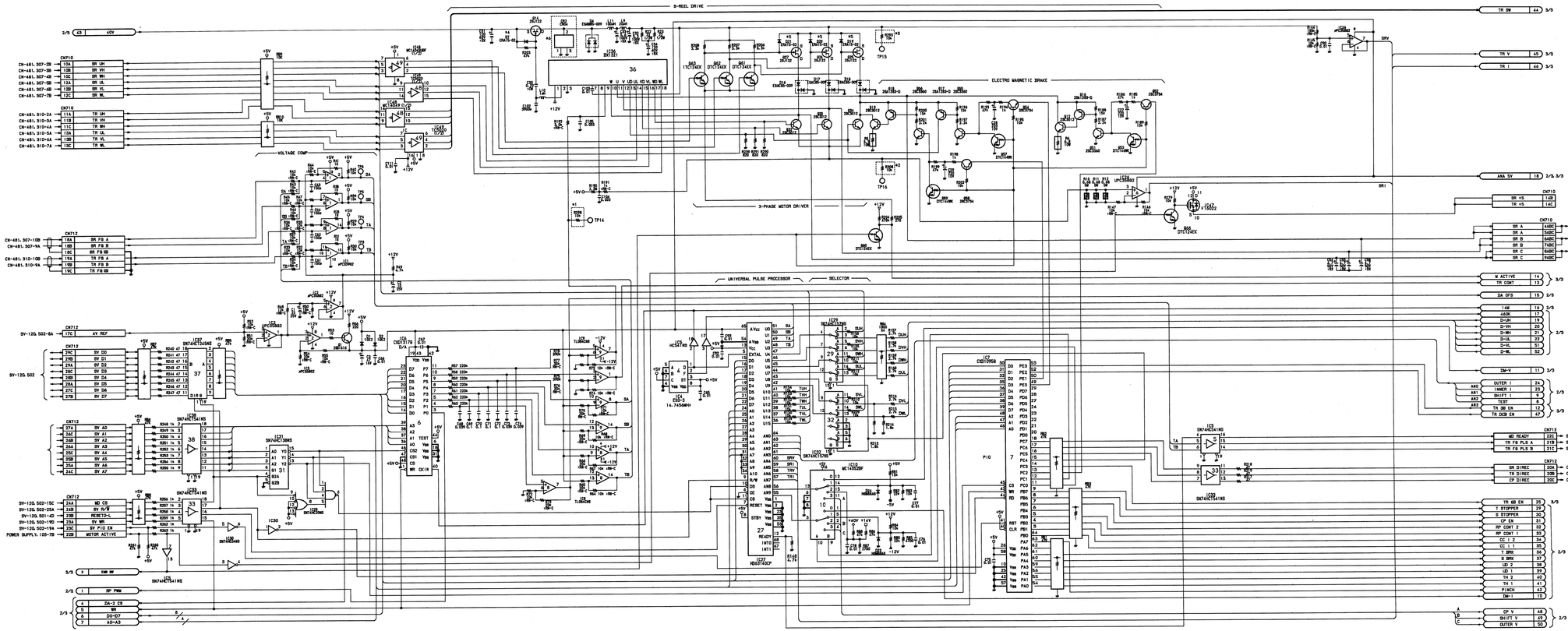

NOTE			
ADDRESS	MARK	CHANGED INFORMATION	SERIAL NO.
Q2	*1	R298 IS ADDED	DVR-2000 J :#810201- UC:#810201- EX:#810401-
I2	*2	R308 IS ADDED	DVR-2100 J :#810701- UC:#810701- EX:#810701-
I1	*3	R293 IS ADDED	DVR-2000 J :#810201- UC:#810601- EX:#810501-
F1	*4	D7:CHANGED ERB44-02 → ERA15-02	DVR-2100 J :#810901- UC:#811101- EX:#811101-
I1:D19 I1:D20 H1:D21	*5	D19:D21:CHANGED ERB44-02 → ERA15-02	DVR-2000 J :#810401- UC:#810901- EX:#811201- DVR-2100 J :#811101- UC:#811201- EX:#811201-
Q1	*6	CR2 IS DELETED.	

MD-71 BOARD **(1/3)**

BOARD NO. 1-639-122-11. -12

DVR-2000 LJ :#810001-
DVR-2000 KJ :#810001-
DVR-2000 EX0 :#810001-
DVR-2100 LJ :#810001-
DVR-2100 KJ :#810001-
DVR-2100 EX0 :#810001-

19-125

MD-71 BOARD (2/3)

Motor Driver

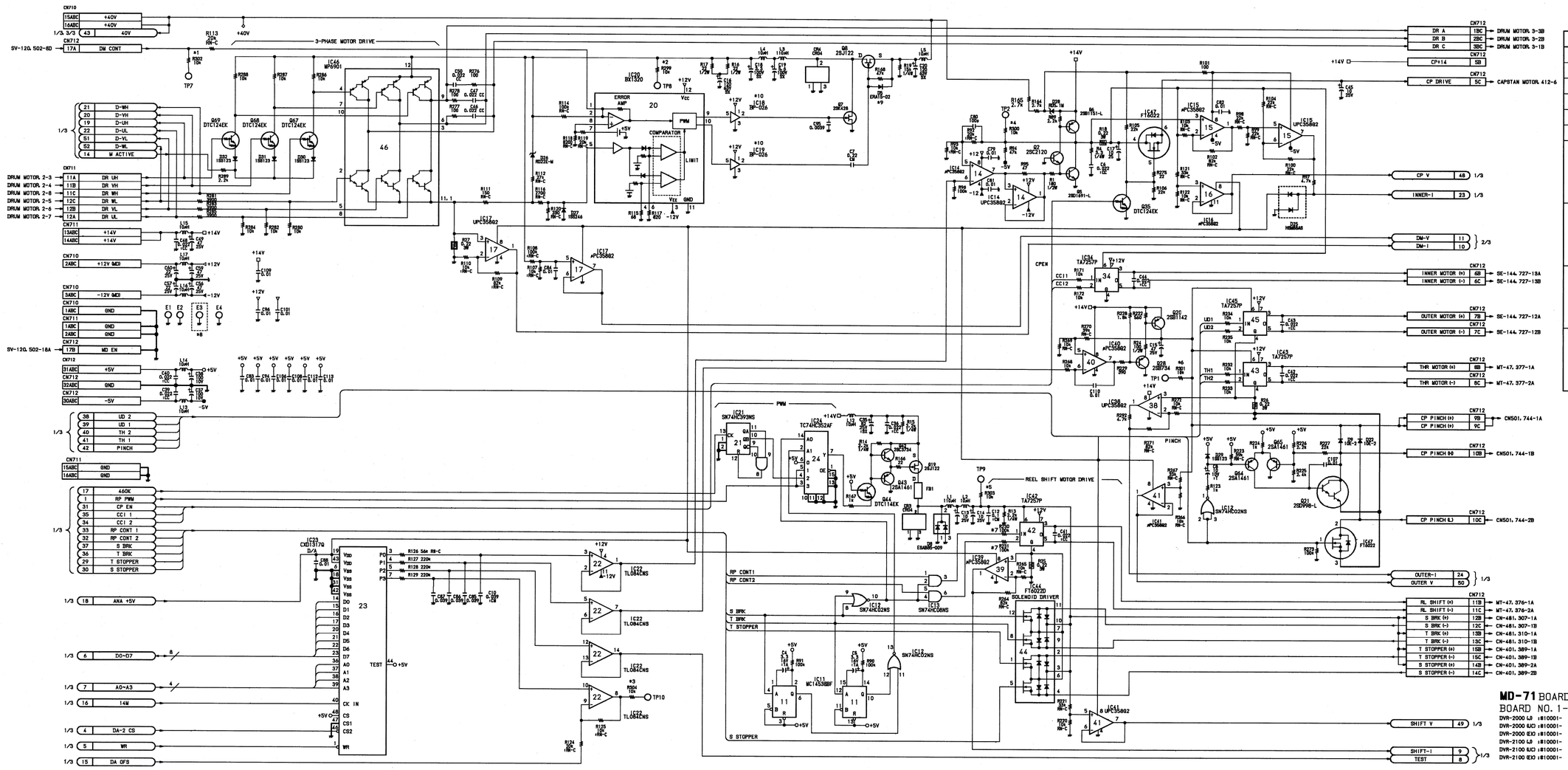

NOTE

ADDRESS	MARK	CHANGED INFORMATION	SERIAL NO.
C1	*1	R302 IS ADDED	DVR-2000 J :#10201- UC:#10201- EK:#10401- DVR-2100 J :#10701- UC:#10701- EK:#10701-
F1	*2	R299 IS ADDED	
F5	*3	R304 IS ADDED	
H1	*4	R300 IS ADDED	
H4	*5	R303 IS ADDED	
I3	*6	R301 IS ADDED	
H4	*7	R230 AND R231 ARE CHANGED. 10K → 100K	DVR-2000 J :#10201- UC:#10301- EK:#10401- DVR-2100 J :#10601- UC:#10601- EK:#10601-
C2	*8	E3 IS DELETED	DVR-2000 J :#10201- UC:#10401- EK:#10601- DVR-2100 J :#10601- UC:#11101- EK:#11101-
B1	*9	D5:CHANGED ERB44-02 → ERA15-02	DVR-2000 J :#10201- UC:#10601- EK:#11001- DVR-2100 J :#10901- UC:#11101- EK:#11101-
F1	*10	IC1& IC19:CHANGED BX1281 → BP-026	DVR-2000 J :#10301- UC:#10801- EK:#11101- DVR-2100 J :#11001- UC:#11101- EK:#11101-

MD-71 BOARD **(2/3)**

BOARD NO. 1-639-122-11, -12

DVR-2000 LJ :#10001-
DVR-2000 EJ:#10001-
DVR-2000 EK:#10001-
DVR-2100 LJ :#10001-
DVR-2100 EJ:#10001-
DVR-2100 EK:#10001-

CARD RACK MD-71 (3/3) BOARD

MD-71 BOARD (3/3)
Motor Driver

NOTE

ADDRESS	MARK	CHANGED INFORMATION	SERIAL NO.
D2	#1	R306 IS ADDED	DVR-2000 J :#10201- UC:#10201- EX:#10401- DVR-2100 J :#10701- UC:#10701- EX:#10701-
G1	#2	R305 IS ADDED	
F4	#3	R307 IS ADDED	
D1	#4	D6:CHANGED ERB44-02 → ERA15-02	DVR-2000 J :#10201- UC:#10601- EX:#11001-
F1	#5	D10-D12:CHANGED ERB44-02 → ERA15-02	DVR-2100 J :#10901- UC:#11101- EX:#11101-
D1	#6	CR1 IS DELETED.	DVR-2000 J :#10401- UC:#10901- EX:#11201- DVR-2100 J :#11101- UC:#11201- EX:#11201-

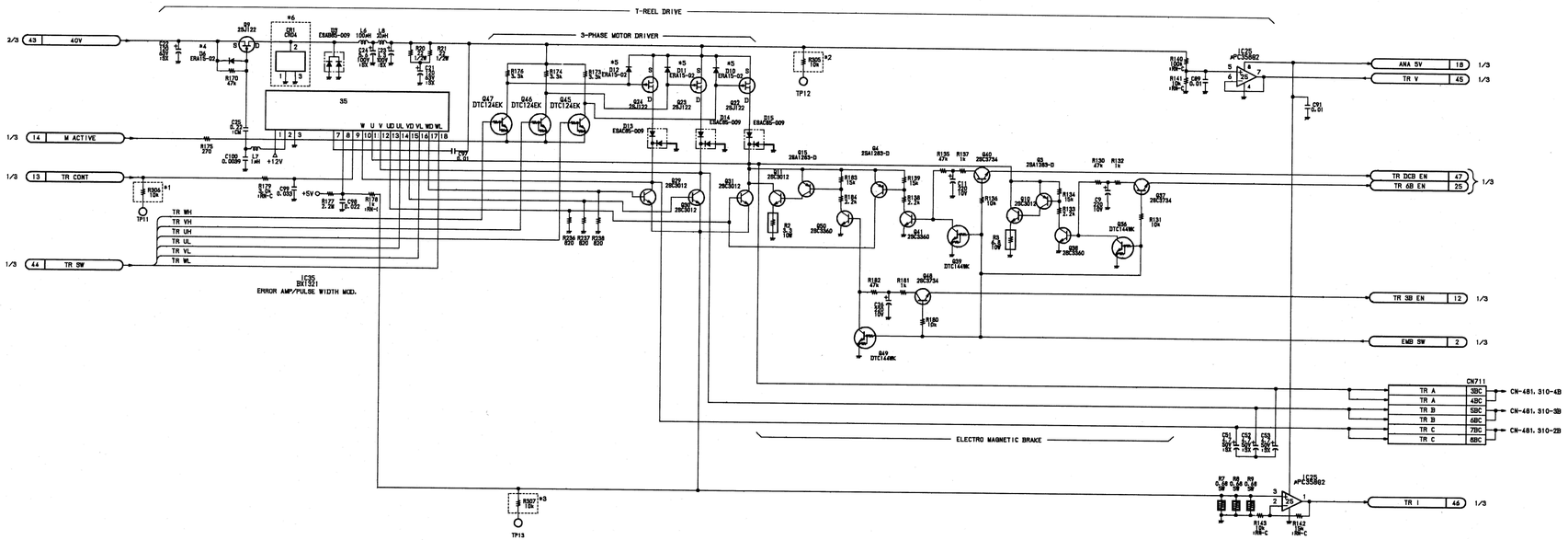

MD-71 BOARD **(3/3)**
BOARD NO. 1-639-122-11, -12

DVR-2000 LJ :#10001-
DVR-2000 UC :#10001-
DVR-2000 EX :#10001-
DVR-2100 LJ :#10001-
DVR-2100 UC :#10001-
DVR-2100 EX :#10001-

19-129

MY-46 BOARD MY-46 BOARD

MY-46 BOARD
NOV-RAM/Timer

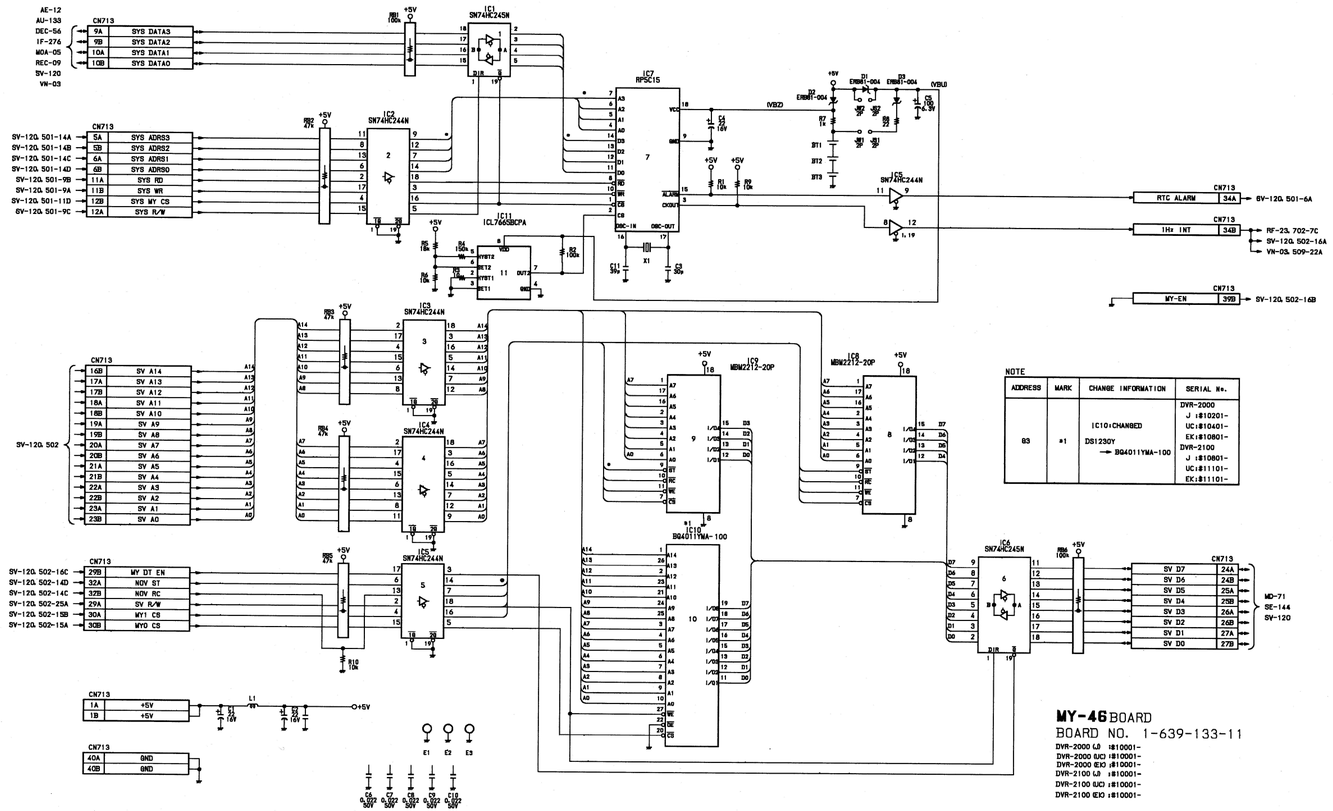

NOTE

ADDRESS	MARK	CHANGE INFORMATION	SERIAL No.
83	*1	IC10:CHANGED DS1230Y → BQ4011YMA-100	DVR-2000 J :810201- UC:810401- EX:810801- DVR-2100 J :810801- UC:811101- EX:811101-

MY-46 BOARD
BOARD NO. 1-639-133-11

DVR-2000 LJ :810001-
DVR-2000 UC) :810001-
DVR-2000 EX) :810001-
DVR-2100 LJ :810001-
DVR-2100 UC) :810001-
DVR-2100 EX) :810001-

19-130

VIO-15 BOARD

VIO-15 BOARD

Digital Video I/O

NOTE

ADDRESS	MARK	CHANGED INFORMATION	SERIAL NO.
D1	*1	TP6 IS ADDED	DVR-2000 J :810201- UC:810201- EK:810301- DVR-2100 J :810601- UC:810601- EK:810601-
F2	*2	D2 IS DELETED. AND Q2 IS ADDED. D2:1S1587	
H2	*3	CN102 AND JS1 ARE ADDED.	
C3	*4	R187 THRU R208 ARE ADDED.	DVR-2000 J :810201- UC:810301- EK:810601- DVR-2100 J :810801- UC:811101- EK:811101-
C5	*5	R209 THRU R230 ARE ADDED.	
H2	*6	CN102 IS DELETED AND JP2 IS ADDED	
H2	*7	CN101 IS DELETED AND JP1 IS ADDED	

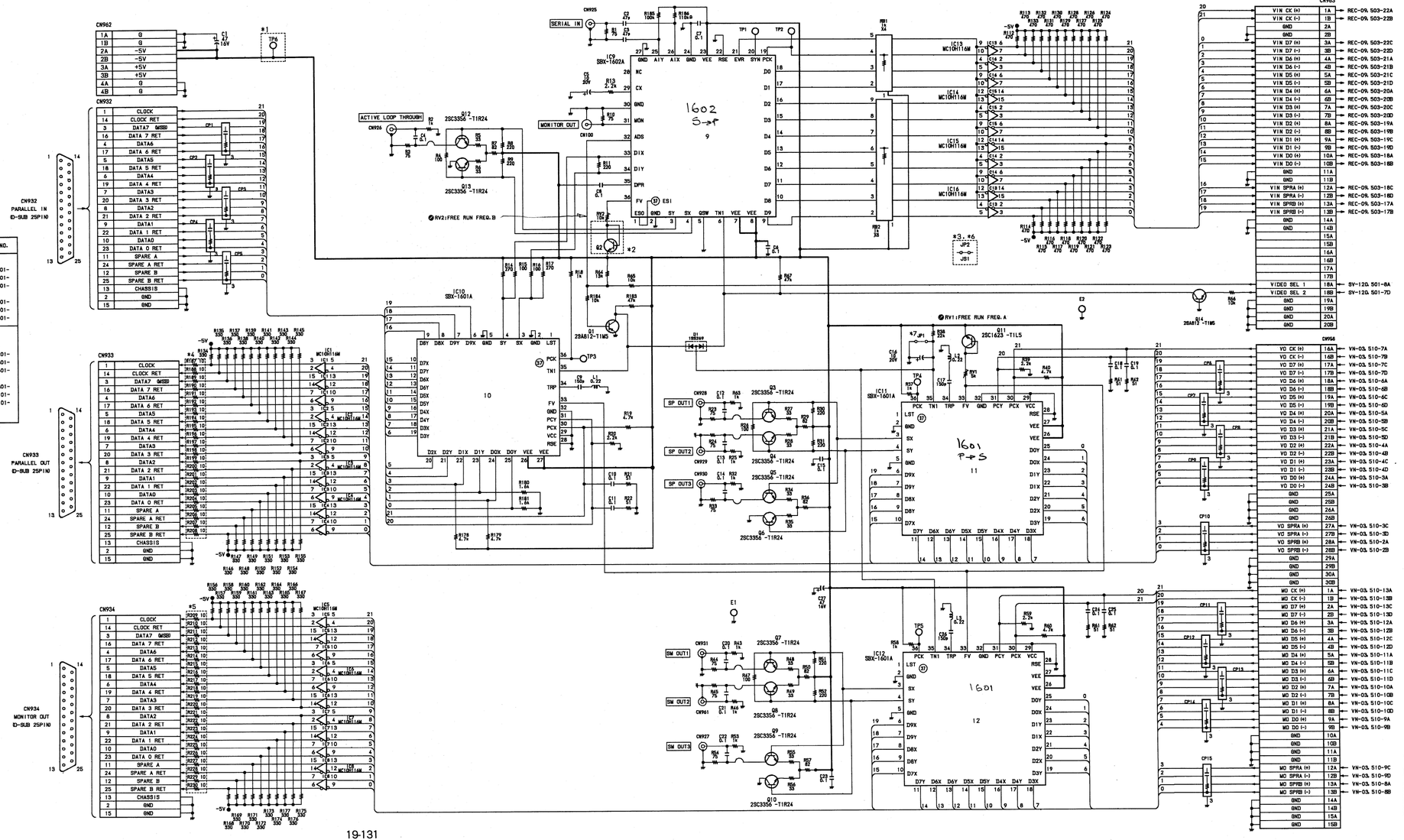

VIO-15 BOARD
BOARD NO. 1-639-126-11, -12, -13

DVR-2000 LB :810001-
DVR-2000 UC3 :810001-
DVR-2000 EK3 :810001-
DVR-2100 LB :810001-
DVR-2100 UC3 :810001-
DVR-2100 EK3 :810001-

19-131

VIO-16 BOARD VIO-16 BOARD

VIO-16 BOARD

Reference Video I/O

NOTE

ADDRESS	MARK	CHANGED INFORMATION	SERIAL NO.
F2	*1	C1:39p → 47p	DVR-2000 J :#10201- UC:#10201- EK:#10301- DVR-2100 J :#10601- UC:#10601- EK:#10601-
F1	*2	REFERENCE NO. IS CHANGED:R42 → R18	
F4	*3	TP12 IS ADDED.	
B3	*4	D1 → Q1 D1 IS DELETED AND Q1 IS ADDED D1:1SS187	
	*5	R42 IS ADDED	
I3	*6	TP8, TP9, TP10 AND TP11 ARE ADDED.	
I1	*7	IC5:CHANGED CXD8069G → CXD8069BG	DVR-2000 J :#10201- UC:#10501- EK:#10901- DVR-2100 J :#10901- UC:#11101- EK:#11101-

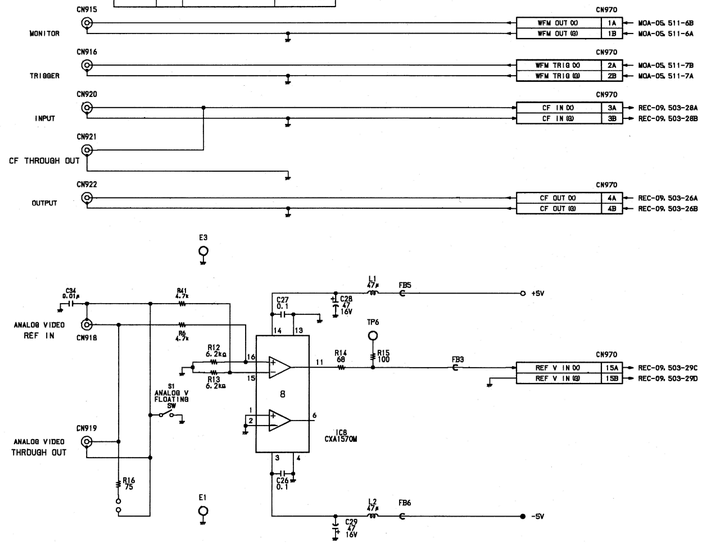

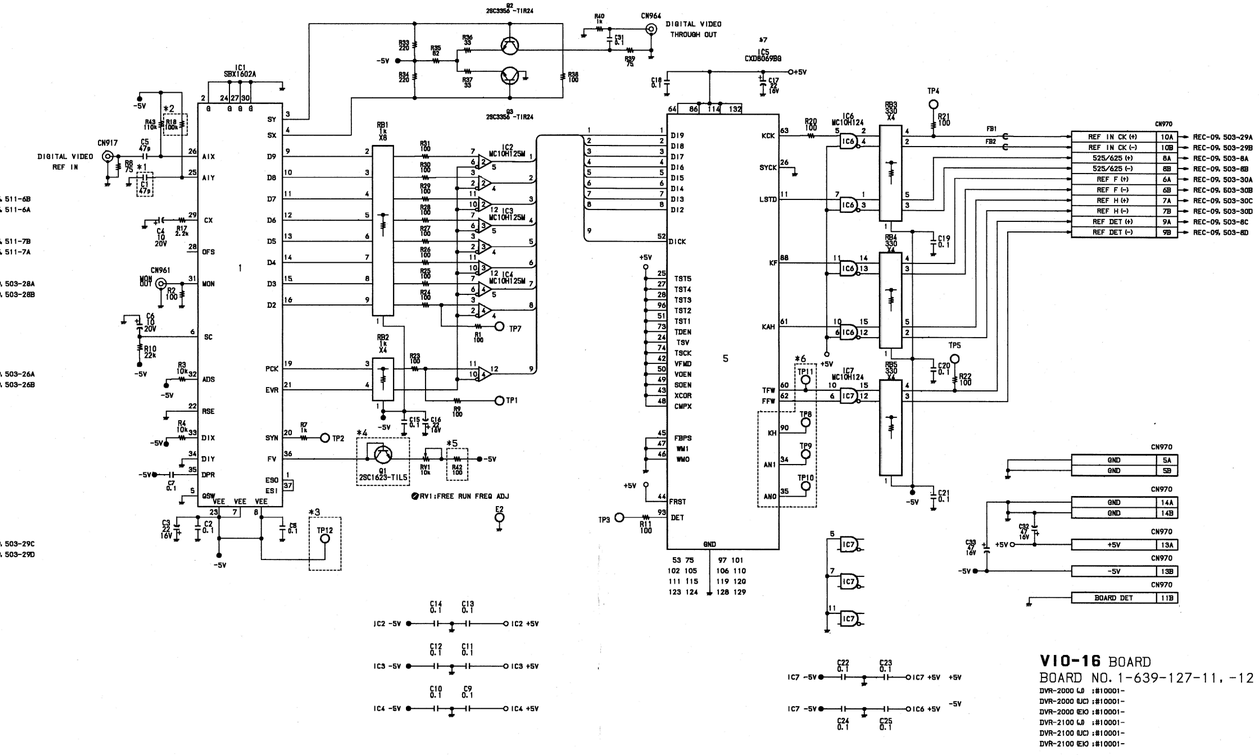

VIO-16 BOARD

BOARD NO. 1-639-127-11, -12

DVR-2000 LJ :#10001-
DVR-2000 UC :#10001-
DVR-2000 EK :#10001-
DVR-2100 LJ :#10001-
DVR-2100 UC :#10001-
DVR-2100 EK :#10001-

19-132

DVR-2000	DVR-2100
J : S/N 10201 and higher	J : S/N 10801 and higher
UC : S/N 10301 and higher	UC : S/N 11101 and higher
EK : S/N 10601 and higher	EK : S/N 11101 and higher

IF-276 BOARD IF-276 BOARD

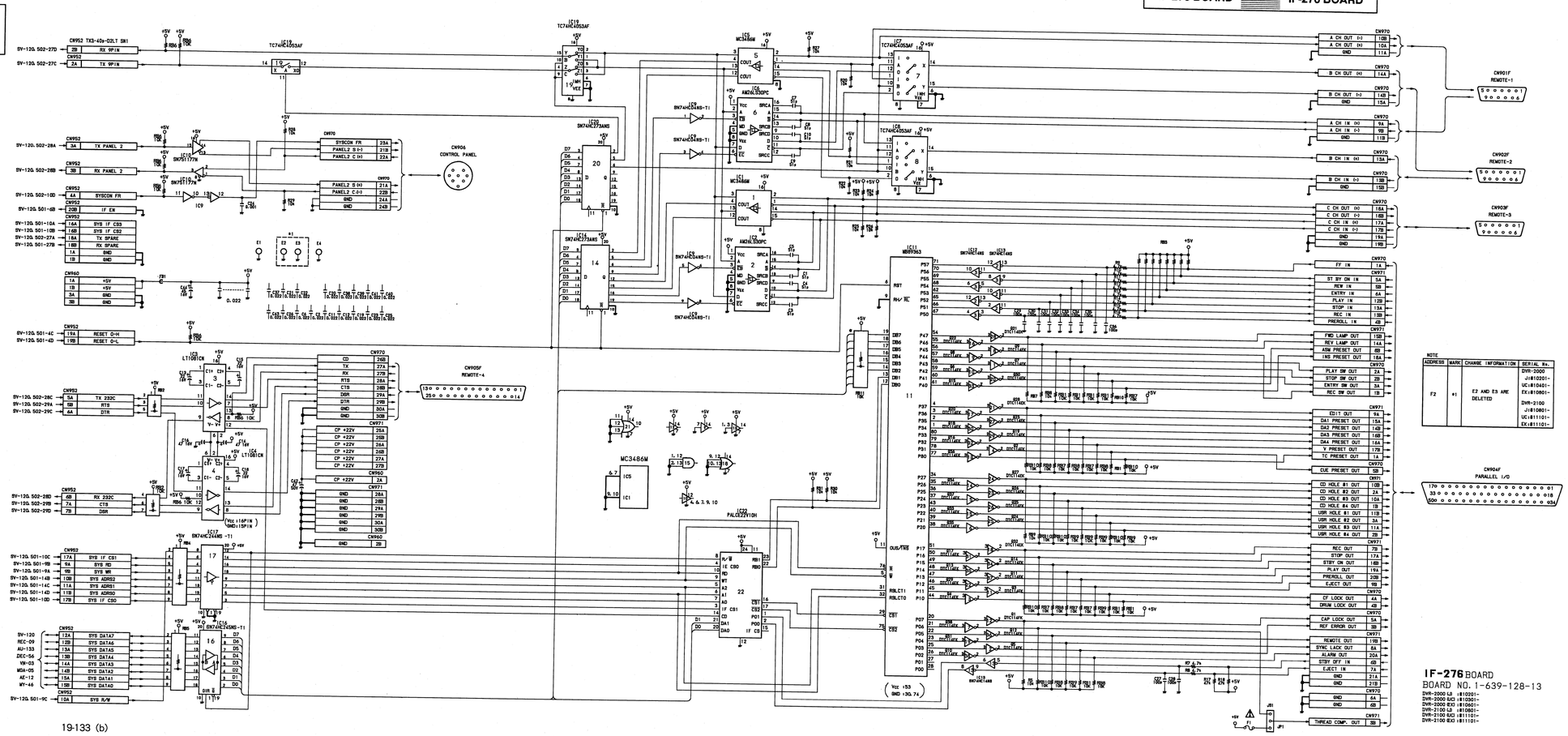

NOTE			
ADDRESS	MARK	CHANGE INFORMATION	SERIAL No.
F2	+1	E2 AND E3 ARE DELETED	DVR-2000 J:810201- UC:810401- EK:810601- DVR-2100 J:810801- UC:811101- EK:811101-

IF-276 BOARD IF-276 BOARD

IF-276 BOARD
System Control I/O

DVR-2000	DVR-2100
J : S/N 10201 and higher	J : S/N 10801 and higher
UC : S/N 10301 and higher	UC : S/N 11101 and higher
EK : S/N 10601 and higher	EK : S/N 11101 and higher

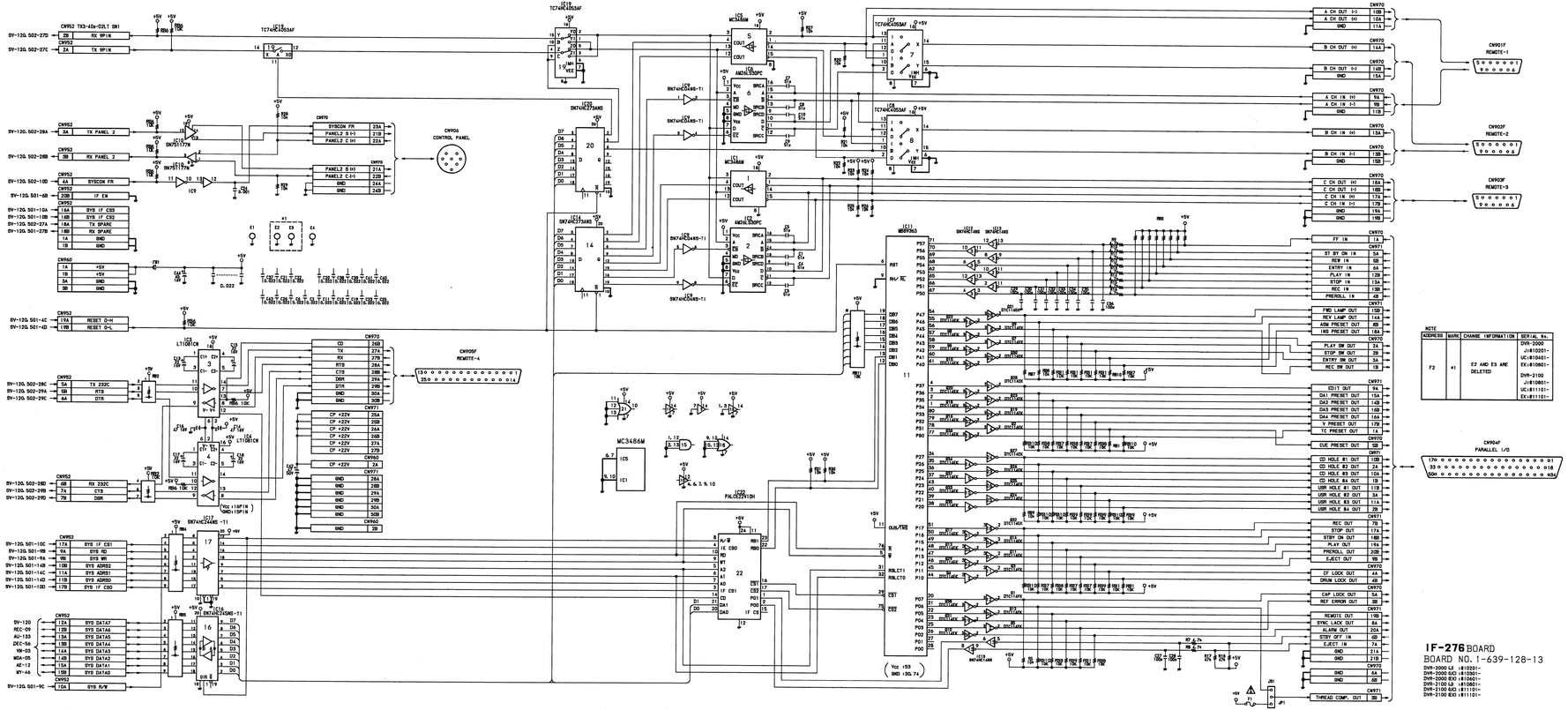

NOTE			
ADDRESS	MARK	CHANGE INFORMATION	SERIAL No.
F2	+1	E2 AND E3 ARE DELETED	DVR-2000 J:810201- UC:810401- EK:810601- DVR-2100 J:810801- UC:811101- EK:811101-

IF-276 BOARD
BOARD NO. 1-639-128-13

DVR-2000 LS :810201-
DVR-2000 SCO :810301-
DVR-2000 EK3 :810601-
DVR-2100 LS :810801-
DVR-2100 SCO :811101-
DVR-2100 EK3 :811101-

19-133 (b)

IF-276 BOARD IF-276 BOARD

IF-276 BOARD

System Control I/O

DVR-2000	DVR-2100
J ; S/N 10001 through 10198	J ; S/N 10001 through 10799
UC ; S/N 10001 through 10299	UC ; S/N 10001 through 11099
EK ; S/N 10001 through 10599	EK ; S/N 10001 through 11099

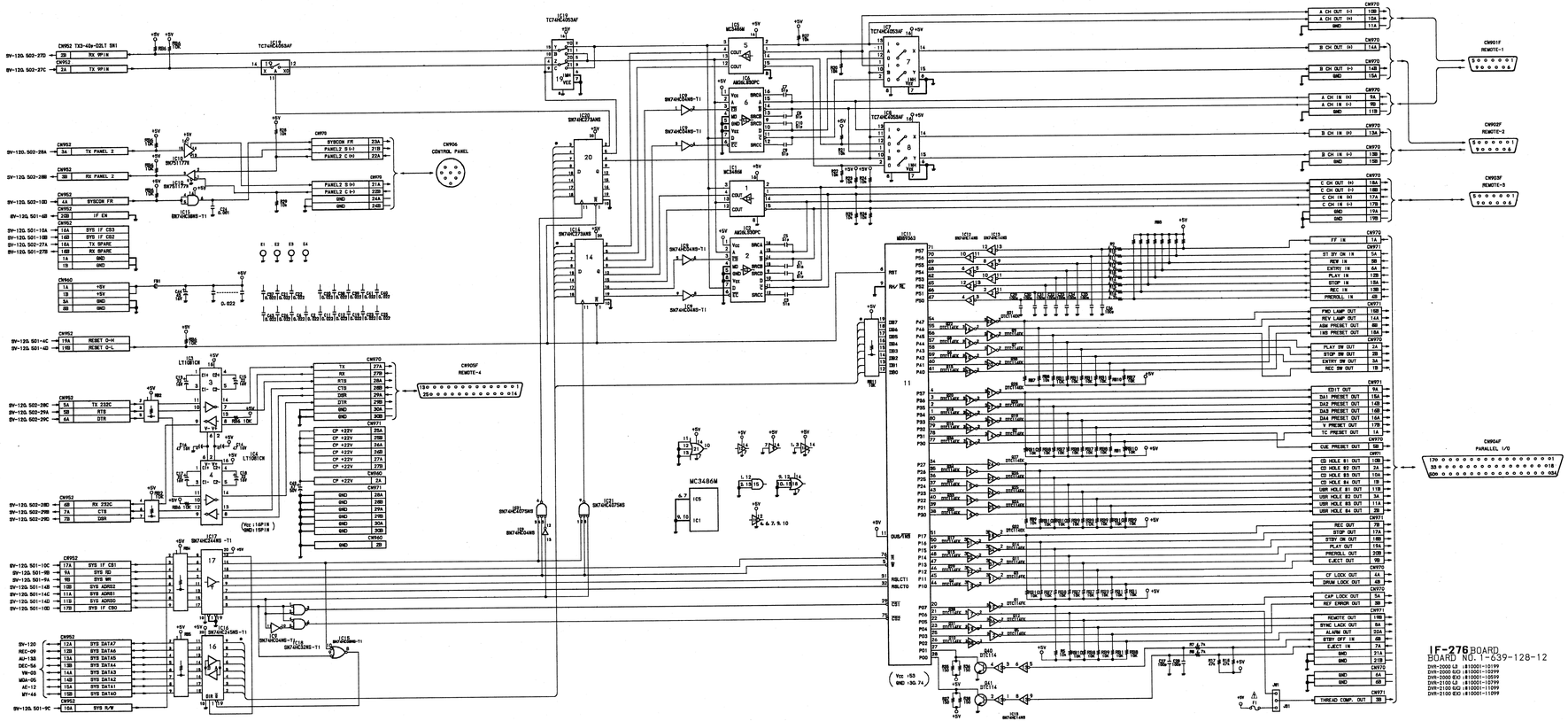

PD-49 BOARD

Power Rotary Transformer Driver

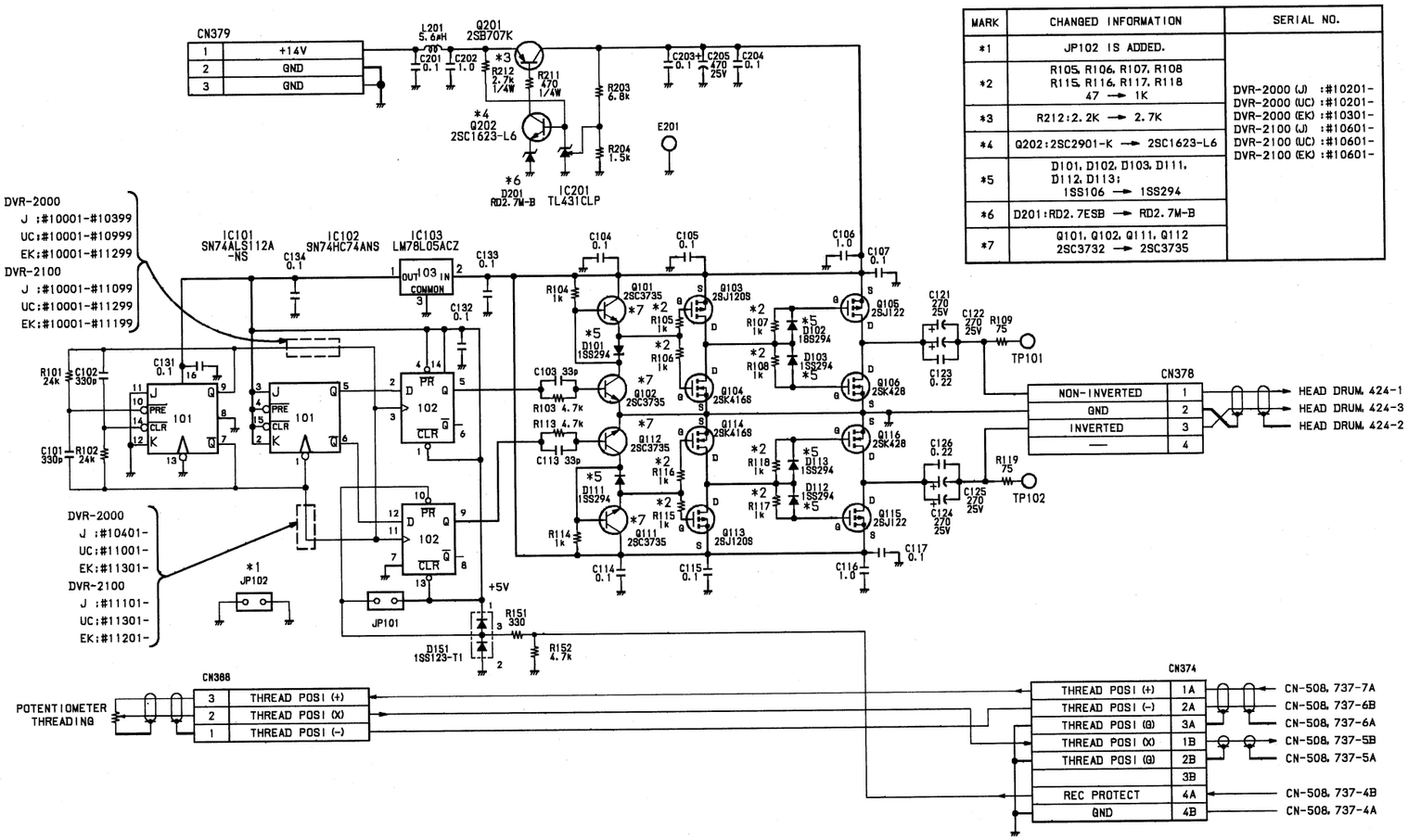

MARK	CHANGED INFORMATION	SERIAL NO.
*1	JP102 IS ADDED.	DVR-2000 (J) :#10201- DVR-2000 (UC) :#10201- DVR-2000 (EK) :#10301- DVR-2100 (J) :#10601- DVR-2100 (UC) :#10601- DVR-2100 (EK) :#10601-
*2	R105, R106, R107, R108 R115, R116, R117, R118 47 → 1K	
*3	R212:2.2K → 2.7K	
*4	Q202:2SC2901-K → 2SC1623-L6	
*5	D101, D102, D103, D111, D112, D113: 1SS106 → 1SS294	
*6	D201:RD2.7ESB → RD2.7M-B	
*7	Q101, Q102, Q111, Q112 2SC3732 → 2SC3735	

PD-49 BOARD
BOARD NO. 1-639-140-11, -12

DVR-2000 (J) :#10001-
DVR-2000 (UC) :#10001-
DVR-2000 (EK) :#10001-
DVR-2100 (J) :#10001-
DVR-2100 (UC) :#10001-
DVR-2100 (EK) :#10001-

19-135

POWER SUPPLY CT-133, FU-53, PS-256, RE-52
CT-133, FU-53, PS-256, RE-52 POWER SUPPLY
POWER SUPPLY CT-133, FU-53, PS-256, RE-52

POWER SUPPLY
CT-133 BOARD
FU-53 BOARD
PS-256 BOARD
RE-52 BOARD

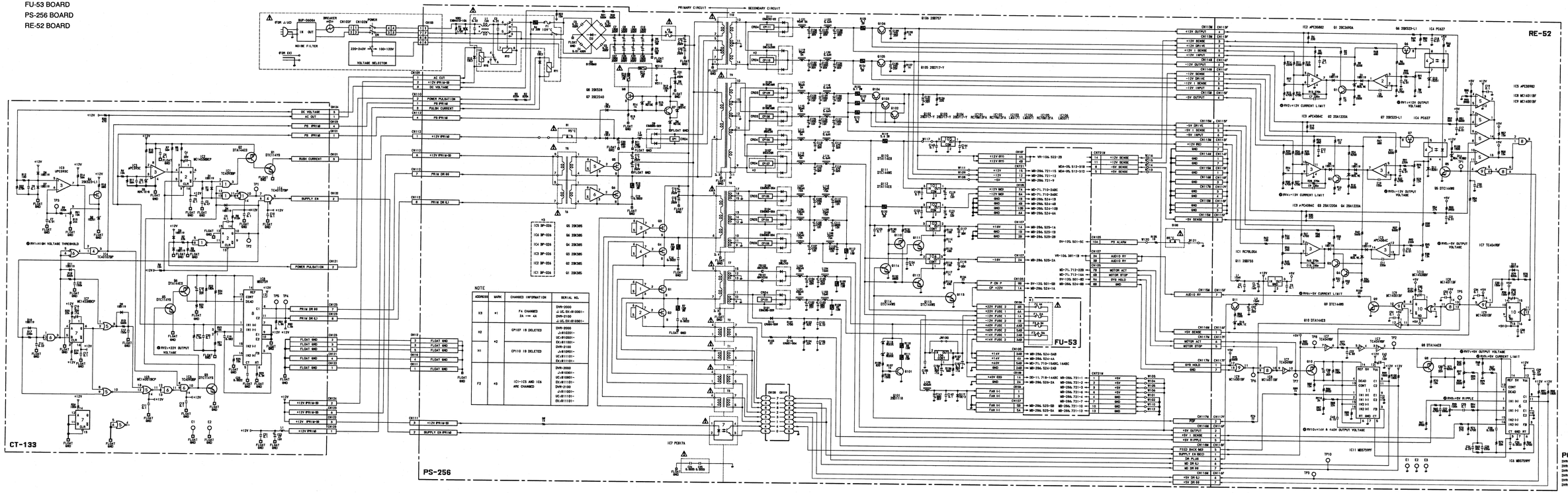

19-137

MB-285 BOARD (1/3)
Mother Board

RF-23

CK701

	C	B	A
32	0	0	0
31	+12V	+12V	+12V
30	-12V	-12V	-12V
29			
28			
27			
26			
25			
24			
23			
22			
21			
20			
19			
18			
17			
16			
15			
14			
13			
12		ENV REC	
11			
10		ENV STUNT A	ENV CONF I A
9			
8		ENV STUNT B	ENV CONF I B
7			
6		ENV STUNT C	ENV CONF I C
5			
4		ENV STUNT D	ENV CONF I D
3			
2		SYSCON FR	PB PULSE
1	0	0	0

	C	B	A
16	0	0	0
15	RF EN	RF BUS REQ	RF BUS ACQ
14		RF DATA7	RF ADRS7
13		RF DATA6	RF ADRS6
12		RF DATA5	RF ADRS5
11		RF DATA4	RF ADRS4
10		RF DATA3	RF ADRS3
9		RF DATA2	RF ADRS2
8	1F ERR RF	RF DATA1	RF ADRS1
7	1HZ INT	RF DATA0	RF ADRS0
6	SYS HOLD	RF R/W	RF WR
5	SYS READY	RF DUAL	RF RD
4	RESETO-L	BUSY 1	RF SV CS
3	-5V	-5V	-5V
2	+5V	+5V	+5V
1	0	0	0

	C	B	A
16			
15			
14	RF ADRS11		
13	RF ADRS8	RF ADRS9	RF ADRS10
12			
11	AUX 1	AUX 2	AUX 3
10	AUX 4		
9			
8			
7			
6			
5			
4			
3			
2			
1			

SE-144

CK727

	C	B	A
16	-12V	0	+12V
15	-5V	0	+5V
14	AV REF		SE EN
13	AUX 1	INNER MO I-3	INNER MO IH
12	AUX 2	OUTER MO I-3	OUTER MO IH
11	AUX 3		FAN D
10	FAN C	FAN B	FAN A
9	AUX 4		
8	RESETO-L	SE READY	
7	SV WR	SV RD	SV R/W
6	SV D0	SV D1	SV D2
5	SV D3	SV D4	SV D5
4	SV D6	SV D7	
3	SV A0	SV A1	SV A2
2	SV A3	SV A4	SV A5
1	SV A6	SV A7	SE CS

DVR-2100 ONLY

CK722
(TO CN-501)

1	STB 00	
2	-5V	
3	STB 2 D1	
4	STB 3 D0	
5	STB 1 D1	
6	STB 1 D0	
7	DT DRV 2 00	
8	DT DRV 1 00	

CK720
(TO DRUM MOTOR, CAPSTAN MOTOR)

	B	A
1	DRUM FG (A)	CAPS FG (A)
2	DRUM FG (B)	CAPS FG (B)
3	DRUM PG 00	CAPS PG 00
4	DRUM PG (B)	+12V
5	DRUM PG (B)	

DVR-2100 ONLY

DT-26

CK704

	C	B	A
32	0	0	0
31	+12V	+12V	+12V
30	-12V	-12V	-12V
29	CAPS FG (B)	CAPS FG (B)	CAPS FG (A)
28			
27	DRUM FG (B)	DRUM FG (B)	DRUM FG (A)
26			
25			
24			
23			
22			
21			
20			
19			
18			
17			
16			
15			
14			
13			
12			
11			
10		DT-VN-3	DT-VN-2
9	DT-VN-1	DT-VN-0	
8	AUX 1	AUX 2	AUX 3
7	AUX 4		
6	RF ADRS11		
5	RF ADRS8	RF ADRS9	RF ADRS10
4			
3			
2	CTL PB	SYSCON FR	PB PULSE
1	0	0	0

CK705

	C	B	A
16	0	0	0
15	DT EN	RF BUS REQ	RF BUS ACQ
14	DT DIR	RF DATA7	RF ADRS7
13	DT ALARM	RF DATA6	RF ADRS6
12		RF DATA5	RF ADRS5
11	SV DT 4	RF DATA4	RF ADRS4
10	SV DT 3	RF DATA3	RF ADRS3
9	SV DT 2	RF DATA2	RF ADRS2
8	SV DT 1	RF DATA1	RF ADRS1
7		RF DATA0	RF ADRS0
6	SYS HOLD	RF R/W	RF WR
5	SYS READY	RF DUAL	RF RD
4	RESETO-L	BUSY 1	RF SV CS
3	-5V	-5V	-5V
2	+5V	+5V	+5V
1	0	0	0

CK706

	C	B	A
16			
15			
14		ENV STUNT A	ENV CONF I A
13			
12		ENV STUNT B	ENV CONF I B
11			
10		ENV STUNT C	ENV CONF I C
9			
8		ENV STUNT D	ENV CONF I D
7			
6			
5	STB 00	STB 2 D1	STB 2 D0
4			
3	STB 00	STB 1 D1	STB 1 D0
2			
1	DD EN	DR SENSE 2	DR SENSE 1
2			
1	DRE 00	DRE 2 D0	DRE 1 D0

DD-11

CK718

	C	B	A
16	0	0	0
15	+12V	+12V	
14	+5V	+5V	
13			
12			
11			
10		DRE 2 D0	DRE 00
9			
8			
7			DR SENSE 1
6			DR SENSE 2
5			
4			
3			
2			
1			

CK716
(TO AH-33, AH-24)

	A	B
1	FULL ERS 00	TC ERS 00
2	FULL ERS (T)	TC ERS (T)
3	FULL ERS 0P	TC ERS 0P
4	CUE ERS 00	CUE ERS (T)
5	CTL ERS 0P	CUE ERS 0P
6	CTL ERS 00	CTL ERS (T)

AE-12

CK707

	C	B	A
32	0	0	0
31	+12V	+12V	+12V
30	-12V	-12V	-12V
29	CTL ERS 00	CTL ERS (T)	CTL ERS 0P
28			
27	FULL ERS 00	FULL ERS (T)	FULL ERS 0P
26			
25			
24	CUE ERS 00	CUE ERS (T)	CUE ERS 0P
23			
22			
21	TC ERS 00	TC ERS (T)	TC ERS 0P
20			
19	AUX 1	AUX 2	AUX 3
18	AUX 4		
17	SYS READY	SYS ADRS2	SYS ADRS1
16	SYS ADRS0	SYS DATA7	SYS DATA6
15	SYS DATA5	SYS DATA4	SYS DATA3
14	SYS DATA2	SYS DATA1	SYS DATA0
13	AE CS1	AE CS0	SYS WR
12	SYS RD	SYS R/W	RESETO-L
11			
10	TC 0EN	TC RD	CTL PB
9			AE/SV SPR
8			
7			CUE MOUT 00
6	TC LOUT 00	TC LOUT 0P	CUE MOUT 0P
5	CUE LOUT 00	CUE LOUT 0P	
4	CUE PB 0 00	CUE PB 0 0P	
3	MFW CTLO 00	MFW CTLO 0P	
2	CUE REC 0 00	CUE REC 0 0P	
1	0	0	0

CK708

	C	B	A
16	G AE GND	G AE GND	G AE GND
15			AE EN
14	CUE IN 00	CUE IN 0P	CUE METER 00
13			CUE METER 0P
12			
11			
10			
9			
8			
7			
6	TC PB 00	TC PB 0P	TC RY
5	PA TC REC 00	PA TC REC (T)	PA TC REC 0P
4	REC CTL 00	REC CTL 0P	
3	-5V	-5V	-5V
2	+5V	+5V	+5V
1	0	0	0

CK709

	C	B	A
16	PA CTL REC 00	PA CTL REC (T)	PA CTL REC 0P
15	DRUM PB 00	DRUM PB 0P	DRUM RY
14			
13			
12	CONF I PB 00	CONF I PB 0P	CONF I RY
11			
10			
9	CUE PB 00	CUE PB 0P	CUE RY
8	PA CUE REC 00	PA CUE REC (T)	PA CUE REC 0P
7			
6			
5		AE +6V	AE -6V
4			
3			
2			
1			

CK723
(TO DRUM MOTOR)

	B	A
1	SV D5	SV A
2	SV D6	SV A1
3	SV D7	SV A2
4		DRUM DIR
5		SV D4
6		SV WL
7		SV WH
8		SV D3
9		SV D2
10		SV D1
11		SV D0
12		SV RD
13		SV R/W
14		SV WR
15		SV CS
16		SV RY
17		SV D0
18		SV D1
19		SV D2
20		SV D3
21		SV D4
22		SV D5
23		SV D6
24		SV D7
25		SV A
26		SV A1
27		SV A2
28		SV A3
29		SV A4
30		SV A5
31		SV A6
32		SV A7

CK715
(TO PA-142)

	A	B
1	PA CUE REC 00	PA CUE REC 0P
2	CUE PB 00	CUE PB 0P
3	CUE PB 0P	CUE PB 00
4	DRUM PB 00	DRUM PB 0P
5	DRUM PB 0P	DRUM PB 00
6	PA CTL REC 00	PA CTL REC 0P
7	CONF I PB 00	CONF I PB 0P
8	CONF I PB 0P	CONF I PB 00
9	TC PB 00	TC PB 0P
10	TC PB 0P	TC PB 00
11	PA TC REC 00	PA TC REC 0P
12	PA TC REC 0P	PA TC REC 00

CK725
(TO CN-481, CN-481 (T), CN-401, MT-47, CAPSTAN MOTOR)

	B	A
1	PA CUE REC (T)	PA CUE REC (T)
2	PA CUE REC 0P	PA CUE REC 00
3	PA CUE REC (T)	PA CUE REC 0P
4	PA CUE REC 00	PA CUE REC (T)
5	PA CTL REC 0P	PA CTL REC 00
6	PA CTL REC (T)	PA CTL REC (T)
7	PA CTL REC 00	PA CTL REC 0P
8	PA TC REC 0P	PA TC REC 00
9	PA TC REC (T)	PA TC REC (T)
10	PA TC REC 00	PA TC REC 0P
11	TC PB 00	TC PB 0P
12	TC PB 0P	TC PB 00
13	PA TC REC 0P	PA TC REC 00
14	PA TC REC 00	PA TC REC (T)

MOTHER BOARD MB-285 (1/3) MB-285 (1/3) MOTHER BOARD

MB-286

CK726
(TO CN-481 (T), CN-481 (2))

	B	A
1	SV D5	SV A
2	SV D6	SV A1
3	SV D7	SV A2
4		DRUM DIR
5		SV D4
6		SV WL
7		SV WH
8		SV D3
9		SV D2
10		SV D1
11		SV D0
12		SV RD
13		SV R/W
14		SV WR
15		SV CS
16		SV RY
17		SV D0
18		SV D1
19		SV D2
20		SV D3
21		SV D4
22		SV D5
23		SV D6
24		SV D7
25		SV A
26		SV A1
27		SV A2
28		SV A3
29		SV A4
30		SV A5
31		SV A6
32		SV A7

MD-71

CK710

	A	B	C
1	0	0	0
2	+12V 0ED	+12V 0ED	+12V 0ED
3	-12V 0ED	-12V 0ED	-12V 0ED
4	SR A	SR A	SR A
5	SR A	SR A	SR A
6	SR B	SR B	SR B
7	SR B	SR B	SR B
8	SR C	SR C	SR C
9	SR C	SR C	SR C
10	SR UH	SR VH	SR WH
11	TR UH	TR VH	TR WH
12	SR UL	SR VL	SR WL
13	TR UL	TR VL	TR WL
14		SR +5V	TR +5V
15	+40V	+40V	+40V
16	+40V	+40V	+40V

CK711

	A	B	C
1	0	0	0
2	0	0	0
3	TR A	TR A	TR A
4	TR A	TR A	TR A
5	TR B	TR B	TR B
6	TR B	TR B	TR B
7	TR C	TR C	TR C
8	TR C	TR C	TR C
9			
10			
11	DR UH	DR VH	DR WH
12	DR UL	DR VL	DR WL
13	+14V	+14V	+14V
14	+14V	+14V	+14V
15	0	0	0
16	0	0	0

CK712

	A	B	C
1	AUX 1	DR A	DR A
2	AUX 2	DR B	DR B
3	AUX 3	DR C	DR C
4	AUX 4		
5		CP +14V	CP DRIVE
6		INNER MO IH	INNER MO I-3
7		OUTER MO IH	OUTER MO I-3
8		THREAD MO IH	THREAD MO I-3
9		CP PINCH IH	CP PINCH IH
10		CP PINCH 0P	CP PINCH 0J
11		RL SHIFT IH	RL SHIFT I-3
12		S-BRK IH	S-BRK I-3
13		T-BRK IH	T-BRK I-3
14		S-STOPPER IH	S-STOPPER I-3
15		T-STOPPER IH	T-STOPPER I-3
16	MOTOR STOP		
17	DM CONT	MD EN	AV REF
18	SR FB 0AJ	SR FB 0B	SR FB 0A
19	TR FB 0AJ	TR FB 0B	TR FB 0B
20	SR DIREC	TR DIREC	CP DIREC
21		TR FB PLS A	TR FB PLS B
22	SYS HOLD	MOTOR ACT	MD READY
23	SV WR	RESETO-L	SV P1D EN
24	MD CS	SV R/W	SV A7
25	SV A6	SV A5	SV A4
26	SV A3	SV A2	SV A1
27	SV A0	SV D7	SV D6
28	SV D5	SV D4	SV D3
29	SV D2	SV D1	SV D0
30	-5V	-5V	-5V
31	+5V	+5V	+5V
32	0	0	0

CK738

	A	B
1	DRUM FG 0B	
2	DRUM FG 00	
3	CAPS FG 0B	CAPS FG 0A)
4		CAPS FG 0B
5	DRUM FG 0B	
6	DRUM FG 00	DRUM FG 0B
7	0	0
8	0	0
9	AUX 1	DM CONT
10	AUX 2	
11	0	0
12	0	0
13	MFW CTLO 0B	ENV REC
14	MFW CTLO 00	
15	CUE METER 0B	TC LOUT 0B
16	CUE METER 00	TC LOUT 00
17	CUE MOUT 0B	CUE LOUT 0B
18	CUE MOUT 00	CUE LOUT 00
19	0	0
20	0	0
21	REC CTL 0B	AUX 3
22	REC CTL 00	AUX 4
23		CUE IN 0B
24		CUE IN 00
25	CUE REC 0 0B	CUE PB 0 0B
26	CUE REC 0 00	CUE PB 0 00
27	0	0
28	0	0
29	TR FB PLS B	TR FB PLS A
30	SV DT 3	SV DT 4
31	SV DT 1	SV DT 2
32		DT-VN-3
33	DT-VN-2	DT-VN-1
34	DT-VN-0	DRUM DIR
35	TC 0EN	CTL PB
36		TC RD
37	MOTOR STOP	SYSCON FR
38	MD EN	PB PULSE
39	DT EN	DD EN
40	AE EN	RF EN
41	AE CS0	SE EN
42	AE CS1	WY EN
43	SYS RD	AE/SV SPR
44	SYS WR	SYS R/W
45	SYS DATA2	SYS DATA0
46	SYS DATA3	SYS DATA1
47	SYS DATA4	SYS DATA4
48	SYS DATA7	SYS DATA5
49	SYS ADRS2	SYS ADRS0
50	SYS ADRS3	SYS ADRS1

CK739

	A	B
1	SV A13	SV A14
2	SV A10	SV A12
3	SV A9	SV A11
4	SV A6	SV A8
5	SV A5	SV A7
6	SV A2	SV A4
7	SV A1	SV A3
8	SV D6	SV A0
9	SV D5	SV D7
10	SV D2	SV D4
11	SV D1	SV D3
12	SV RD	SV D0
13	SV R/W	SV WR
14	MY1 CS	SE CS
15	MY0 CS	MD CS
16	SYS WY CS	SE READY
17	MOV ST	MD READY
18	RTC ALARM	MOV RC
19	1HZ INT	MY DT EN
20	SYS READY	
21	MOTOR ACT	SYS HOLD
22	SV P1D EN	
23	DT ALARM	DT DM
24	0	0
25	0	0
26	RF ADRS5	RF ADRS7
27	RF ADRS4	RF ADRS6
28	RF ADRS1	RF ADRS3
29	RF ADRS0	RF ADRS2
30	RF DATA5	RF DATA7
31	RF DATA4	RF DATA6
32	RF DATA1	RF DATA3
33	RF DATA0	RF DATA2
34	RF R/W	RF WR
35	RF DUAL	RF RD
36	BUSY 1	RF SV CS
37	1F ERR RF	RESETO-L
38	0	0
39	0	0
40	RF ADRS11	AV REF
41		0
42		RF ADRS8
43	FAN D	FAN C
44	FAN B	FAN A
45	RF ADRS9	RF ADRS10
46	ENV STUNT B	ENV STUNT D
47	ENV STUNT A	ENV STUNT C
48	0	0
49	ENV CONF I B	ENV CONF I D
50	ENV CONF I A	ENV CONF I C

CK721
(TO PD-4R)

	A	B
1	+14V	0
2		

MY-46

CK713

	B	A
40	0	0
39	MY EN	
38		
37		
36		
35		
34	1HZ INT	RTC ALARM
33		
32	MOV RC	MOV ST
31		
30	MY0 CS	MY1 CS
29	MY DT EN	SV R/W
28	SV WR	SV RD
27	SV D0	SV D1
26	SV D2	SV D3
25	SV D4	SV D5
24	SV D6	SV D7
23	SV A0	SV A1
22	SV A2	SV A3
21	SV A4	SV A5
20	SV A6	SV A7
19	SV A8	SV A9
18	SV A10	SV A11
17	SV A12	SV A13
16	SV A14	
15	AUX 1	AUX 2
14	AUX 3	AUX 4
13		
12	SYS WY CS	SYS R/W
11	SYS WR	SYS RD
10	SYS DATA0	SYS DATA1
9	SYS DATA2	SYS DATA3
8	SYS DATA4	SYS DATA5
7	SYS DATA6	SYS DATA7
6	SYS ADRS0	SYS ADRS1
5	SYS ADRS2	SYS ADRS3
4		
3		
2		
1	+5V	+5V

MB-286

CK714

	A	B
1	0	0
2	+14V	+14V
3	+14V	0
4	+40V	+40V
5	0	0
6	+12V	+12V
7	-12V	-12V
8	-12V SENSE	+12V SENSE
9		
10	+40V 0ED	0
11	0	+5V
12	+5V	0
13	-5V	-5V
14	0	+12V 0ED
15	0	-12V 0ED

CK724
(TO CN-501)

	A	B
1	CP PINCH IH	CP PINCH 0B
2		CP PINCH 0J

MB-285 BOARD (1/3) SIGNAL TABLE

BOARD NO.1-639-151-11

DVR-2000 LA :#100001-
DVR-2000 EO :#100001-
DVR-2100 LA :#100001-
DVR-2100 MO :#100001-
DVR-2100 EO :#100001-

MOTHER BOARD MB-285(2/3) MB-285(2/3) MOTHER BOARD

MB-285 BOARD (2/3)
Mother Board

FOR DVR-2100

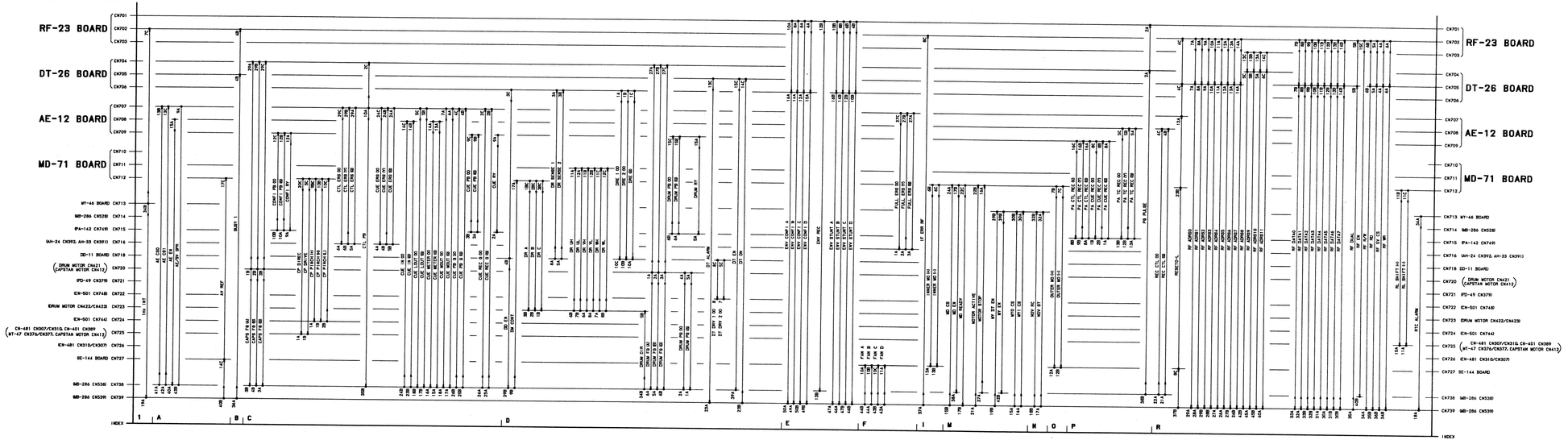

MB-285 BOARD **(2/3)**
WIRING DIAGRAM
BOARD NO. 1-639-151-11

DVR-2100 UJ : #10001-
DVR-2100 UCI : #10001-
DVR-2100 EK3 : #10001-

19-139

MOTHER BOARD MB-285 (2/3) MB-285 (2/3) MOTHER BOARD

MB-285 BOARD (2/3)
Mother Board

FOR DVR-2000

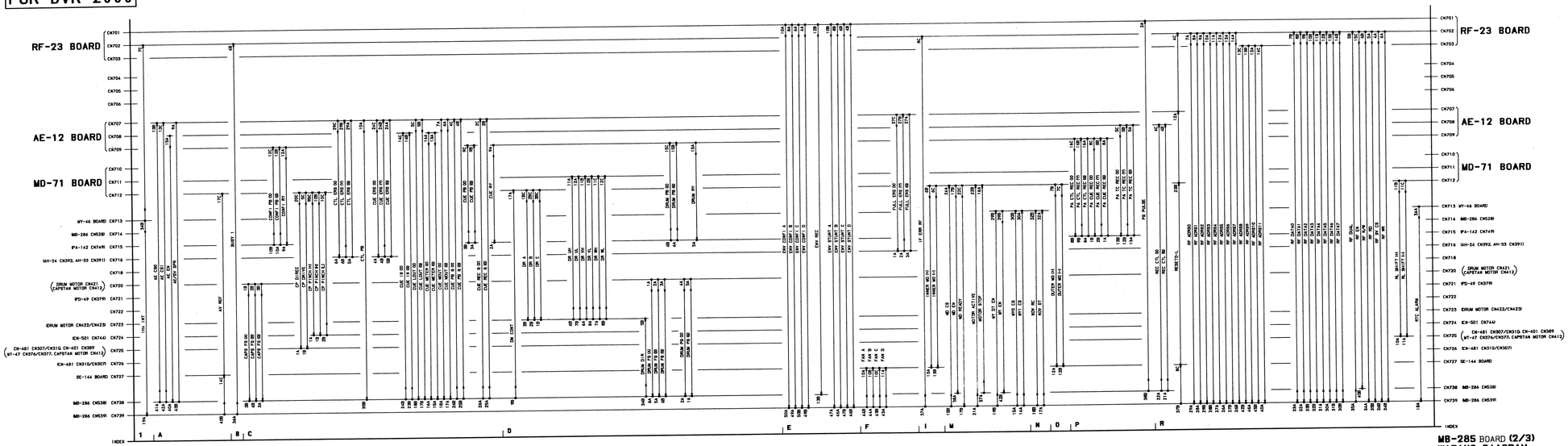

MB-285 BOARD **(2/3)**
WIRING DIAGRAM
BOARD NO. 1-639-151-11
DVR-2000 LJ : #10001-
DVR-2000 EJ : #10001-
DVR-2000 BJ : #10001-

MB-285(3/3) MOTHER BOARD
MOTHER BOARD **MB-285(3/3)**

MB-285 BOARD (3/3)
Mother Board

FOR DVR-2100

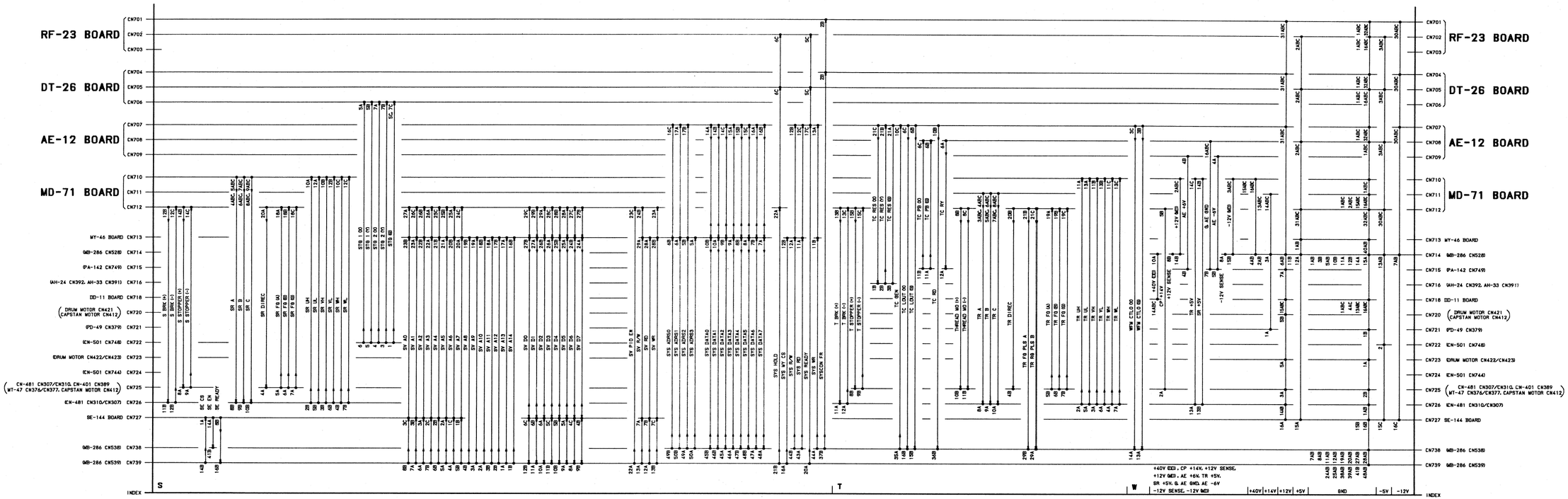

MB-285 BOARD **(3/3)**
WIRING DIAGRAM
BOARD NO. 1-639-151-11
DVR-2100 LB :#10001-
DVR-2100 EC :#10001-
DVR-2100 EX :#10001-

19-141

MOTHER BOARD MB-285 (3/3) MB-285 (3/3) MOTHER BOARD

MB-285 BOARD (3/3)

Mother Board

FOR DVR-2000

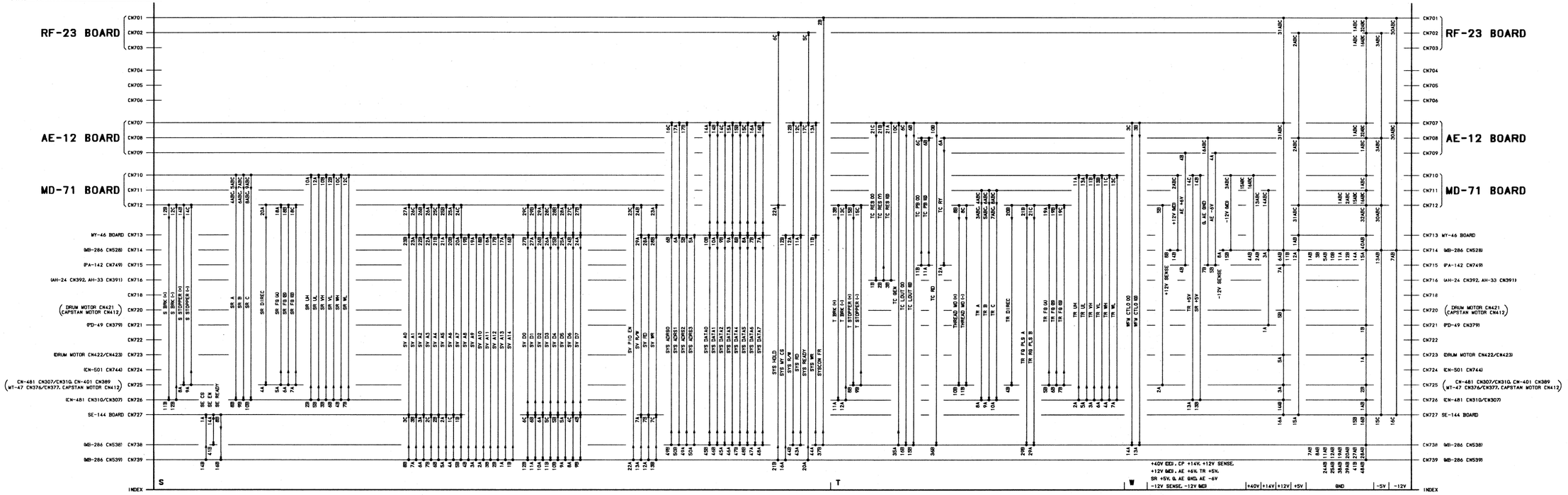

MB-285 BOARD **(3/3)**
WIRING DIAGRAM
BOARD NO. 1-639-151-11
DVR-2000 UJ :#10001-
DVR-2000 (UC) :#10001-
DVR-2000 (EX) :#10001-

19-142

MB-286 BOARD (1/5)

Mother Board

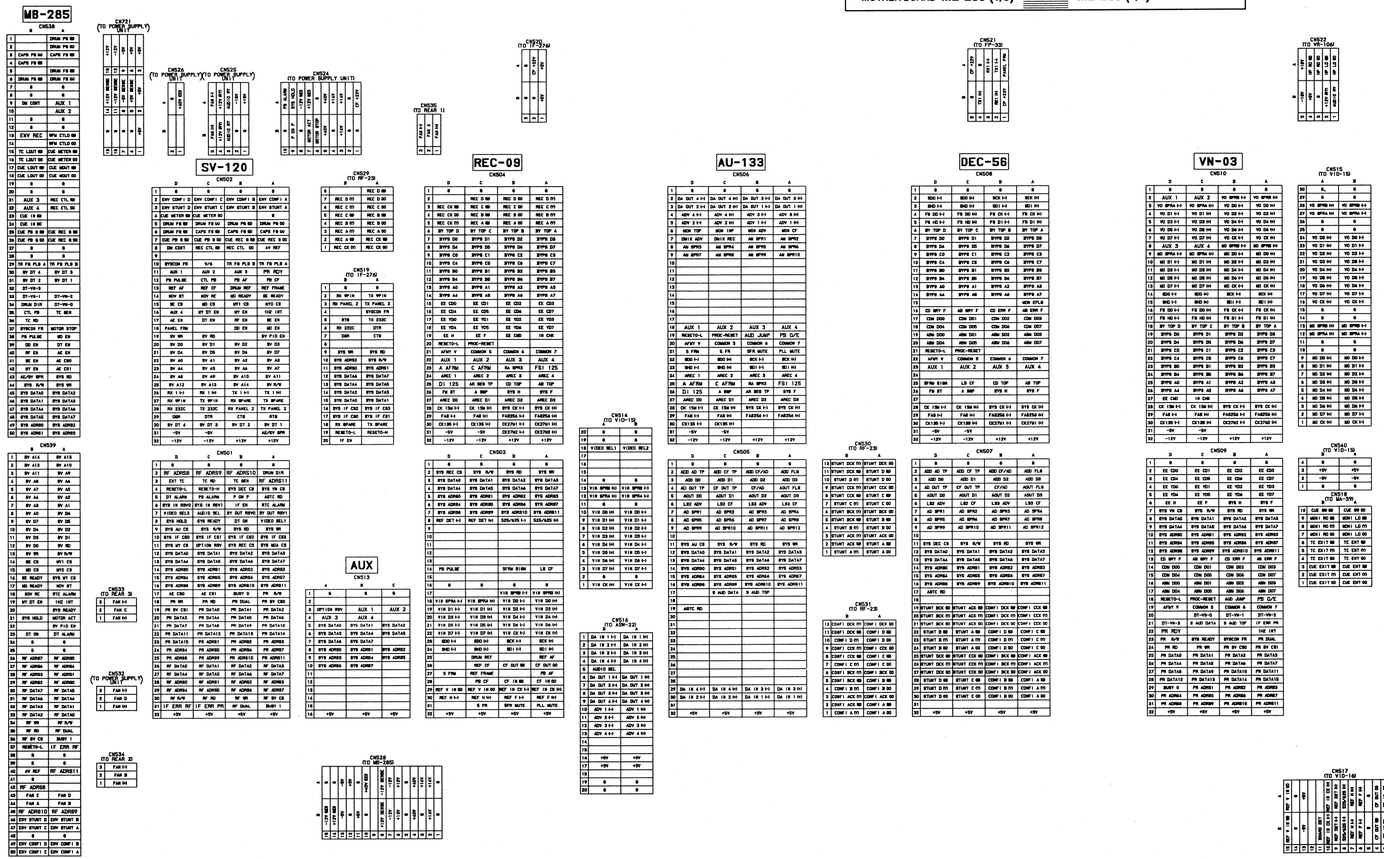

MB-286 BOARD (1/5) SIGNAL TABLE

BOARD NO.1-639-152-11

DVR-2000 LA ≥10000:-
DVR-2000 EX ≥10000:-
DVR-2000 EX2 ≥10000:-
DVR-2100 LA ≥10000:-
DVR-2100 EX2 ≥10000:-
DVR-2100 EX3 ≥10000:-

MOTHER BOARD MB-286 (2/5) MB-286 (2/5) MOTHER BOARD

MB-286 BOARD (2/5)

Mother Board

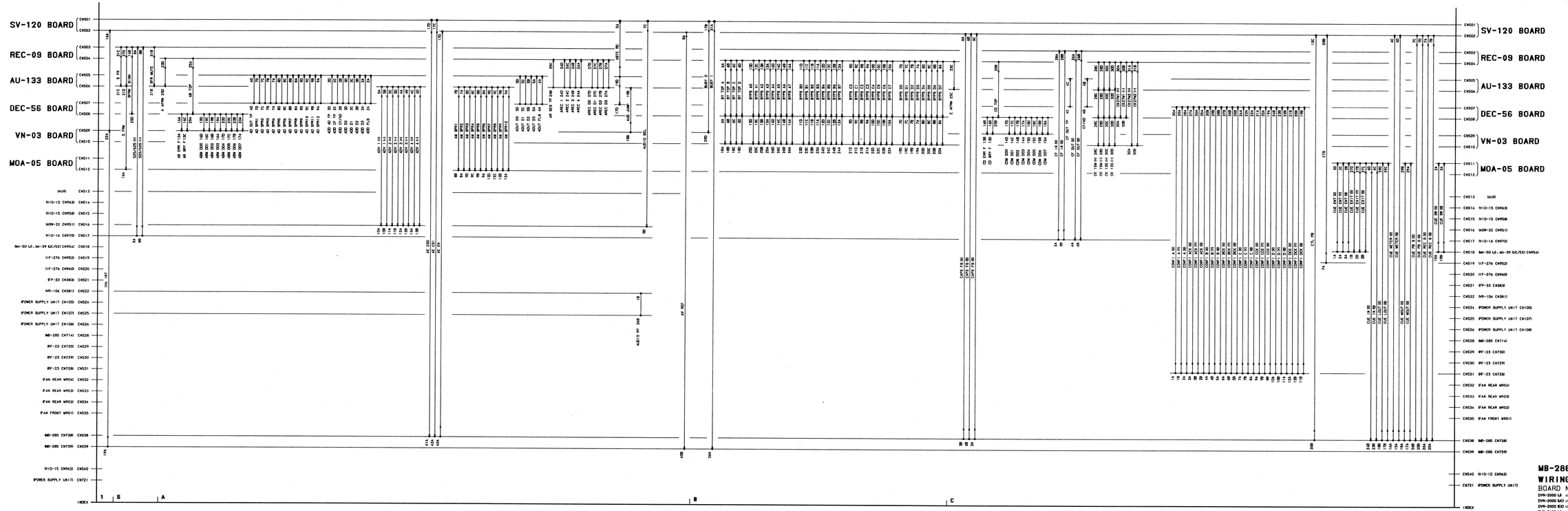

MB-286 BOARD **(2/5)**
WIRING DIAGRAM
BOARD NO. 1-639-152-11

DVR-2000 LB (#10001-
DVR-2000 MC) (#10001-
DVR-2000 EX) (#10001-
DVR-2100 LB (#10001-
DVR-2100 MC) (#10001-
DVR-2100 EX) (#10001-

19-144

MOTHER BOARD **MB-286 (3/5)** **MB-286 (3/5)** MOTHER BOARD

MB-286 BOARD (3/5)
Mother Board

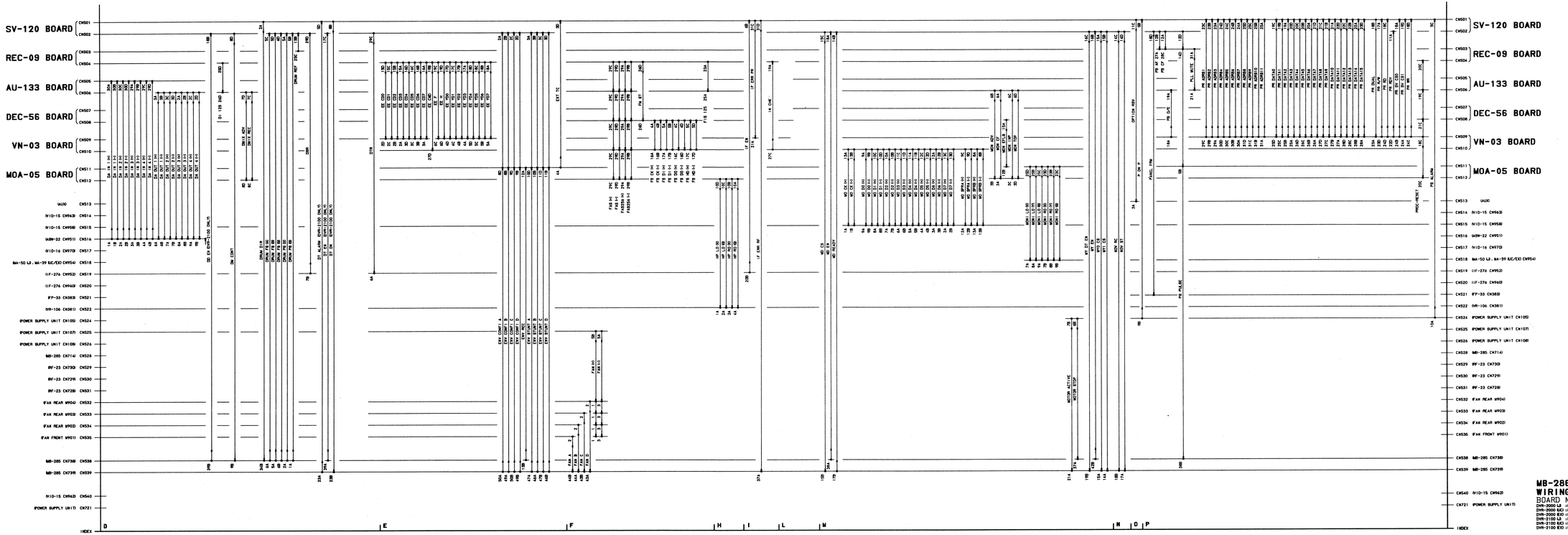

MB-286 BOARD **(3/5)**
WIRING DIAGRAM
BOARD NO. 1-639-152-11
DVR-2000 LJ J810001~
DVR-2000 KJ J810001~
DVR-2000 EJ J810001~
DVR-2100 LJ J810001~
DVR-2100 KJ J810001~
DVR-2100 EJ J810001~

19-145

MOTHER BOARD MB-286 (4/5) MB-286 (4/5) MOTHER BOARD

MB-286 BOARD (4/5)
Mother Board

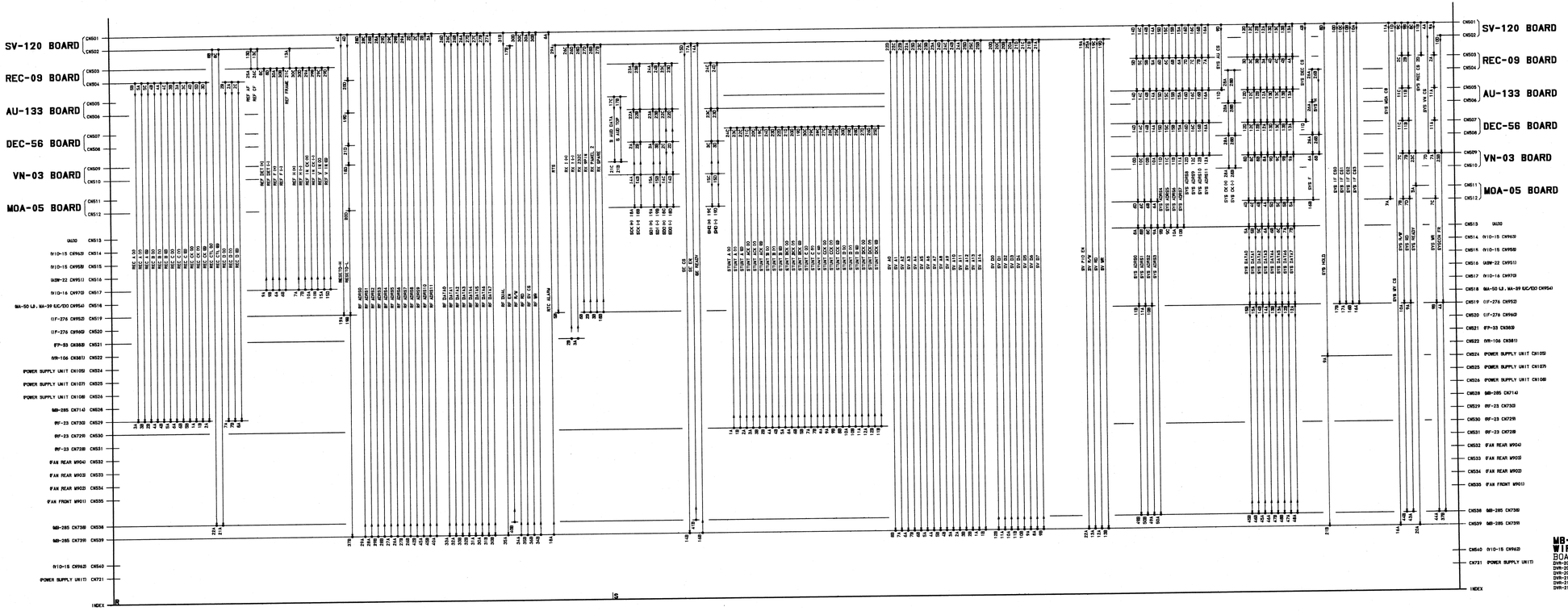

MB-286 BOARD (4/5)
WIRING DIAGRAM
BOARD NO. 1-639-152-11
DVR-2000 LJ #810001~
DVR-2000 EJ #810001~
DVR-2000 EO #810001~
DVR-2100 LJ #810001~
DVR-2100 EJ #810001~
DVR-2100 EO #810001~

19-146

MOTHER BOARD **MB-286 (5/5)**

MB-286 BOARD (5/5)

Mother Board

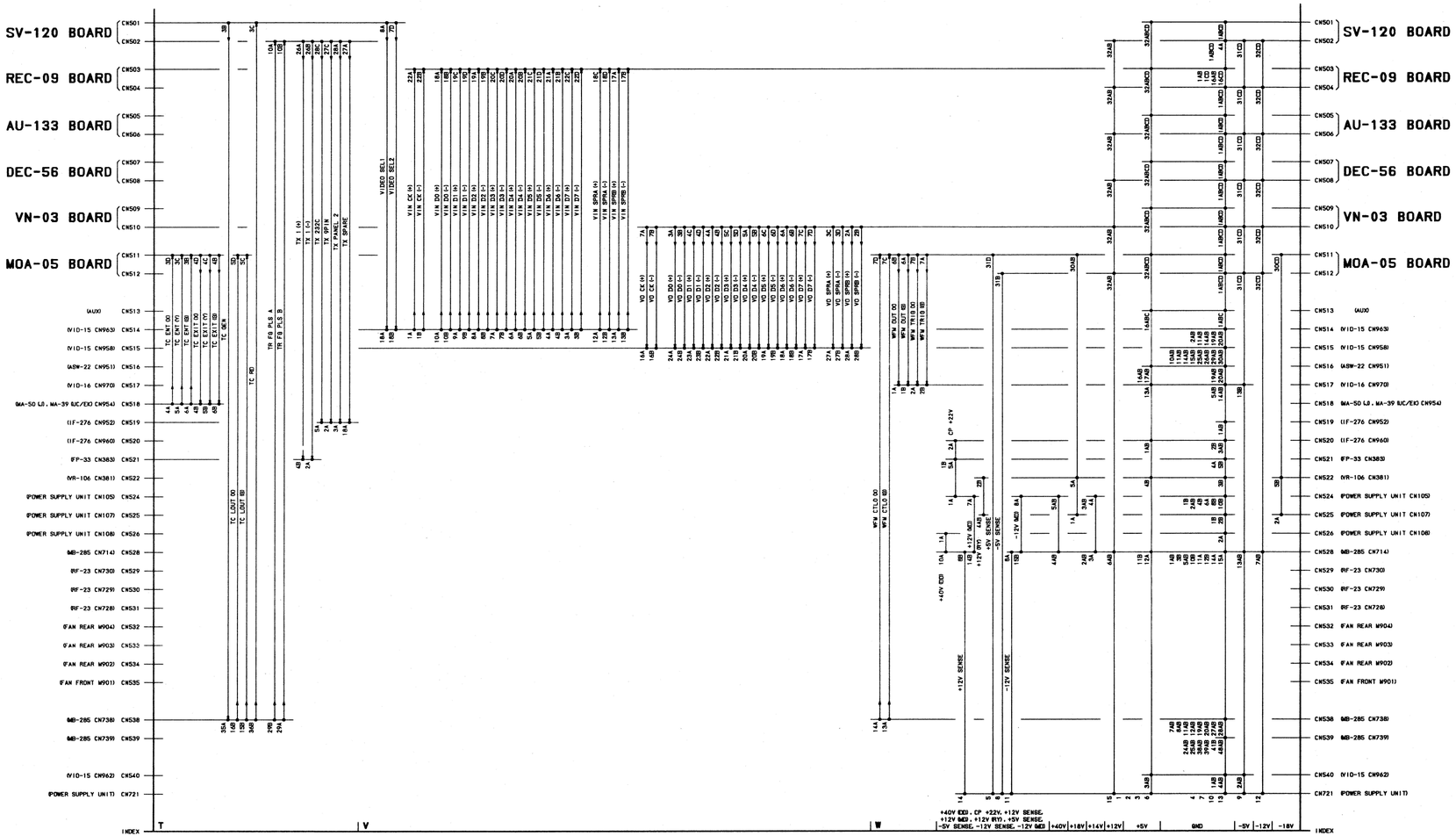

MB-286 BOARD **(5/5)**
WIRING DIAGRAM
BOARD NO. 1-639-152-11

DVR-2000 LB :810001-
DVR-2000 EJC :810001-
DVR-2000 EJD :810001-
DVR-2100 LB :810001-
DVR-2100 EJC :810001-
DVR-2100 EJD :810001-

19-147

MOTHER BOARD **FRAME WIRING (1/6)** **FRAME WIRING (1/6)** MOTHER BOARD

FRAME WIRING (1/6)

Mother Board

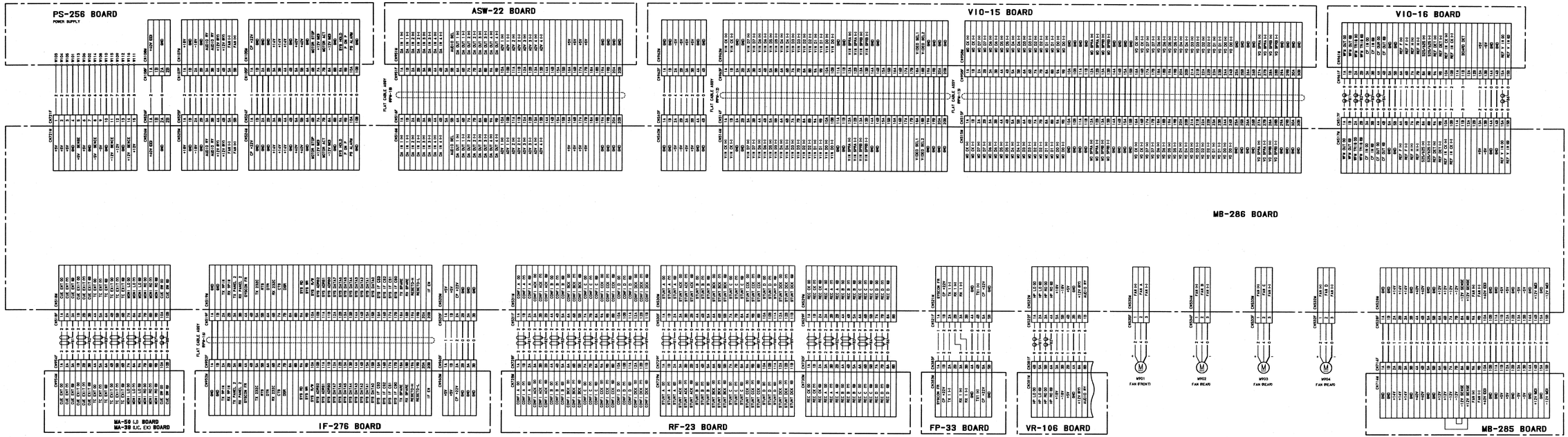

FRAME WIRING (1/6)

MOTHER BOARD

DVR-2000 LJ3 : #10001- DVR-2100 LJ3 : #10001-
DVR-2000 EJC3 : #10001- DVR-2100 EJC3 : #10001-
DVR-2000 EKI : #10001- DVR-2100 EKI : #10001-

19-149

AH-24, AH-33, CN-501 MOTHER BOARD **FRAME WIRING (2/6)** **FRAME WIRING (2/6)** MOTHER BOARD AH-24, AH-33, CN-501

FRAME WIRING (2/6)

MOTHER BOARD
AH-24 BOARD
AH-33 BOARD
CN-501 BOARD

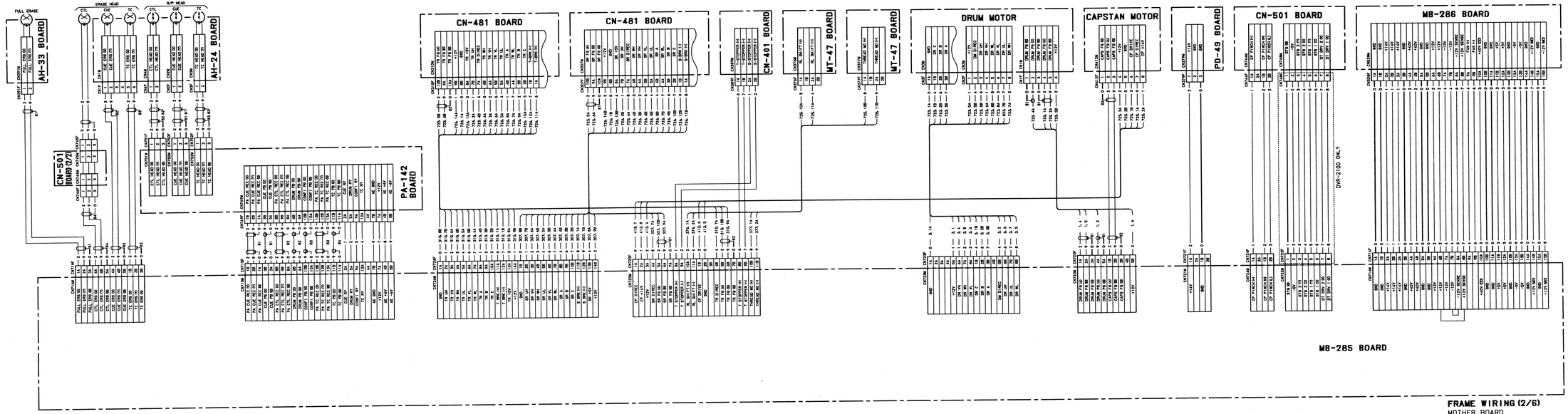

FRAME WIRING (2/6)
MOTHER BOARD
DVR-2000 AJ ±810001~ DVR-2100 AJ ±810001~
DVR-2000 AJC ±810001~ DVR-2100 AJC ±810001~
DVR-2000 EIO ±810001~ DVR-2100 EIO ±810001~

19-150

CN-401, CN-481, CN-501, MT-47, PC-42 TAPE TRANSPORT **FRAME WIRING (3/6)** **FRAME WIRING (3/6)** TAPE TRANSPORT CN-401, CN-481, CN-501, MT-47, PC-42

FRAME WIRING (3/6)

TAPE TRANSPORT CN-501 BOARD
CN-401 BOARD MT-47 BOARD
CN-481 BOARD PC-42 BOARD

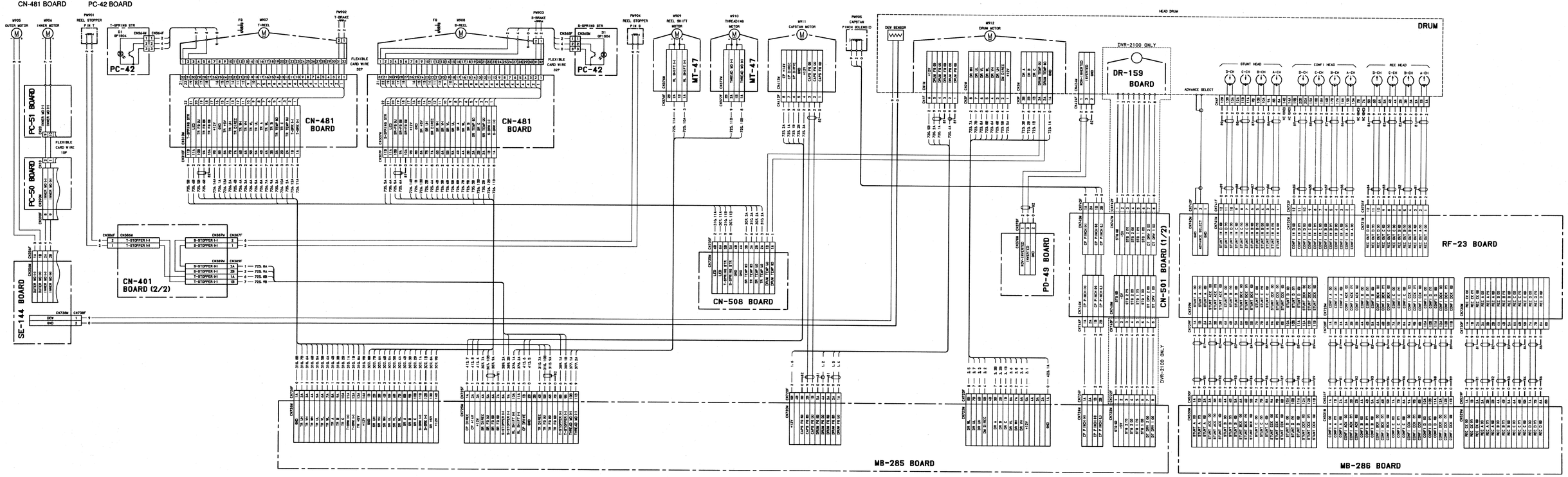

FRAME WIRING (3/6)
TAPE TRANSPORT
DVR-2000 LJ :#10001~ DVR-2100 LJ :#10001~
DVR-2000 KJ :#10001~ DVR-2100 KJ :#10001~
DVR-2000 EX0 :#10001~ DVR-2100 EX0 :#10001~

19-151

FRAME WIRING (4/6) SENSOR CN-401, CN-581, DE-34, DE-38, LE-62, LE-77, PC-42, PC-50, PC-51, PC-52, PC-53, PC-54, PC-55, PC-60, PC-64, TR-43
CN-401, CN-581, DE-34, DE-38, LE-62, LE-77, PC-42, PC-50, PC-51, PC-52, PC-53, PC-54, PC-55, PC-60, PC-64, TR-43 SENSOR FRAME WIRING (4/6)
FRAME WIRING (4/6) SENSOR CN-401, CN-581, DE-34, DE-38, LE-62, LE-77, PC-42, PC-50, PC-51, PC-52, PC-53, PC-54, PC-55, PC-60, PC-64, TR-43

FRAME WIRING (4/6)

SENSOR
- CN-401 BOARD
- CN-581 BOARD
- DE-34 BOARD
- DE-38 BOARD
- LE-62 BOARD
- LE-77 BOARD
- PC-42 BOARD
- PC-50 BOARD
- PC-51 BOARD
- PC-52 BOARD
- PC-53 BOARD
- PC-54 BOARD
- PC-55 BOARD
- PC-60 BOARD
- PC-64 BOARD
- TR-43 BOARD

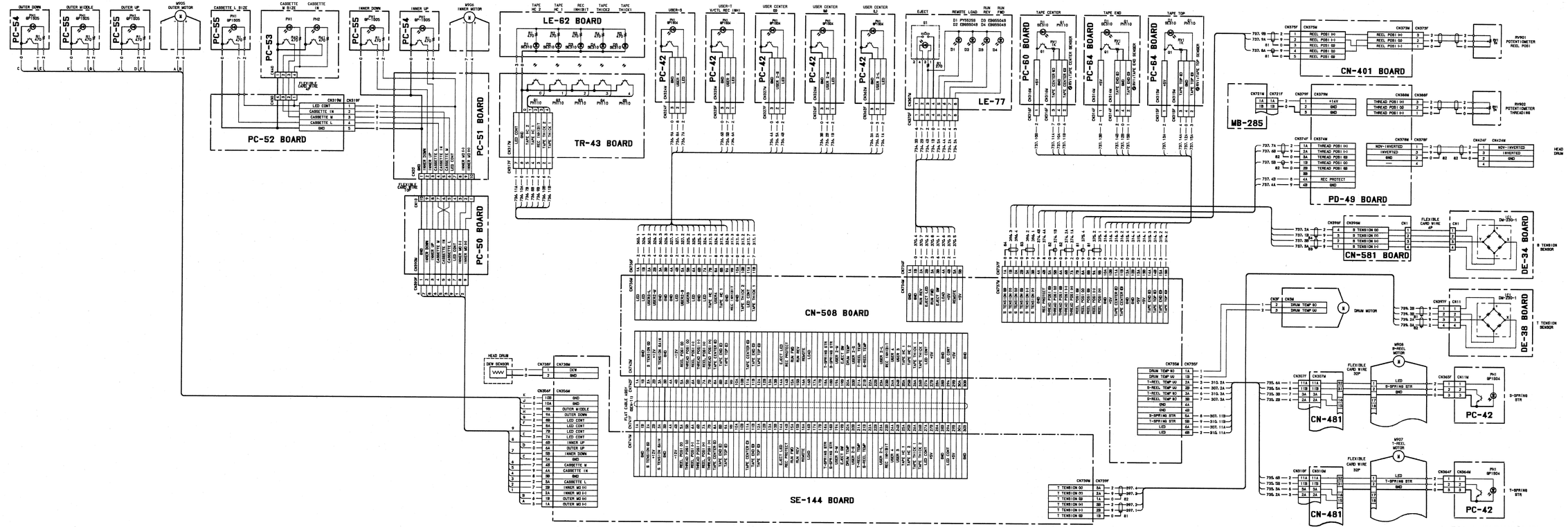

19-152

ASW-21 REAR PANEL **FRAME WIRING (5/6)** **FRAME WIRING (5/6)** REAR PANEL ASW-21

FRAME WIRING (5/6)
REAR PANEL
ASW-21 BOARD

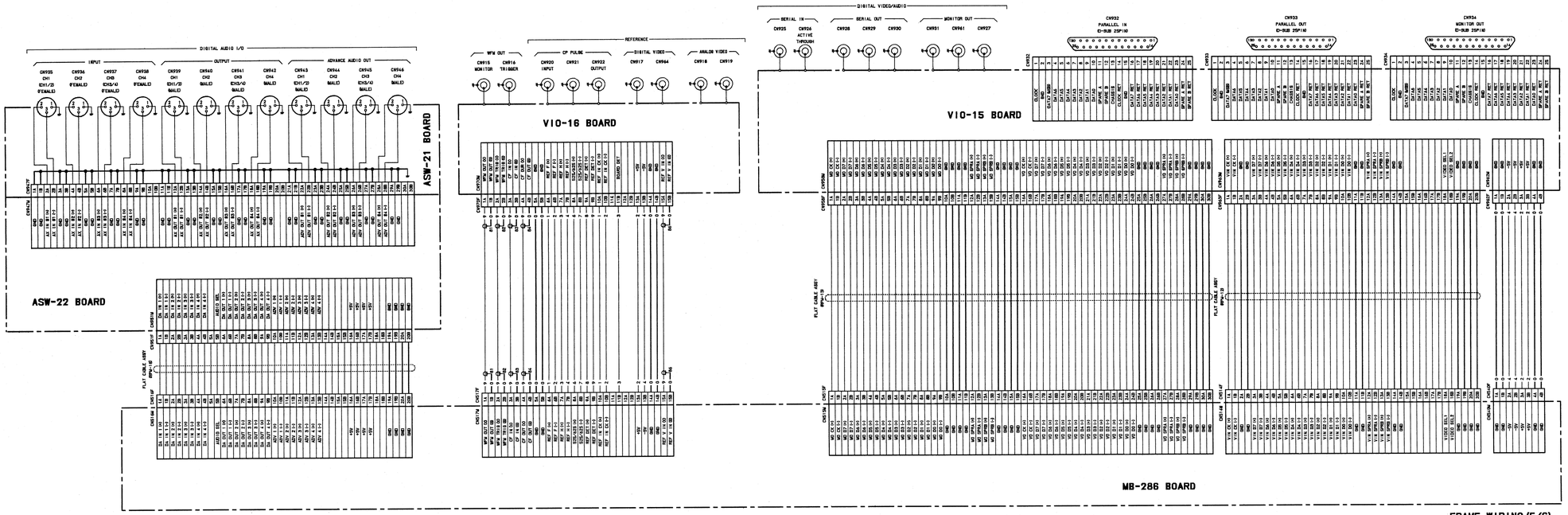

FRAME WIRING (5/6)
REAR PANEL
DVR-2000 LJ ±810001~ DVR-2100 LJ ±810001~
DVR-2000 UJ ±810001~ DVR-2100 UJ ±810001~
DVR-2000 EX ±810001~ DVR-2100 EX ±810001~

19-153

FRAME WIRING (6/6) REAR PANEL CN-512, FP-33, MA-39, MA-50, PE-18, VR-106, VR-107

CN-512, FP-33, MA-39, MA-50, PE-18, VR-106, VR-107 REAR PANEL **FRAME WIRING (6/6)**

FRAME WIRING (6/6) REAR PANEL CN-512, FP-33, MA-39, MA-50, PE-18, VR-106, VR-107

FRAME WIRING (6/6)

REAR PANEL
CN-512 BOARD
FP-33 BOARD
MA-39 BOARD
MA-50 BOARD
PE-18 BOARD
VR-106 BOARD
VR-107 BOARD

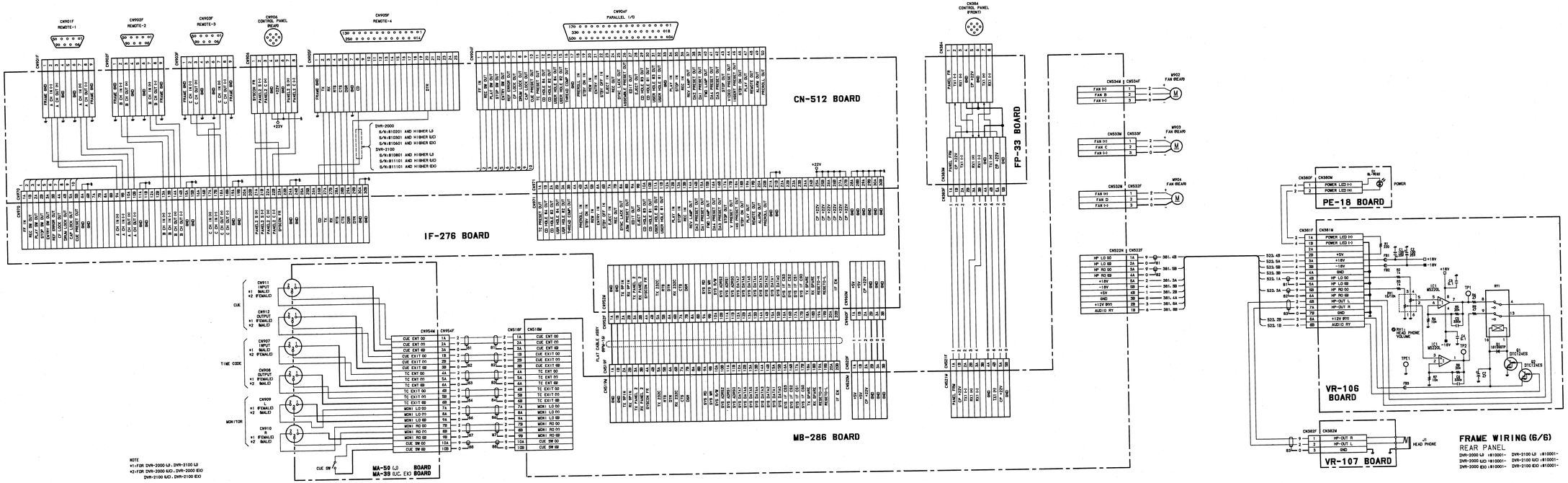

FRAME WIRING (6/6)
REAR PANEL
DVR-2000 LJ :810001- DVR-2100 LJ :810001-
DVR-2000 EJ/CJ :810001- DVR-2100 EJ/CJ :810001-
DVR-2000 EX/ :810001- DVR-2100 EX/ :810001-

19-154

CP-156 FUNCTION CONTROL PANEL (1/3) FUNCTION CONTROL PANEL (1/3) CP-156

FUNCTION CONTROL PANEL (1/3)

CP-156 BOARD

NOTE: DVR-3000/2100

ADDRESS	MARK	CHANGED INFORMATION	SERIAL No.
C3	+1	C3 CHANGED 22/16V → 100/16V	DVR-2000 J :810201- UC:810301- EX:810401- DVR-2100 J :810601- UC:810901- EX:810901-
I3	+2	IC14 CHANGED DS1230Y → BR4011WA-100	DVR-2000 J :810201- UC:810401- EX:810601- DVR-2100 J :810601- UC:811101- EX:811101-
D1 P1	+3	IC7, IC8 CHANGED HM514402ZP-10 → HM514402ZP-8	DVR-2000 J :810401- UC:810901- EX:811201- DVR-2100 J :811101- UC:811201- EX:811201-

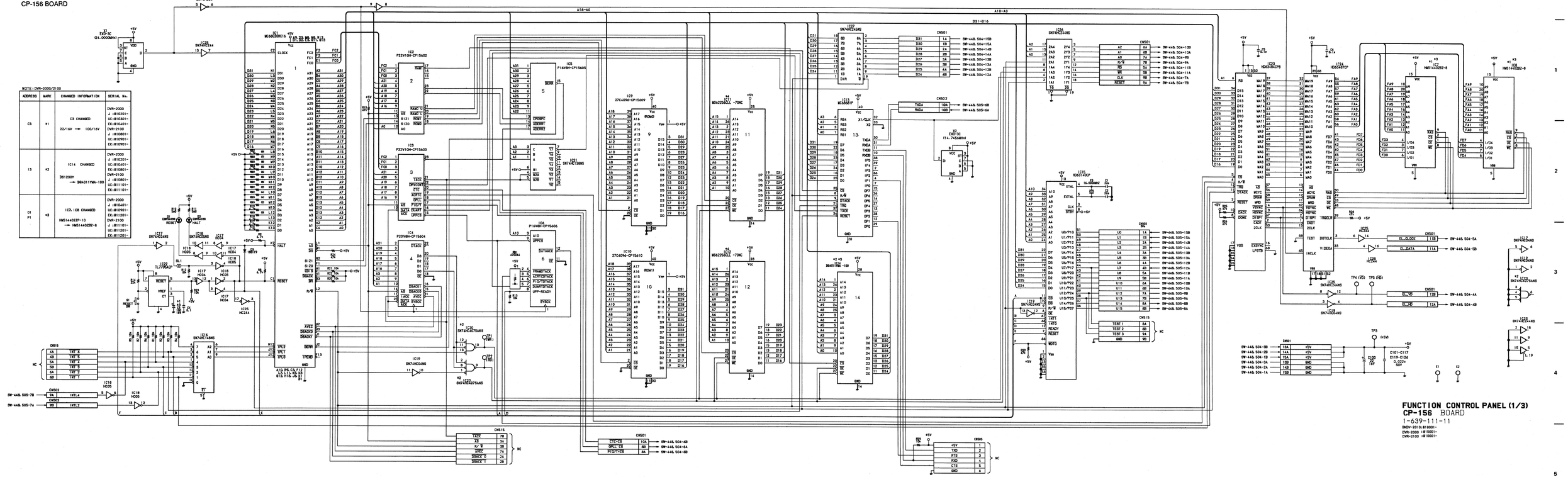

SW-423, SW-448 FUNCTION CONTROL PANEL (2/3) FUNCTION CONTROL PANEL (2/3) SW-423, SW-448

FUNCTION CONTROL PANEL (2/3)

SW-423 BOARD

SW-448 BOARD

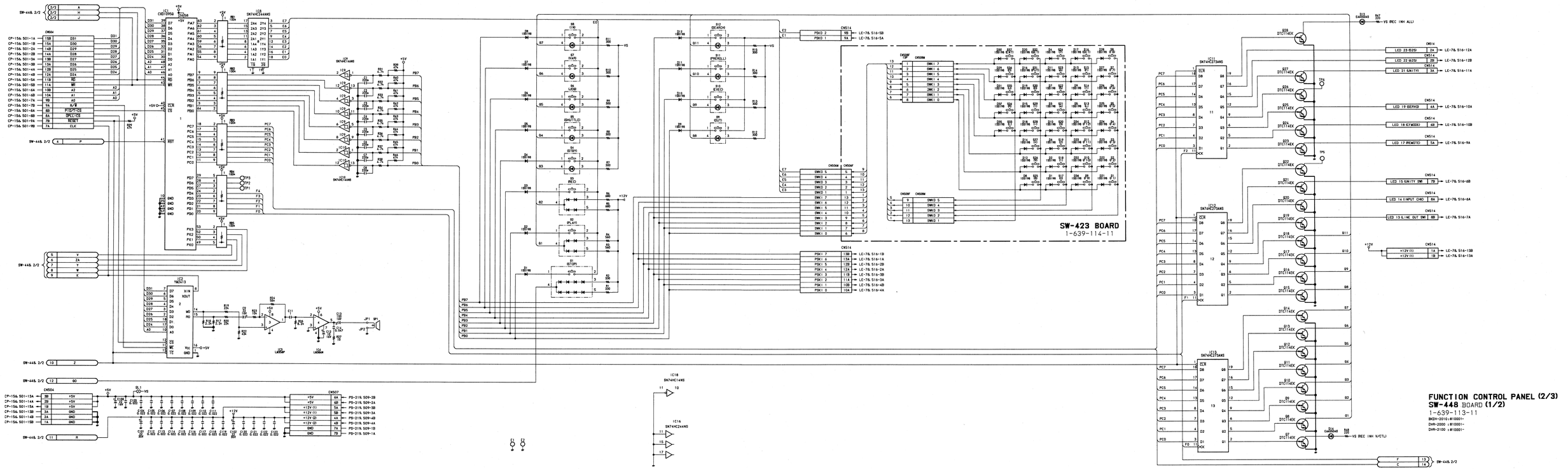

19-156

FUNCTION CONTROL PANEL (3/3) DET-11, LE-78, PS-219, SW-448
DET-11, LE-78, PS-219, SW-448 FUNCTION CONTROL PANEL (3/3)
FUNCTION CONTROL PANEL (3/3) DET-11, LE-78, PS-219, SW-448

FUNCTION CONTROL PANEL (3/3)

DET-11 BOARD PS-219 BOARD
LE-78 BOARD SW-448 BOARD

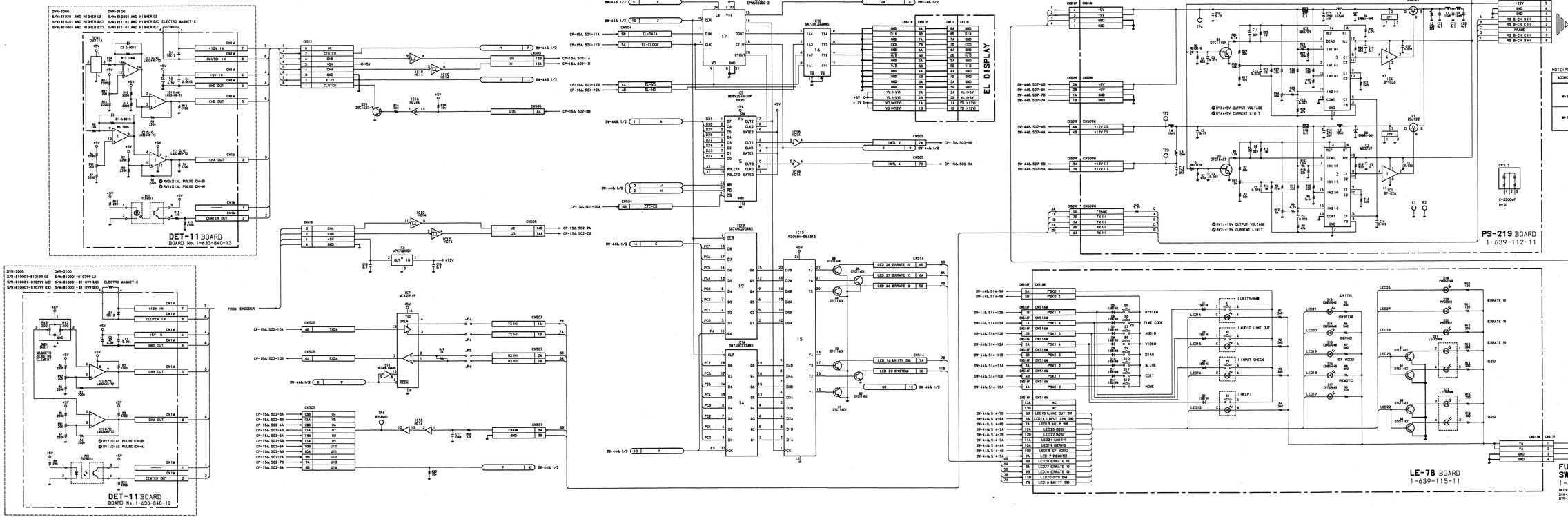

NOTE:PS-219 BOARD			
ADDRESS	MARK	CHANGED INFORMATION	SERIAL No.
W-3	*1	IC1 CHANGED BX-1281 → BP-026	DVR-2000 J :810001- UC:810601- EX:811101-
W-1		IC4 CHANGED BX-1281 → BP-026	DVR-2100 J :811001- UC:811101- EX:811101-

19-157

DVR-2100 ONLY

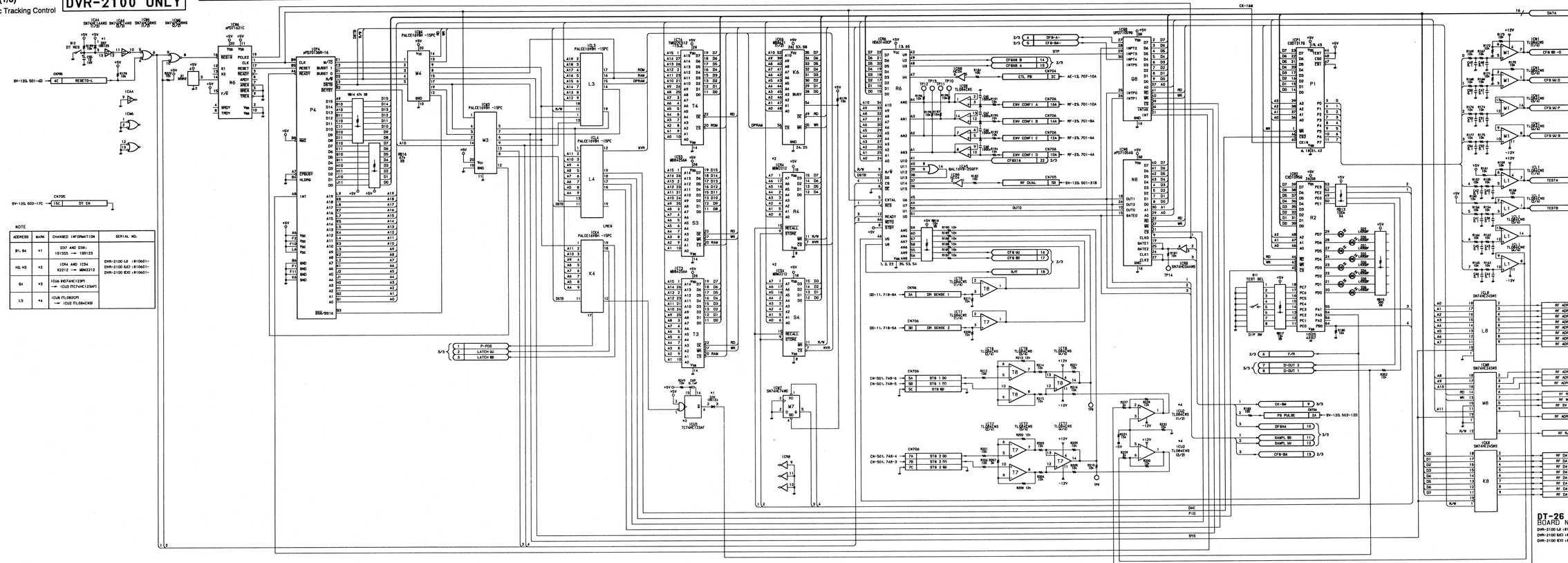

DT-26 BOARD (2/3)

Dynamic Tracking Control

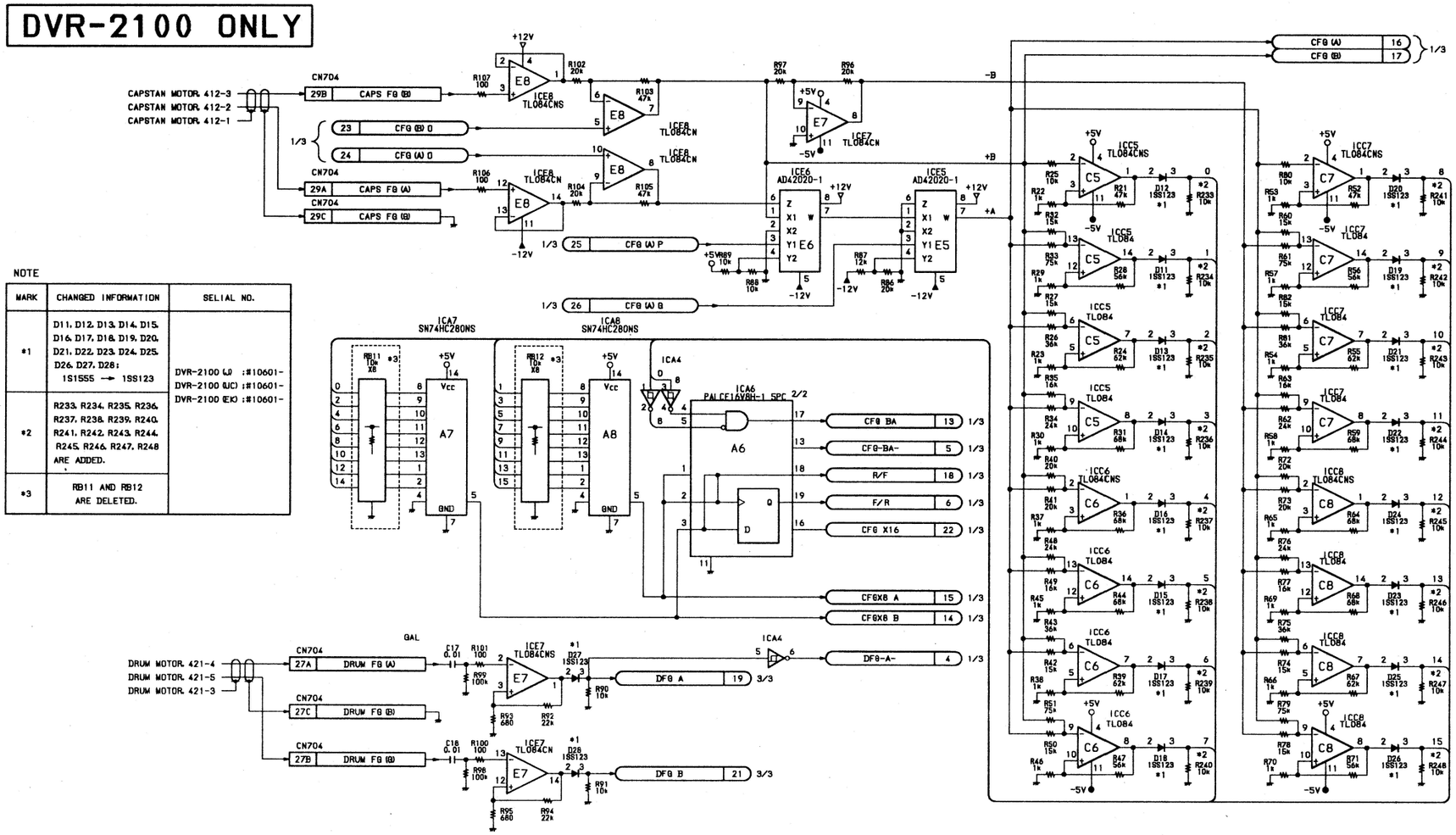

NOTE

MARK	CHANGED INFORMATION	SELIAL NO.
*1	D11, D12, D13, D14, D15, D16, D17, D18, D19, D20, D21, D22, D23, D24, D25, D26, D27, D28: 1S1555 → 1SS123	DVR-2100 (J) :#10601- DVR-2100 (UC) :#10601- DVR-2100 (EK) :#10601-
*2	R233, R234, R235, R236, R237, R238, R239, R240, R241, R242, R243, R244, R245, R246, R247, R248 ARE ADDED.	
*3	RB11 AND RB12 ARE DELETED.	

DT-26 BOARD **(2/3)**
BOARD NO. 1-639-124-11, -12
DVR-2100 (J) :#10001-
DVR-2100 (UC) :#10001-
DVR-2100 (EK) :#10001-

19-159

A B C D E F G H

DT-26 BOARD (2/3)

Dynamic Tracking Control

DVR-2100 ONLY

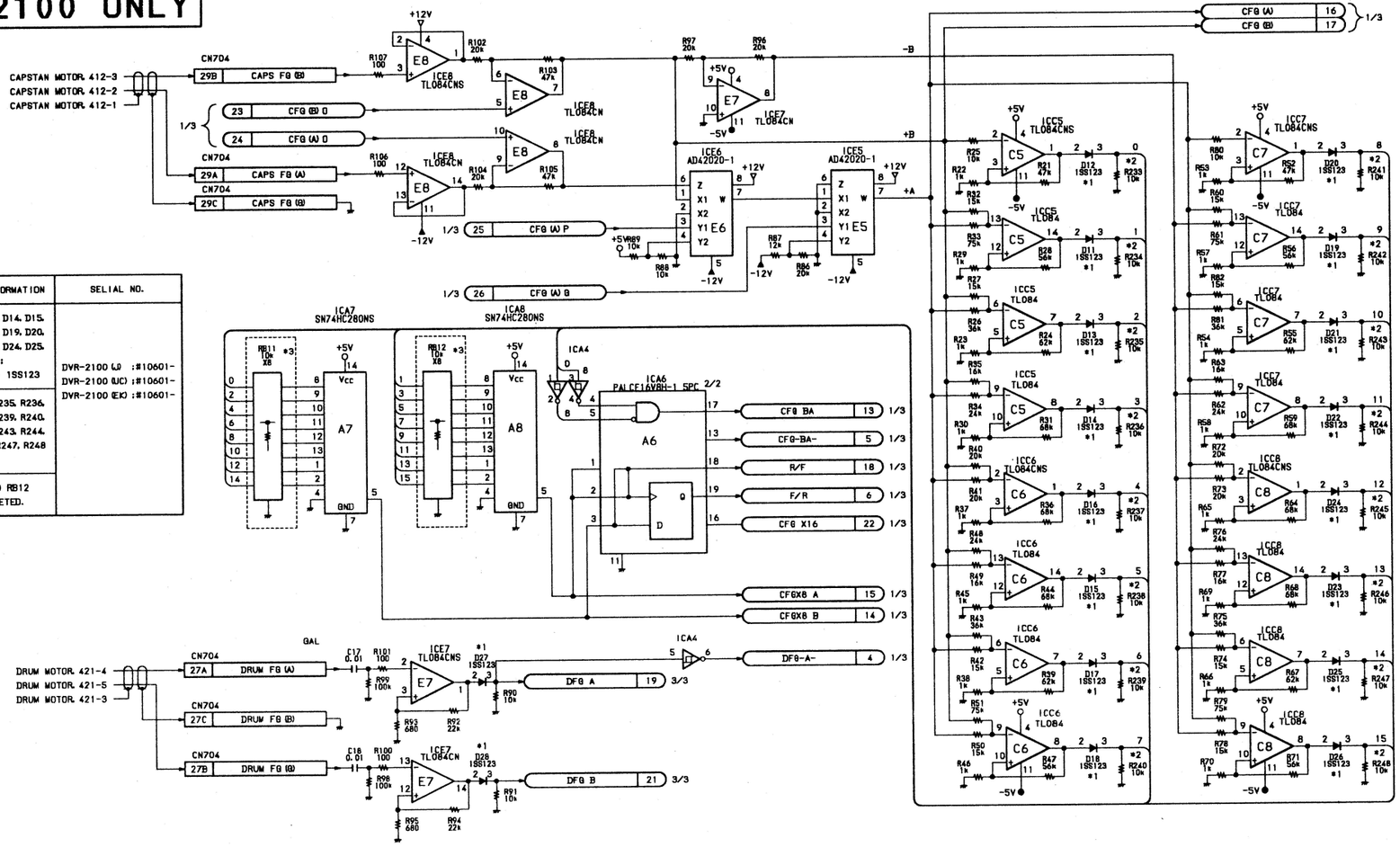

NOTE

MARK	CHANGED INFORMATION	SELIAL NO.
*1	D11, D12, D13, D14, D15, D16, D17, D18, D19, D20, D21, D22, D23, D24, D25, D26, D27, D28: 1S1555 → 1SS123	DVR-2100 (J) :#10601- DVR-2100 (UC) :#10601- DVR-2100 (EK) :#10601-
*2	R233, R234, R235, R236, R237, R238, R239, R240, R241, R242, R243, R244, R245, R246, R247, R248 ARE ADDED.	
*3	RB11 AND RB12 ARE DELETED.	

DT-26 BOARD **(2/3)**
BOARD NO. 1-639-124-11, -12

DVR-2100 (J) :#10001-
DVR-2100 (UC) :#10001-
DVR-2100 (EK) :#10001-

19-159

DT-26 BOARD (3/3)

Dynamic Tracking Control

DVR-2100 ONLY

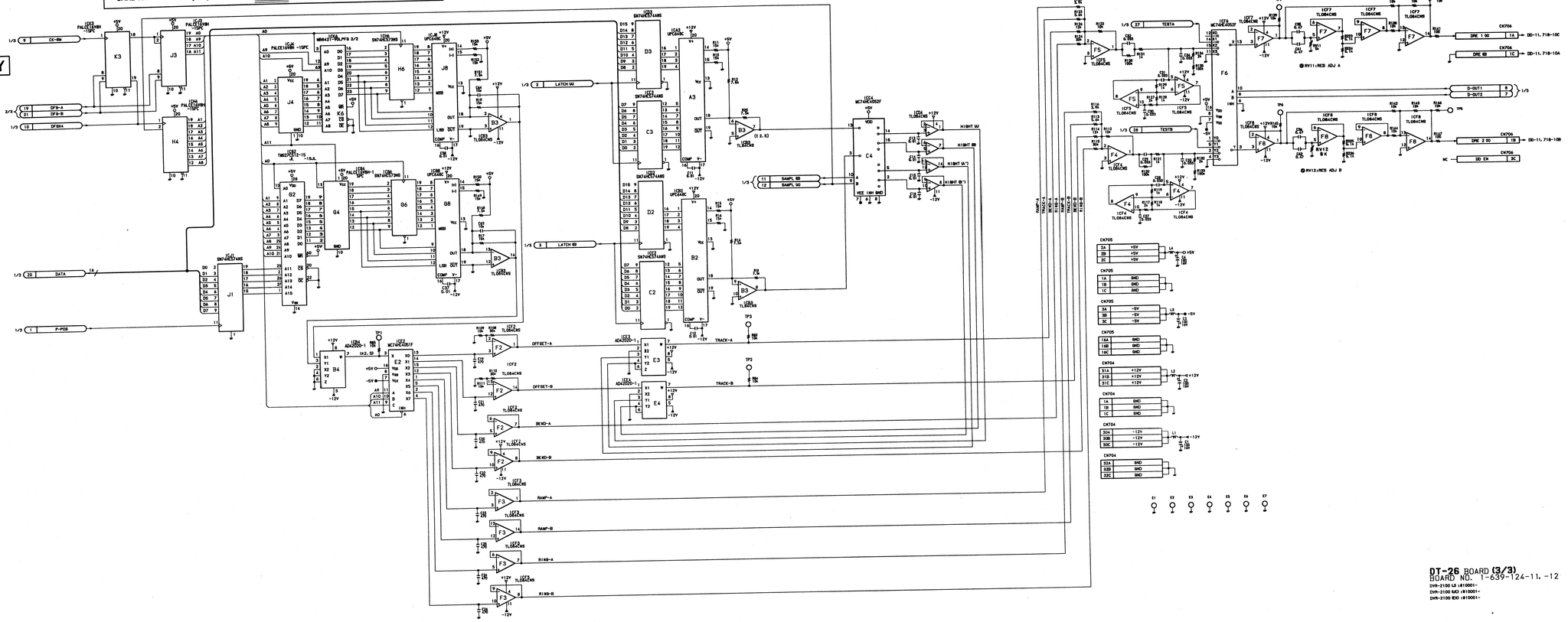

DT-26 BOARD (3/3)
BOARD NO. 1-639-124-11, -12

DVR-2100 LJ (810001-
DVR-2100 MJ (810001-
DVR-2100 BJ (810001-

DD-11 BOARD

DT Driver

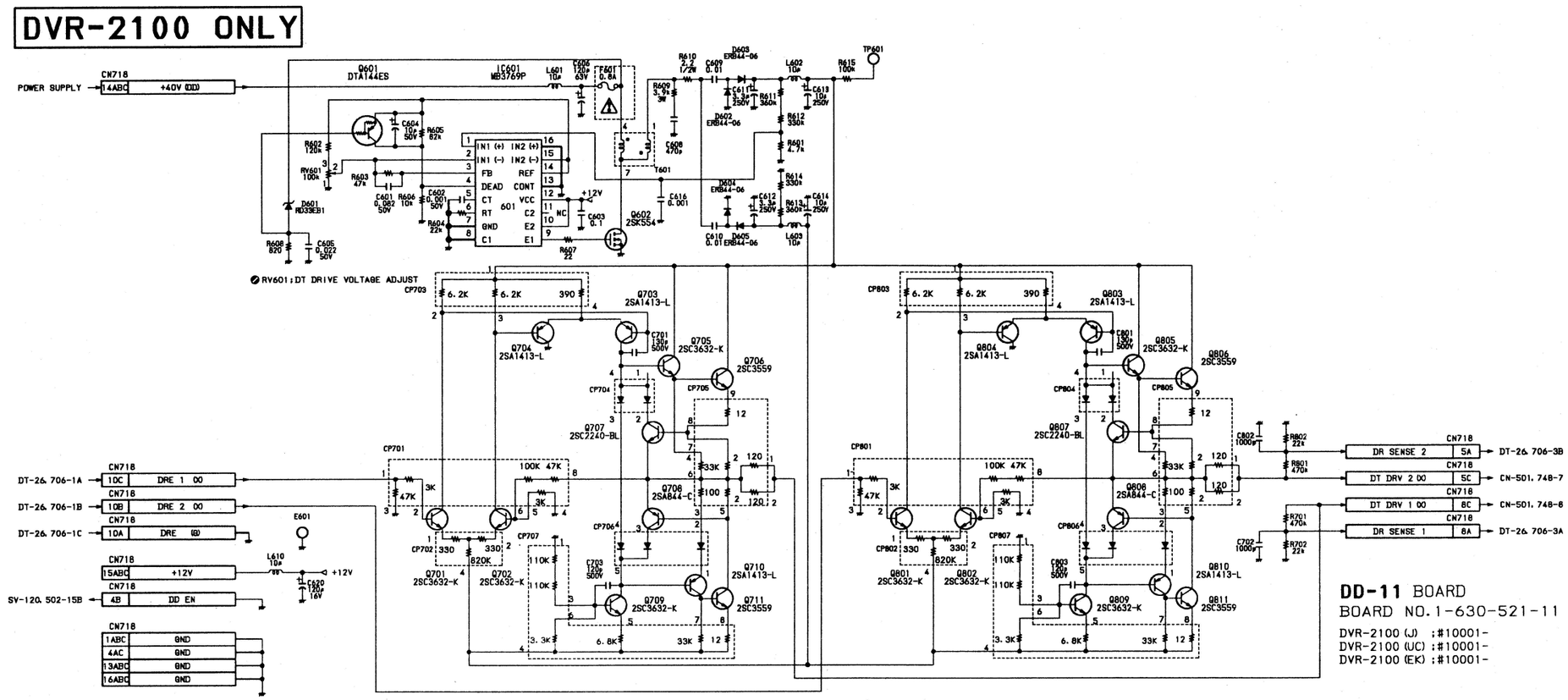

SECTION 20
BOARD LAYOUT

	Board Name	Function	Page
A	AE-12 Board :	Longitudinal Processor	20-14
	AH-24 Board :	Longitudinal R/P Head	20-36
	AH-33 Board :	Full Erase Head	20-36
	ASW-21 Board :	Digital Audio I/O Connector	20-36
	ASW-22 Board :	Digital Audio I/O Selector	20-27
	AU-133 Board :	Audio Signal Processor	20-12
C	CN-401 Board :	Reel Position Sensor Relaying	20-37
	CN-481 Board :	Reel Motor Relaying	20-37
	CN-501 Board :	Drum CTL Relaying	20-37
	CN-508 Board :	SE-144 Board Relaying	20-21
	CN-512 Board :	50P I/O, RS-232C, RS-422	20-37
	CN-581 Board :	S-Tension Sensor Relaying	20-37
	CP-156 Board :	Control Panel CPU	20-43
	CT-133 Board :	Regulator Controller	20-29
D	DD-11 Board :	DT Driver (DVR-2100 ONLY)	20-46
	DE-34 Board :	S-Tension Sensor (DME)	20-37
	DE-38 Board :	T-Tension Sensor (DME)	20-37
	DEC-56 Board :	PB Signal Processor	20-8
	DET-11 Board :	Rotary Encoder	20-40
	DRUM Board :	LED/PRT/P.R.T. TRANSLATION	20-3
	DR-142 Board :	DRIVE AMP FOR STRAIN GAUGE	20-3
	DR-172 Board :	RT STATOR ASSY	20-3
	DT-26 Board :	Dynamic Tracking Control (DVR-2100 ONLY)	20-44
F	FP-33 Board :	Control Panel Cable Connector	20-37
	FU-53 Board :	Fuse Board	20-29
I	IF-276 Board :	System Control I/O	20-26
L	LE-62 Board :	Sensor, TAPE THICK/HC/REC INHIBIT	20-38
	LE-77 Board :	LED Indicator (Front Panel)	20-38
	LE-78 Board :	LED Indicator (Function Control Panel)	20-40
M	MA-39 Board :	CUE/TC/MONITOR I/O Connector	20-38
	MA-50 Board :	CUE/TC/MONITOR I/O Connector	20-38
	MB-285 Board :	TTP Mother	20-32
	MB-286 Board :	Processor Mother	20-34
	MD-71 Board :	Motor Driver	20-22
	MOA-05 Board :	Audio/Monitor Amp	20-16
	MT-47 Board :	Motor Relaying (Reel Shift/Threading)	20-38
	MY-46 Board :	NOV-RAM/Timer	20-24
P	PA-142 Board :	CUE/TC/CTL Head Amp	20-38
	PC-42 Board :	Sensor, T,S-Spring STR/USER Hole	20-38
	PC-50 Board :	Inner Motor/Cassette Sensor Relaying	20-38
	PC-51 Board :	Inner Motor/Cassette Sensor Relaying	20-38
	PC-52 Board :	Inner Motor/Cassette Sensor Relaying	20-39
	PC-53 Board :	Sensor, Cassette In/M Size	20-39
	PC-54 Board :	Sensor, Inner Up/Outer Down	20-39
	PC-55 Board :	Sensor, Cassette Compartment	20-39
	PC-60 Board :	Sensor, Tape Center	20-39
	PC-64 Board :	Sensor, Tape Top/End	20-39
	PD-49 Board :	Power Rotary Transformer Driver	20-28
	PE-18 Board :	Power LED	20-39
	PS-219 Board :	Control Panel Power Supply	20-40
	PS-256 Board :	Power Supply	20-30
R	RE-52 Board :	Switching Regurator	20-29
	REC-09 Board :	REC Signal Processor	20-6
	RF-23 Board :	RF REC/PB Processor	20-4
S	SE-144 Board :	Sensor-1	20-20
	SV-120 Board :	Servo/System Control	20-18
	SW-423 Board :	Rubber Key	20-41
	SW-448 Board :	TTP Function Key	20-42
T	TR-43 Board :	Sensor, TAPE THICK/HC/REC INHIBIT	20-39
	TR-83 Board :	Envelope Select	20-18
V	VIO-15 Board :	Digital Video I/O	20-25
	VIO-16 Board :	Reference Video I/O	20-25
	VN-03 Board :	PB Signal Processor	20-10
	VR-106 Board :	Headphones Monitor Amp	20-39
	VR-107 Board :	Headphones Jack	20-39

20-1

HEAD DRUM DR-142, DR-172, P.R.T, LED, P.R.T. TRANSLATION

DR-142, DR-172, P.R.T, LED, P.R.T. TRANSLATION **HEAD DRUM**

HEAD DRUM DR-142, DR-172, P.R.T, LED, P.R.T. TRANSLATION

DR-142 BOARD (1-639-712-11, 12)

DVR-2100 ONLY

COMPONENT Side

1-636-712-11, 12 COMPONENT SIDE

DR-172 BOARD (1-639-739-11)

COMPONENT Side

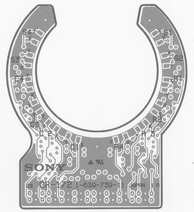

1-639-739-11 COMPONENT SIDE

LED BOARD (1-621-350-12)

COMPONENT Side

1-621-350-12
SOLDER SIDE

P.R.T TRANSLATION BOARD (1-621-459-11)

COMPONENT Side

1-621-459-11
SOLDER SIDE

P.R.T BOARD (1-621-458-14)

COMPONENT Side

1-621-458-14 COMPONENT SIDE

SOLDER Side

1-621-458-14 SOLDER SIDE

RF-23 BOARD (1-639-125-14, 15)

DVR-2000	DVR-2100
J : S/N 10001 and higher	J : S/N 10001 and higher
UC : S/N 10001 and higher	UC : S/N 10001 and higher
EK : S/N 10001 and higher	EK : S/N 10001 and higher

A Side

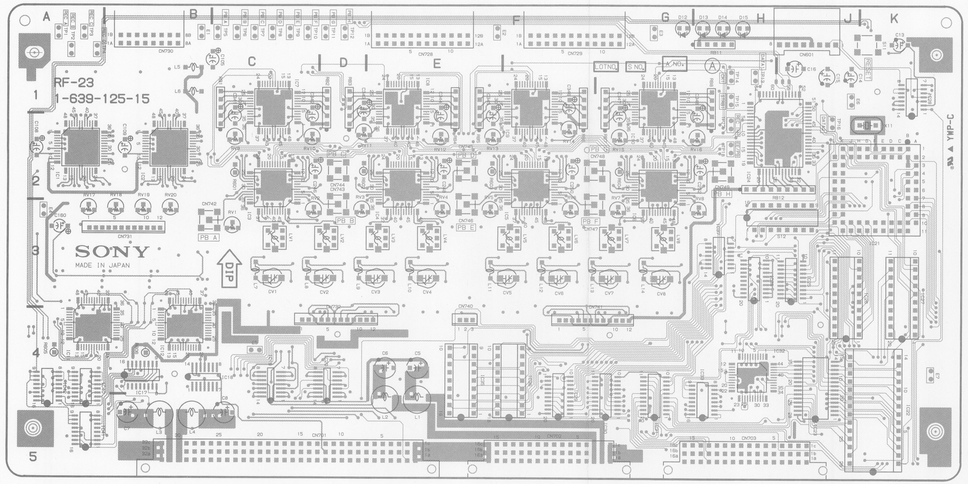

RF-23 BOARD (1-639-125-13)

DVR-2000	DVR-2100
UC ; S/N 10301 through 10599	J ; S/N 10801 through 10899 and higher
EK ; S/N 10601 through 10999	

A Side

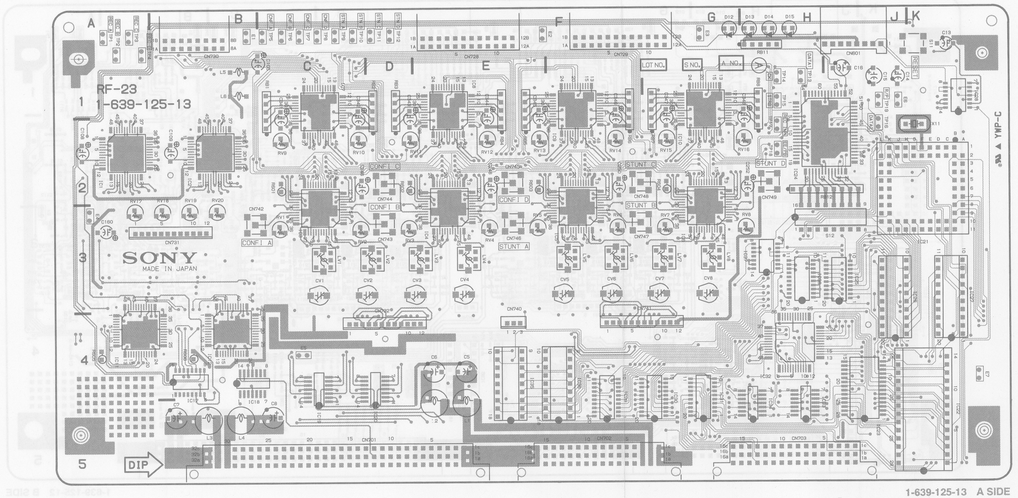

1-639-125-13 A SIDE

B Side

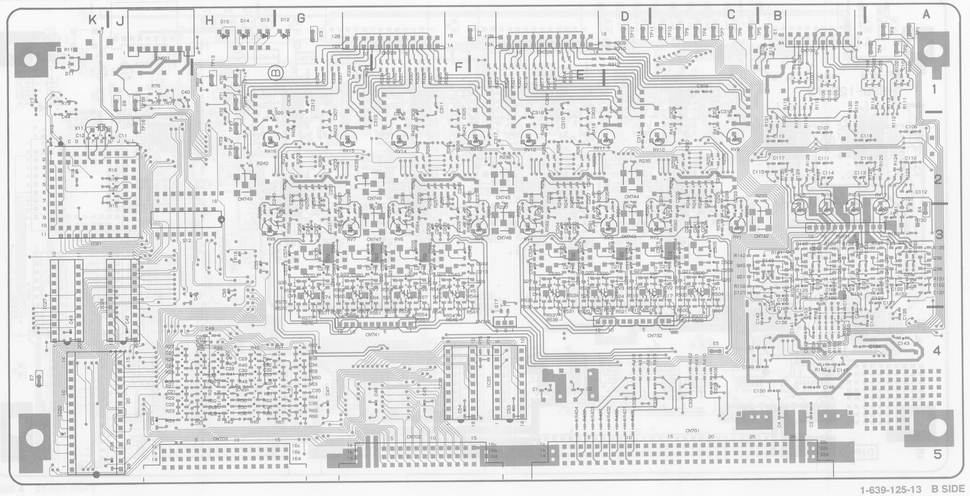

1-639-125-13 B SIDE

RF-23 (1-639-125-13)

DVR-2000
DVR-2100

CN601	J1	IC17	B4	Q34	*G3	RV18	B3		
CN701	C5	IC18	B4	Q35	*G3	RV19	B3		
CN702	F5	IC19	C5	Q36	*A3	RV20	B3		
CN703	H5	IC20	D5	Q37	*A3				
CN728	E1	IC21	K3	Q38	*A3	S11	K1		
CN729	F1	IC22	K5	Q39	*A3	S12	J3		
CN730	B1	IC23	J5	Q40	*A3				
CN731	B3	IC24	H2	Q41	*B3	TP1	A1		
CN732	D4	IC25	J3	Q42	*A3	TP2	A1		
CN740	E4	IC26	K3	Q43	*B3	TP3	A1		
CN741	F4	IC27	K3	Q44	*B3	TP4	A1		
CN742	B3	IC28	K1	Q45	*B3	TP5	C1		
CN743	D3	IC29	F5	Q46	*B3	TP6	C1		
CN744	D2	IC30	G5	Q47	*B3	TP7	C1		
CN745	E2	IC31	G5	Q48	*B3	TP8	C1		
CN746	E3	IC32	H4	Q49	*C3	TP9	C1		
CN747	F3	IC33	H5	Q50	*B3	TP10	C1		
CN748	F2	IC34	H5	Q51	*C3	TP11	D1		
CN749	H2	IC35	E4			TP12	D1		
		IC36	F4	RB1	C1	TP13	H1		
D11	*K1	IC37	H3	RB2	D1	TP14	H1		
D12	G1	IC38	H3	RB3	D1	TP15	H1		
D13	H1			RB4	E2	TP16	J2		
D14	H1	LV1	C3	RB5	E2	TP17	H2		
D15	H1	LV2	D3	RB6	F2	TP18	H2		
D101	*A2	LV3	E3	RB7	G2	TP19	J1		
		LV4	E3	RB8	H1				
E1	B1	LV5	F3	RB11	H1	X11	K2		
E2	E1	LV6	F3	RB12	H2				
E3	G1	LV7	G3						
E4	A3	LV8	G3	RV1	C3				
E5	C4			RV2	C3				
E6	J1	Q17	*E3	RV3	D3				
E7	K4	Q20	*C3	RV4	E3				
		Q21	*C3	RV5	E3				
IC1	A2	Q22	*C3	RV6	F3				
IC2	B2	Q23	*D3	RV7	G3				
IC3	C3	Q24	*D3	RV8	H3				
IC4	E3	Q25	*E3	RV9	C2				
IC5	F3	Q26	*E3	RV10	C2				
IC6	G3	Q27	*E3	RV11	D2				
IC7	C1	Q28	*E3	RV12	E2				
IC8	E1	Q29	*F3	RV13	E2				
IC9	F2	Q30	*F3	RV14	F2				
IC10	G2	Q31	*F3	RV15	G2				
IC11	A4	Q32	*F3	RV16	H2				
IC12	B4	Q33	*G3	RV17	A3				

* : B SIDE

CARD RACK **RF-23 BOARD** **RF-23 BOARD** CARD RACK

RF-23 BOARD (1-639-125-12)

DVR-2000	DVR-2100
J ; S/N 10001 through 10199	J ; S/N 10201 through 10799
UC ; S/N 10001 through 10299	UC ; S/N 10201 through 10199
EK ; S/N 10001 through 10599	EK ; S/N 10101 through 11099

A Side

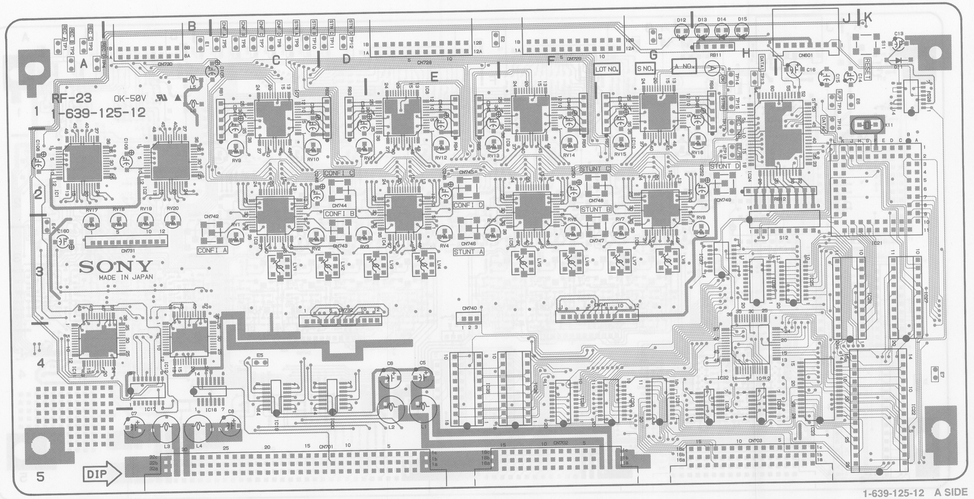

1-639-125-12 A SIDE

RF-23 (1-639-125-11, 12)

DVR-2000
DVR-2100

CNI21	K3	1) IC14	B3	2) Q35	G3	TP3	A1		
CNI22	K5	1) IC15	B3	2) Q36	A3	TP4	A1		
CNI26	K3	1) IC16	C3	2) Q37	A3	TP5	C1		
CNI27	K3	IC17	B4	2) Q38	A3	TP6	C1		
CNI35	E4	IC18	B5	2) Q39	A3	TP7	C1		
CNI36	F4	IC19	C5	2) Q40	A3	TP8	C1		
		IC20	D5	2) Q41	B3	TP9	C1		
CN601	J1	IC21	K3	2) Q42	A3	TP10	C1		
CN701	D5	IC22	K5	2) Q43	B3	TP11	D1		
CN702	F5	IC23	J5	2) Q44	B3	TP12	D1		
CN703	H5	IC24	H2	2) Q45	B3	TP13	H1		
CN728	E1	IC25	J3	2) Q46	B3	TP14	H1		
CN729	F1	IC26	K3	2) Q47	B3	TP15	H1		
CN730	B1	IC27	K3	2) Q48	B3	TP16	J2		
CN731	B3	IC28	K1	2) Q49	C3	TP17	H2		
CN732	D3	IC29	F5	2) Q50	B3	TP18	H2		
CN740	E3	IC30	G4	2) Q51	C3	TP19	J1		
CN741	G3	IC31	G5						
CN742	B2	IC32	H4	RB1	C1	X11	K2		
CN743	D3	IC33	H5	RB2	D1				
CN744	D2	IC34	H5	RB3	D1	＊; B SIDE			
CN745	E2	IC35	E4	RB4	E2	1) FOR SUFFIX-11			
CN746	E3	IC36	F4	RB5	E2	2) FOR SUFFIX-12			
CN747	F3	IC37	H3	RB6	F2				
CN748	F2	IC38	H3	RB7	G2				
CN749	H2			RB8	H1				
		LV1	C3	RB11	H1				
D11	K1	LV2	D3	RB12	J2				
D12	G1	LV3	E3						
D13	H1	LV4	E3	RV1	C3				
D14	H1	LV5	F3	RV2	C3				
D15	H1	LV6	F3	RV3	D3				
2) D101	＊A2	LV7	G3	RV4	E3				
		LV8	G3	RV5	E3				
E1	B1			RV6	F3				
E2	F1	Q1	＊B3	RV7	G3				
E3	G1	Q2	＊A3	RV8	H3				
E4	A3	Q3	＊B3	RV9	C2				
E5	C4	Q4	＊B3	RV10	C2				
E6	J1	Q17	＊E3	RV11	D2				
E7	K4	2) Q20	C3	RV12	E2				
		2) Q21	C3	RV13	E2				
IC1	A2	2) Q22	C3	RV14	F2				
IC2	B2	2) Q23	D3	RV15	G2				
IC3	C3	2) Q24	D3	RV16	H2				
IC4	E3	2) Q25	E3	2) RV17	A2				
IC5	F3	2) Q26	E3	2) RV18	B2				
IC6	G3	2) Q27	E3	2) RV19	B2				
IC7	C1	2) Q28	E3	2) RV20	B2				
IC8	E1	2) Q29	F3						
IC9	F2	2) Q30	F3	S11	K1				
IC10	G2	2) Q31	F3	S12	J3				
IC11	A4	2) Q32	F3						
IC12	B4	2) Q33	G3	TP1	A1				
1) IC13	A3	2) Q34	G3	TP2	A1				

CARD RACK **RF-23 BOARD** | **RF-23 BOARD** CARD RACK

B Side

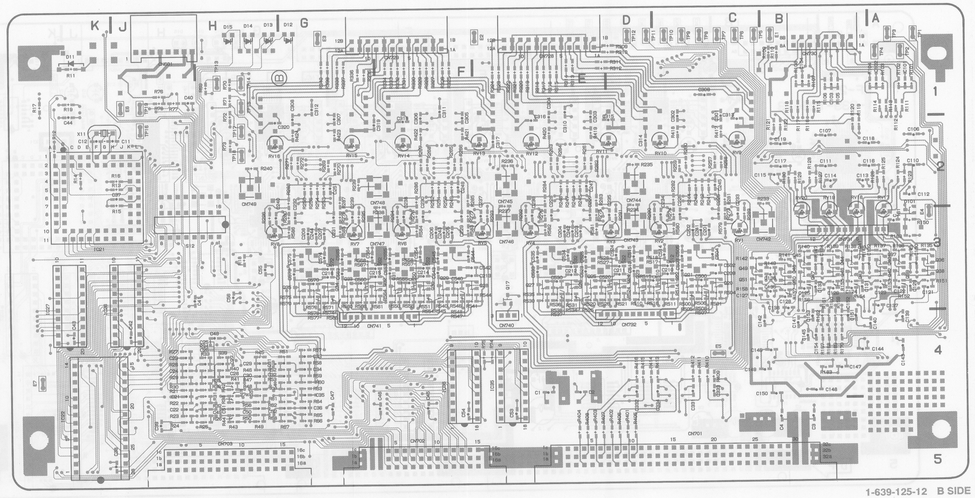

1-639-125-12 B SIDE

RF-23 BOARD (1-639-125-11)

DVR:2100
J : S/N 10001 through 10199
UC : S/N 10001 through 10199
EK : S/N 10001 through 10099

A Side

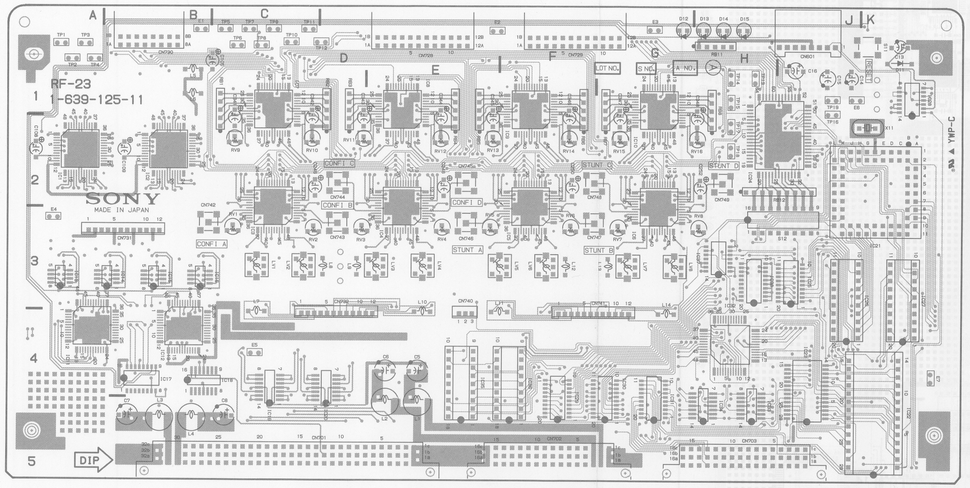

1-639-125-11 A SIDE

B Side

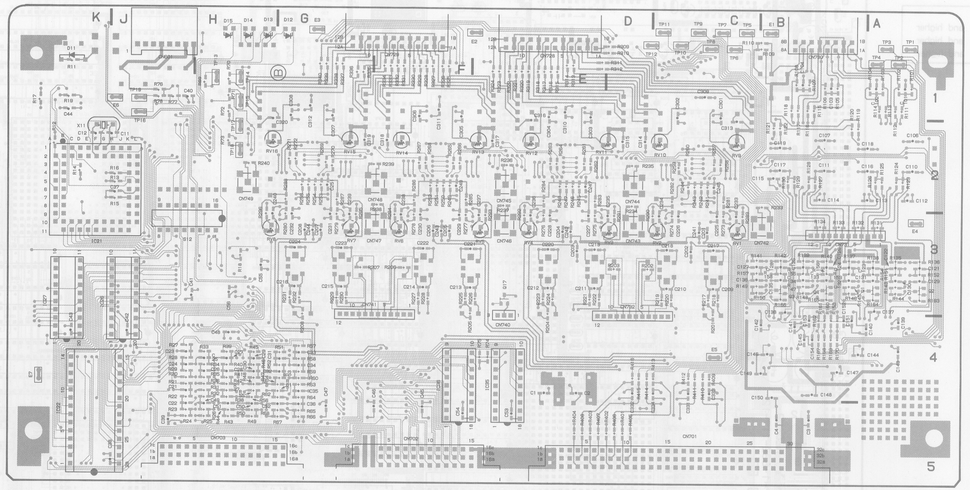

1-639-125-11 B SIDE

CARD RACK **RF-23 BOARD** **RF-23 BOARD** CARD RACK

RF-23 (1-639-125-11, 12)

DVR:2000
DVR:2100

CNI21	K3	1) IC14	B3	2) Q35	G3	TP3	A1
CNI22	K5	1) IC15	B3	2) Q36	A3	TP4	A1
CNI26	K3	1) IC16	C3	2) Q37	A3	TP5	C1
CNI27	K3	IC17	B4	2) Q38	A3	TP6	C1
CNI35	E4	IC18	B5	2) Q39	A3	TP7	C1
CNI36	F4	IC19	C5	2) Q40	A3	TP8	C1
		IC20	D5	2) Q41	B3	TP9	C1
CN601	J1	IC21	K3	2) Q42	A3	TP10	C1
CN701	D5	IC22	K5	2) Q43	B3	TP11	D1
CN702	F5	IC23	J5	2) Q44	B3	TP12	D1
CN703	H5	IC24	H2	2) Q45	B3	TP13	H1
CN728	E1	IC25	J3	2) Q46	B3	TP14	H1
CN729	F1	IC26	K3	2) Q47	B3	TP15	H1
CN730	B1	IC27	K3	2) Q48	B3	TP16	J2
CN731	B3	IC28	K1	2) Q49	C3	TP17	H2
CN732	D3	IC29	F5	2) Q50	B3	TP18	H2
CN740	E3	IC30	G4	2) Q51	C3	TP19	J1
CN741	G3	IC31	G5				
CN742	B2	IC32	H4	RB1	C1	X11	K2
CN743	D3	IC33	H5	RB2	D1		
CN744	D2	IC34	H5	RB3	D1	* : B SIDE	
CN745	E2	IC35	E4	RB4	E2	1) FOR SUFFIX-11	
CN746	E3	IC36	F4	RB5	E2	2) FOR SUFFIX-12	
CN747	F3	IC37	H3	RB6	F2		
CN748	F2	IC38	H3	RB7	G2		
CN749	H2			RB8	H1		
		LV1	C3	RB11	H1		
D11	K1	LV2	D3	RB12	J2		
D12	G1	LV3	E3				
D13	H1	LV4	E3	RV1	C3		
D14	H1	LV5	F3	RV2	C3		
D15	H1	LV6	F3	RV3	D3		
2) D101	*A2	LV7	G3	RV4	E3		
		LV8	G3	RV5	E3		
E1	B1			RV6	F3		
E2	F1	Q1	*B3	RV7	G3		
E3	G1	Q2	*A3	RV8	H3		
E4	A3	Q3	*B3	RV9	C2		
E5	C4	Q4	*B3	RV10	C2		
E6	J1	Q17	*E3	RV11	D2		
E7	K4	2) Q20	C3	RV12	E2		
		2) Q21	C3	RV13	E2		
IC1	A2	2) Q22	C3	RV14	F2		
IC2	B2	2) Q23	D3	RV15	G2		
IC3	C3	2) Q24	D3	RV16	H2		
IC4	E3	2) Q25	E3	2) RV17	A2		
IC5	F3	2) Q26	E3	2) RV18	B2		
IC6	G3	2) Q27	E3	2) RV19	B2		
IC7	C1	2) Q28	E3	2) RV20	B2		
IC8	E1	2) Q29	F3				
IC9	F2	2) Q30	F3	S11	K1		
IC10	G2	2) Q31	F3	S12	J3		
IC11	A4	2) Q32	F3				
IC12	B4	2) Q33	G3	TP1	A1		
1) IC13	A3	2) Q34	G3	TP2	A1		

20-5 (a)

CARD RACK **REC-09 BOARD** REC-09 BOARD CARD RACK

2100
S/N 10601 and higher
S/N 10601 and higher
S/N 10601 and higher

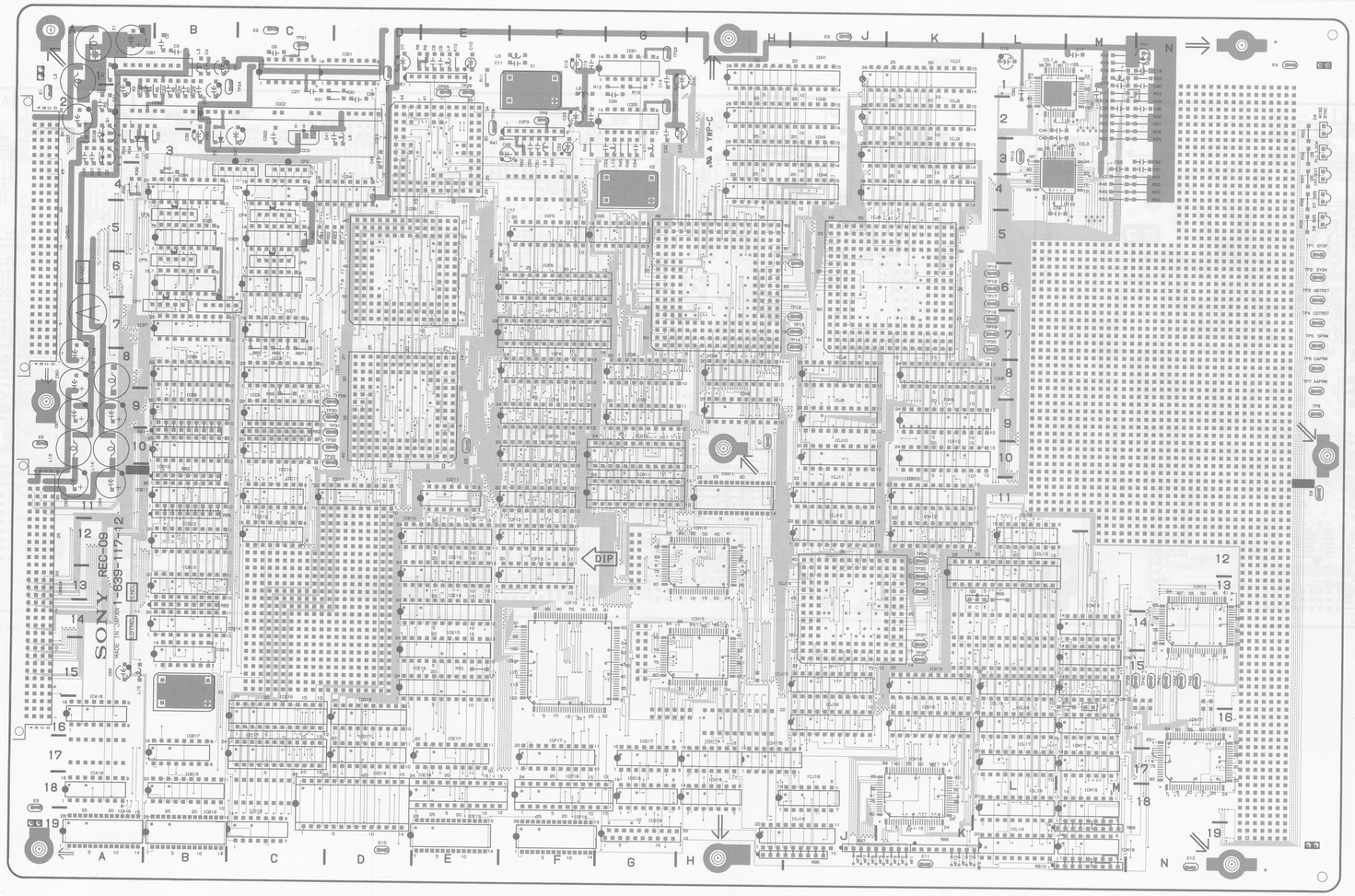

1-639-117-12 A SIDE

REC-09 BOARD CARD RACK

REC-09 BOARD (1-639-117-12)

B Side

DVR-2000	DVR-2100
J ; S/N 10201 and higher	J ; S/N 10601 and higher
UC ; S/N 10201 and higher	UC ; S/N 10601 and higher
EK ; S/N 10301 and higher	EK ; S/N 10601 and higher

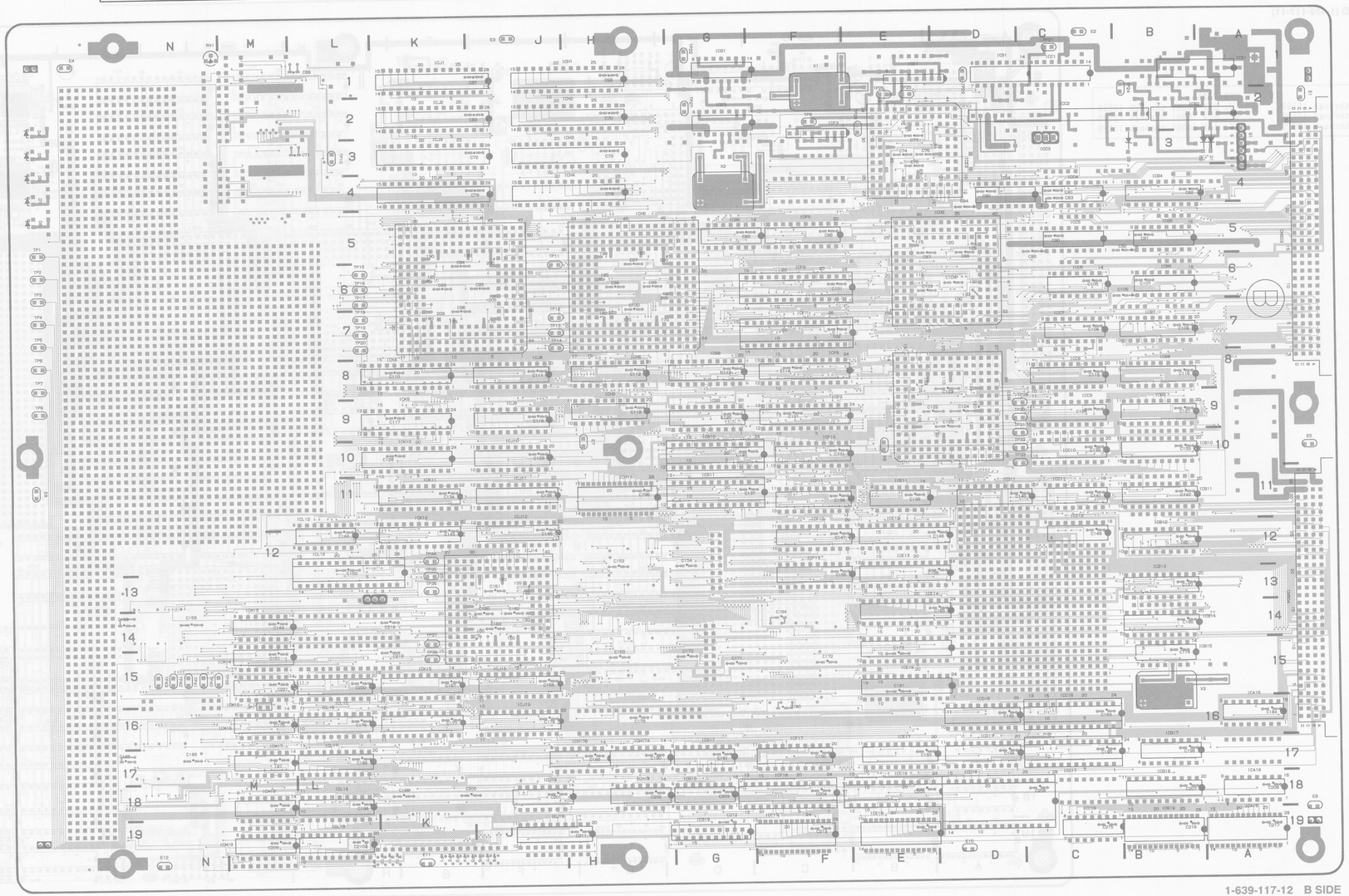

1-639-117-12 B SIDE

REC-09 (1-639-117-12)

DVR-2000
DVR-2100

CN503	A5	TP4	N7
CN504	A13	TP5	N7
		TP6	N7
CP1	C3	TP7	N8
CP2	C3	TP8	N9
CP3	A5	TP9	F2
CP4	C5	TP10	L3
CP5	A6	TP11	J5
CP6	C6	TP15	L6
CP7	A7	TP19	L7
CP8	B7	TP20	L7
		TP21	C1
D1	A3	TP22	G1
D2	A3	TP23	D1
D3	B3	TP24	C1
D4	N2	TP25	E1
D5	N3	TP26	E1
D6	N4	TP27	G2
D7	N4	TP28	E2
D8	N5	TP29	D9
		TP30	D9
E1	A2	TP31	D9
E2	C1	TP32	D10
E3	J1	TP33	D10
E4	N1	TP34	K12
E5	A10	TP35	K12
E6	E10	TP36	K13
E7	H10	TP37	K14
E8	N11	TP38	K15
E9	A18	TP39	N15
E10	D19	TP40	N15
E11	K19	TP41	N15
E12	N19	TP42	N15
		TP43	N15
JP1	M16		
		X1	F1
Q1	A2	X2	G3
Q2	A4	X3	B15
Q3	K13		
RB1	A10		
RB2	C10		
RB3	B11		
RB4	B11		
RB5	B14		
RB6	J19		
RB7	J19		
RB8	K19		
RB9	N19		
RB10	L19		
RV1	N1		
TP1	N5		
TP2	N6		
TP3	N6		

IC No. on this board shows its address.

20-7 (b)

REC-09 BOARD CARD RACK

CARD RACK **REC-09 BOARD**

REC-09 BOARD (1-639-117-12)

B Side

DVR-2000	DVR-2100
J ; S/N 10201 and higher	J ; S/N 10601 and higher
UC ; S/N 10201 and higher	UC ; S/N 10601 and higher
EK ; S/N 10301 and higher	EK ; S/N 10601 and higher

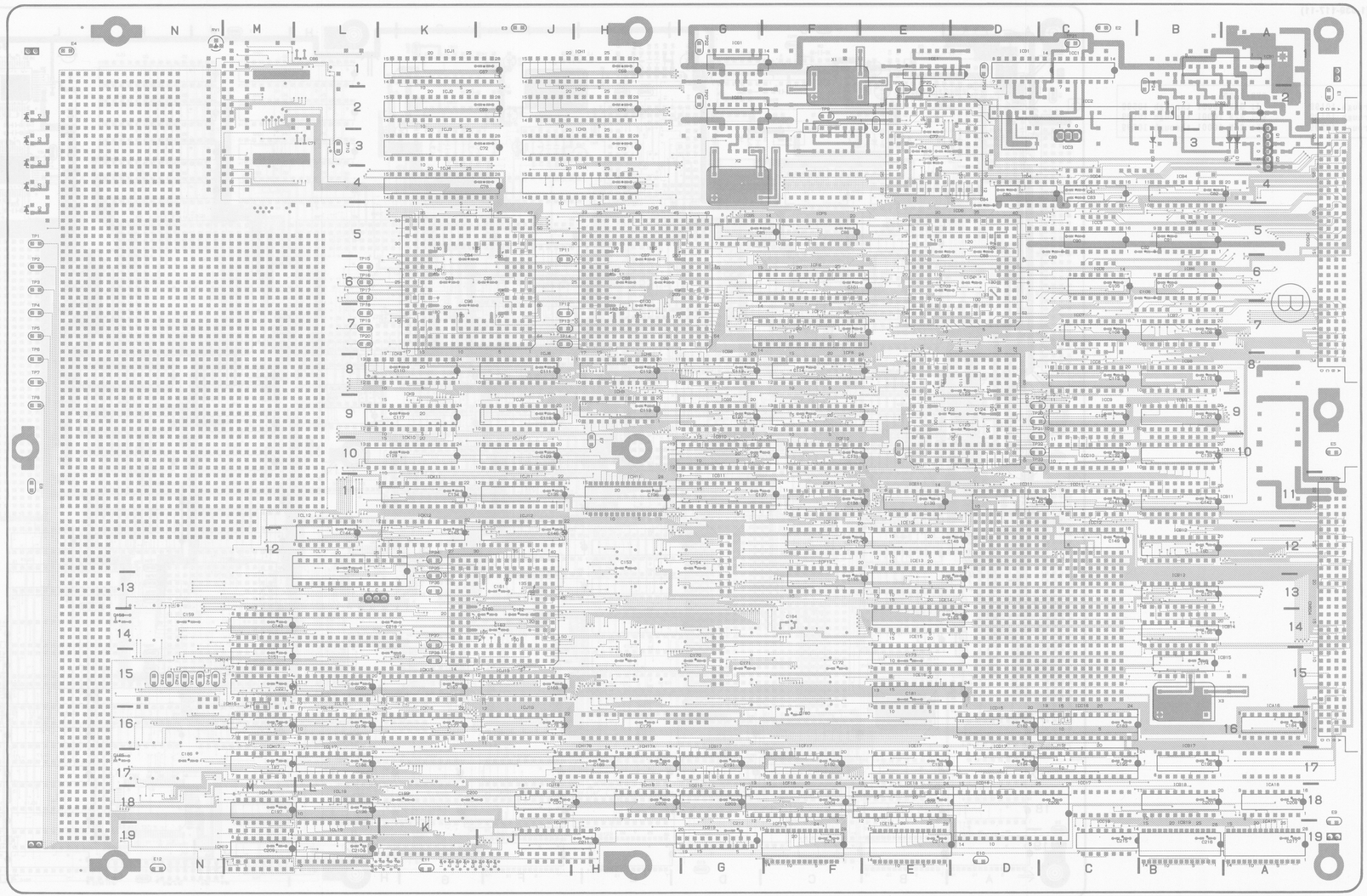

1-639-117-12 B SIDE

REC-09 (1-639-117-12)

DVR-2000
DVR-2100

CN503	A5	TP4	N7
CN504	A13	TP5	N7
		TP6	N7
CP1	C3	TP7	N8
CP2	C3	TP8	N9
CP3	A5	TP9	F2
CP4	C5	TP10	L3
CP5	A6	TP11	J5
CP6	C6	TP15	L6
CP7	A7	TP19	L7
CP8	B7	TP20	L7
		TP21	C1
D1	A3	TP22	G1
D2	A3	TP23	D1
D3	B3	TP24	C1
D4	N2	TP25	E1
D5	N3	TP26	E1
D6	N4	TP27	G2
D7	N4	TP28	E2
D8	N5	TP29	D9
		TP30	D9
E1	A2	TP31	D9
E2	C1	TP32	D10
E3	J1	TP33	D10
E4	N1	TP34	K12
E5	A10	TP35	K12
E6	E10	TP36	K13
E7	H10	TP37	K14
E8	N11	TP38	K15
E9	A18	TP39	N15
E10	D19	TP40	N15
E11	K19	TP41	N15
E12	N19	TP42	N15
		TP43	N15
JP1	M16		
		X1	F1
Q1	A2	X2	G3
Q2	A4	X3	B15
Q3	K13		
RB1	A10		
RB2	C10		
RB3	B11		
RB4	B11		
RB5	B14		
RB6	J19		
RB7	J19		
RB8	K19		
RB9	N19		
RB10	L19		
RV1	N1		
TP1	N5		
TP2	N6		
TP3	N6		

IC No. on this board shows its address.

20-7 (b)

REC-09 BOARD CARD RACK

CARD RACK **REC-09 BOARD**

REC-09 BOARD (1-639-117-12)

B Side

DVR-2000	DVR-2100
J ; S/N 10201 and higher	J ; S/N 10601 and higher
UC ; S/N 10201 and higher	UC ; S/N 10601 and higher
EK ; S/N 10301 and higher	EK ; S/N 10601 and higher

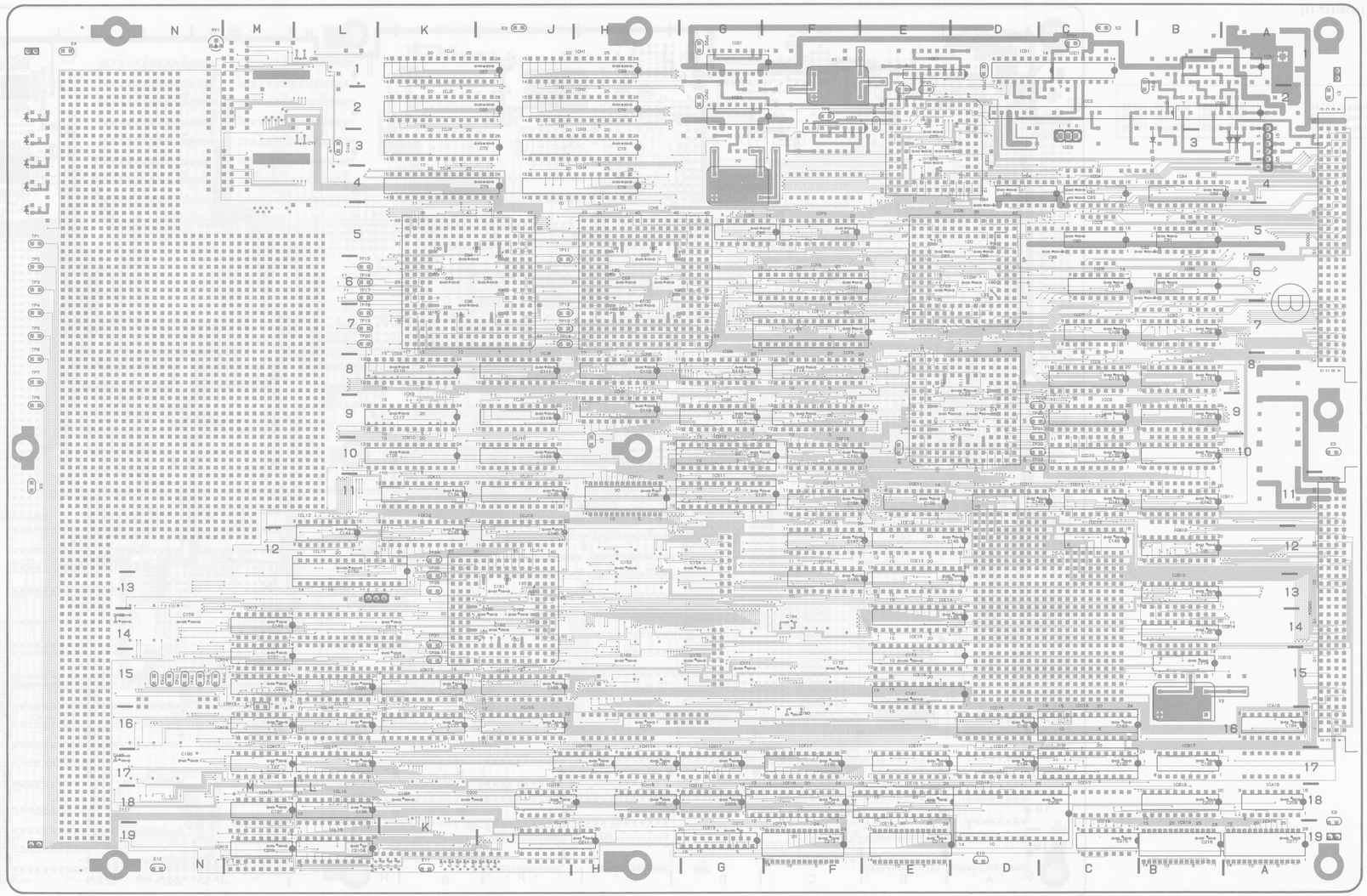

1-639-117-12 B SIDE

REC-09 (1-639-117-12)

DVR-2000
DVR-2100

CN503	A5	TP4	N7
CN504	A13	TP5	N7
		TP6	N7
CP1	C3	TP7	N8
CP2	C3	TP8	N9
CP3	A5	TP9	F2
CP4	C5	TP10	L3
CP5	A6	TP11	J5
CP6	C6	TP15	L6
CP7	A7	TP19	L7
CP8	B7	TP20	L7
		TP21	C1
D1	A3	TP22	G1
D2	A3	TP23	D1
D3	B3	TP24	C1
D4	N2	TP25	E1
D5	N3	TP26	E1
D6	N4	TP27	G2
D7	N4	TP28	E2
D8	N5	TP29	D9
		TP30	D9
E1	A2	TP31	D9
E2	C1	TP32	D10
E3	J1	TP33	D10
E4	N1	TP34	K12
E5	A10	TP35	K12
E6	E10	TP36	K13
E7	H10	TP37	K14
E8	N11	TP38	K15
E9	A18	TP39	N15
E10	D19	TP40	N15
E11	K19	TP41	N15
E12	N19	TP42	N15
		TP43	N15
JP1	M16		
		X1	F1
Q1	A2	X2	G3
Q2	A4	X3	B15
Q3	K13		
RB1	A10		
RB2	C10		
RB3	B11		
RB4	B11		
RB5	B14		
RB6	J19		
RB7	J19		
RB8	K19		
RB9	N19		
RB10	L19		
RV1	N1		
TP1	N5		
TP2	N6		
TP3	N6		

IC No. on this board shows its address.

20-7 (b)

REC-09 BOARD CARD RACK

REC-09 BOARD (1-639-117-11)

REC-09 (1-639-117-11)

DVR-2000
DVR-2100

CN503	A5	TP2	N6
CN504	A13	TP3	N6
		TP4	N7
CP1	C3	TP5	N7
CP2	C3	TP6	N7
CP3	A5	TP7	N8
CP4	C5	TP8	N9
CP5	A6	TP9	F2
CP6	C6	TP10	L3
CP7	A7	TP11	J5
CP8	B7	TP12	J7
		TP13	J7
D1	A3	TP14	J7
D2	A3	TP15	L6
D3	B3	TP16	L6
D4	N2	TP17	L6
D5	N3	TP18	L7
D6	N4	TP19	L7
D7	N4	TP20	L7
D8	N5	TP21	C1
		TP22	G1
E1	A2	TP23	D1
E2	C1	TP24	C1
E3	J1	TP25	E1
E4	N1	TP26	E1
E5	A10	TP27	G2
E6	E10	TP28	E2
E7	H10	TP29	D9
E8	N11	TP30	D9
E9	A18	TP31	D9
E10	D19	TP32	D10
E11	K19	TP33	D10
E12	N19	TP34	K12
		TP35	K12
JP1	M16	TP36	K13
		TP37	K14
Q1	A2	TP38	K15
Q2	A4	TP39	N15
Q3	K13	TP40	N15
		TP41	N15
RB1	A10	TP42	N15
RB2	L10	TP43	N15
RB3	B11		
RB4	B11	X1	F1
RB5	B14	X2	G3
RB6	J19	X3	B15
RB7	J19		
RB8	K19		
RB9	N19		
RB10	L19		
RV1	N1		
TP1	N5		

IC No. on this board shows its address.

A Side

DVR-2000	DVR-2100
J: S/N 10001 through 10199	J: S/N 10001 through 10599
UC: S/N 10001 through 10199	UC: S/N 10001 through 10599
EK: S/N 10001 through 10299	EK: S/N 10001 through 10599

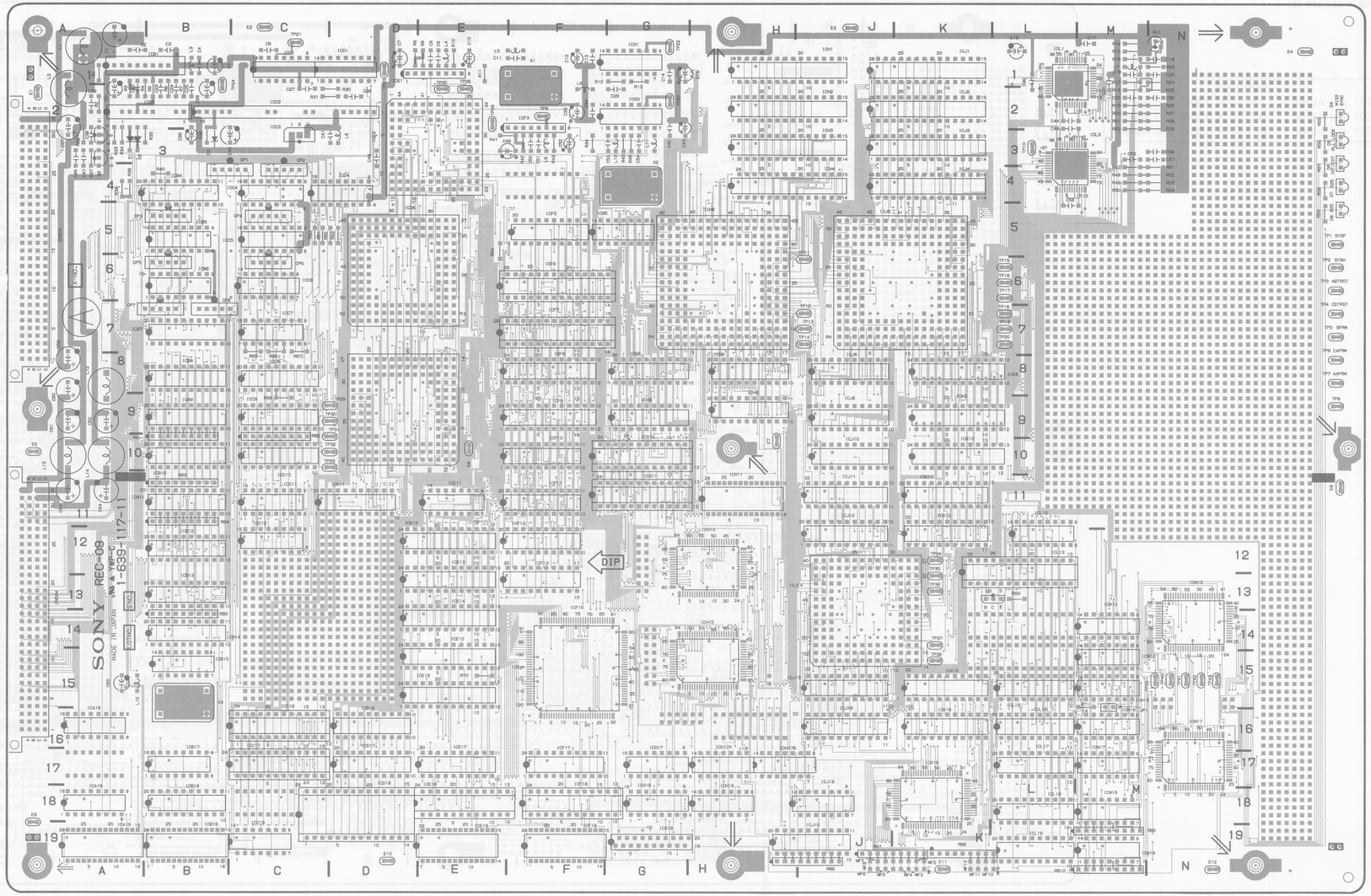

REC-09 BOARD CARD RACK

REC-09 BOARD (1-639-117-11)

REC-09 (1-639-117-11)

DVR-2000
DVR-2100

CN503	A5	TP2	N6
CN504	A13	TP3	N6
		TP4	N7
CP1	C3	TP5	N7
CP2	C3	TP6	N7
CP3	A5	TP7	N8
CP4	C5	TP8	N9
CP5	A6	TP9	F2
CP6	C6	TP10	L3
CP7	A7	TP11	J5
CP8	B7	TP12	J7
		TP13	J7
D1	A3	TP14	J7
D2	A3	TP15	L6
D3	B3	TP16	L6
D4	N2	TP17	L6
D5	N3	TP18	L7
D6	N4	TP19	L7
D7	N4	TP20	L7
D8	N5	TP21	C1
		TP22	G1
E1	A2	TP23	D1
E2	C1	TP24	C1
E3	J1	TP25	E1
E4	N1	TP26	E1
E5	A10	TP27	G2
E6	E10	TP28	E2
E7	H10	TP29	D9
E8	N11	TP30	D9
E9	A18	TP31	D9
E10	D19	TP32	D10
E11	K19	TP33	D10
E12	N19	TP34	K12
		TP35	K12
JP1	M16	TP36	K13
		TP37	K14
Q1	A2	TP38	K15
Q2	A4	TP39	N15
Q3	K13	TP40	N15
		TP41	N15
RB1	A10	TP42	N15
RB2	L10	TP43	N15
RB3	B11		
RB4	B11	X1	F1
RB5	B14	X2	G3
RB6	J19	X3	B15
RB7	J19		
RB8	K19		
RB9	N19		
RB10	L19		
RV1	N1		
TP1	N5		

IC No. on this board shows its address.

A Side

DVR-2000	DVR-2100
J: S/N 10001 through 10199	J: S/N 10001 through 10599
UC: S/N 10001 through 10199	UC: S/N 10001 through 10599
EK: S/N 10001 through 10299	EK: S/N 10001 through 10599

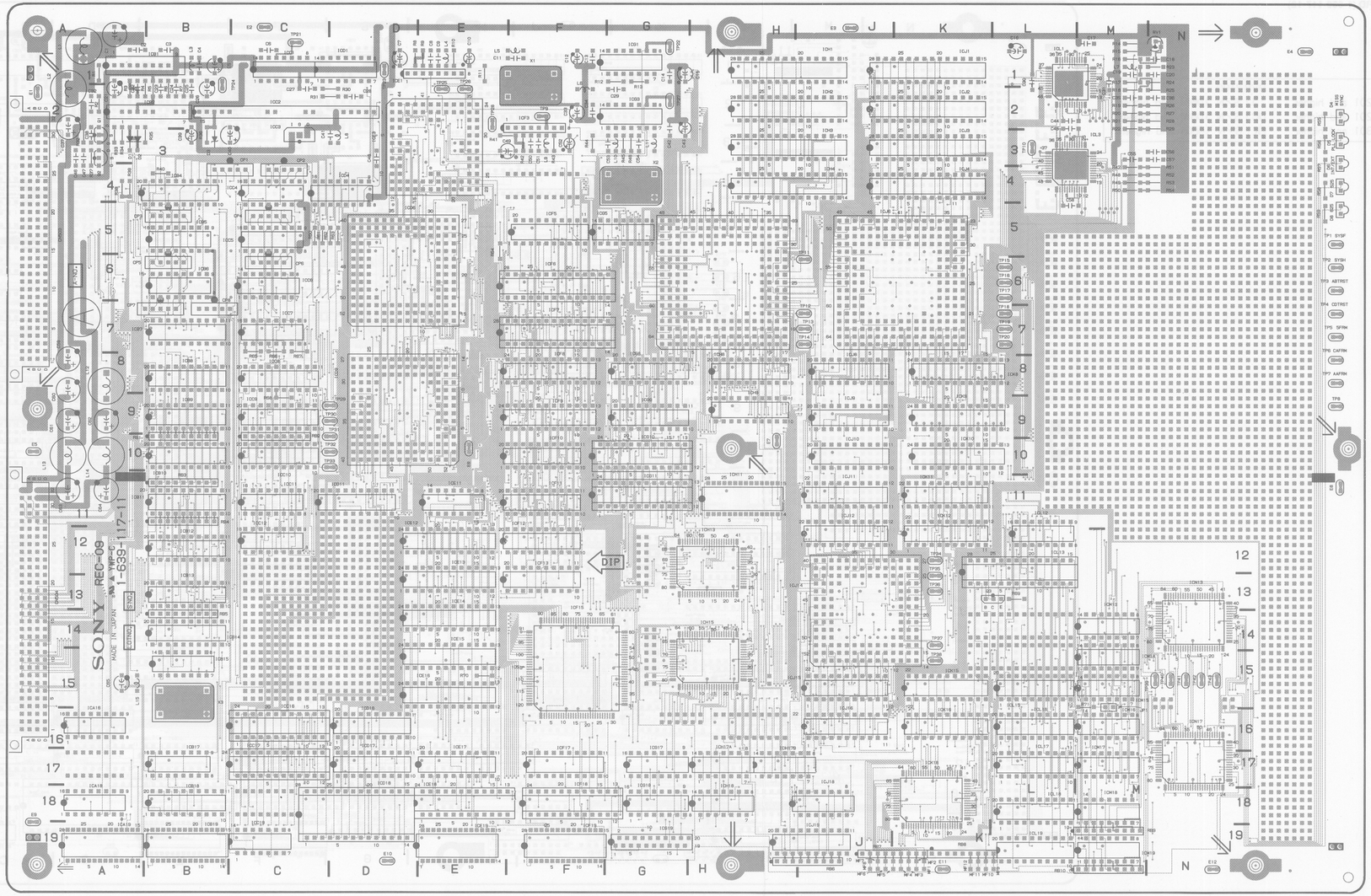

REC-09 BOARD CARD RACK

CARD RACK **REC-09 BOARD**

REC-09 BOARD (1-639-117-11)

B Side

DVR-2000	DVR-2100
J: S/N 10001 through 10199	J: S/N 10001 through 10599
UC: S/N 10001 through 10199	UC: S/N 10001 through 10599
EK: S/N 10001 through 10299	EK: S/N 10001 through 10599

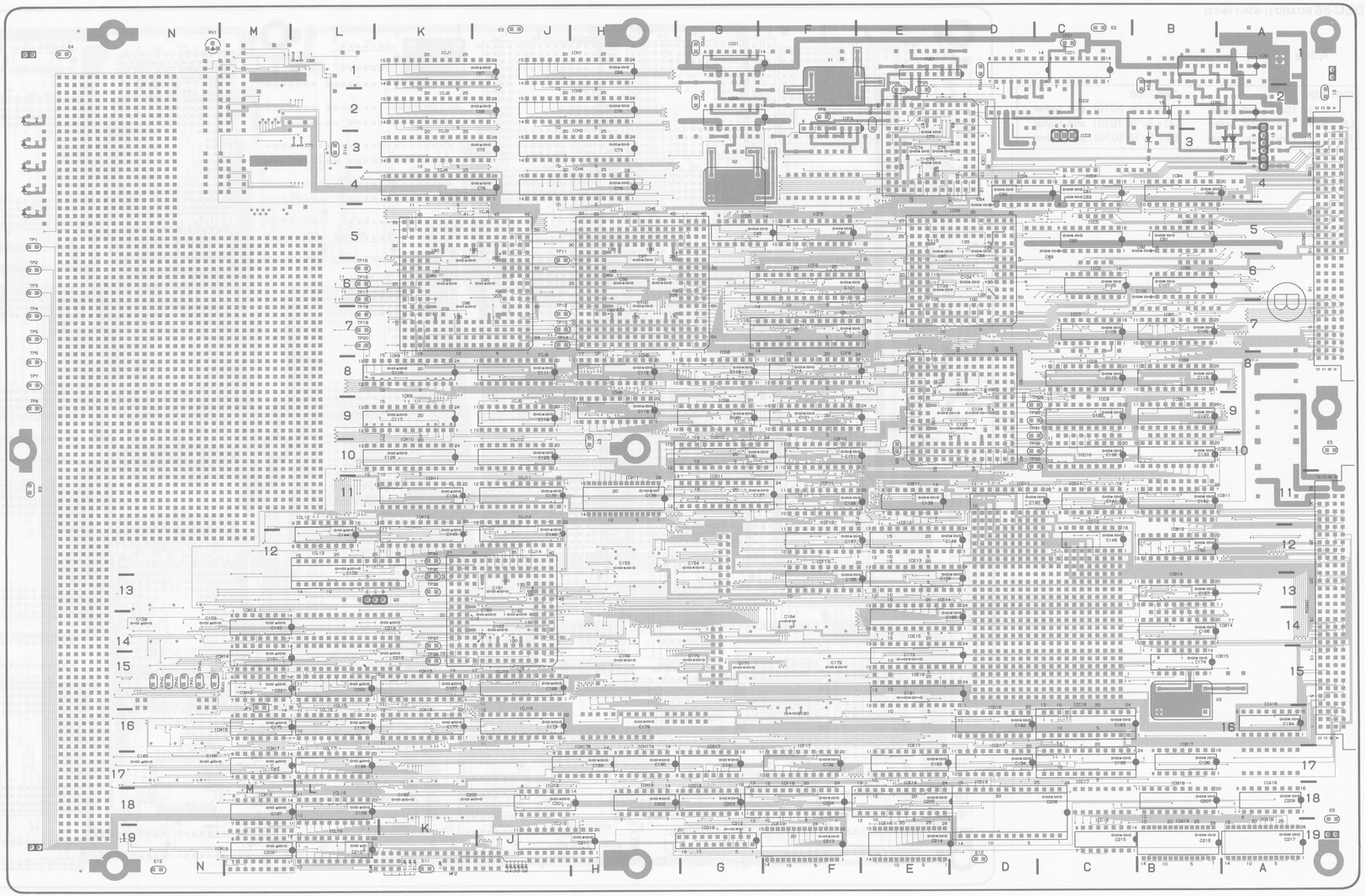

1-639-117-11 B SIDE

REC-09 (1-639-117-11)

DVR-2000
DVR-2100

CN503	A5	TP2	N6
CN504	A13	TP3	N6
		TP4	N7
CP1	C3	TP5	N7
CP2	C3	TP6	N7
CP3	A5	TP7	N8
CP4	C5	TP8	N9
CP5	A6	TP9	F2
CP6	C6	TP10	L3
CP7	A7	TP11	J5
CP8	B7	TP12	J7
		TP13	J7
D1	A3	TP14	J7
D2	A3	TP15	L6
D3	B3	TP16	L6
D4	N2	TP17	L6
D5	N3	TP18	L7
D6	N4	TP19	L7
D7	N4	TP20	L7
D8	N5	TP21	C1
		TP22	G1
E1	A2	TP23	D1
E2	C1	TP24	C1
E3	J1	TP25	E1
E4	N1	TP26	E1
E5	A10	TP27	G2
E6	E10	TP28	E2
E7	H10	TP29	D9
E8	N11	TP30	D9
E9	A18	TP31	D9
E10	D19	TP32	D10
E11	K19	TP33	D10
E12	N19	TP34	K12
		TP35	K12
JP1	M16	TP36	K13
		TP37	K14
Q1	A2	TP38	K15
Q2	A4	TP39	N15
Q3	K13	TP40	N15
		TP41	N15
RB1	A10	TP42	N15
RB2	L10	TP43	N15
RB3	B11		
RB4	B11	X1	F1
RB5	B14	X2	G3
RB6	J19	X3	B15
RB7	J19		
RB8	K19		
RB9	N19		
RB10	L19		
RV1	N1		
TP1	N5		

IC No. on this board shows its address.

20-7 (a)

REC-09 BOARD CARD RACK

CARD RACK **REC-09 BOARD**

REC-09 BOARD (1-639-117-11)

B Side

DVR-2000	DVR-2100
J: S/N 10001 through 10199	J: S/N 10001 through 10599
UC: S/N 10001 through 10199	UC: S/N 10001 through 10599
EK: S/N 10001 through 10299	EK: S/N 10001 through 10599

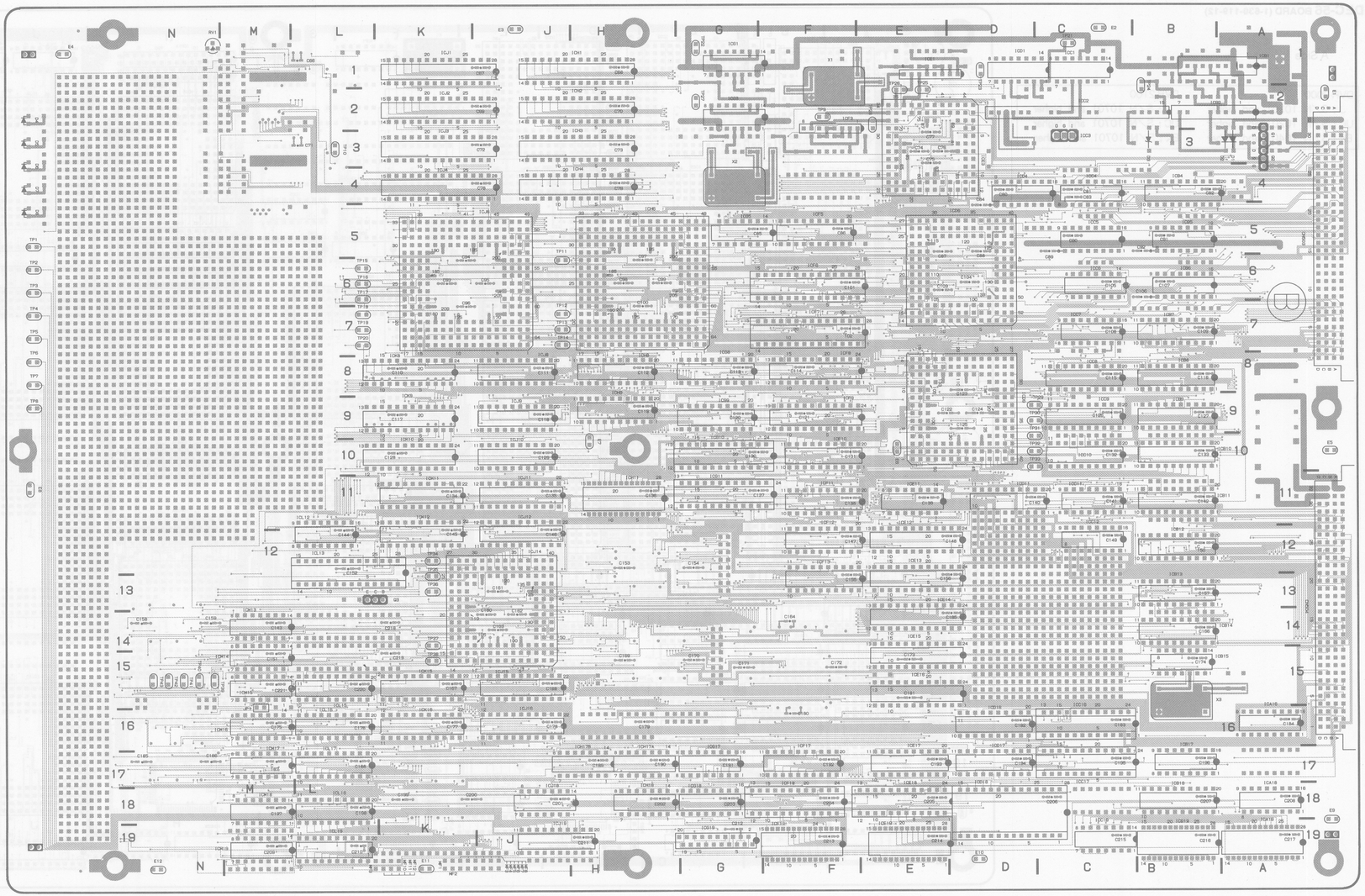

1-639-117-11 B SIDE

REC-09 (1-639-117-11)

DVR-2000
DVR-2100

CN503	A5	TP2	N6
CN504	A13	TP3	N6
		TP4	N7
CP1	C3	TP5	N7
CP2	C3	TP6	N7
CP3	A5	TP7	N8
CP4	C5	TP8	N9
CP5	A6	TP9	F2
CP6	C6	TP10	L3
CP7	A7	TP11	J5
CP8	B7	TP12	J7
		TP13	J7
D1	A3	TP14	J7
D2	A3	TP15	L6
D3	B3	TP16	L6
D4	N2	TP17	L6
D5	N3	TP18	L7
D6	N4	TP19	L7
D7	N4	TP20	L7
D8	N5	TP21	C1
		TP22	G1
E1	A2	TP23	D1
E2	C1	TP24	C1
E3	J1	TP25	E1
E4	N1	TP26	E1
E5	A10	TP27	G2
E6	E10	TP28	E2
E7	H10	TP29	D9
E8	N11	TP30	D9
E9	A18	TP31	D9
E10	D19	TP32	D10
E11	K19	TP33	D10
E12	N19	TP34	K12
		TP35	K12
JP1	M16	TP36	K13
		TP37	K14
Q1	A2	TP38	K15
Q2	A4	TP39	N15
Q3	K13	TP40	N15
		TP41	N15
RB1	A10	TP42	N15
RB2	L10	TP43	N15
RB3	B11		
RB4	B11	X1	F1
RB5	B14	X2	G3
RB6	J19	X3	B15
RB7	J19		
RB8	K19		
RB9	N19		
RB10	L19		
RV1	N1		
TP1	N5		

IC No. on this board shows its address.

20-7 (a)

DEC-56 BOARD CARD RACK

DEC-56 BOARD (1-639-119-12)

DEC-56 (1-639-119-12)

DVR-2000
DVR-2100

CN507	A6		
CN508	A15	TP1	N12
		TP2	N12
CP1	B1	TP3	N12
CP2	B1	TP4	N12
CP3	B3	TP5	N13
CP4	B4	TP6	N13
CP5	B5	TP7	N13
CP6	B5	TP8	N13
CP7	B7	TP9	N13
CP8	B6	TP10	N14
CP9	B8	TP11	N14
CP10	B8	TP12	N14
CP11	B10	TP13	N15
CP12	B9	TP14	N15
CP13	B12	TP15	N16
CP14	B12	TP16	N16
CP15	B13	TP17	N16
CP16	B13	TP18	N17
		TP25	D3
D1	N3	TP26	D3
D2	N3	TP48	D6
D3	N3	TP49	D7
D4	N4	TP55	D9
D9	N7	TP56	D9
D10	N7	TP62	D12
		TP63	D13
E1	A1	TP83	H19
E2	H1	TP84	H19
E3	M1	TP85	H17
E4	K7		
E5	A9	X1	F1
E7	G12		
E8	N11		
E9	A19		
E10	G20		
E12	N19		
RB1	N3		
RB2	N5		
RB5	C13		
RB6	D13		
RB7	C14		
RB8	E14		
RB9	A14		
RB10	D15		
RB11	F14		
RB12	A16		
RB13	B16		
RB14	D16		
RB15	E16		
RB16	A16		
RB17	B16		
RB18	B17		
RB19	D18		
RB20	D19		

IC No. on this board shows its address.

A Side

DVR-2000	DVR-2100
J ; S/N 10201 and higher	J ; S/N 10701 and higher
UC ; S/N 10201 and higher	UC ; S/N 10701 and higher
EK ; S/N 10401 and higher	EK ; S/N 10701 and higher

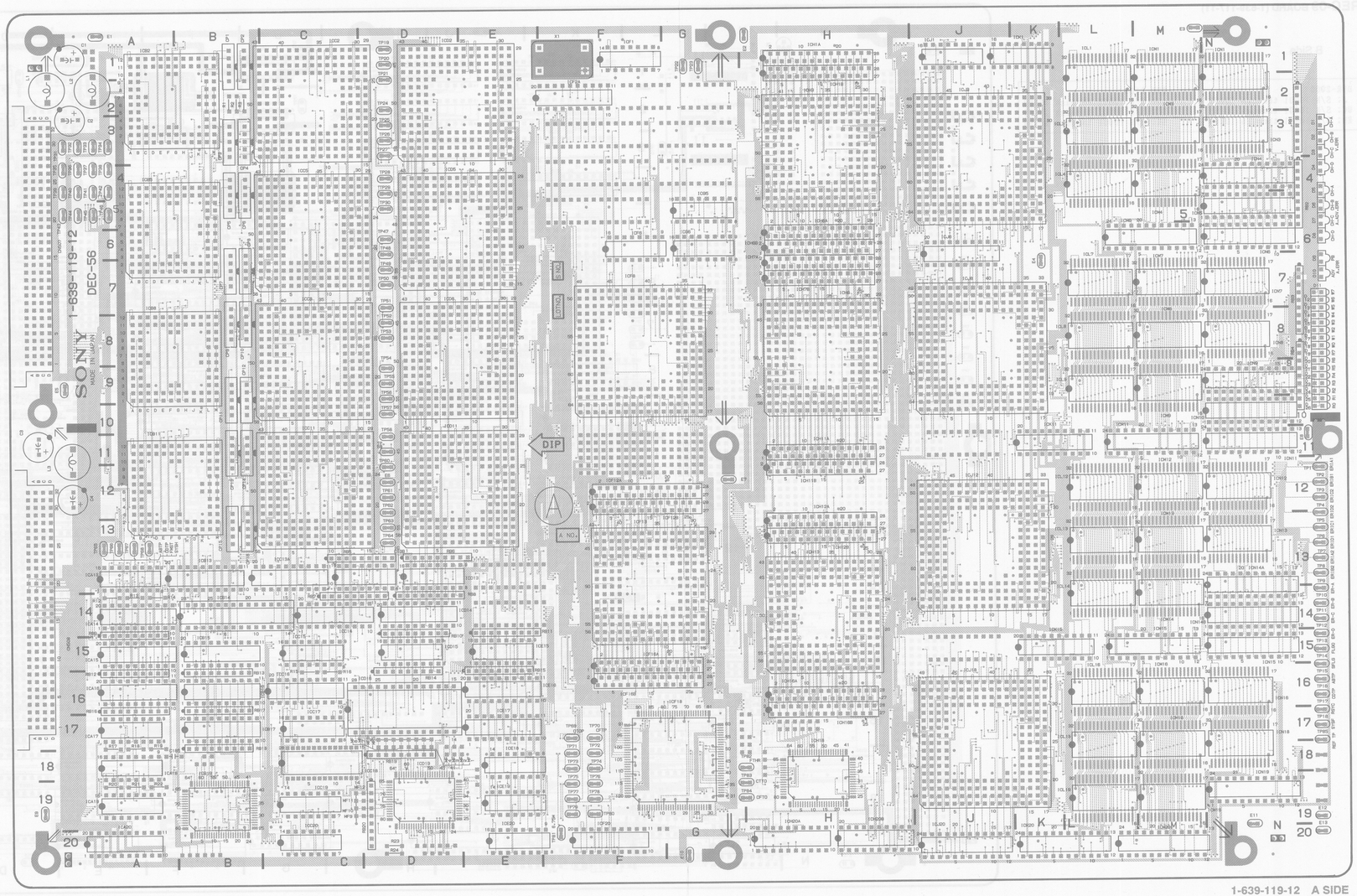

1-639-119-12 A SIDE

DEC-56 BOARD CARD RACK

DEC-56 BOARD (1-639-119-12)

DEC-56 (1-639-119-12)

DVR-2000
DVR-2100

CN507	A6		
CN508	A15	TP1	N12
		TP2	N12
CP1	B1	TP3	N12
CP2	B1	TP4	N12
CP3	B3	TP5	N13
CP4	B4	TP6	N13
CP5	B5	TP7	N13
CP6	B5	TP8	N13
CP7	B7	TP9	N13
CP8	B6	TP10	N14
CP9	B8	TP11	N14
CP10	B8	TP12	N14
CP11	B10	TP13	N15
CP12	B9	TP14	N15
CP13	B12	TP15	N16
CP14	B12	TP16	N16
CP15	B13	TP17	N16
CP16	B13	TP18	N17
		TP25	D3
D1	N3	TP26	D3
D2	N3	TP48	D6
D3	N3	TP49	D7
D4	N4	TP55	D9
D9	N7	TP56	D9
D10	N7	TP62	D12
		TP63	D13
E1	A1	TP83	H19
E2	H1	TP84	H19
E3	M1	TP85	H17
E4	K7		
E5	A9	X1	F1
E7	G12		
E8	N11		
E9	A19		
E10	G20		
E12	N19		
RB1	N3		
RB2	N5		
RB5	C13		
RB6	D13		
RB7	C14		
RB8	E14		
RB9	A14		
RB10	D15		
RB11	F14		
RB12	A16		
RB13	B16		
RB14	D16		
RB15	E16		
RB16	A16		
RB17	B16		
RB18	B17		
RB19	D18		
RB20	D19		

IC No. on this board shows its address.

A Side

DVR-2000	DVR-2100
J ; S/N 10201 and higher	J ; S/N 10701 and higher
UC ; S/N 10201 and higher	UC ; S/N 10701 and higher
EK ; S/N 10401 and higher	EK ; S/N 10701 and higher

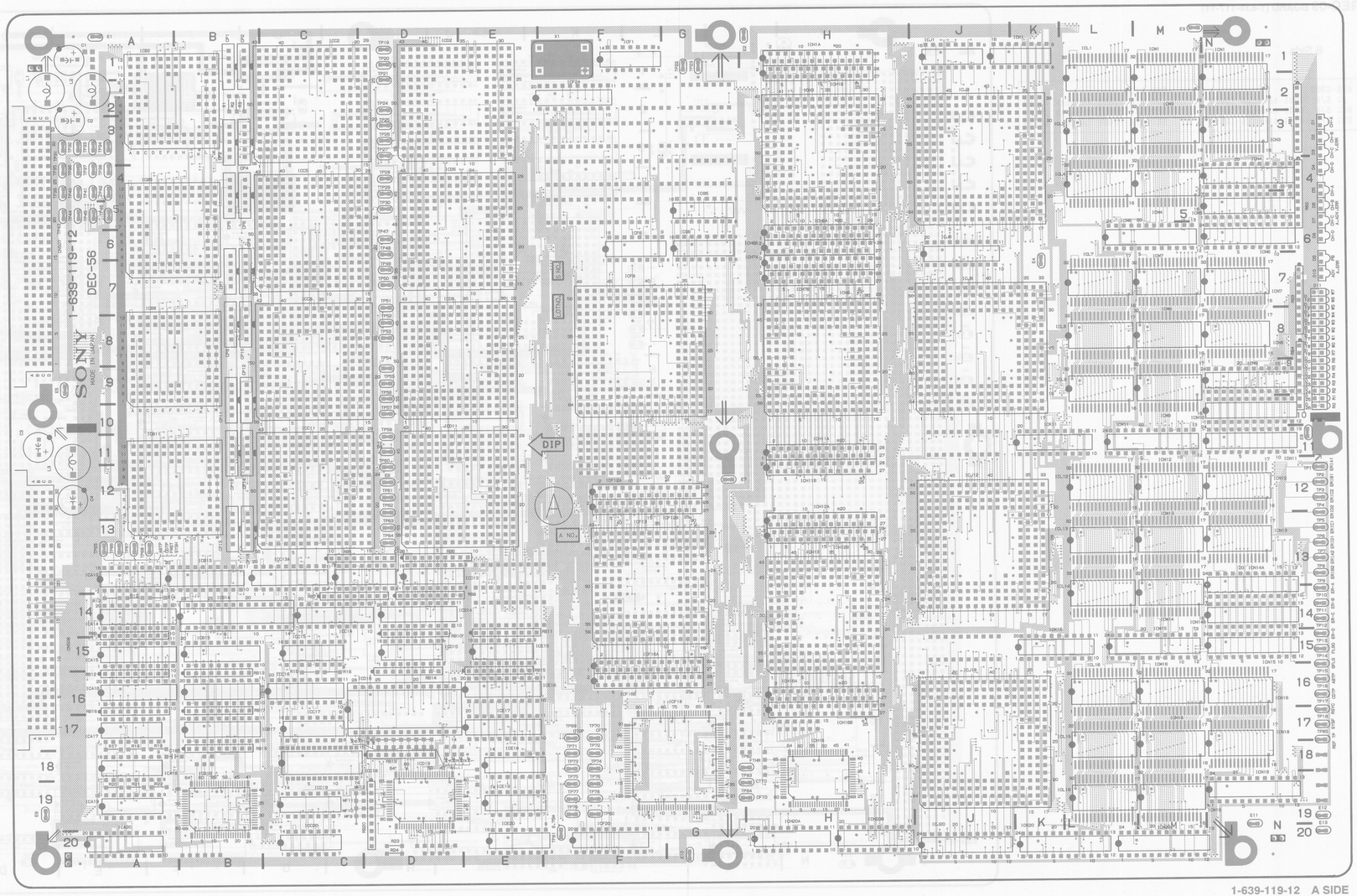

1-639-119-12 A SIDE

CARD RACK DEC-56 BOARD DEC-56 BOARD CARD RACK

DEC-56 BOARD (1-639-119-12)

DEC-56 (1-639-119-12)

DVR-2000
DVR-2100

CN507	A6		
CN508	A15	TP1	N12
		TP2	N12
CP1	B1	TP3	N12
CP2	B1	TP4	N12
CP3	B3	TP5	N13
CP4	B4	TP6	N13
CP5	B5	TP7	N13
CP6	B5	TP8	N13
CP7	B7	TP9	N13
CP8	B6	TP10	N14
CP9	B8	TP11	N14
CP10	B8	TP12	N14
CP11	B10	TP13	N15
CP12	B9	TP14	N15
CP13	B12	TP15	N16
CP14	B12	TP16	N16
CP15	B13	TP17	N16
CP16	B13	TP18	N17
		TP25	D3
D1	N3	TP26	D3
D2	N3	TP48	D6
D3	N3	TP49	D7
D4	N4	TP55	D9
D9	N7	TP56	D9
D10	N7	TP62	D12
		TP63	D13
E1	A1	TP83	H19
E2	H1	TP84	H19
E3	M1	TP85	H17
E4	K7		
E5	A9	X1	F1
E7	G12		
E8	N11		
E9	A19		
E10	G20		
E12	N19		
RB1	N3		
RB2	N5		
RB5	C13		
RB6	D13		
RB7	C14		
RB8	E14		
RB9	A14		
RB10	D15		
RB11	F14		
RB12	A16		
RB13	B16		
RB14	D16		
RB15	E16		
RB16	A16		
RB17	B16		
RB18	B17		
RB19	D18		
RB20	D19		

IC No. on this board shows its address.

A Side

DVR-2000	DVR-2100
J ; S/N 10201 and higher	J ; S/N 10701 and higher
UC ; S/N 10201 and higher	UC ; S/N 10701 and higher
EK ; S/N 10401 and higher	EK ; S/N 10701 and higher

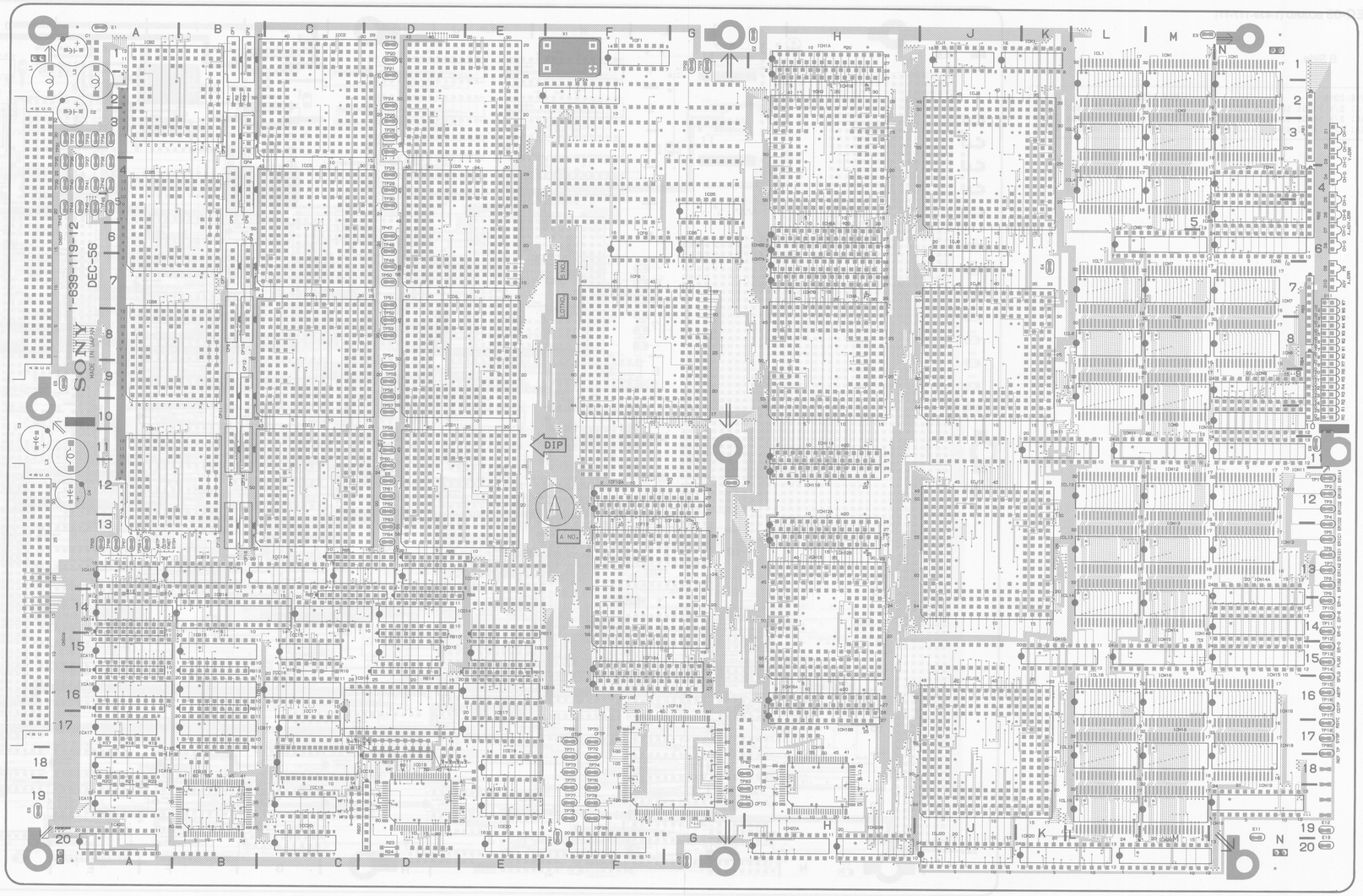

1-639-119-12 A SIDE

20-8 (b)

CARD RACK DEC-56 BOARD DEC-56 BOARD CARD RACK

DEC-56 BOARD (1-639-119-12)

DEC-56 (1-639-119-12)

DVR-2000
DVR-2100

CN507	A6		
CN508	A15	TP1	N12
		TP2	N12
CP1	B1	TP3	N12
CP2	B1	TP4	N12
CP3	B3	TP5	N13
CP4	B4	TP6	N13
CP5	B5	TP7	N13
CP6	B5	TP8	N13
CP7	B7	TP9	N13
CP8	B6	TP10	N14
CP9	B8	TP11	N14
CP10	B8	TP12	N14
CP11	B10	TP13	N15
CP12	B9	TP14	N15
CP13	B12	TP15	N16
CP14	B12	TP16	N16
CP15	B13	TP17	N16
CP16	B13	TP18	N17
		TP25	D3
D1	N3	TP26	D3
D2	N3	TP48	D6
D3	N3	TP49	D7
D4	N4	TP55	D9
D9	N7	TP56	D9
D10	N7	TP62	D12
		TP63	D13
E1	A1	TP83	H19
E2	H1	TP84	H19
E3	M1	TP85	H17
E4	K7		
E5	A9	X1	F1
E7	G12		
E8	N11		
E9	A19		
E10	G20		
E12	N19		
RB1	N3		
RB2	N5		
RB5	C13		
RB6	D13		
RB7	C14		
RB8	E14		
RB9	A14		
RB10	D15		
RB11	F14		
RB12	A16		
RB13	B16		
RB14	D16		
RB15	E16		
RB16	A16		
RB17	B16		
RB18	B17		
RB19	D18		
RB20	D19		

IC No. on this board shows its address.

A Side

DVR-2000	DVR-2100
J ; S/N 10201 and higher	J ; S/N 10701 and higher
UC ; S/N 10201 and higher	UC ; S/N 10701 and higher
EK ; S/N 10401 and higher	EK ; S/N 10701 and higher

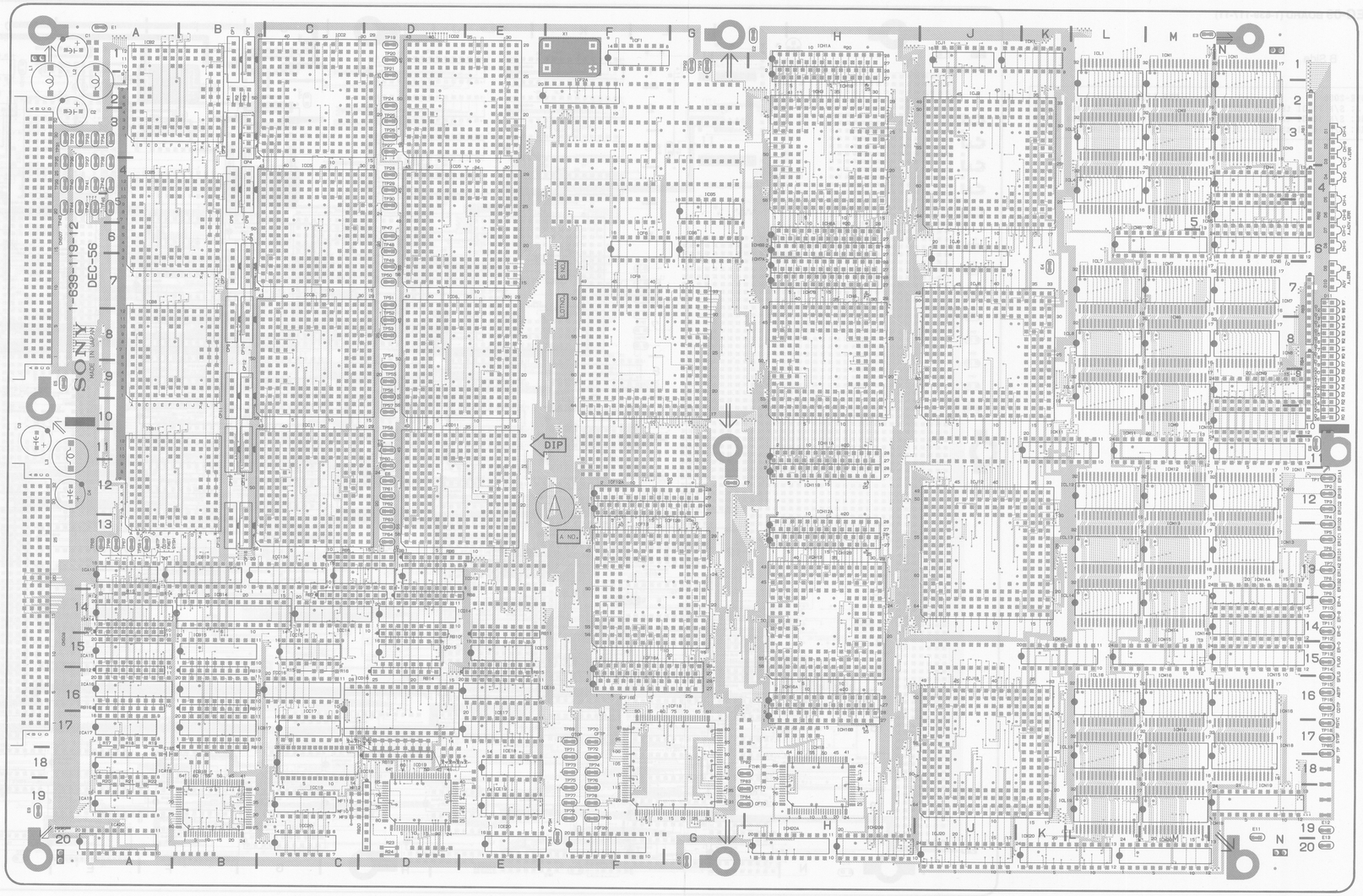

1-639-119-12 A SIDE

20-8 (b)

CARD RACK DEC-56 BOARD DEC-56 BOARD CARD RACK

DEC-56 (1-639-119-12)

DVR-2000
DVR-2100

CN507	A6		
CN508	A15	TP1	N12
		TP2	N12
CP1	B1	TP3	N12
CP2	B1	TP4	N12
CP3	B3	TP5	N13
CP4	B4	TP6	N13
CP5	B5	TP7	N13
CP6	B5	TP8	N13
CP7	B7	TP9	N13
CP8	B6	TP10	N14
CP9	B8	TP11	N14
CP10	B8	TP12	N14
CP11	B10	TP13	N15
CP12	B9	TP14	N15
CP13	B12	TP15	N16
CP14	B12	TP16	N16
CP15	B13	TP17	N16
CP16	B13	TP18	N17
		TP25	D3
D1	N3	TP26	D3
D2	N3	TP48	D6
D3	N3	TP49	D7
D4	N4	TP55	D9
D9	N7	TP56	D9
D10	N7	TP62	D12
		TP63	D13
E1	A1	TP83	H19
E2	H1	TP84	H19
E3	M1	TP85	H17
E4	K7		
E5	A9	X1	F1
E7	G12		
E8	N11		
E9	A19		
E10	G20		
E12	N19		
RB1	N3		
RB2	N5		
RB5	C13		
RB6	D13		
RB7	C14		
RB8	E14		
RB9	A14		
RB10	D15		
RB11	F14		
RB12	A16		
RB13	B16		
RB14	D16		
RB15	E16		
RB16	A16		
RB17	B16		
RB18	B17		
RB19	D18		
RB20	D19		

IC No. on this board shows its address.

DEC-56 BOARD (1-639-119-12)

A Side

DVR-2000	DVR-2100
J ; S/N 10201 and higher	J ; S/N 10701 and higher
UC ; S/N 10201 and higher	UC ; S/N 10701 and higher
EK ; S/N 10401 and higher	EK ; S/N 10701 and higher

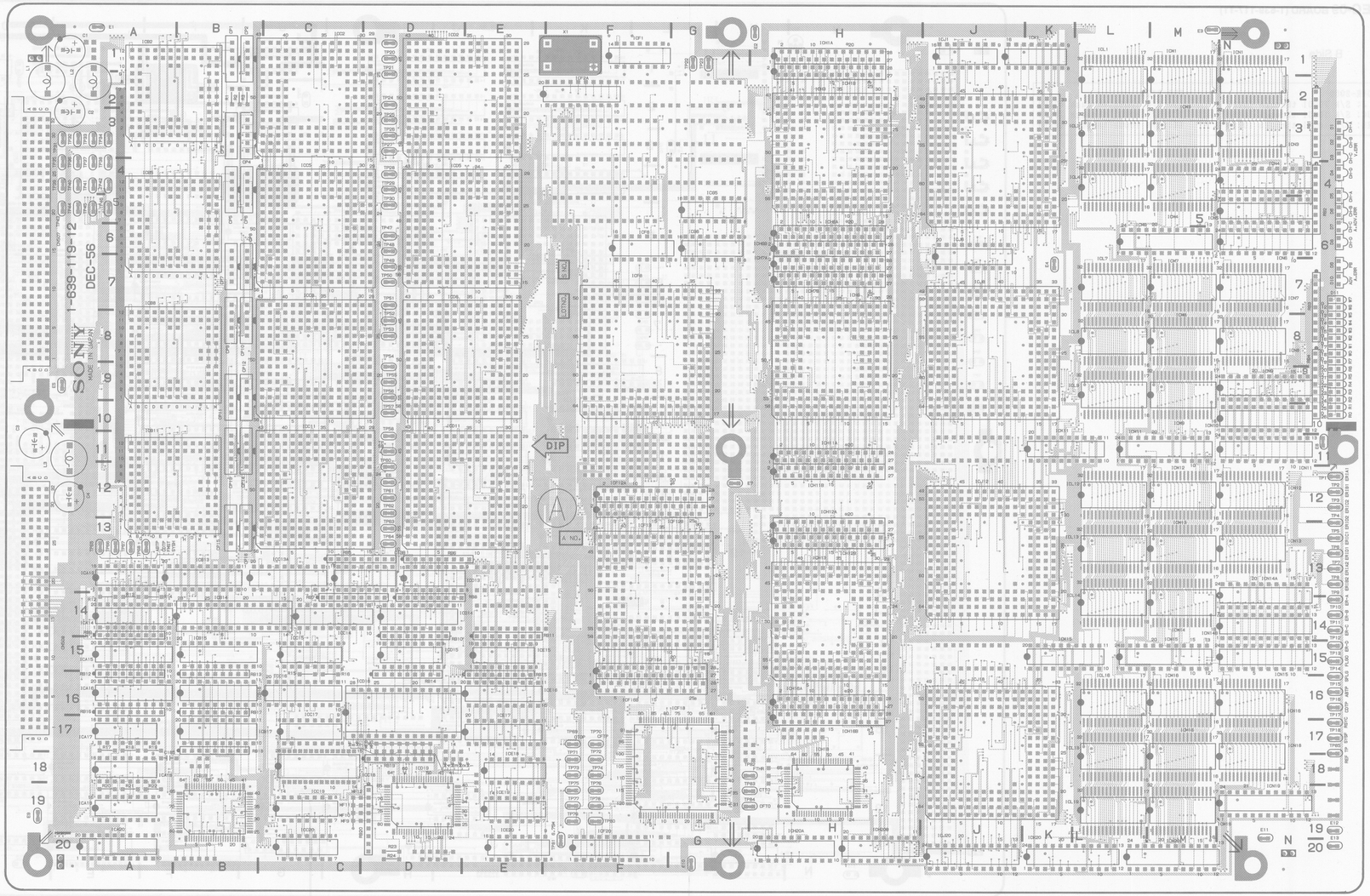

1-639-119-12 A SIDE

20-8 (b)

CARD RACK DEC-56 BOARD DEC-56 BOARD CARD RACK

DEC-56 (1-639-119-12)

DVR-2000
DVR-2100

CN507	A6		
CN508	A15	TP1	N12
		TP2	N12
CP1	B1	TP3	N12
CP2	B1	TP4	N12
CP3	B3	TP5	N13
CP4	B4	TP6	N13
CP5	B5	TP7	N13
CP6	B5	TP8	N13
CP7	B7	TP9	N13
CP8	B6	TP10	N14
CP9	B8	TP11	N14
CP10	B8	TP12	N14
CP11	B10	TP13	N15
CP12	B9	TP14	N15
CP13	B12	TP15	N16
CP14	B12	TP16	N16
CP15	B13	TP17	N16
CP16	B13	TP18	N17
		TP25	D3
D1	N3	TP26	D3
D2	N3	TP48	D6
D3	N3	TP49	D7
D4	N4	TP55	D9
D9	N7	TP56	D9
D10	N7	TP62	D12
		TP63	D13
E1	A1	TP83	H19
E2	H1	TP84	H19
E3	M1	TP85	H17
E4	K7		
E5	A9	X1	F1
E7	G12		
E8	N11		
E9	A19		
E10	G20		
E12	N19		
RB1	N3		
RB2	N5		
RB5	C13		
RB6	D13		
RB7	C14		
RB8	E14		
RB9	A14		
RB10	D15		
RB11	F14		
RB12	A16		
RB13	B16		
RB14	D16		
RB15	E16		
RB16	A16		
RB17	B16		
RB18	B17		
RB19	D18		
RB20	D19		

IC No. on this board shows its address.

DEC-56 BOARD (1-639-119-12)

A Side

DVR-2000	DVR-2100
J ; S/N 10201 and higher	J ; S/N 10701 and higher
UC ; S/N 10201 and higher	UC ; S/N 10701 and higher
EK ; S/N 10401 and higher	EK ; S/N 10701 and higher

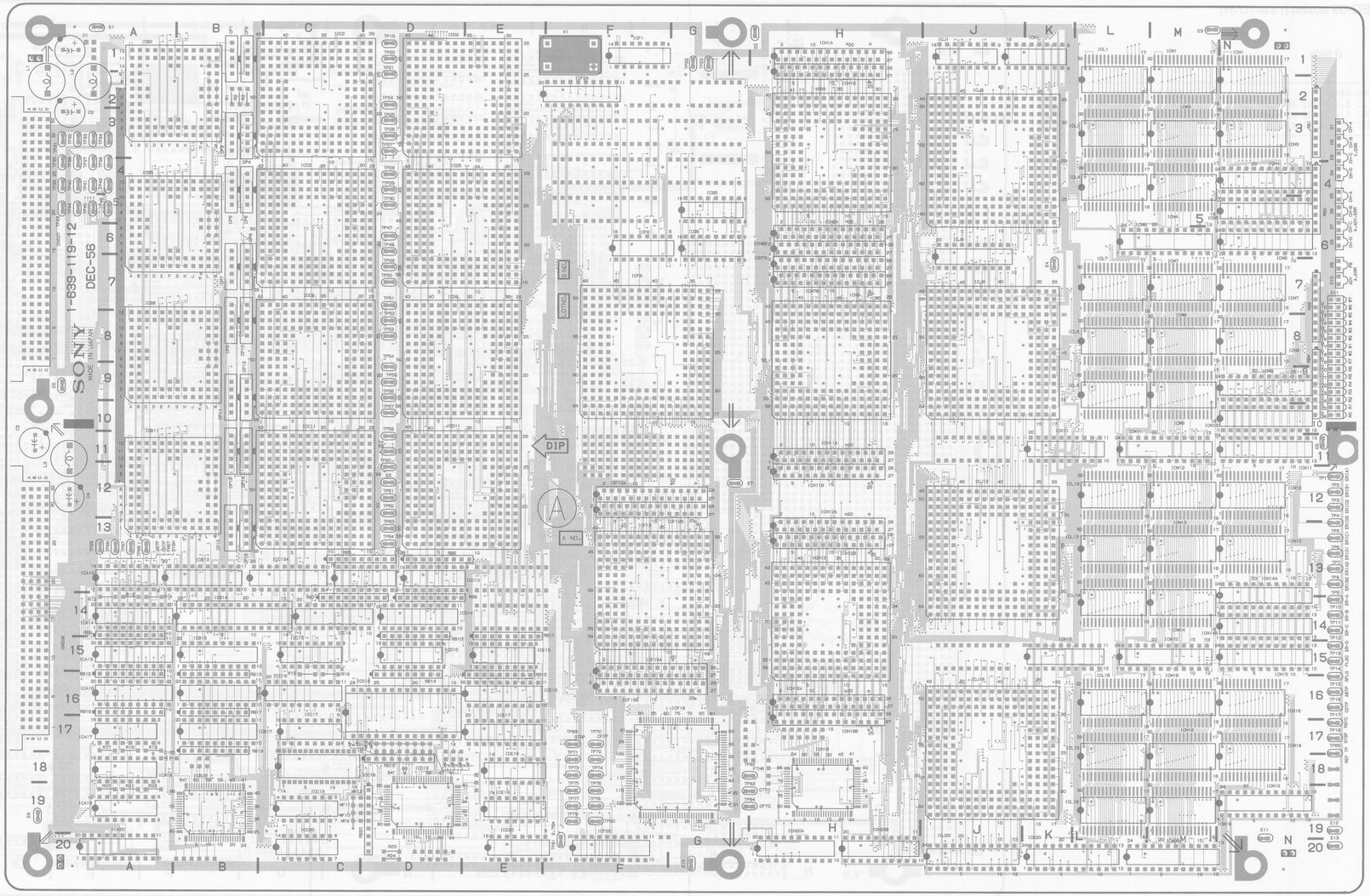

1-639-119-12 A SIDE

20-8 (b)

DEC-56 BOARD (1-639-119-12)

B Side

DVR-2000	DVR-2100
J ; S/N 10201 and higher	J ; S/N 10701 and higher
UC ; S/N 10201 and higher	UC ; S/N 10701 and higher
EK ; S/N 10401 and higher	EK ; S/N 10701 and higher

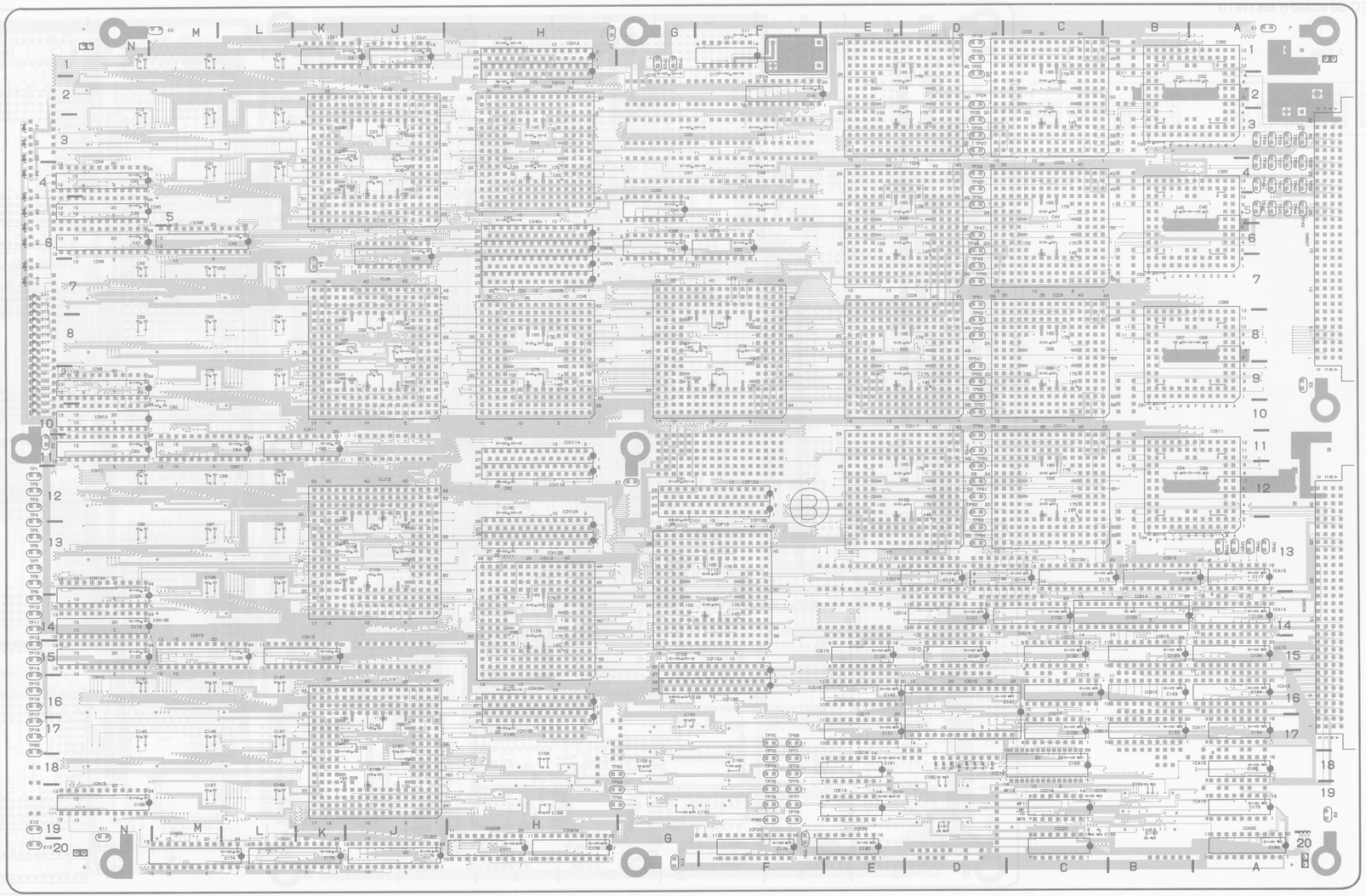

1-639-119-12 B SIDE

DEC-56 (1-639-119-12)

DVR-2000
DVR-2100

CN507	A6		
CN508	A15	TP1	N12
		TP2	N12
CP1	B1	TP3	N12
CP2	B1	TP4	N12
CP3	B3	TP5	N13
CP4	B4	TP6	N13
CP5	B5	TP7	N13
CP6	B5	TP8	N13
CP7	B7	TP9	N13
CP8	B6	TP10	N14
CP9	B8	TP11	N14
CP10	B8	TP12	N14
CP11	B10	TP13	N15
CP12	B9	TP14	N15
CP13	B12	TP15	N16
CP14	B12	TP16	N16
CP15	B13	TP17	N16
CP16	B13	TP18	N17
		TP25	D3
D1	N3	TP26	D3
D2	N3	TP48	D6
D3	N3	TP49	D7
D4	N4	TP55	D9
D9	N7	TP56	D9
D10	N7	TP62	D12
		TP63	D13
E1	A1	TP83	H19
E2	H1	TP84	H19
E3	M1	TP85	H17
E4	K7		
E5	A9	X1	F1
E7	G12		
E8	N11		
E9	A19		
E10	G20		
E12	N19		
RB1	N3		
RB2	N5		
RB5	C13		
RB6	D13		
RB7	C14		
RB8	E14		
RB9	A14		
RB10	D15		
RB11	F14		
RB12	A16		
RB13	B16		
RB14	D16		
RB15	E16		
RB16	A16		
RB17	B16		
RB18	B17		
RB19	D18		
RB20	D19		

IC No. on this board shows its address.

DEC-56 BOARD (1-639-119-12)

B Side

DVR-2000	DVR-2100
J ; S/N 10201 and higher	J ; S/N 10701 and higher
UC ; S/N 10201 and higher	UC ; S/N 10701 and higher
EK ; S/N 10401 and higher	EK ; S/N 10701 and higher

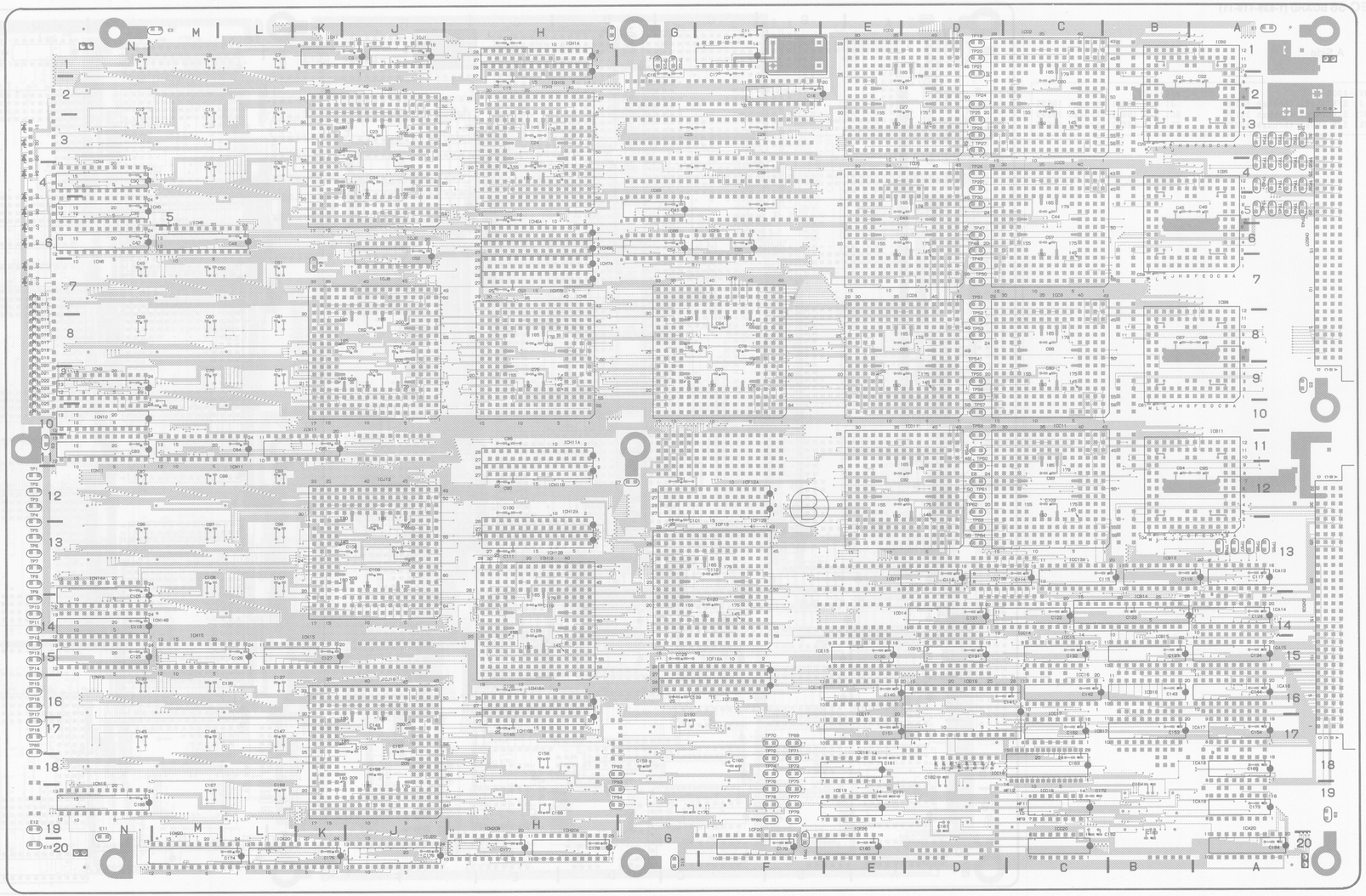

1-639-119-12 B SIDE

DEC-56 (1-639-119-12)

DVR-2000
DVR-2100

CN507	A6		
CN508	A15	TP1	N12
		TP2	N12
CP1	B1	TP3	N12
CP2	B1	TP4	N12
CP3	B3	TP5	N13
CP4	B4	TP6	N13
CP5	B5	TP7	N13
CP6	B5	TP8	N13
CP7	B7	TP9	N13
CP8	B6	TP10	N14
CP9	B8	TP11	N14
CP10	B8	TP12	N14
CP11	B10	TP13	N15
CP12	B9	TP14	N15
CP13	B12	TP15	N16
CP14	B12	TP16	N16
CP15	B13	TP17	N16
CP16	B13	TP18	N17
		TP25	D3
D1	N3	TP26	D3
D2	N3	TP48	D6
D3	N3	TP49	D7
D4	N4	TP55	D9
D9	N7	TP56	D9
D10	N7	TP62	D12
		TP63	D13
E1	A1	TP83	H19
E2	H1	TP84	H19
E3	M1	TP85	H17
E4	K7		
E5	A9	X1	F1
E7	G12		
E8	N11		
E9	A19		
E10	G20		
E12	N19		
RB1	N3		
RB2	N5		
RB5	C13		
RB6	D13		
RB7	C14		
RB8	E14		
RB9	A14		
RB10	D15		
RB11	F14		
RB12	A16		
RB13	B16		
RB14	D16		
RB15	E16		
RB16	A16		
RB17	B16		
RB18	B17		
RB19	D18		
RB20	D19		

IC No. on this board shows its address.

DEC-56 BOARD CARD RACK

DEC-56 BOARD (1-639-119-11)

B Side

DVR-2000	DVR-2100
J: S/N 10001 through 10199	J: S/N 10001 through 10699
UC: S/N 10001 through 10199	UC: S/N 10001 through 10699
EK: S/N 10001 through 10399	EK: S/N 10001 through 10699

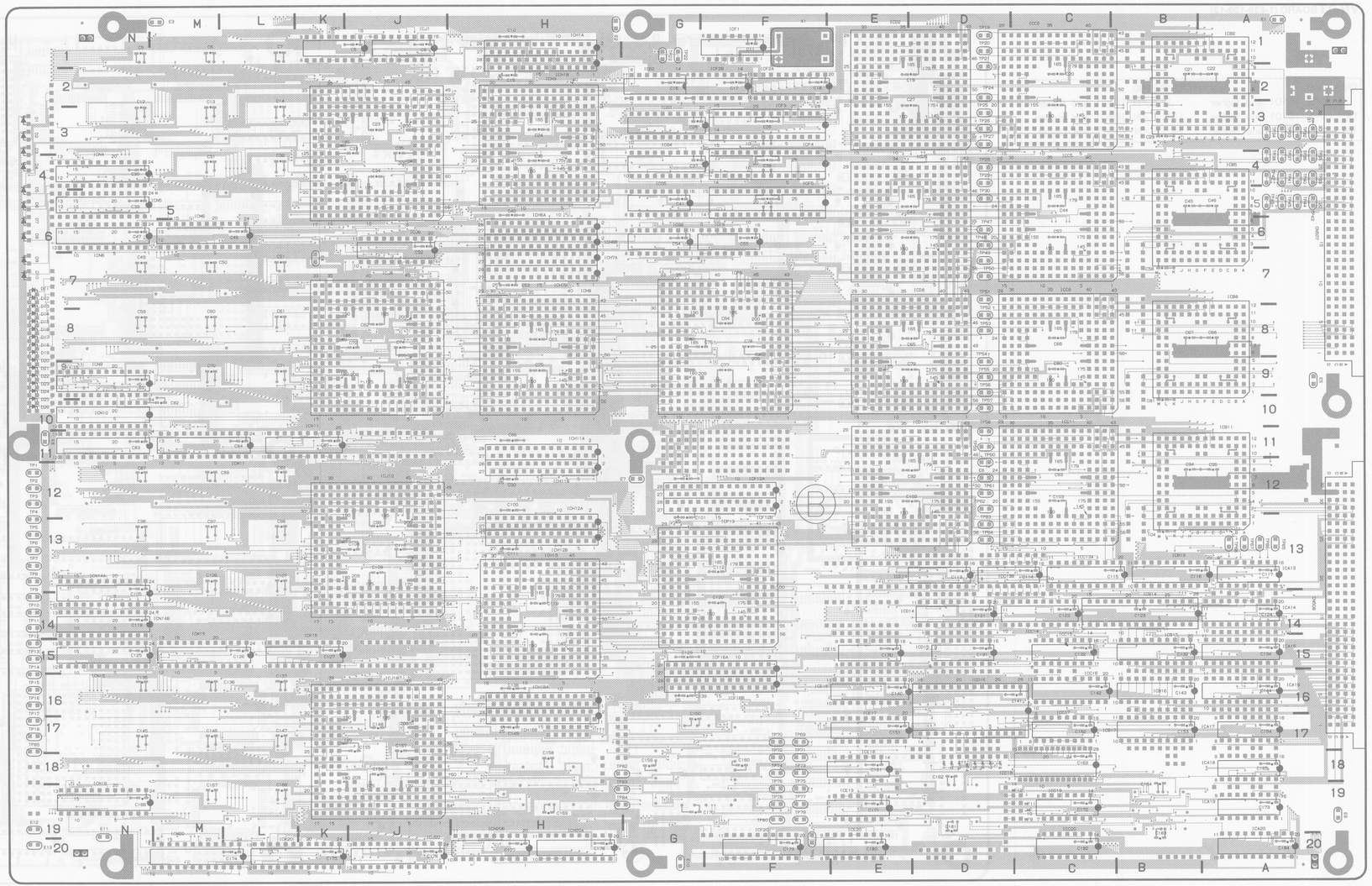

1-639-119-11 B SIDE

DEC-56 (1-639-119-11)

DVR-2000
DVR-2100

CN507	A6	RB16	A16	TP49	D7
CN508	A15	RB17	B16	TP50	D7
		RB18	B17	TP51	D7
CP1	B1	RB19	D18	TP52	D8
CP2	B1	RB20	D19	TP53	D8
CP3	B3			TP54	D8
CP4	B4	TP1	N12	TP55	D9
CP5	B5	TP2	N12	TP56	D9
CP6	B5	TP3	N12	TP57	D10
CP7	B7	TP4	N12	TP58	D10
CP8	B6	TP5	N13	TP59	D11
CP9	B8	TP6	N13	TP60	D11
CP10	B8	TP7	N13	TP61	D12
CP11	B10	TP8	N13	TP62	D12
CP12	B9	TP9	N13	TP63	D13
CP13	B12	TP10	N14	TP64	D13
CP14	B12	TP11	N14	TP65	A13
CP15	B13	TP12	N14	TP66	A13
CP16	B13	TP13	N15	TP67	A13
		TP14	N15	TP68	A13
D1	N3	TP15	N16	TP69	F17
D2	N3	TP16	N16	TP70	F17
D3	N3	TP17	N16	TP71	F17
D4	N4	TP18	N17	TP72	F17
D9	N7	TP19	D1	TP73	F18
D10	N7	TP20	D1	TP74	F18
		TP21	D1	TP75	F18
E1	A1	TP22	G1	TP76	F18
E2	H1	TP23	G1	TP77	F19
E3	M1	TP24	D2	TP78	F19
E4	K7	TP25	D3	TP79	F19
E5	A9	TP26	D3	TP80	F19
E6	D12	TP27	D3	TP81	F20
E7	G12	TP28	D4	TP82	H18
E8	N11	TP29	D4	TP83	H19
E9	A19	TP30	D5	TP84	H19
E10	G20	TP31	A3	TP85	H17
E11	N19	TP32	A3		
E12	N19	TP33	A3	X1	F1
E13	N20	TP34	A3		
		TP35	A4		
RB1	N3	TP36	A4		
RB2	N5	TP37	A4		
RB5	C13	TP38	A4		
RB6	D13	TP39	A4		
RB7	C14	TP40	A4		
RB8	E14	TP41	A4		
RB9	A14	TP42	A4		
RB10	D15	TP43	A5		
RB11	F14	TP44	A5		
RB12	A16	TP45	A5		
RB13	B16	TP46	A5		
RB14	D16	TP47	D6		
RB15	E16	TP48	D6		

IC No. on this board shows its address.

20-9 (a)

DEC-56 BOARD CARD RACK

DEC-56 BOARD (1-639-119-11)

B Side

DVR-2000	DVR-2100
J: S/N 10001 through 10199	J: S/N 10001 through 10699
UC: S/N 10001 through 10199	UC: S/N 10001 through 10699
EK: S/N 10001 through 10399	EK: S/N 10001 through 10699

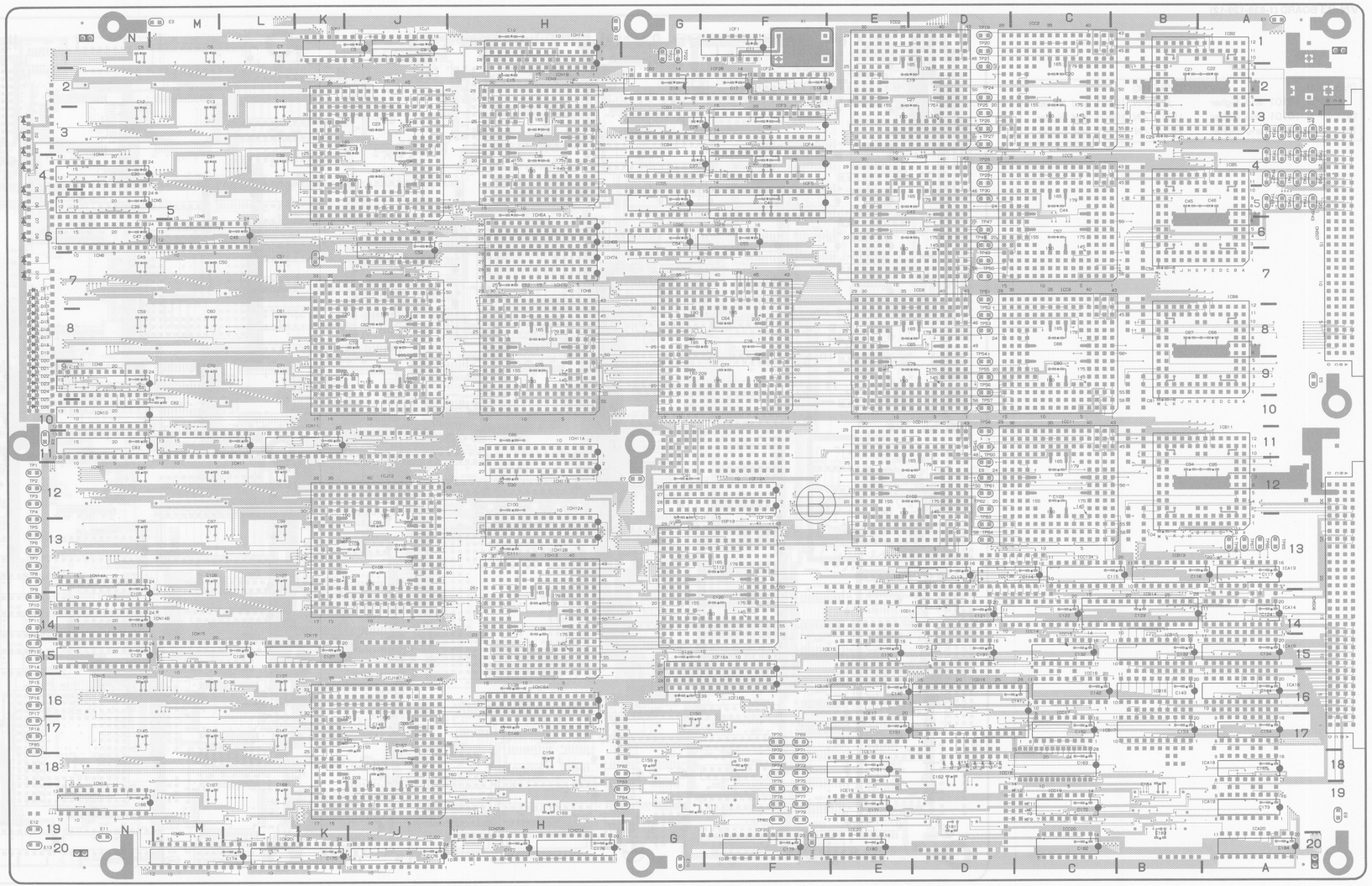

1-639-119-11 B SIDE

DEC-56 (1-639-119-11)

DVR-2000
DVR-2100

CN507	A6	RB16	A16	TP49	D7
CN508	A15	RB17	B16	TP50	D7
		RB18	B17	TP51	D7
CP1	B1	RB19	D18	TP52	D8
CP2	B1	RB20	D19	TP53	D8
CP3	B3			TP54	D8
CP4	B4	TP1	N12	TP55	D9
CP5	B5	TP2	N12	TP56	D9
CP6	B5	TP3	N12	TP57	D10
CP7	B7	TP4	N12	TP58	D10
CP8	B6	TP5	N13	TP59	D11
CP9	B8	TP6	N13	TP60	D11
CP10	B8	TP7	N13	TP61	D12
CP11	B10	TP8	N13	TP62	D12
CP12	B9	TP9	N13	TP63	D13
CP13	B12	TP10	N14	TP64	D13
CP14	B12	TP11	N14	TP65	A13
CP15	B13	TP12	N14	TP66	A13
CP16	B13	TP13	N15	TP67	A13
		TP14	N15	TP68	A13
D1	N3	TP15	N16	TP69	F17
D2	N3	TP16	N16	TP70	F17
D3	N3	TP17	N16	TP71	F17
D4	N4	TP18	N17	TP72	F17
D9	N7	TP19	D1	TP73	F18
D10	N7	TP20	D1	TP74	F18
		TP21	D1	TP75	F18
E1	A1	TP22	G1	TP76	F18
E2	H1	TP23	G1	TP77	F19
E3	M1	TP24	D2	TP78	F19
E4	K7	TP25	D3	TP79	F19
E5	A9	TP26	D3	TP80	F19
E6	D12	TP27	D3	TP81	F20
E7	G12	TP28	D4	TP82	H18
E8	N11	TP29	D4	TP83	H19
E9	A19	TP30	D5	TP84	H19
E10	G20	TP31	A3	TP85	H17
E11	N19	TP32	A3		
E12	N19	TP33	A3	X1	F1
E13	N20	TP34	A3		
		TP35	A4		
RB1	N3	TP36	A4		
RB2	N5	TP37	A4		
RB5	C13	TP38	A4		
RB6	D13	TP39	A4		
RB7	C14	TP40	A4		
RB8	E14	TP41	A4		
RB9	A14	TP42	A4		
RB10	D15	TP43	A5		
RB11	F14	TP44	A5		
RB12	A16	TP45	A5		
RB13	B16	TP46	A5		
RB14	D16	TP47	D6		
RB15	E16	TP48	D6		

IC No. on this board shows its address.

20-9 (a)

CARD RACK VN-03 BOARD

VN-03 BOARD CARD RACK

VN-03 (1-639-120-11, 12)

DVR-2000
DVR-2100

CN1	Q18	RB33	Q15	TP55	A20
CN2	Q20	RB34	Q4	TP76	Q16
CN509	A6	RB35	Q4	TP77	Q16
CN510	A18	RB36	Q12	TP78	Q15
		RB37	C25		
CP1	A13	RB38	B25	X1	P1
D1	Q4	RV1	D25		
D1	Q22				
		S1	Q22		
E1	A1				
E2	D1	TP1	H22		
E3	H1	TP2	H24		
E4	P1	TP3	D9		
E5	A12	TP4	Q6		
E6	D13	TP5	D5		
E7	H14	TP6	Q6		
E8	Q11	TP7	Q7		
E9	Q12	TP8	Q6		
E10	A25	TP9	F15		
E11	F25	TP10	G16		
E12	J25	TP11	G17		
E13	P25	TP12	Q7		
		TP16	Q8		
RB1	H24	TP23	K24		
RB2	H25	TP24	K24		
RB3	H23	TP25	K24		
RB4	J22	TP26	K20		
RB5	D6	TP27	K20		
RB6	A5	TP28	K20		
RB7	A6	TP29	P16		
RB8	A7	TP30	L24		
RB9	D14	TP31	Q5		
RB10	D15	TP32	Q5		
RB11	D17	TP33	G13		
RB12	D18	TP34	G13		
RB13	F13	TP35	H13		
RB14	A10	TP36	H13		
RB15	A12	TP37	J13		
RB16	D9	TP38	J13		
RB17	D7	TP39	J13		
RB18	A9	TP40	F13		
RB19	A21	TP41	F10		
RB20	A22	TP42	E10		
RB21	A24	TP43	E10		
RB22	A17	TP44	E10		
RB23	A18	TP45	D7		
RB24	A20	TP46	D7		
RB25	M1	TP47	M10		
RB26	M4	TP48	F1		
RB27	D3	TP49	F1		
RB28	A2	TP50	F1		
RB29	C2	TP51	F1		
RB30	Q20	TP52	F1		
RB31	P15	TP53	E4		
RB32	M14	TP54	A19		

IC No. on this board shows its address.

VN-03 BOARD (1-639-120-12)

A Side

DVR-2000	DVR-2100
J ; S/N 10101 and higher	J ; S/N 10401 and higher
UC ; S/N 10101 and higher	UC ; S/N 10401 and higher
EK ; S/N 10101 and higher	EK ; S/N 10401 and higher

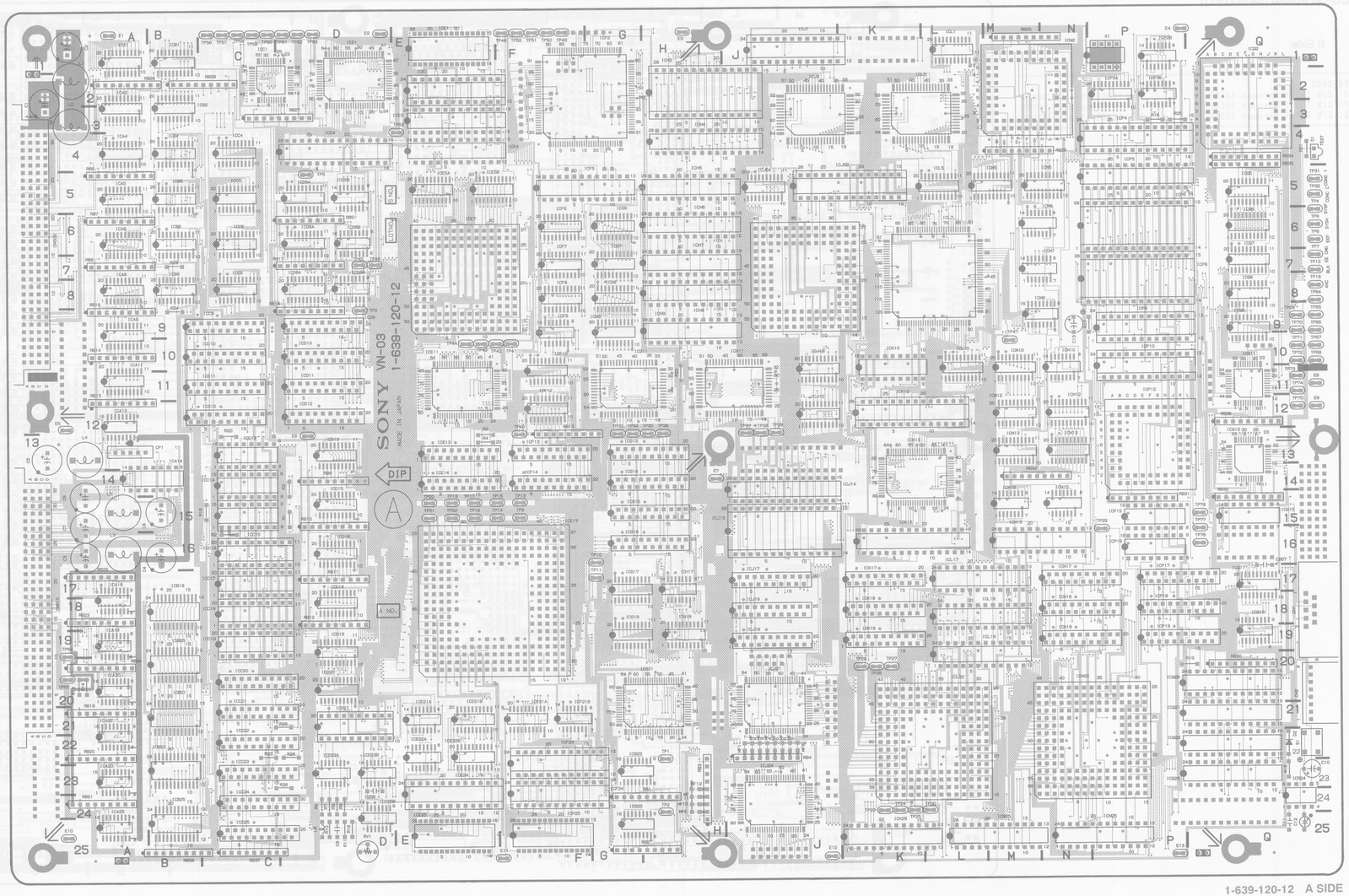

1-639-120-12 A SIDE

20-10 (b)

CARD RACK VN-03 BOARD

VN-03 BOARD (1-639-120-12)

B Side

DVR-2000	DVR-2100
J ; S/N 10101 and higher	J ; S/N 10401 and higher
UC ; S/N 10101 and higher	UC ; S/N 10401 and higher
EK ; S/N 10101 and higher	EK ; S/N 10401 and higher

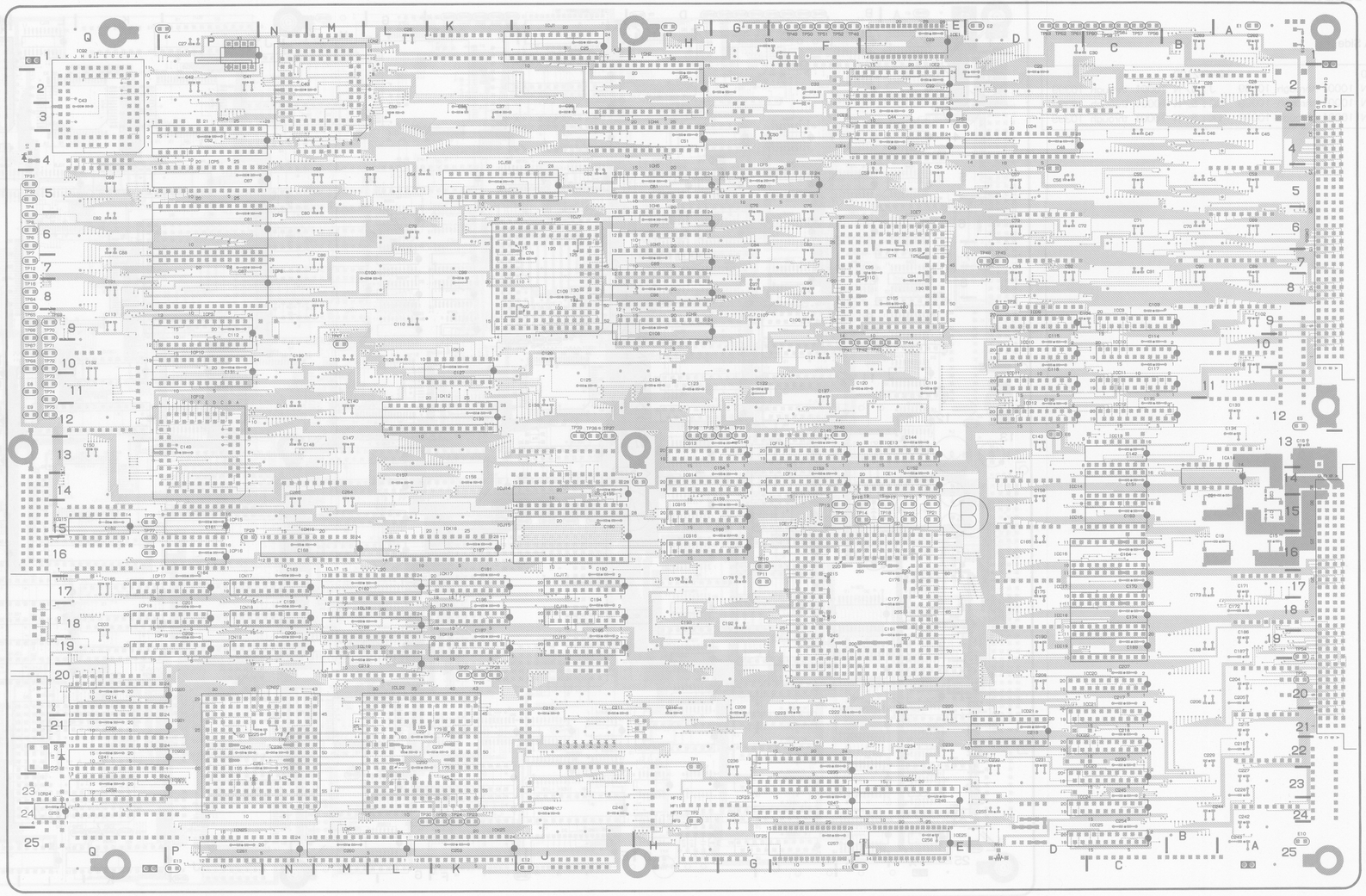

1-639-120-12 B SIDE

VN-03 (1-639-120-11, 12)

DVR-2000
DVR-2100

CN1	Q18	RB33	Q15	TP55	A20
CN2	Q20	RB34	Q4	TP76	Q16
CN509	A6	RB35	Q4	TP77	Q16
CN510	A18	RB36	Q12	TP78	Q15
		RB37	C25		
CP1	A13	RB38	B25	X1	P1
D1	Q4	RV1	D25		
D1	Q22				
		S1	Q22		
E1	A1				
E2	D1	TP1	H22		
E3	H1	TP2	H24		
E4	P1	TP3	D9		
E5	A12	TP4	Q6		
E6	D13	TP5	D5		
E7	H14	TP6	Q6		
E8	Q11	TP7	Q7		
E9	Q12	TP8	Q6		
E10	A25	TP9	F15		
E11	F25	TP10	G16		
E12	J25	TP11	G17		
E13	P25	TP12	Q7		
		TP16	Q8		
RB1	H24	TP23	K24		
RB2	H25	TP24	K24		
RB3	H23	TP25	K24		
RB4	J22	TP26	K20		
RB5	D6	TP27	K20		
RB6	A5	TP28	K20		
RB7	A6	TP29	P16		
RB8	A7	TP30	L24		
RB9	D14	TP31	Q5		
RB10	D15	TP32	Q5		
RB11	D17	TP33	G13		
RB12	D18	TP34	G13		
RB13	F13	TP35	H13		
RB14	A10	TP36	H13		
RB15	A12	TP37	J13		
RB16	D9	TP38	J13		
RB17	D7	TP39	J13		
RB18	A9	TP40	F13		
RB19	A21	TP41	F10		
RB20	A22	TP42	E10		
RB21	A24	TP43	E10		
RB22	A17	TP44	E10		
RB23	A18	TP45	D7		
RB24	A20	TP46	D7		
RB25	M1	TP47	M10		
RB26	M4	TP48	F1		
RB27	D3	TP49	F1		
RB28	A2	TP50	F1		
RB29	C2	TP51	F1		
RB30	Q20	TP52	F1		
RB31	P15	TP53	E4		
RB32	M14	TP54	A19		

IC No. on this board shows its address.

20-11 (b)

CARD RACK VN-03 BOARD

VN-03 BOARD CARD RACK

VN-03 BOARD (1-639-120-11)

VN-03 (1-639-120-11, 12)

DVR-2000
DVR-2100

CN1	Q18	RB33	Q15	TP46	D7
CN2	Q20	RB34	Q4	TP47	M10
CN509	A6	RB35	Q4	TP48	F1
CN510	A18	RB36	Q12	TP49	F1
		RB37	C25	TP50	F1
CP1	A13	RB38	B25	TP51	F1
				TP52	F1
D1	Q4	RV1	D25	TP53	E4
D1	Q22			TP54	A19
		S1	Q22	TP55	A20
E1	A1			TP56	C1
E2	D1	TP1	H22	TP57	C1
E3	H1	TP2	H24	TP58	C1
E4	P1	TP3	D9	TP59	C1
E5	A12	TP4	Q6	TP60	C1
E6	D13	TP5	D5	TP61	D1
E7	H14	TP6	Q6	TP62	D1
E8	Q11	TP7	Q7	TP63	D1
E9	Q12	TP8	Q6	TP64	Q8
E10	A25	TP9	F15	TP65	Q9
E11	F25	TP10	G16	TP66	Q9
E12	J25	TP11	G17	TP67	Q10
E13	P25	TP12	Q7	TP68	Q10
		TP13	F15	TP69	Q9
RB1	H24	TP14	E15	TP70	Q9
RB2	H25	TP15	E15	TP71	Q10
RB3	H23	TP16	Q8	TP72	Q10
RB4	J22	TP17	E15	TP73	Q11
RB5	D6	TP18	E15	TP74	Q11
RB6	A5	TP19	E15	TP75	Q12
RB7	A6	TP20	E15	TP76	Q16
RB8	A7	TP21	E15	TP77	Q16
RB9	D14	TP22	E15	TP78	Q15
RB10	D15	TP23	K24		
RB11	D17	TP24	K24	X1	P1
RB12	D18	TP25	K24		
RB13	F13	TP26	K20		
RB14	A10	TP27	K20		
RB15	A12	TP28	K20		
RB16	D9	TP29	P16		
RB17	D7	TP30	L24		
RB18	A9	TP31	Q5		
RB19	A21	TP32	Q5		
RB20	A22	TP33	G13		
RB21	A24	TP34	G13		
RB22	A17	TP35	H13		
RB23	A18	TP36	H13		
RB24	A20	TP37	J13		
RB25	M1	TP38	J13		
RB26	M4	TP39	J13		
RB27	D3	TP40	F13		
RB28	A2	TP41	F10		
RB29	C2	TP42	E10		
RB30	Q20	TP43	E10		
RB31	P15	TP44	E10		
RB32	M14	TP45	D7		

IC No. on this board shows its address.

A Side

DVR-2000	DVR-2100
J ; S/N 10001 through 10099	J ; S/N 10001 through 10399
UC ; S/N 10001 through 10099	UC ; S/N 10001 through 10399
EK ; S/N 10001 through 10399	EK ; S/N 10001 through 10399

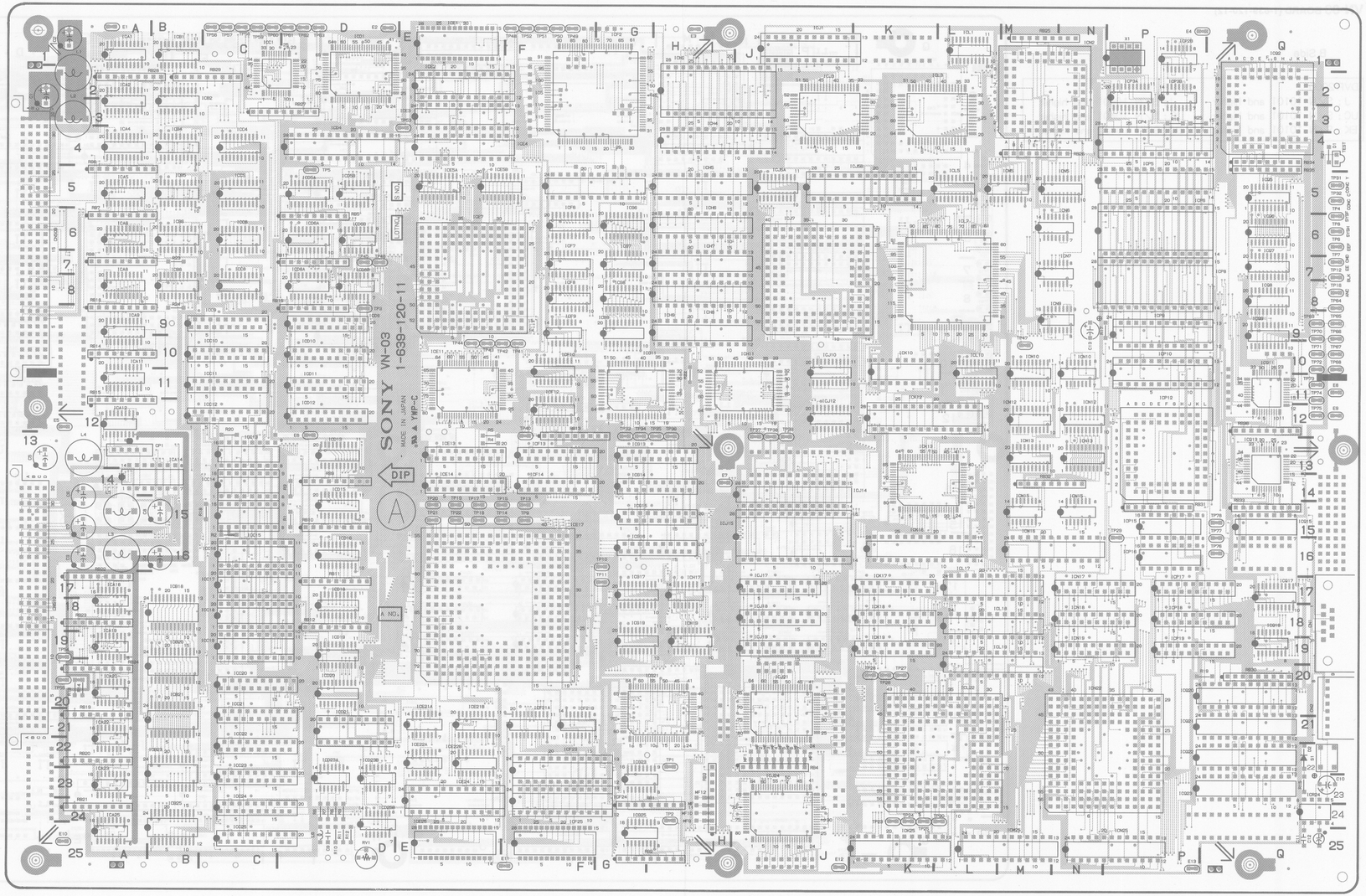

20-10 (a)

VN-03 BOARD CARD RACK

CARD RACK **VN-03 BOARD**

VN-03 BOARD (1-639-120-11)

B Side

DVR-2000	DVR-2100
J ; S/N 10001 through 10099	J ; S/N 10001 through 10399
UC ; S/N 10001 through 10099	UC ; S/N 10001 through 10399
EK ; S/N 10001 through 10099	EK ; S/N 10001 through 10399

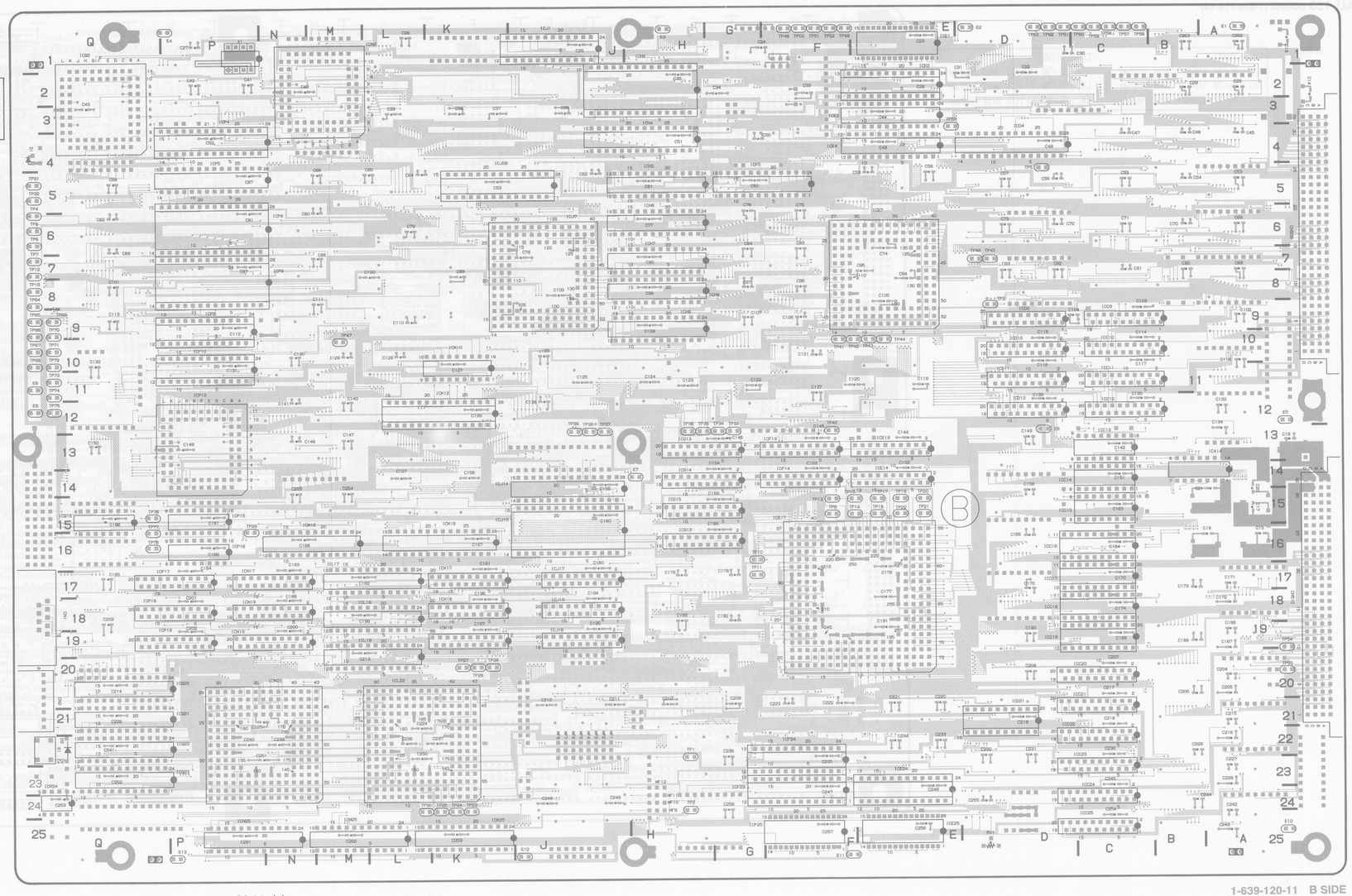

20-11 (a)

1-639-120-11 B SIDE

VN-03 (1-639-120-11, 12)

DVR-2000
DVR-2100

CN1	Q18	RB33	Q15	TP46	D7
CN2	Q20	RB34	Q4	TP47	M10
CN509	A6	RB35	Q4	TP48	F1
CN510	A18	RB36	Q12	TP49	F1
		RB37	C25	TP50	F1
CP1	A13	RB38	B25	TP51	F1
				TP52	F1
D1	Q4	RV1	D25	TP53	E4
D1	Q22			TP54	A19
		S1	Q22	TP55	A20
E1	A1			TP56	C1
E2	D1	TP1	H22	TP57	C1
E3	H1	TP2	H24	TP58	C1
E4	P1	TP3	D9	TP59	C1
E5	A12	TP4	Q6	TP60	C1
E6	D13	TP5	D5	TP61	D1
E7	H14	TP6	Q6	TP62	D1
E8	Q11	TP7	Q7	TP63	D1
E9	Q12	TP8	Q6	TP64	Q8
E10	A25	TP9	F15	TP65	Q9
E11	F25	TP10	G16	TP66	Q9
E12	J25	TP11	G17	TP67	Q10
E13	P25	TP12	Q7	TP68	Q10
		TP13	F15	TP69	Q9
RB1	H24	TP14	E15	TP70	Q9
RB2	H25	TP15	E15	TP71	Q10
RB3	H23	TP16	Q8	TP72	Q10
RB4	J22	TP17	E15	TP73	Q11
RB5	D6	TP18	E15	TP74	Q11
RB6	A5	TP19	E15	TP75	Q12
RB7	A6	TP20	E15	TP76	Q16
RB8	A7	TP21	E15	TP77	Q16
RB9	D14	TP22	E15	TP78	Q15
RB10	D15	TP23	K24		
RB11	D17	TP24	K24	X1	P1
RB12	D18	TP25	K24		
RB13	F13	TP26	K20		
RB14	A10	TP27	K20		
RB15	A12	TP28	K20		
RB16	D9	TP29	P16		
RB17	D7	TP30	L24		
RB18	A9	TP31	Q5		
RB19	A21	TP32	Q5		
RB20	A22	TP33	G13		
RB21	A24	TP34	G13		
RB22	A17	TP35	H13		
RB23	A18	TP36	H13		
RB24	A20	TP37	J13		
RB25	M1	TP38	J13		
RB26	M4	TP39	J13		
RB27	D3	TP40	F13		
RB28	A2	TP41	F10		
RB29	C2	TP42	E10		
RB30	Q20	TP43	E10		
RB31	P15	TP44	E10		
RB32	M14	TP45	D7		

IC No. on this board shows its address.

20-11 (a)

AU-133 BOARD CARD RACK

AU-133 BOARD (1-639-118-13)

AU-133 (1-639-118-13)

DVR-2000
DVR-2100

CN1	D11	RB16	C17
CN2	D11		
CN3	A19	TP1	R5
CN4	A19	TP2	R5
CN505	A2	TP3	R6
CN506	A11	TP4	R6
		TP5	R7
D1	R5	TP6	R7
D2	R4	TP7	R7
D3	R4	TP8	R8
D4	R4	TP9	R8
D5	R3	TP10	R9
D6	R3	TP11	R12
		TP12	R12
E1	A3	TP13	R12
E2	A11	TP15	R12
E3	A19	TP16	R15
E4	G10	TP17	P16
E5	K1	TP18	P6
E6	J10	TP19	P11
E7	K19	TP24	G3
E8	L6	TP37	D13
E9	R1	TP38	H16
E10	P15	TP42	M14
E11	R19	TP43	P17
E12	R11	TP44	P15
E13	R11	TP45	P15
		TP53	L7
MF1	M2	TP54	M6
MF2	M2	TP58	M15
MF3	M2	TP60	K15
MF4	M2		
MF5	M2	X1	F1
MF6	M2		
MF7	M2		
MF8	M2		
MF9	L2		
MF10	L2		
MF11	L2		
MF12	L2		
RB1	C12		
RB2	B8		
RB3	B14		
RB4	C15		
RB5	C15		
RB6	C13		
RB7	C13		
RB8	R2		
RB9	B7		
RB10	B5		
RB11	B4		
RB12	B2		
RB13	M2		
RB14	L3		
RB15	B6		

IC No. on this board shows its address.

A Side

DVR-2000	DVR-2100
J ; S/N 10201 and higher	J ; S/N 10801 and higher
UC ; S/N 10401 and higher	UC ; S/N 11101 and higher
EK ; S/N 10801 and higher	EK ; S/N 11101 and higher

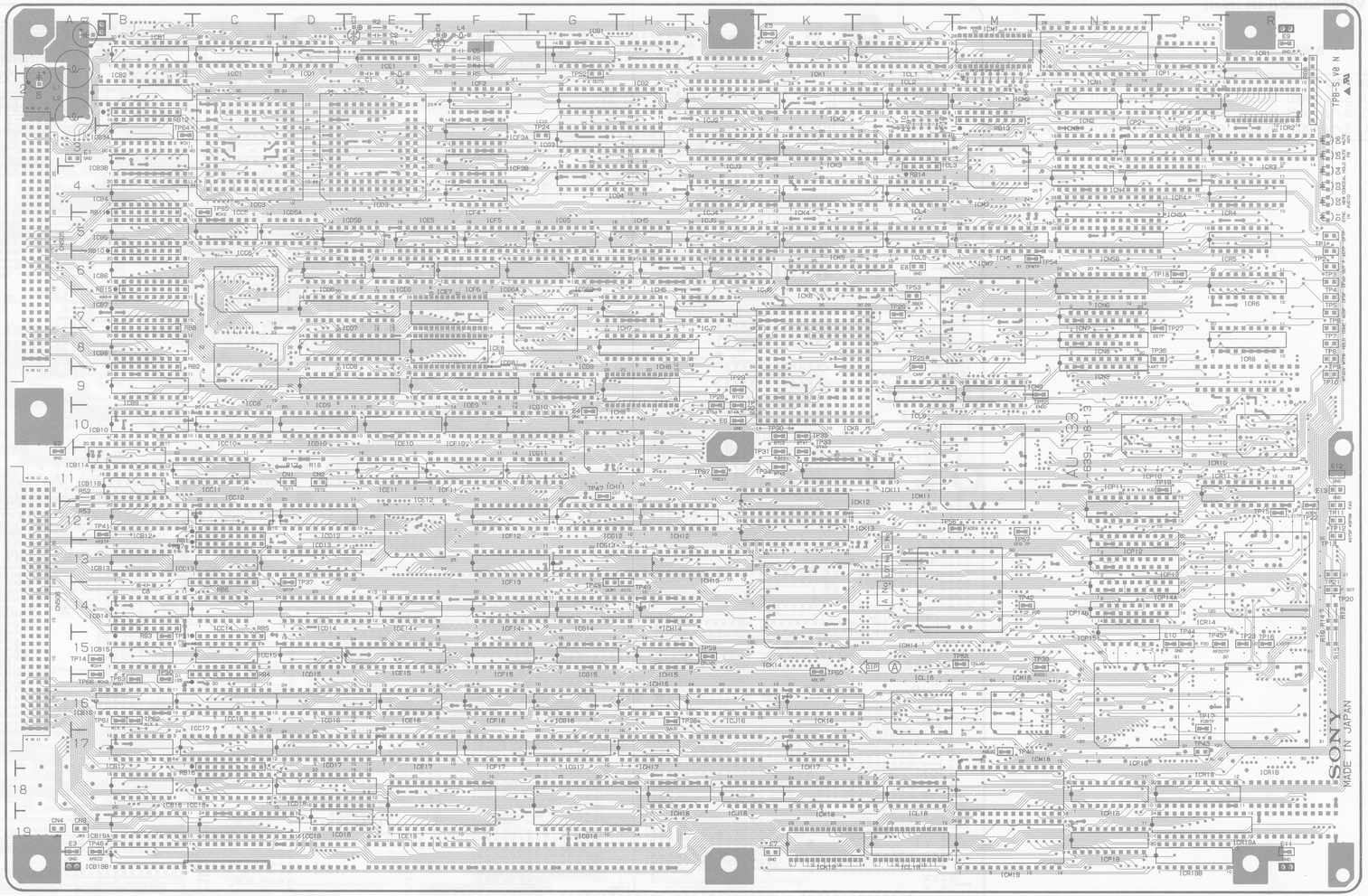

1-639-118-13 A SIDE

AU-133 BOARD CARD RACK

CARD RACK **AU-133 BOARD**

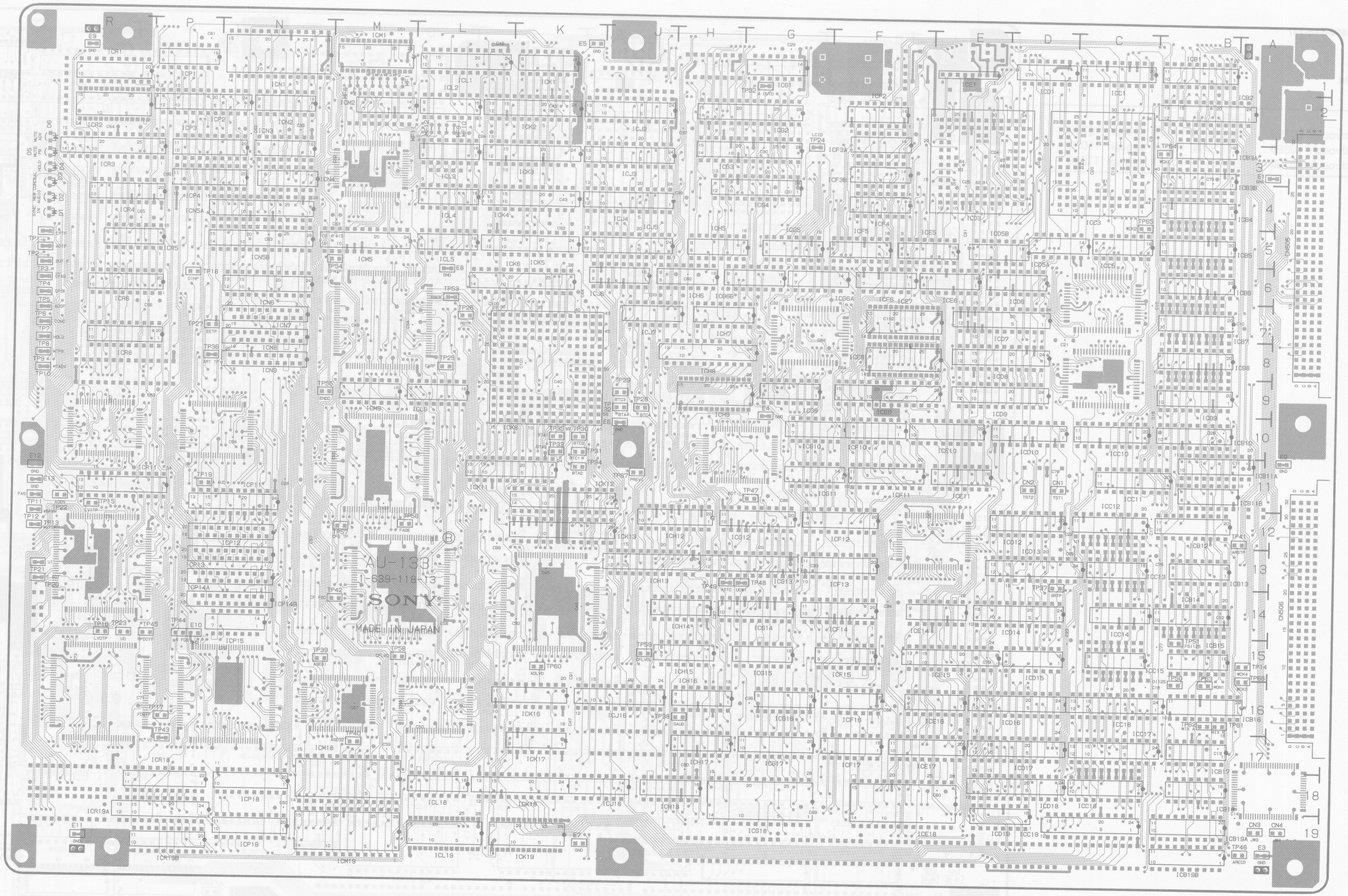

1-639-118-13 B SIDE

AU-133 (1-639-118-13)

DVR-2000
DVR-2100

CN1	D11	RB16	C17
CN2	D11		
CN3	A19	TP1	R5
CN4	A19	TP2	R5
CN505	A2	TP3	R6
CN506	A11	TP4	R6
		TP5	R7
D1	R5	TP6	R7
D2	R4	TP7	R7
D3	R4	TP8	R8
D4	R4	TP9	R8
D5	R3	TP10	R9
D6	R3	TP11	R12
		TP12	R12
E1	A3	TP13	R12
E2	A11	TP15	R12
E3	A19	TP16	R15
E4	G10	TP17	P16
E5	K1	TP18	P6
E6	J10	TP19	P11
E7	K19	TP24	G3
E8	L6	TP37	D13
E9	R1	TP38	H16
E10	P15	TP42	M14
E11	R19	TP43	P17
E12	R11	TP44	P15
E13	R11	TP45	P15
		TP53	L7
MF1	M2	TP54	M6
MF2	M2	TP58	M15
MF3	M2	TP60	K15
MF4	M2		
MF5	M2	X1	F1
MF6	M2		
MF7	M2		
MF8	M2		
MF9	L2		
MF10	L2		
MF11	L2		
MF12	L2		
RB1	C12		
RB2	B8		
RB3	B14		
RB4	C15		
RB5	C15		
RB6	C13		
RB7	C13		
RB8	R2		
RB9	B7		
RB10	B5		
RB11	B4		
RB12	B2		
RB13	M2		
RB14	L3		
RB15	B6		

IC No. on this board shows its address.

20-13 (c)

CARD RACK **AU-133 BOARD**

AU-133 BOARD (1-639-118-13)

B Side

DVR-2000	DVR-2100
J ; S/N 10201 and higher	J ; S/N 10801 and higher
UC ; S/N 10401 and higher	UC ; S/N 11101 and higher
EK ; S/N 10801 and higher	EK ; S/N 11101 and higher

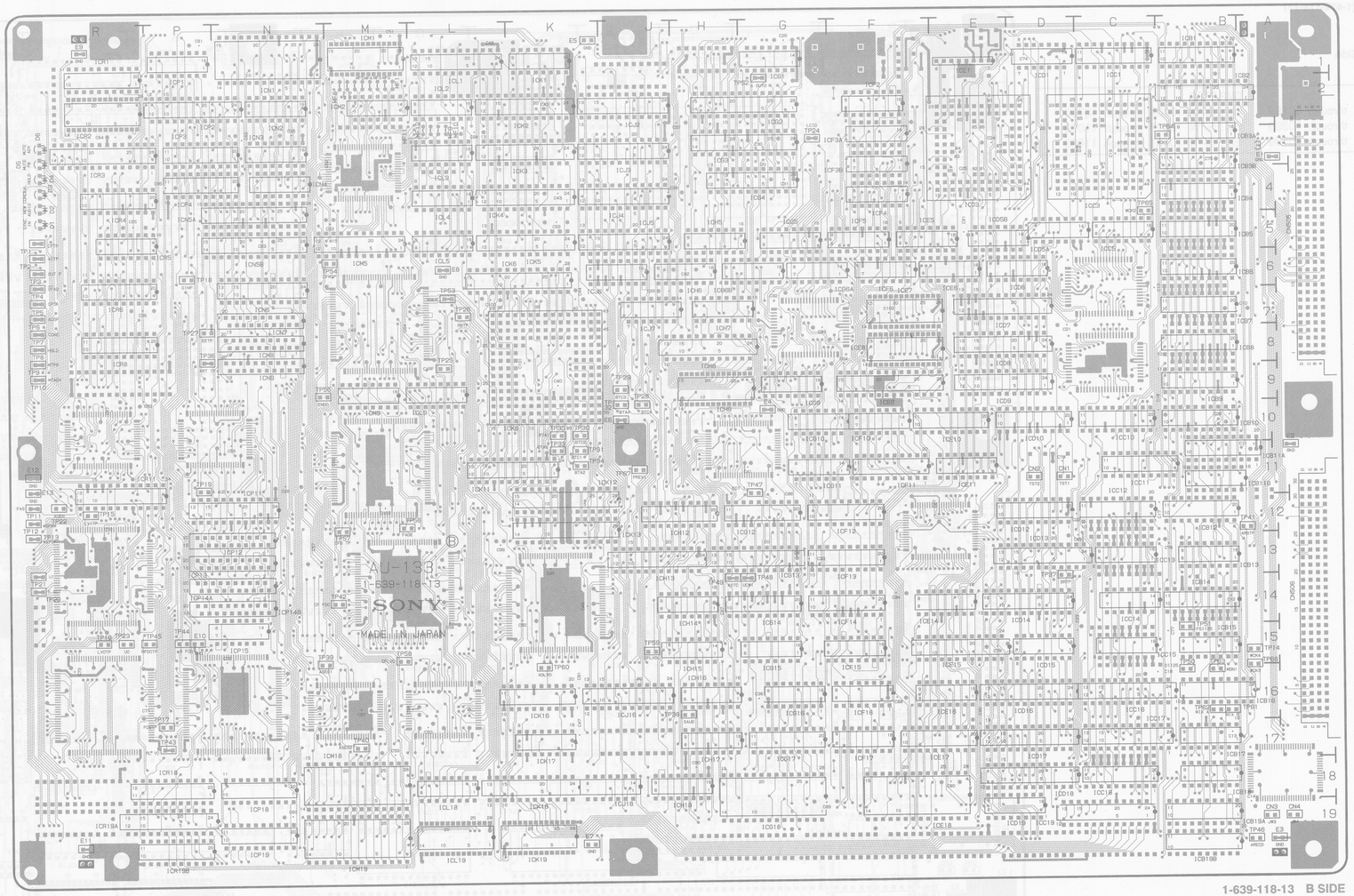

1-639-118-13 B SIDE

AU-133 (1-639-118-13)

DVR-2000
DVR-2100

CN1	D11	RB16	C17
CN2	D11		
CN3	A19	TP1	R5
CN4	A19	TP2	R5
CN505	A2	TP3	R6
CN506	A11	TP4	R6
		TP5	R7
D1	R5	TP6	R7
D2	R4	TP7	R7
D3	R4	TP8	R8
D4	R4	TP9	R8
D5	R3	TP10	R9
D6	R3	TP11	R12
		TP12	R12
E1	A3	TP13	R12
E2	A11	TP15	R12
E3	A19	TP16	R15
E4	G10	TP17	P16
E5	K1	TP18	P6
E6	J10	TP19	P11
E7	K19	TP24	G3
E8	L6	TP37	D13
E9	R1	TP38	H16
E10	P15	TP42	M14
E11	R19	TP43	P17
E12	R11	TP44	P15
E13	R11	TP45	P15
		TP53	L7
MF1	M2	TP54	M6
MF2	M2	TP58	M15
MF3	M2	TP60	K15
MF4	M2		
MF5	M2	X1	F1
MF6	M2		
MF7	M2		
MF8	M2		
MF9	L2		
MF10	L2		
MF11	L2		
MF12	L2		
RB1	C12		
RB2	B8		
RB3	B14		
RB4	C15		
RB5	C15		
RB6	C13		
RB7	C13		
RB8	R2		
RB9	B7		
RB10	B5		
RB11	B4		
RB12	B2		
RB13	M2		
RB14	L3		
RB15	B6		

IC No. on this board shows its address.

20-13 (c)

CARD RACK AU-133 BOARD AU-133 BOARD CARD RACK

AU-133 BOARD (1-639-118-12)

AU-133 (1-639-118-12)

DVR-2000
DVR-2100

CN505	A5	TP17	P16
CN506	A14	TP18	P6
		TP19	P11
D1	R3	TP20	R14
D2	R3	TP21	R13
D3	R2	TP22	R12
D4	R2	TP23	R11
D5	R2	TP24	R14
D6	R2	TP25	L8
		TP26	L7
E1	A3	TP27	P8
E2	A10	TP28	J9
E3	A19	TP29	J9
E4	G10	TP30	K10
E5	K1	TP31	K11
E6	J10	TP32	J10
E7	K19	TP33	K11
E8	L9	TP34	K11
E9	R2	TP35	K10
E10	P15	TP36	P8
E11	R19	TP37	D14
E12	R11	TP38	J16
E13	R11	TP39	M15
		TP40	M17
RB1	C12	TP41	A12
RB2	C9	TP42	M14
RB3	B15	TP43	P17
RB4	C16	TP44	P15
RB5	C14	TP45	P15
RB6	C14	TP46	A19
RB7	C13	TP47	G11
RB8	R1	TP48	G14
RB9	B8	TP49	H14
RB10	A5	TP50	B15
RB11	A4	TP51	B15
RB12	B2	TP52	G2
RB13	M3	TP53	L6
RB14	L4	TP54	L9
RB15	A6	TP55	M9
		TP56	L12
TP1	R4	TP57	M13
TP2	R4	TP58	M15
TP3	R5	TP59	J15
TP4	R5	TP60	K15
TP5	R5	TP61	A16
TP6	R6	TP62	B16
TP7	R6	TP63	B16
TP8	R7	TP64	B3
TP9	R7	TP65	C4
TP10	R8	TP66	A16
TP11	R8	TP67	J11
TP12	R8		
TP13	R9	X1	F2
TP14	A15		
TP15	R12		
TP16	R15		

IC No. on this board shows its address.

A Side

DVR-2000	DVR-2100
J ; S/N 10101 through 10199	J ; S/N 10401 through 10799
UC ; S/N 10101 through 10399	UC ; S/N 10401 through 11099
EK ; S/N 10101 through 10799	EK ; S/N 10401 through 11099

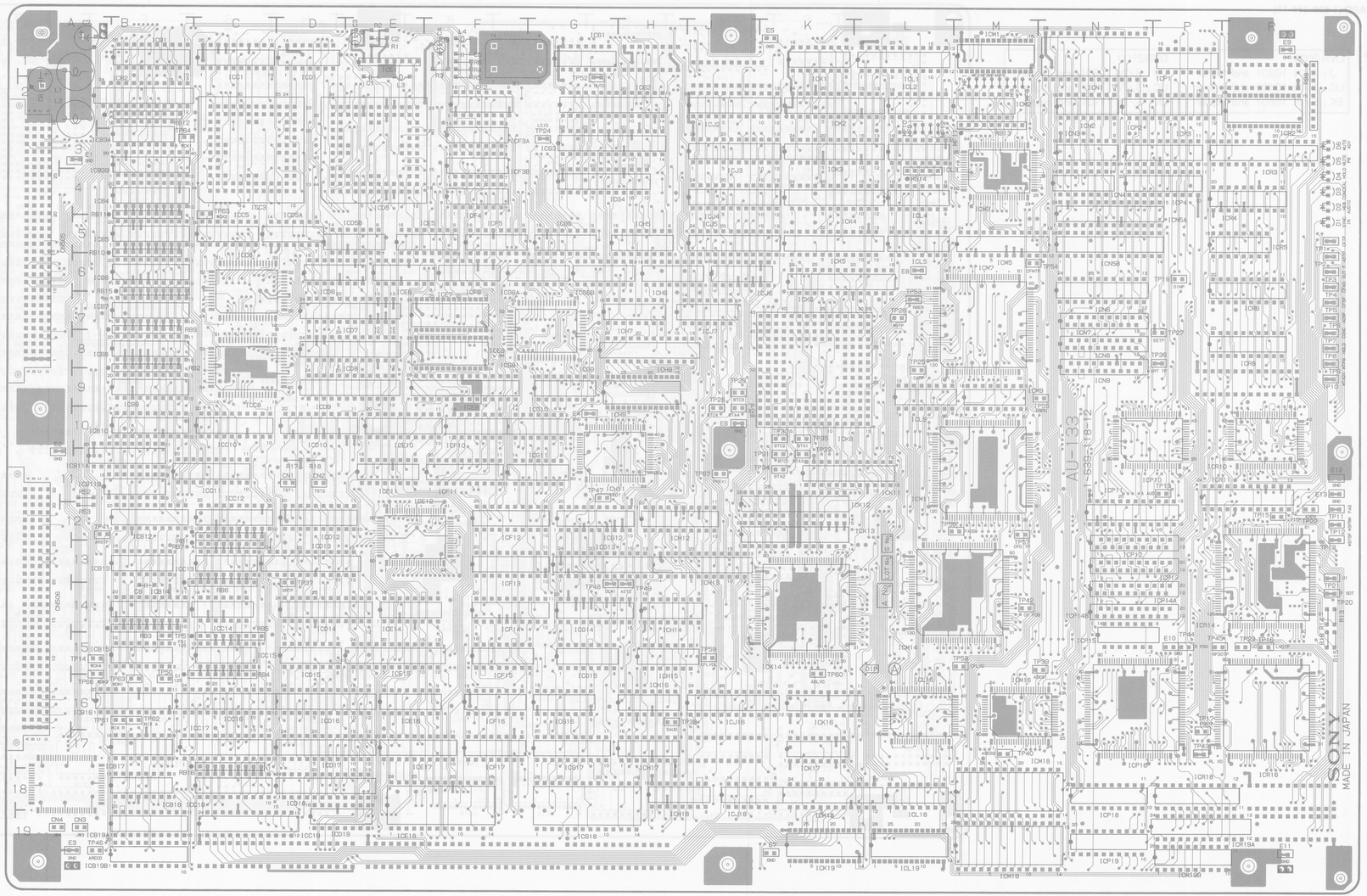

AU-133 BOARD CARD RACK

CARD RACK **AU-133 BOARD**

AU-133 BOARD (1-639-118-12)

B Side

DVR-2000	DVR-2100
J ; S/N 10101 through 10199	J ; S/N 10401 through 10799
UC ; S/N 10101 through 10399	UC ; S/N 10401 through 11099
EK ; S/N 10101 through 10799	EK ; S/N 10401 through 11099

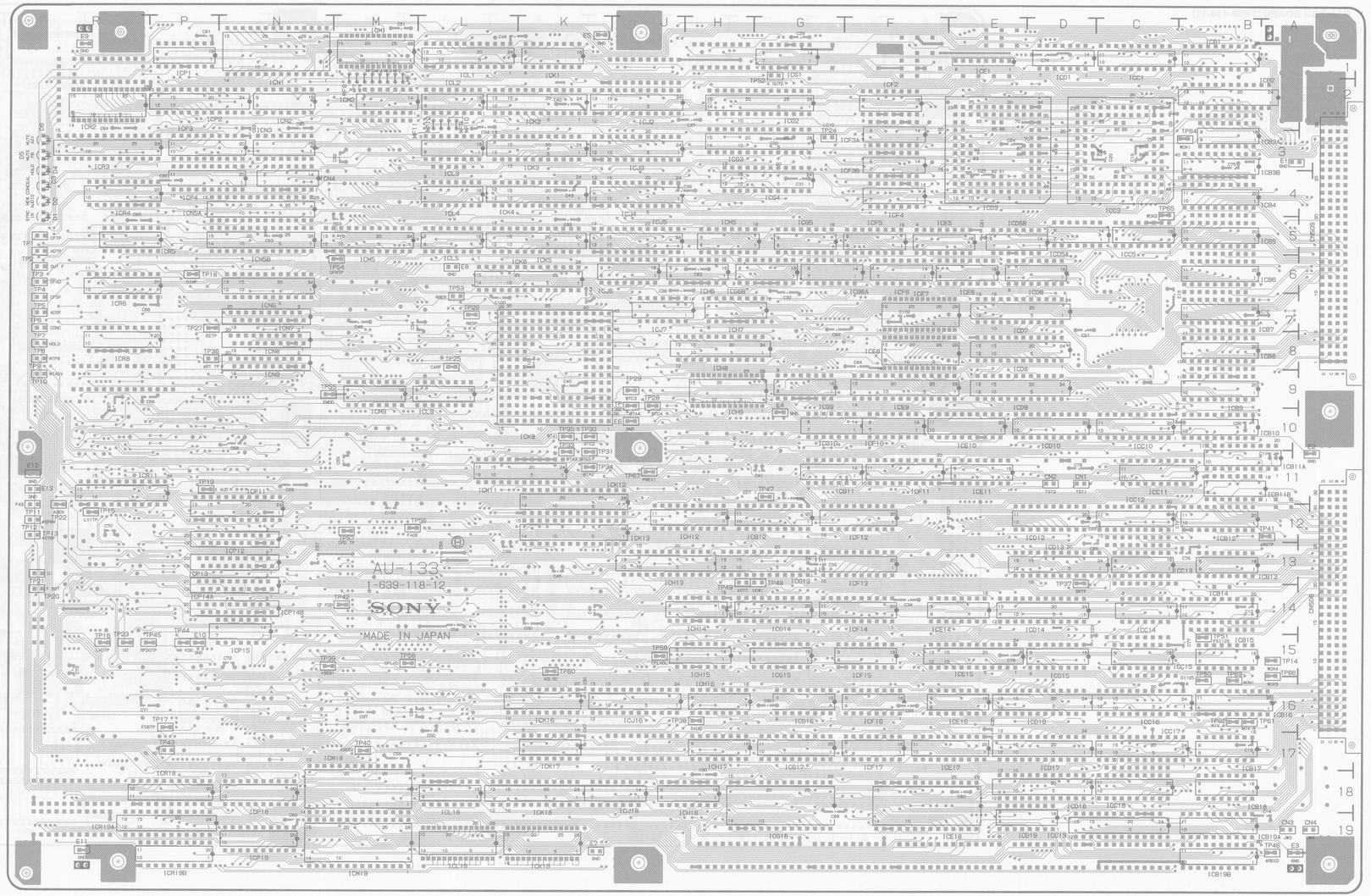

1-639-118-12 B SIDE

AU-133 (1-639-118-12)

DVR-2000
DVR-2100

CN505	A5	TP17	P16
CN506	A14	TP18	P6
		TP19	P11
D1	R3	TP20	R14
D2	R3	TP21	R13
D3	R2	TP22	R12
D4	R2	TP23	R11
D5	R2	TP24	R14
D6	R2	TP25	L8
		TP26	L7
E1	A3	TP27	P8
E2	A10	TP28	J9
E3	A19	TP29	J9
E4	G10	TP30	K10
E5	K1	TP31	K11
E6	J10	TP32	J10
E7	K19	TP33	K11
E8	L9	TP34	K11
E9	R2	TP35	K10
E10	P15	TP36	P8
E11	R19	TP37	D14
E12	R11	TP38	J16
E13	R11	TP39	M15
		TP40	M17
RB1	C12	TP41	A12
RB2	C9	TP42	M14
RB3	B15	TP43	P17
RB4	C16	TP44	P15
RB5	C14	TP45	P15
RB6	C14	TP46	A19
RB7	C13	TP47	G11
RB8	R1	TP48	G14
RB9	B8	TP49	H14
RB10	A5	TP50	B15
RB11	A4	TP51	B15
RB12	B2	TP52	G2
RB13	M3	TP53	L6
RB14	L4	TP54	L9
RB15	A6	TP55	M9
		TP56	L12
TP1	R4	TP57	M13
TP2	R4	TP58	M15
TP3	R5	TP59	J15
TP4	R5	TP60	K15
TP5	R5	TP61	A16
TP6	R6	TP62	B16
TP7	R6	TP63	B16
TP8	R7	TP64	B3
TP9	R7	TP65	C4
TP10	R8	TP66	A16
TP11	R8	TP67	J11
TP12	R8		
TP13	R9	X1	F2
TP14	A15		
TP15	R12		
TP16	R15		

IC No. on this board shows its address.

20-13 (b)

CARD RACK AU-133 BOARD AU-133 BOARD CARD RACK

AU-133 (1-639-118-11)

DVR-2000
DVR-2100

CN505	A5	TP15	R12	X1	F2
CN506	A14	TP16	R15		
		TP17	P16		
D1	R3	TP18	P6		
D2	R3	TP19	P11		
D3	R2	TP20	R14		
D4	R2	TP21	R13		
D5	R2	TP22	R12		
D6	R2	TP23	R11		
		TP24	R14		
E1	A3	TP25	L8		
E2	A10	TP26	L7		
E3	A19	TP27	P8		
E4	G10	TP28	J9		
E5	K1	TP29	J9		
E6	J10	TP30	K10		
E7	K19	TP31	K11		
E8	L9	TP32	J10		
E9	R2	TP33	K11		
E10	P15	TP34	K11		
E11	R19	TP35	K10		
E12	R11	TP36	P8		
E13	R11	TP37	D14		
		TP38	J16		
RB1	C12	TP39	M15		
RB2	C9	TP40	M17		
RB3	B15	TP41	A12		
RB4	C16	TP42	M14		
RB5	C14	TP43	P17		
RB6	C14	TP44	P15		
RB7	C13	TP45	P15		
RB8	R1	TP46	A19		
RB9	B8	TP47	G11		
RB10	A5	TP48	G14		
RB11	A4	TP49	H14		
RB12	B2	TP50	B15		
RB13	M3	TP51	B15		
RB14	L4	TP52	G2		
RB15	A6	TP53	L6		
		TP54	L9		
TP1	R4	TP55	M9		
TP2	R4	TP56	L12		
TP3	R5	TP57	M13		
TP4	R5	TP58	M15		
TP5	R5	TP59	J15		
TP6	R6	TP60	K15		
TP7	R6	TP61	A16		
TP8	R7	TP62	B16		
TP9	R7	TP63	B16		
TP10	R8	TP64	B3		
TP11	R8	TP65	C4		
TP12	R8	TP66	A16		
TP13	R9	TP67	J11		
TP14	A15				

IC No. on this board shows its address.

AU-133 BOARD (1-639-118-11)

A Side

DVR-2000	DVR-2100
J: S/N 10001 through 10099	J: S/N 10001 through 10399
UC: S/N 10001 through 10099	UC: S/N 10001 through 10399
EK: S/N 10001 through 10099	EK: S/N 10001 through 10399

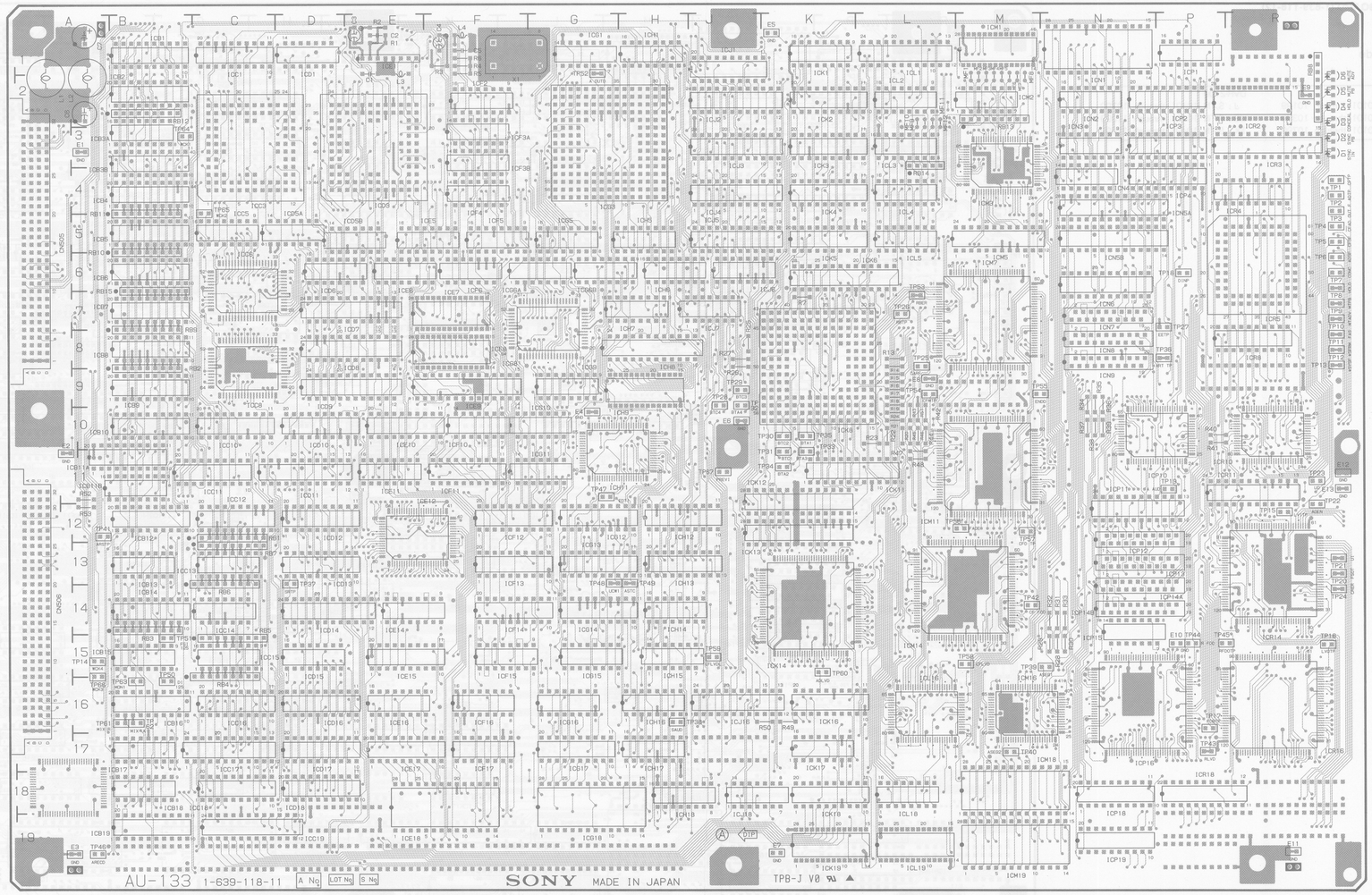

1-639-118-11 A SIDE

20-12 (a)

AU-133 BOARD (1-639-118-11)

B Side

DVR-2000	DVR-2100
J: S/N 10001 through 10099	J: S/N 10001 through 10399
UC: S/N 10001 through 10099	UC: S/N 10001 through 10399
EK: S/N 10001 through 10099	EK: S/N 10001 through 10399

CARD RACK **AU-133 BOARD** **AU-133 BOARD** CARD RACK

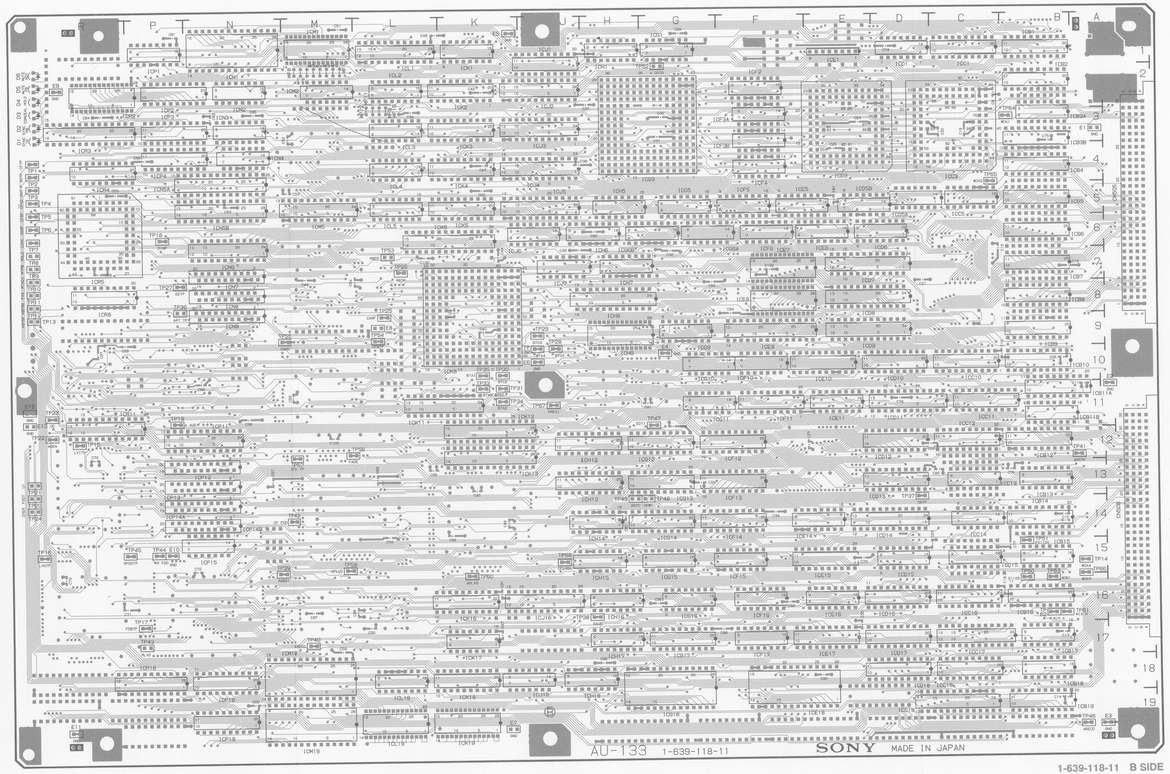

1-639-118-11 B SIDE

AU-133 (1-639-118-11)

DVR-2000
DVR-2100

CN505	A5	TP15	R12	X1	F2
CN506	A14	TP16	R15		
		TP17	P16		
D1	R3	TP18	P6		
D2	R3	TP19	P11		
D3	R2	TP20	R14		
D4	R2	TP21	R13		
D5	R2	TP22	R12		
D6	R2	TP23	R11		
		TP24	R14		
E1	A3	TP25	L8		
E2	A10	TP26	L7		
E3	A19	TP27	P8		
E4	G10	TP28	J9		
E5	K1	TP29	J9		
E6	J10	TP30	K10		
E7	K19	TP31	K11		
E8	L9	TP32	J10		
E9	R2	TP33	K11		
E10	P15	TP34	K11		
E11	R19	TP35	K10		
E12	R11	TP36	P8		
E13	R11	TP37	D14		
		TP38	J16		
RB1	C12	TP39	M15		
RB2	C9	TP40	M17		
RB3	B15	TP41	A12		
RB4	C16	TP42	M14		
RB5	C14	TP43	P17		
RB6	C14	TP44	P15		
RB7	C13	TP45	P15		
RB8	R1	TP46	A19		
RB9	B8	TP47	G11		
RB10	A5	TP48	G14		
RB11	A4	TP49	H14		
RB12	B2	TP50	B15		
RB13	M3	TP51	B15		
RB14	L4	TP52	G2		
RB15	A6	TP53	L6		
		TP54	L9		
TP1	R4	TP55	M9		
TP2	R4	TP56	L12		
TP3	R5	TP57	M13		
TP4	R5	TP58	M15		
TP5	R5	TP59	J15		
TP6	R6	TP60	K15		
TP7	R6	TP61	A16		
TP8	R7	TP62	B16		
TP9	R7	TP63	B16		
TP10	R8	TP64	B3		
TP11	R8	TP65	C4		
TP12	R8	TP66	A16		
TP13	R9	TP67	J11		
TP14	A15				

IC No. on this board shows its address.

AE-12 BOARD (1-639-123-13)

DVR-2000	DVR-2100
J ; S/N 10201 and higher	J ; S/N 10801 and higher
UC ; S/N 10301 and higher	UC ; S/N 11101 and higher
EK ; S/N 10601 and higher	EK ; S/N 11101 and higher

A Side

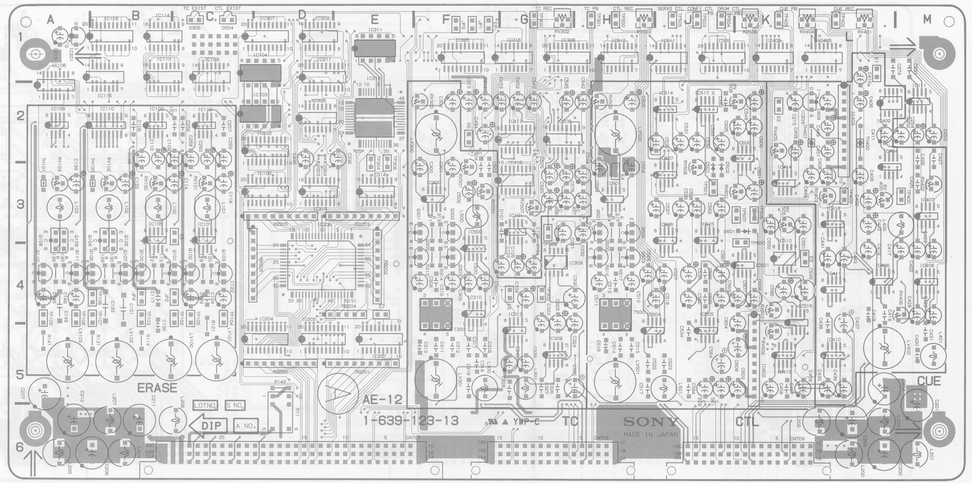

1-639-123-13 A SIDE

B Side

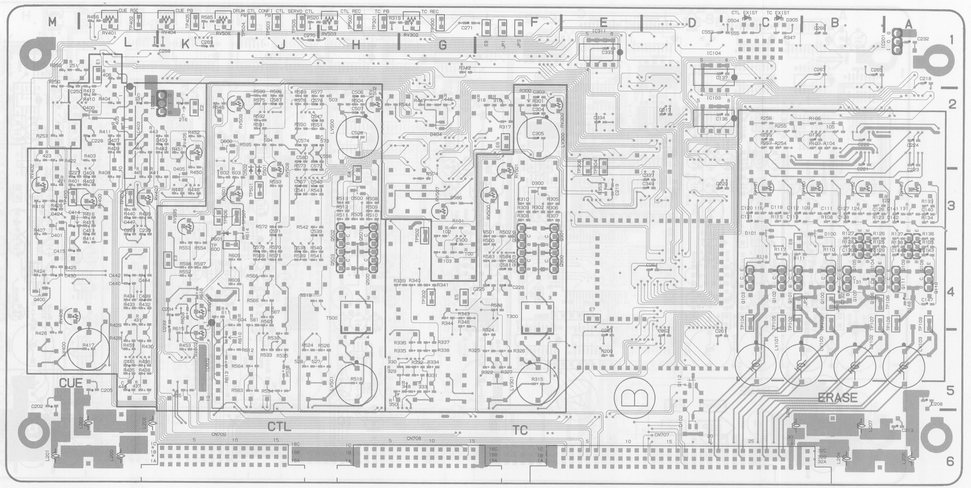

1-639-123-13 B SIDE

AE-12 (1-639-123-13)

DVR-2000
DVR-2100

CN707	D6	IC211	D1	LV101	C5	RV503	H1
CN708	G6	IC300	F3	LV102	B5	RV505	K3
CN709	K6	IC303	D2	LV103	A5	RV506	K1
		IC304	D1	LV300	F2	RV507	G3
D100	*B3	IC305	F1	LV301	F5	RV508	J3
D101	*C3	IC306	G1	LV400	L5	RV509	K2
D102	*D6	IC307	D1	LV500	H2	RV601	K3
D300	*F3	IC308	G5	LV501	H5	RV602	K5
D303	D2	IC309	G4			RV603	K4
D304	D2	IC310	F4	Q100	B4		
D305	C1	IC311	E1	Q101	C4	RY1	D6
D400	*L2	IC312	E2	Q102	C4		
D401	*M3	IC313	G5	Q103	C4	T300	F4
D404	*G2	IC314	E3	Q104	B3	T500	H4
D405	*K3	IC315	D3	Q105	B3		
D500	*H3	IC316	G1	Q106	B4	TH100	B3
D501	J3	IC402	L2	Q107	B4	TH101	A3
D502	J3	IC403	L2	Q108	A3	TH400	L2
D504	C1	IC404	L3	Q109	A3	TH401	K2
D600	*K2	IC405	L1	Q110	A4		
D601	K3	IC406	L4	Q111	A4	TP102	C4
		IC407	M3	Q112	*D5	TP103	B4
E1	L1	IC408	M4	Q300	F4	TP104	C4
E2	K2	IC409	K1	Q301	F3	TP105	C4
E3	K4	IC410	L5	Q302	F3	TP106	B4
E4	H3	IC411	L4	Q303	F4	TP107	B4
E5	G4	IC412	L3	Q400	*M4	TP108	A4
E6	F2	IC413	G2	Q500	H4	TP109	A4
E7	E4	IC414	K3	Q501	H3	TP300	G1
E8	C3	IC415	K5	Q502	H3	TP301	H1
E9	F1	IC416	G3	Q503	H4	TP302	G4
		IC500	F4			TP400	M3
IC100	D3	IC501	H3	RB200	D5	TP402	L1
IC101	G3	IC504	H5	RB201	E5	TP403	L3
IC102	B2	IC505	J5	RB202	E4	TP405	K1
IC103	D2	IC506	J3	RB203	E3	TP500	H1
IC104	D1	IC507	J3	RB204	E4	TP501	J3
IC105	B3	IC508	G2	RB205	D3	TP502	G3
IC106	A2	IC509	J1	RB206	D4	TP503	J1
IC107	C3	IC510	K4			TP504	J1
IC108	A2	IC511	J1	RV100	B3	TP505	J1
IC109	C1	IC512	H1	RV101	C3	TP506	K3
IC110	B2	IC514	J2	RV102	B3	TP507	K3
IC111	M2	IC515	J3	RV103	A3	TP600	K4
IC112	C2	IC516	K5	RV300	F2		
IC113	B1	IC517	J2	RV302	G1	* : B SIDE	
IC114	B1	IC600	K2	RV400	L3		
IC115	B1	IC601	K4	RV401	L1		
IC116	B1	IC602	K5	RV402	M3		
IC201	A1			RV403	L3		
IC203	K2	JP1	F1	RV404	K1		
IC204	D5	JP2	C4	RV405	K2		
IC205	D5	JP3	F1	RV406	M4		
IC207	E5	JP4	B4	RV500	F3		
IC208	D4			RV501	F3		
IC210	D2	LV100	C5	RV502	H2		

CARD RACK **AE-12 BOARD** **AE-12 BOARD** CARD RACK

20-15 (b)

AE-12 BOARD (1-639-123-12)

DVR-2000	DVR-2100
J : S/N 10101 through 10199	J : S/N 10401 through 10999
UC : S/N 10101 through 10299	UC : S/N 10401 through 11099
EK : S/N 10101 through 10599	EK : S/N 10401 through 11099

AE-12 (1-639-123-12)

DVR-2000
DVR-2100

CN707	C4	IC210	C2	LV101	B3	RV503	F1
CN708	E4	IC211	C1	LV102	A3	RV505	G2
CN709	G4	IC300	D2	LV103	A3	RV506	G1
		IC303	C1	LV300	D2	RV507	E2
D100	*B2	IC304	C1	LV301	D4	RV508	F2
D101	*B2	IC305	D1	LV400	H3	RV509	G1
D102	*C4	IC306	E1	LV500	F2	RV510	F4
D300	*D2	IC307	C1			RV601	G2
D303	C2	IC308	E3	Q100	B3		
D304	C2	IC309	E3	Q101	B3	RY1	C4
D305	B1	IC310	D3	Q102	B3		
D400	*H1	IC311	D1	Q103	B3	T300	D3
D401	*H2	IC312	C1	Q104	A2	T500	F3
D404	*E1	IC313	E3	Q105	A2		
D405	*G2	IC314	C2	Q106	A3	TH100	A2
D500	*F2	IC315	C2	Q107	A3	TH101	A2
D501	G2	IC316	E1	Q108	A2	TH400	H2
D502	G2	IC402	H1	Q109	A2	TH401	G2
D504	B1	IC403	H1	Q110	A3		
D600	*G2	IC404	H2	Q111	A3	TP102	B3
D601	G2	IC405	G1	Q112	*C4	TP103	B3
		IC406	H3	Q300	D3	TP104	B3
E1	H1	IC407	H2	Q301	D2	TP105	B3
E2	G1	IC408	H3	Q302	D2	TP106	A3
E3	G3	IC409	G1	Q303	D3	TP107	A3
E4	F2	IC410	H3	Q308	*E3	TP108	A3
E5	E3	IC411	H3	Q400	*H3	TP109	A3
E6	D2	IC412	H2	Q500	F3	TP300	E1
E7	D3	IC413	E2	Q501	F2	TP301	E1
E8	B2	IC414	G2	Q502	F2	TP302	E3
		IC415	G3	Q503	F3	TP304	D2
IC100	C2	IC416	E2			TP306	D2
IC101	E2	IC500	D2	RB200	C3	TP400	H2
IC102	B1	IC501	F2	RB201	C3	TP402	H1
IC103	C1	IC504	F3	RB202	D3	TP403	H2
IC104	C1	IC505	F3	RB203	C2	TP405	G1
IC105	B2	IC506	F2	RB204	C3	TP500	F1
IC106	A1	IC507	F2	RB205	C2	TP501	G2
IC107	B2	IC508	E2	RB206	C3	TP502	E2
IC108	A1	IC509	G1			TP503	F1
IC109	B1	IC510	G3	RV100	B2	TP504	G1
IC110	A1	IC511	F1	RV101	B2	TP505	F1
IC111	H1	IC512	F1	RV102	A2	TP600	G2
IC112	B1	IC513		RV103	A2		
IC113	B1	IC514	F1	RV300	D1		
IC114	B1	IC515	F2	RV302	E1		
IC115	A1	IC516	G3	RV400	H2		
IC116	A1	IC517	F1	RV401	H1		
IC200	E4	IC600	G2	RV402	H2		
IC201	A1	IC601	G3	RV403	H2		
IC202	E4	IC602	G3	RV404	G1		
IC203	G1			RV405	G2		
IC204	C3	JP1	G2	RV406	H3		
IC205	C3	JP2	G2	RV500	D2		
IC207	D3			RV501	D2		
IC208	C3	LV100	B3	RV502	F1		

* : B SIDE

A Side

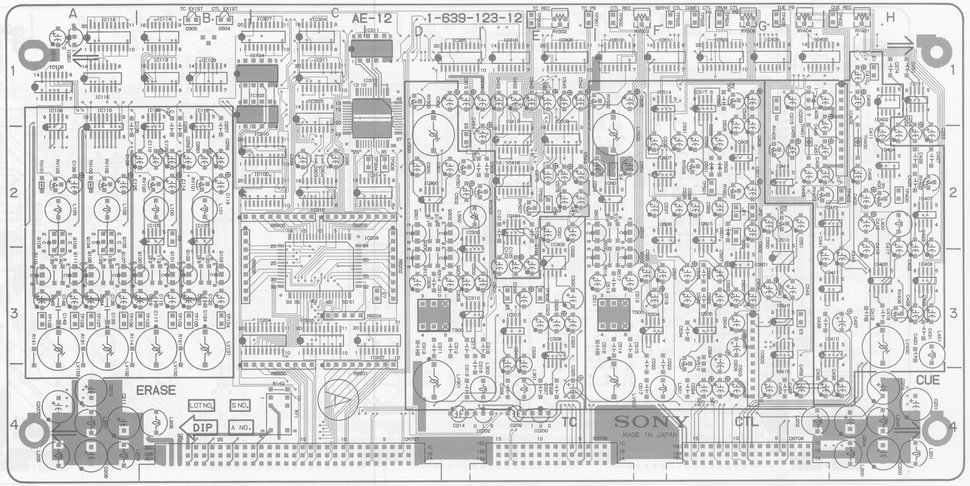

1-639-123-12 A SIDE

B Side

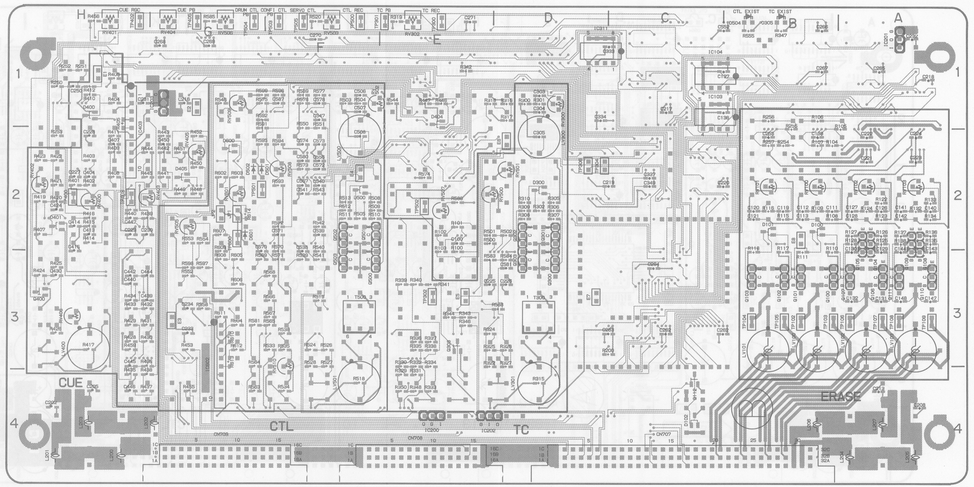

1-639-123-12 B SIDE

CARD RACK **AE-12 BOARD** **AE-12 BOARD** CARD RACK

20-14 (a)

AE-12 BOARD (1-639-123-11)

DVR-2000	DVR-2100
J : S/N 10001 through 10099	J : S/N 10001 through 10399
UC : S/N 10001 through 10099	UC : S/N 10001 through 10399
EK : S/N 10001 through 10099	EK : S/N 10001 through 10399

A Side

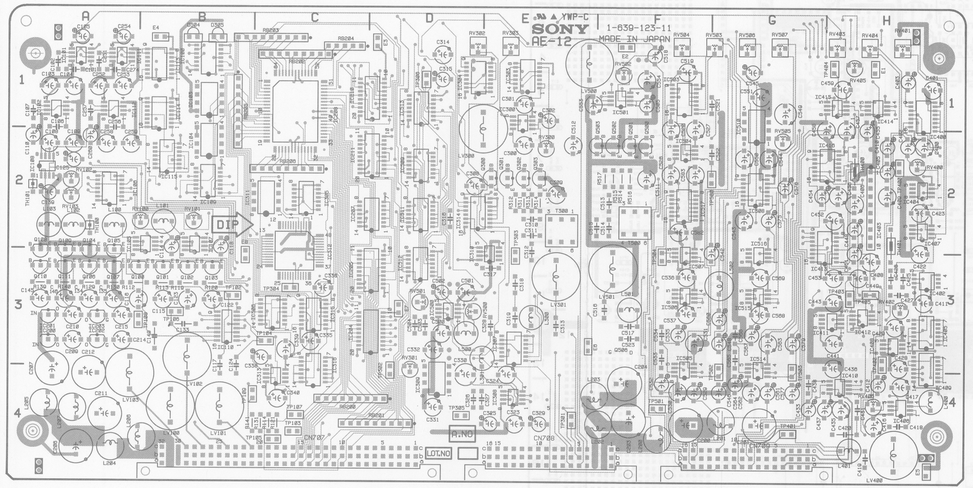

1-639-123-11 A SIDE

B Side

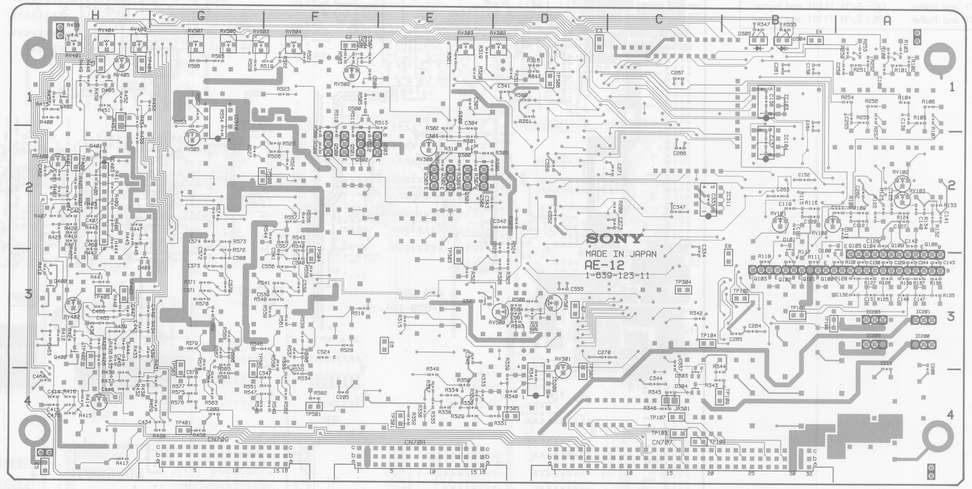

1-639-123-11 B SIDE

DUS-481 BOARD (1-641-736-11)

A Side

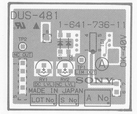

1-641-736-11 A SIDE

B Side

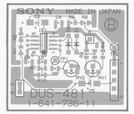

1-641-736-11 B SIDE

DUS-481 CARD RACK AE-12 BOARD AE-12 BOARD CARD RACK DUS-481

AE-12 (1-639-123-11)

DVR-2000
DVR-2100

CN707	C4	IC304	D1	LV500	E1	RV504	F1
CN708	E4	IC305	C2	LV501	F3	RV505	G2
CN709	G4	IC306	C3			RV506	G1
		IC307	E3	Q100	A3	RV507	G1
D100	*B2	IC308	E4	Q101	B3		
D101	*B2	IC309	D4	Q102	B3	TH100	A2
D300	*E2	IC310	D3	Q103	B3	TH101	A2
D303	*C4	IC311	B2	Q104	A2	TH400	H2
D304	*C4	IC312	C3	Q105	A2	TH401	H2
D305	B1	IC313	C4	Q106	A3		
D400	*H3	IC314	D2	Q107	A3	TP102	B3
D401	*H2	IC315	C3	Q108	A2	TP103	C4
D404	*H3	IC316	C4	Q109	A2	TP104	C3
D405	*H1	IC400	H2	Q110	A3	TP105	C4
D500	*F1	IC402	H3	Q111	A3	TP106	B3
D504	B1	IC403	H2	Q300	E2	TP107	C4
		IC404	H2	Q301	E2	TP108	B3
E1	H1	IC405	H3	Q302	E2	TP109	B4
E2	F1	IC406	H4	Q303	E2	TP301	E4
E3	D1	IC407	H2	Q308	*E3	TP302	D4
E4	B1	IC408	H3	Q400	*H3	TP303	E2
E5	H4	IC409	H4	Q402	*H1	TP304	C3
E6	E3	IC410	H4	Q500	F2	TP305	D4
E7	D3	IC411	G3	Q501	F2	TP306	D1
E8	B2	IC412	H3	Q502	F2	TP400	H2
		IC413	G3	Q503	F2	TP401	G4
IC100	B1	IC414	H1			TP402	H3
IC101	A1	IC415	H1	RB200	C4	TP403	H3
IC102	A1	IC416	H2	RB201	D4	TP404	H1
IC103	B1	IC500	D3	RB202	C1	TP405	H3
IC104	B2	IC501	F1	RB203	C1	TP500	F2
IC105	A2	IC503	F1	RB204	C1	TP501	F4
IC106	A2	IC504	F2	RB205	B1	TP502	G4
IC107	B2	IC505	F3	RB206	C2	TP503	G4
IC108	A2	IC506	F3			TP504	F3
IC109	B2	IC507	F3	RV100	A2		
IC110	B3	IC508	G2	RV101	B2	T300	E2
IC111	A1	IC509	D2	RV102	A2	T500	F2
IC112	A1	IC510	G1	RV103	A2		
IC113	B1	IC511	D2	RV300	E2	*: B SIDE	
IC114	B1	IC512	D3	RV301	D3		
IC115	B2	IC513	D1	RV302	D1		
IC200	A3	IC514	G3	RV303	E1		
IC201	A3	IC515	G3	RV400	H2		
IC202	A3	IC516	G2	RV401	H1		
IC203	A3	IC517	F2	RV402	H3		
IC204	C3			RV403	H1		
IC205	C3	LV100	B4	RV404	H1		
IC207	C2	LV101	B4	RV405	H1		
IC208	C1	LV102	B4	RV406	H4		
IC210	C1	LV103	A4	RV500	E3		
IC211	C2	LV300	D2	RV501	D3		
IC300	E1	LV301	E3	RV502	F1		
IC303	E1	LV400	H4	RV503	G1		

CARD RACK **MOA-05 BOARD** **MOA-05 BOARD** CARD RACK

MOA-05 BOARD (1-639-121-13)

MOA-05 (1-639-121-13)

DVR-2000
DVR-2100

CN511	A6	Q3	D9
CN512	A16	Q4	B8
		Q5	B8
D1	G2	Q6	A5
D2	G4	Q7	F8
D3	G3	Q8	F6
D4	G2	Q10	P8
D5	M2	Q11	P8
D6	M4	Q12	S9
D7	B4	Q13	S8
D8	F8	Q14	M9
D9	F6	Q15	M8
D10	R6	Q17	N9
		Q18	N8
E1	H4	Q19	R6
E3	E7		
E5	B10	RV1	G4
E9	P5	RV2	J5
E13	P6	RV6	B9
E14	T10	RV8	N5
E16	L10	RV9	C3
E17	T5	RV11	D4
E18	N10	RV15	R9
E19	M4	RV17	R9
E20	A21	RV19	L7
E21	B14	RV21	M7
E22	G16		
E23	G22	RY1	G2
E24	M19	RY2	B5
E25	N16	RY3	F9
E26	D15	RY4	F7
E27	N22	RY5	R6
E28	T19		
E50	E5	SL1	G1
		SL2	G1
FL1	M5		
FL3	E2	TP3	T11
FL4	P10	TP4	L2
FL5	R10	TP5	A10
FL8	D5	TP6	T7
		TP7	T9
MF1	J21	TP9	T10
MF2	J21	TP13	R7
MF3	J21	TP15	R7
MF4	J20	TP17	T6
MF5	J20	TP19	T4
MF6	J20	TP37	E15
MF7	J20	TP38	T3
MF8	J20	TP39	T14
MF9	J22	TP40	T22
MF10	J22	TP41	T21
MF11	J21	TP42	T20
MF12	J21	TP43	T18
		TP44	T17
Q1	G2	TP45	T16
Q2	J2		

IC No. on this board shows its address.

A Side

DVR-2000	DVR-2100
J ; S/N 10201 and higher	J ; S/N 10801 and higher
UC ; S/N 10301 and higher	UC ; S/N 11101 and higher
EK ; S/N 10601 and higher	EK ; S/N 11101 and higher

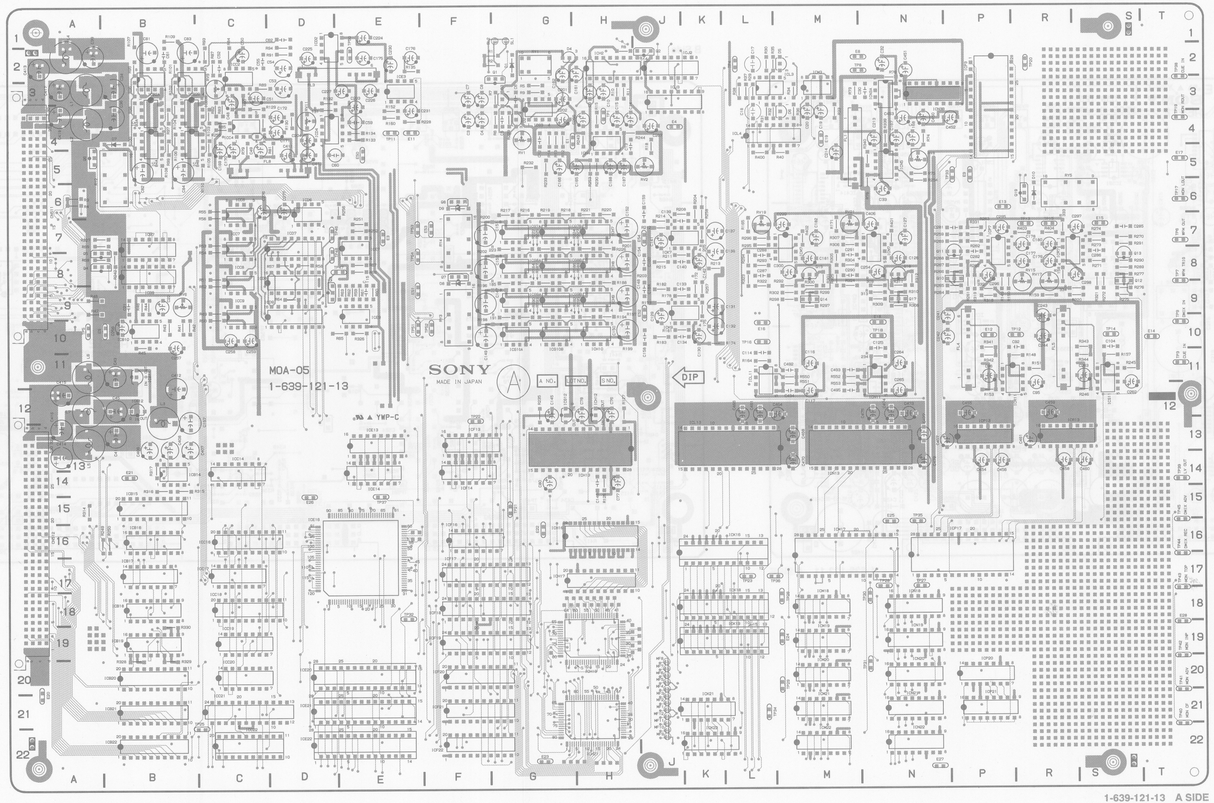

1-639-121-13 A SIDE

20-16 (c)

CARD RACK REC-09 (3/8) BOARD REC-09 (3/8) BOARD CARD RACK

REC-09 BOARD **(3/8)**

REC Signal Processor

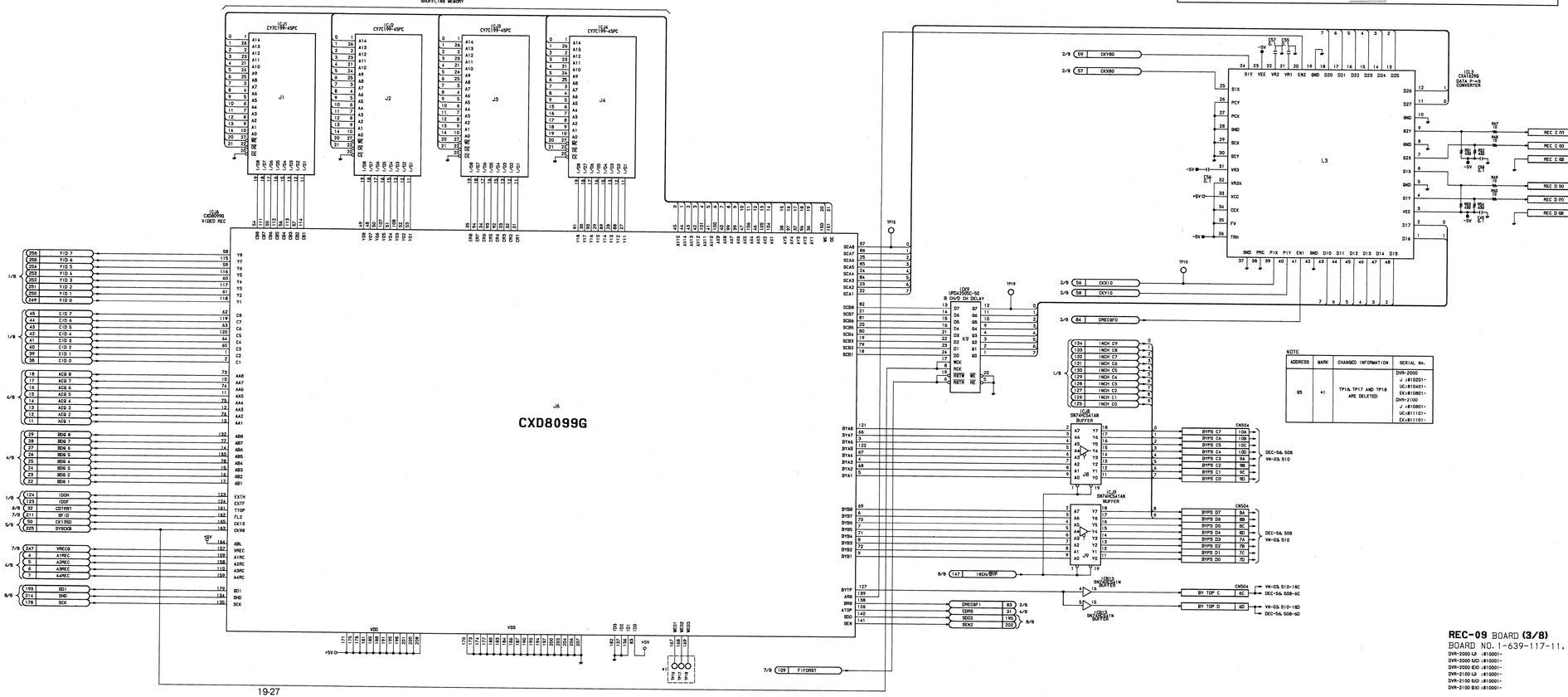

REC-09 BOARD **(3/8)**

BOARD NO. 1-639-117-11, -12

DVR-2000 LD :#10001-
DVR-2000 SJC :#10001-
DVR-2000 EX0 :#10001-
DVR-2100 LD :#10001-
DVR-2100 SJC :#10001-
DVR-2100 EX0 :#10001-

REC-09 (4/8) BOARD CARD RACK
CARD RACK **REC-09 (4/8) BOARD**

REC-09 BOARD (4/8)

REC Signal Processor

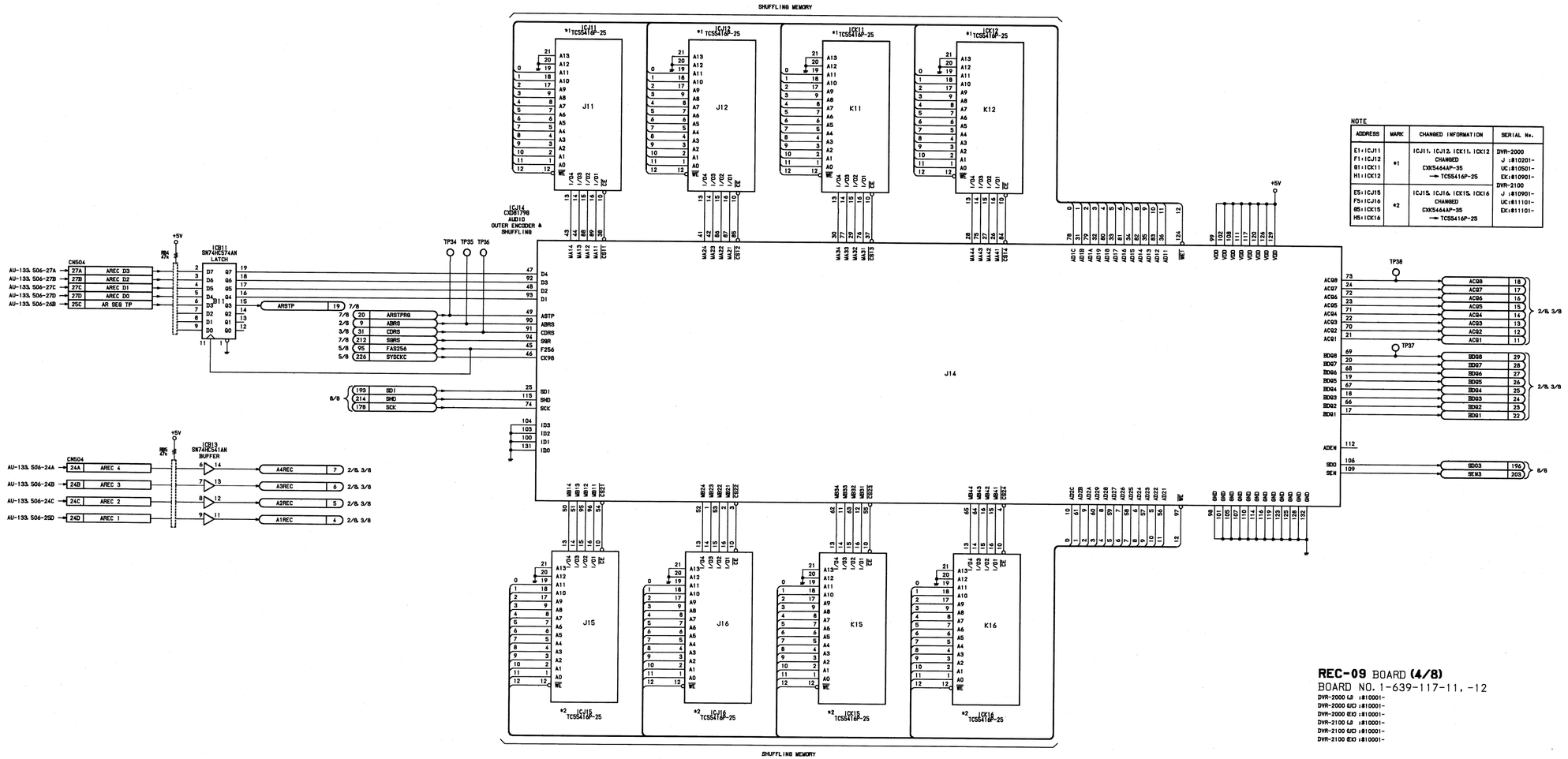

NOTE

ADDRESS	MARK	CHANGED INFORMATION	SERIAL No.
E1:ICJ11 F1:ICJ12 G1:ICK11 H1:ICK12	*1	ICJ11, ICJ12, ICK11, ICK12 CHANGED CXK5464AP-35 → TC55416P-25	DVR-2000 J :810201- UC:810501- EX:810901-
E5:ICJ15 F5:ICJ16 G5:ICK15 H5:ICK16	*2	ICJ15, ICJ16, ICK15, ICK16 CHANGED CXK5464AP-35 → TC55416P-25	DVR-2100 J :810901- UC:811101- EX:811101-

REC-09 BOARD **(4/8)**

BOARD NO. 1-639-117-11, -12

DVR-2000 (J) :810001-
DVR-2000 (UC) :810001-
DVR-2000 (EX) :810001-
DVR-2100 (J) :810001-
DVR-2100 (UC) :810001-
DVR-2100 (EX) :810001-

19-29

REC-09 BOARD (5/8)

REC Signal Processor

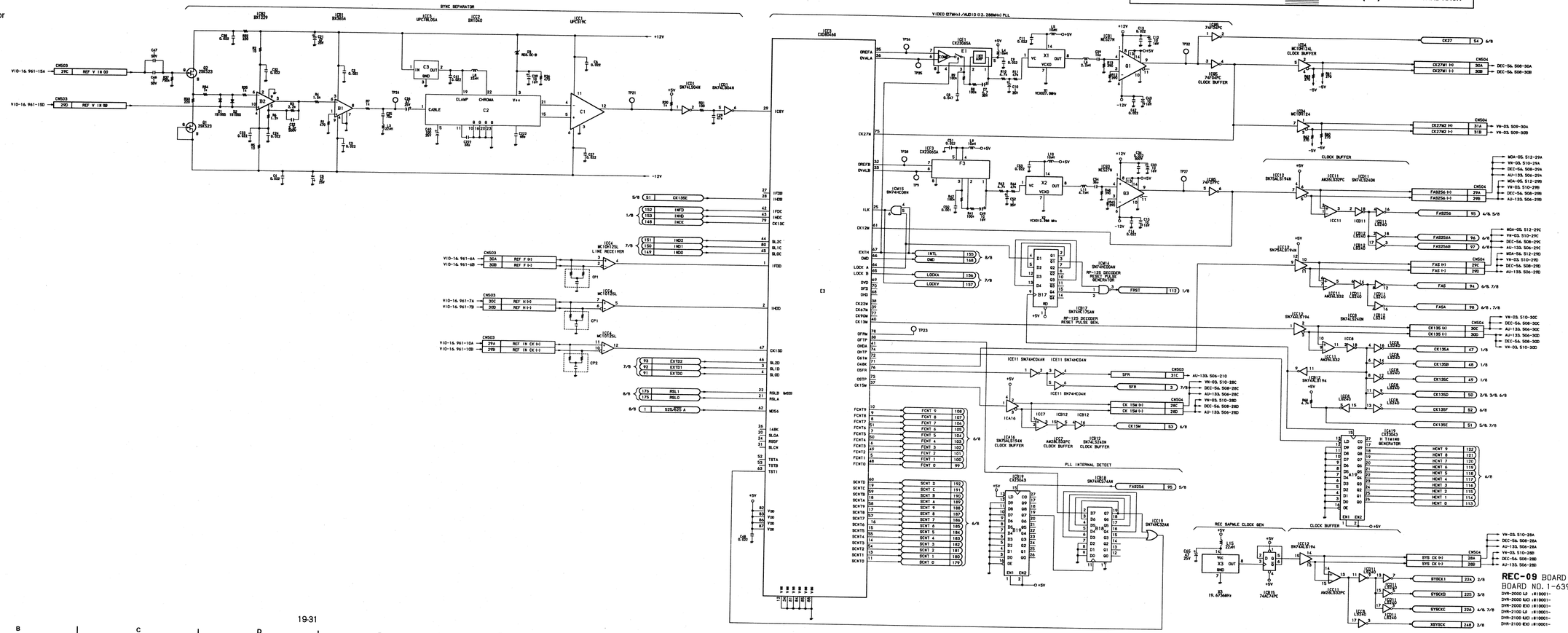

CARD RACK REC-09 (5/8) BOARD REC-09 (5/8) BOARD CARD RACK

19-31

CARD RACK REC-09 (5/8) BOARD REC-09 (5/8) BOARD CARD RACK

REC-09 BOARD (5/8)

REC Signal Processor

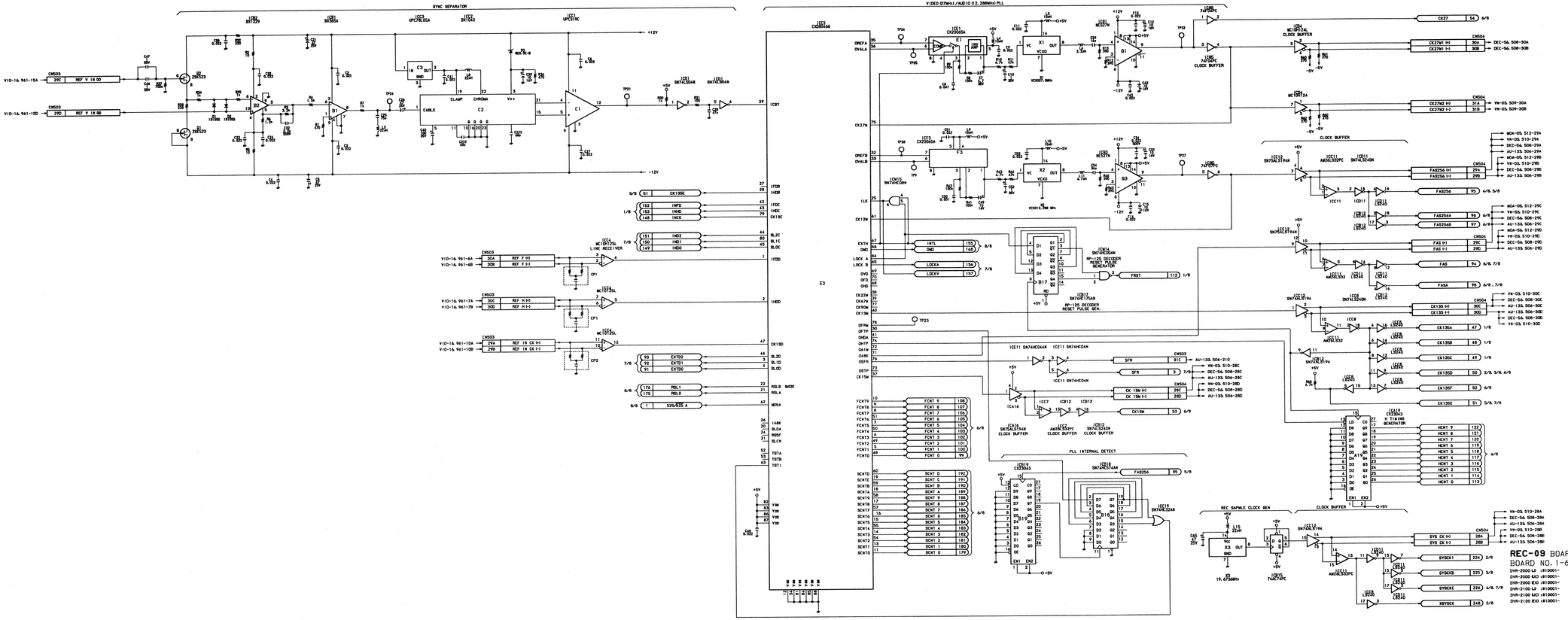

CARD RACK REC-09 (6/8) BOARD REC-09 (6/8) BOARD CARD RACK

REC-09 BOARD (6/8)
REC Signal Processor

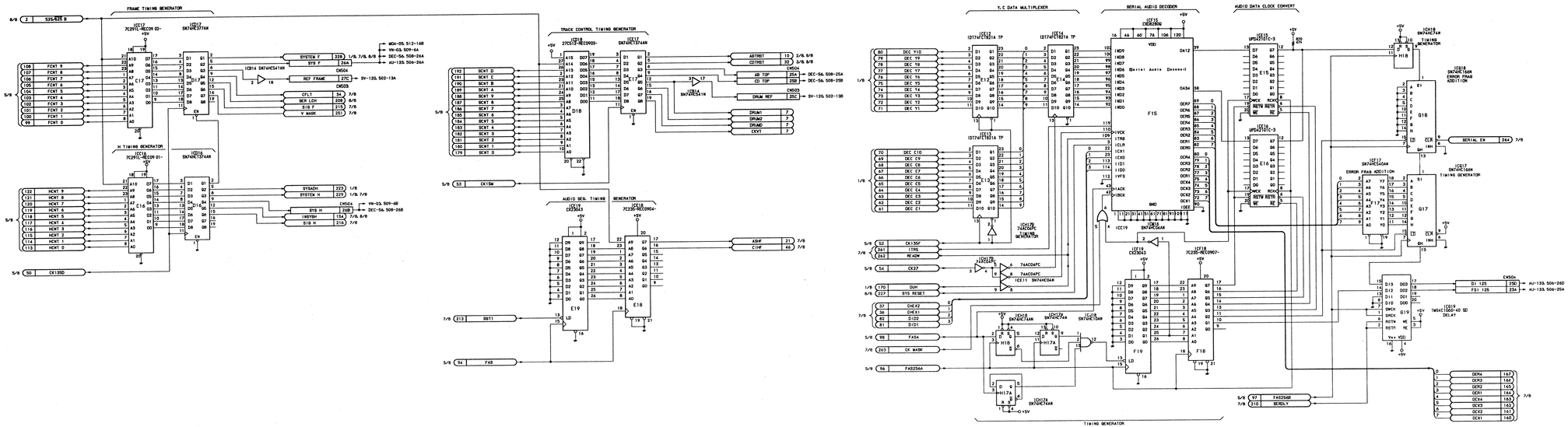

CARD RACK REC-09 (6/8) BOARD REC-09 (6/8) BOARD CARD RACK

REC-09 BOARD (6/8)

REC Signal Processor

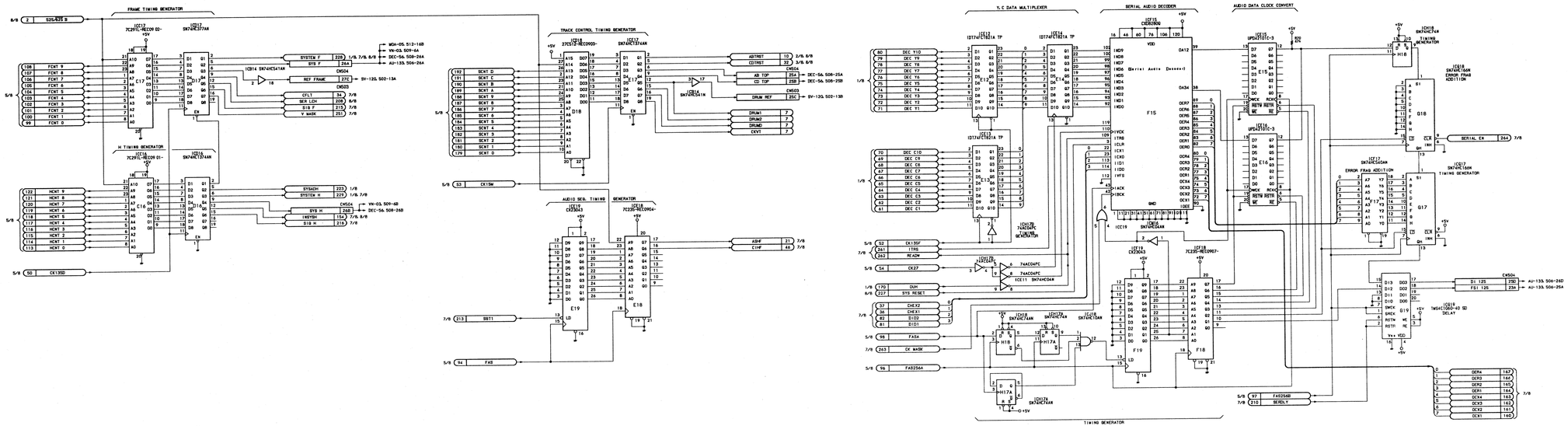

REC-09 BOARD (6/8)

BOARD NO. 1-639-117-11, -12

DVR-2000 LE (#10001-
DVR-2000 SUC (#10001-
DVR-2000 EUC (#10001-
DVR-2100 LE (#10001-
DVR-2100 SUC (#10001-
DVR-2100 EUC (#10001-

CARD RACK **REC-09 (6/8) BOARD** REC-09 (6/8) BOARD CARD RACK

REC-09 BOARD (6/8)

REC Signal Processor

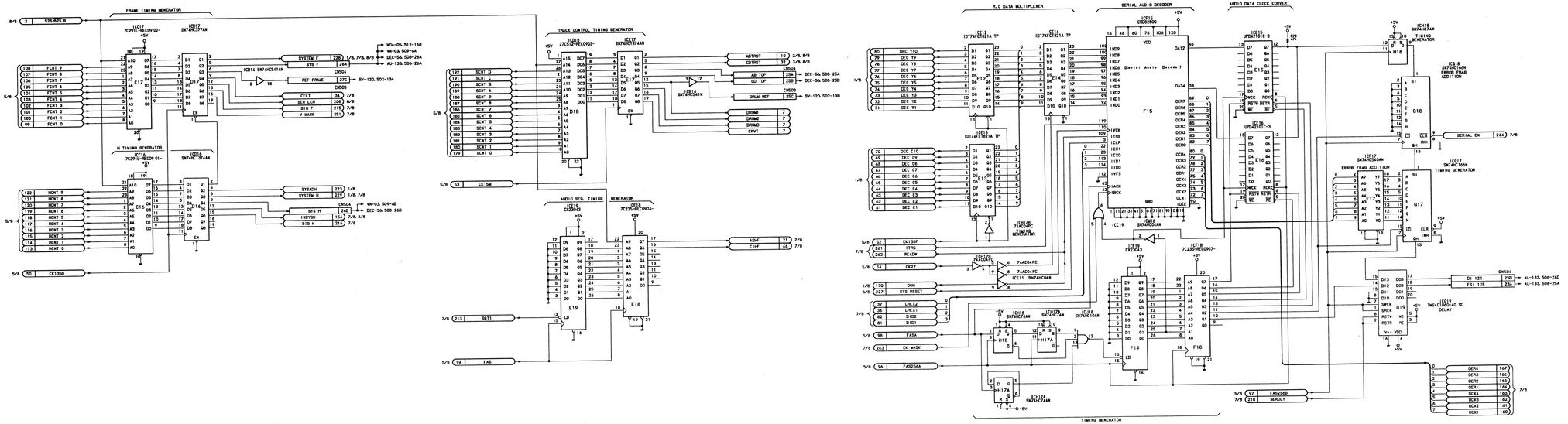

CARD RACK REC-09 (6/8) BOARD REC-09 (6/8) BOARD CARD RACK

REC-09 BOARD (6/8)

REC Signal Processor

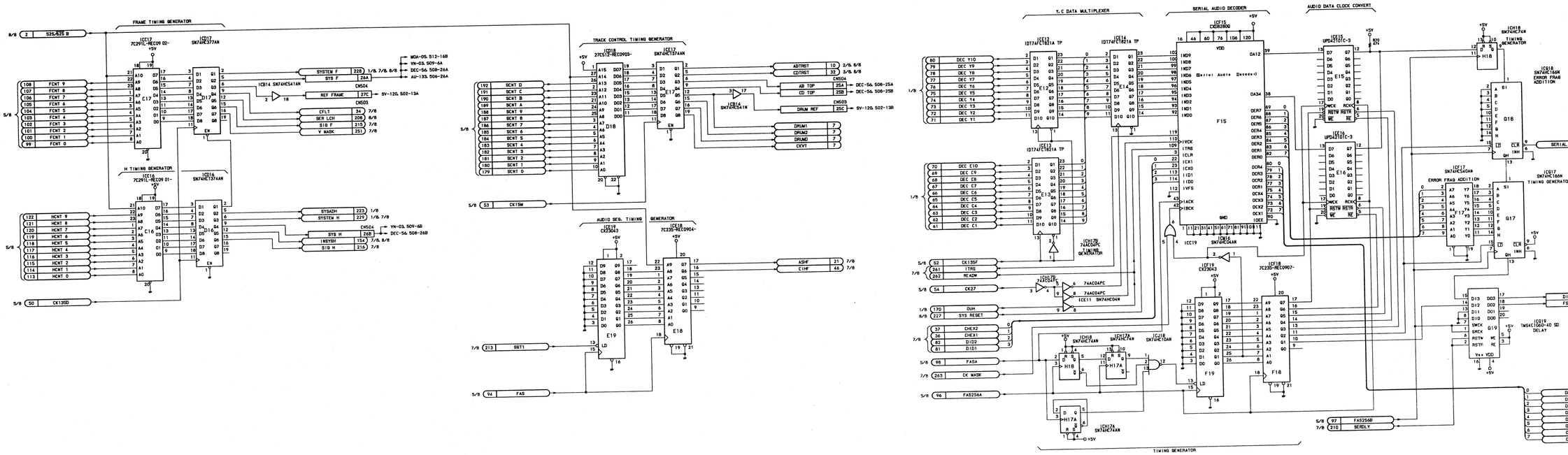

REC-09 B

BOARD NO.

DVR-2000 LJ :R10C
DVR-2000 SJ :R10C
DVR-2000 EJ :R10C
DVR-2100 LJ :R10C
DVR-2100 SJ :R10C
DVR-2100 EJ :R10C

CARD RACK REC-09 (6/8) BOARD REC-09 (6/8) BOARD CARD RACK

REC-09 BOARD (6/8)

REC Signal Processor

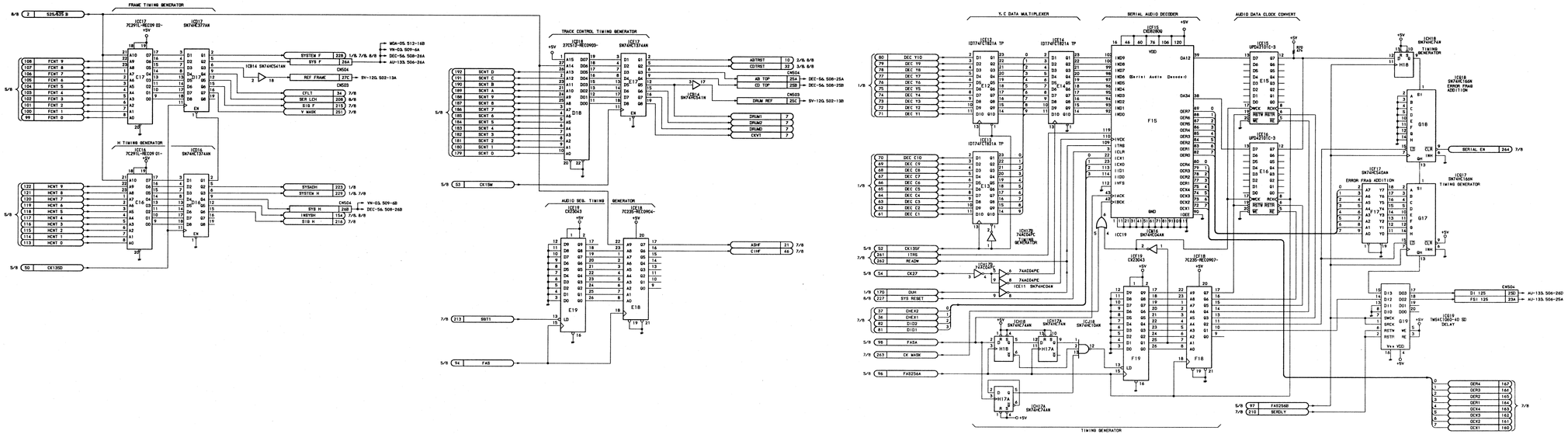

REC-09 BOARD (6/8)

BOARD NO. 1-639-117-11, -12

DVR-2000 LJ (#10001-
DVR-2000 SJ (#10001-
DVR-2000 EXJ (#10001-
DVR-2100 LJ (#10001-
DVR-2100 SJ (#10001-
DVR-2100 EXJ (#10001-

CARD RACK REC-09 (7/8) BOARD REC-09 (7/8) BOARD CARD RACK

REC-09 BOARD (7/8)

REC Signal Processor

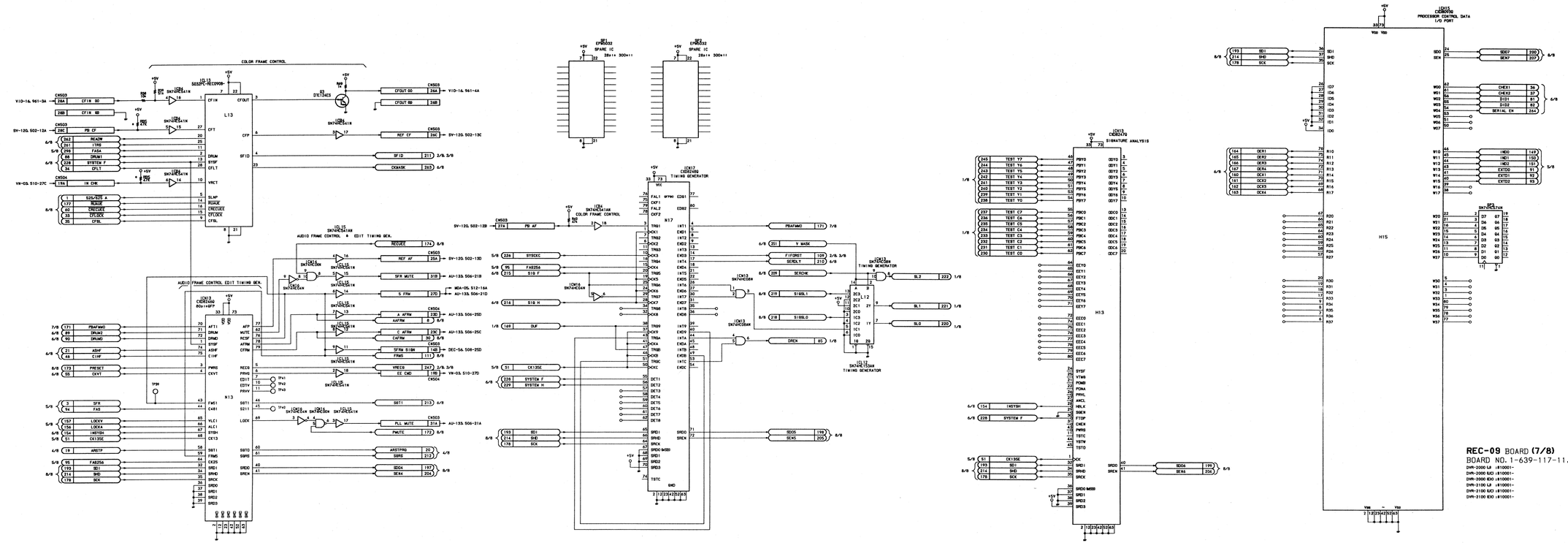

19-35

REC-09 (8/8) BOARD CARD RACK
CARD RACK REC-09 (8/8) BOARD

REC-09 BOARD (8/8)

REC Signal Processor

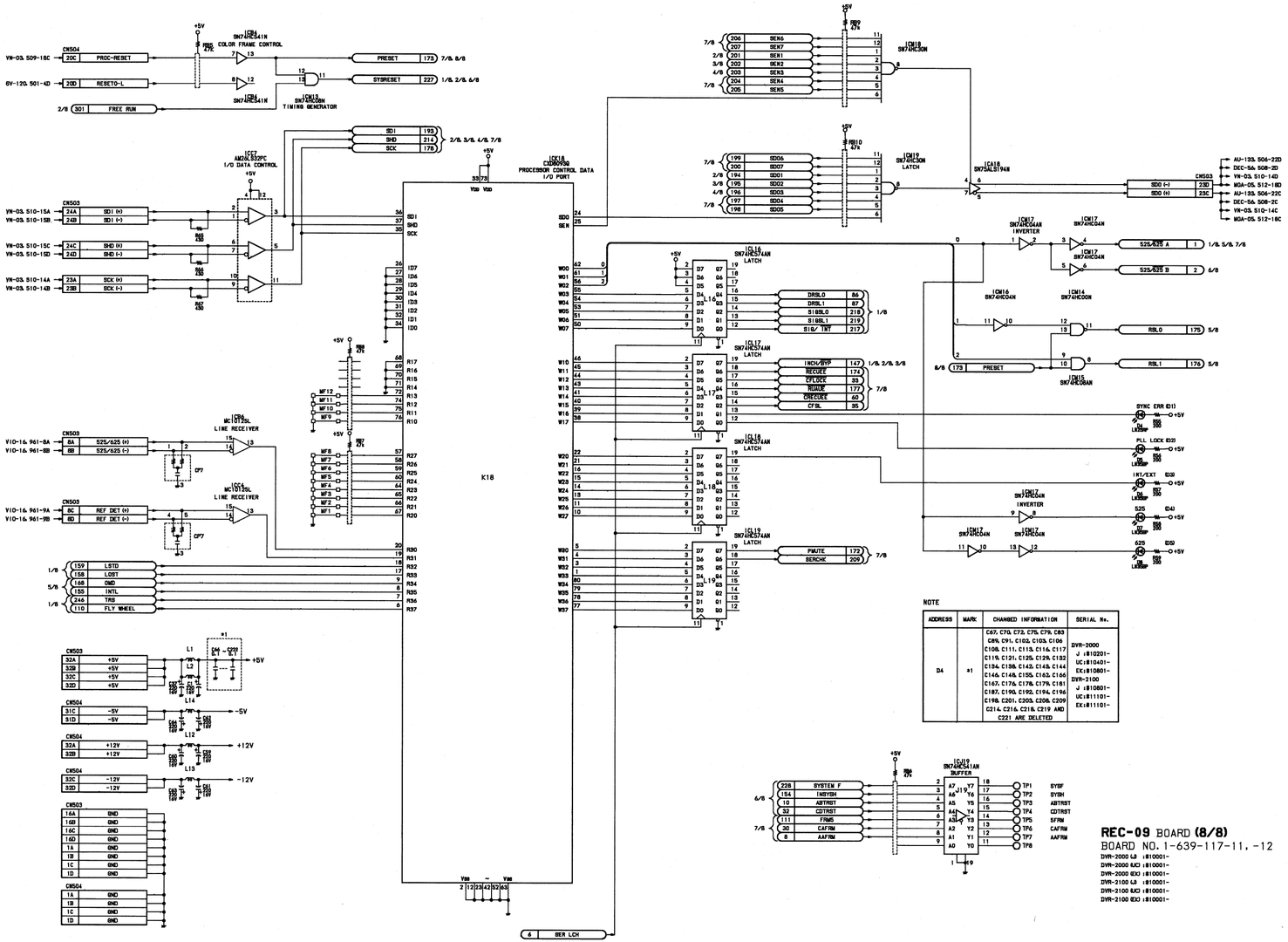

ADDRESS	MARK	CHANGED INFORMATION	SERIAL No.
D4	#1	C67, C70, C72, C75, C78, C83 C86, C91, C102, C103, C106 C108, C111, C113, C116, C117 C119, C121, C125, C129, C132 C134, C138, C142, C143, C144 C146, C148, C155, C162, C164 C167, C176, C178, C179, C181 C187, C190, C192, C194, C196 C198, C201, C203, C206, C209 C214, C216, C218, C219 AND C221 ARE DELETED	DVR-2000 J :#10201- UC:#10401- EX:#10801- DVR-2100 J :#10801- UC:#11101- EX:#11101-

REC-09 BOARD **(8/8)**

BOARD NO. 1-639-117-11, -12

DVR-2000 LJ :#10001-
DVR-2000 UC) :#10001-
DVR-2000 EX) :#10001-
DVR-2100 LJ :#10001-
DVR-2100 UC) :#10001-
DVR-2100 EX) :#10001-

19-37

DEC-56 (1/10) BOARD CARD RACK
CARD RACK DEC-56 (1/10) BOARD

DEC-56 BOARD (1/10)

PB Signal Processor

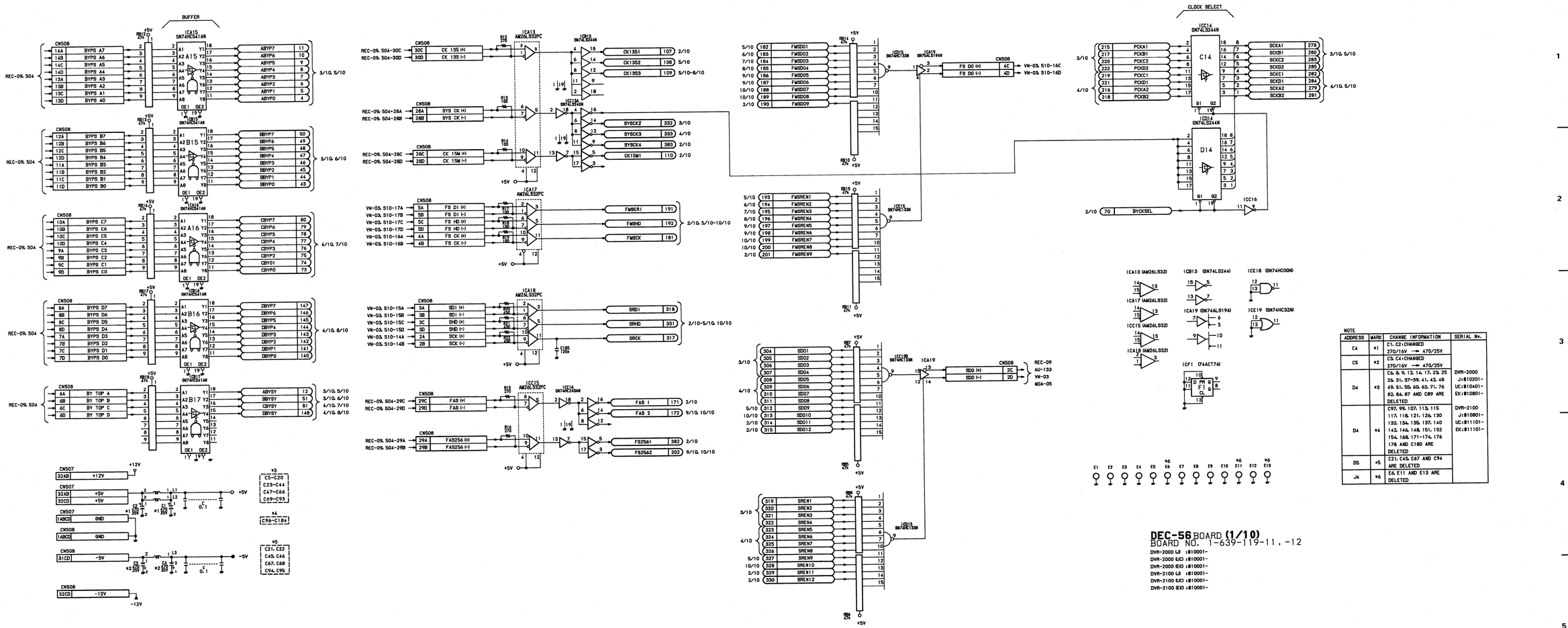

NOTE			
ADDRESS	MARK	CHANGE INFORMATION	SERIAL No.
C4	*1	C1, C2:CHANGED 270/16V → 470/25V	
C5	*2	C3, C4:CHANGED 270/16V → 470/25V	
D4	*3	C6, 8, 9, 12, 14, 17, 23, 25 26, 31, 37-39, 41, 42, 48 49, 51, 55, 60, 63, 71, 76 82, 84, 87 AND C89 ARE DELETED	DVR-2000 J:#10201- UC:#10401- EK:#10801-
D4	*4	C97, 99, 107, 113, 115 117, 118, 121, 126, 130 132, 134, 135, 137, 140 142, 146, 148, 151, 152 154, 168, 171-174, 176 178 AND C180 ARE DELETED	DVR-2100 J:#10801- UC:#11101- EK:#11101-
D5	*5	C21, C45, C67 AND C94 ARE DELETED	
J4	*6	E6, E11 AND E13 ARE DELETED	

DEC-56 BOARD **(1/10)**
BOARD NO. 1-639-119-11, -12

DVR-2000 LJ :#10001-
DVR-2000 (UC) :#10001-
DVR-2000 (EK) :#10001-
DVR-2100 LJ :#10001-
DVR-2100 (UC) :#10001-
DVR-2100 (EK) :#10001-

19-39

CARD RACK DEC-56 (2/10) BOARD DEC-56 (2/10) BOARD CARD RACK

DEC-56 BOARD (2/10)
PB Signal Processor

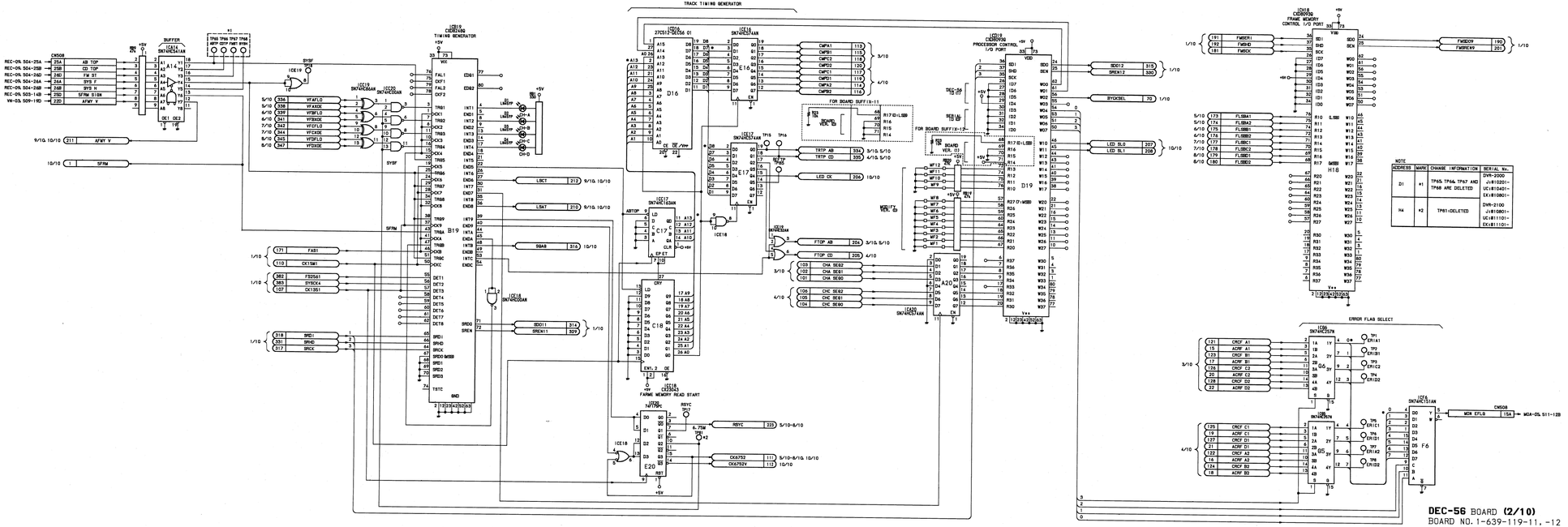

NOTE				
ADDRESS	MARK	CHANGE INFORMATION	SERIAL No.	
D1	#1	TP65, TP66, TP67 AND TP68 ARE DELETED	DVR-2000	JV:810201-
			UC:810401-	
			EX:810801-	
H4	#2	TP81:DELETED	DVR-2100	JV:810801-
			UC:811101-	
			EX:811101-	

DEC-56 BOARD (2/10)
BOARD NO. 1-639-119-11, -12
DVR-2000 LJ :810001-
DVR-2000 EJ/CJ :810001-
DVR-2000 EX/ :810001-
DVR-2100 LJ :810001-
DVR-2100 EJ/CJ :810001-
DVR-2100 EX/ :810001-

19-41

CARD RACK DEC-56 (2/10) BOARD DEC-56 (2/10) BOARD CARD RACK

DEC-56 BOARD (2/10)

PB Signal Processor

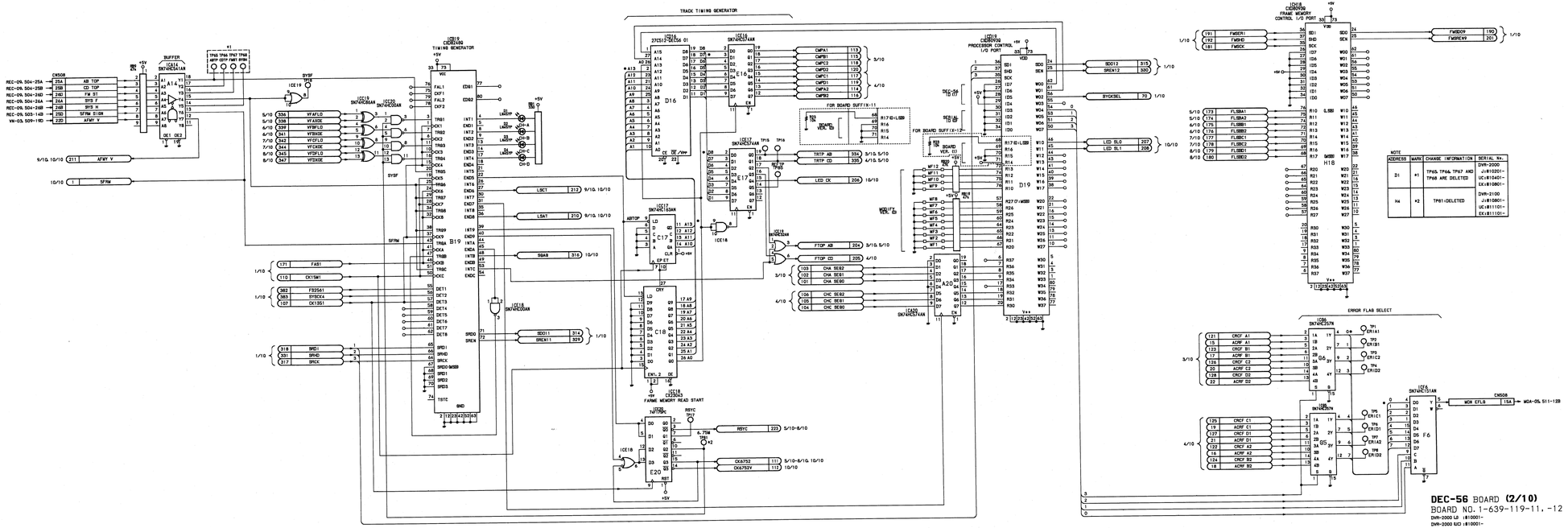

CARD RACK DEC-56 (2/10) BOARD DEC-56 (2/10) BOARD CARD RACK

DEC-56 BOARD (2/10)

PB Signal Processor

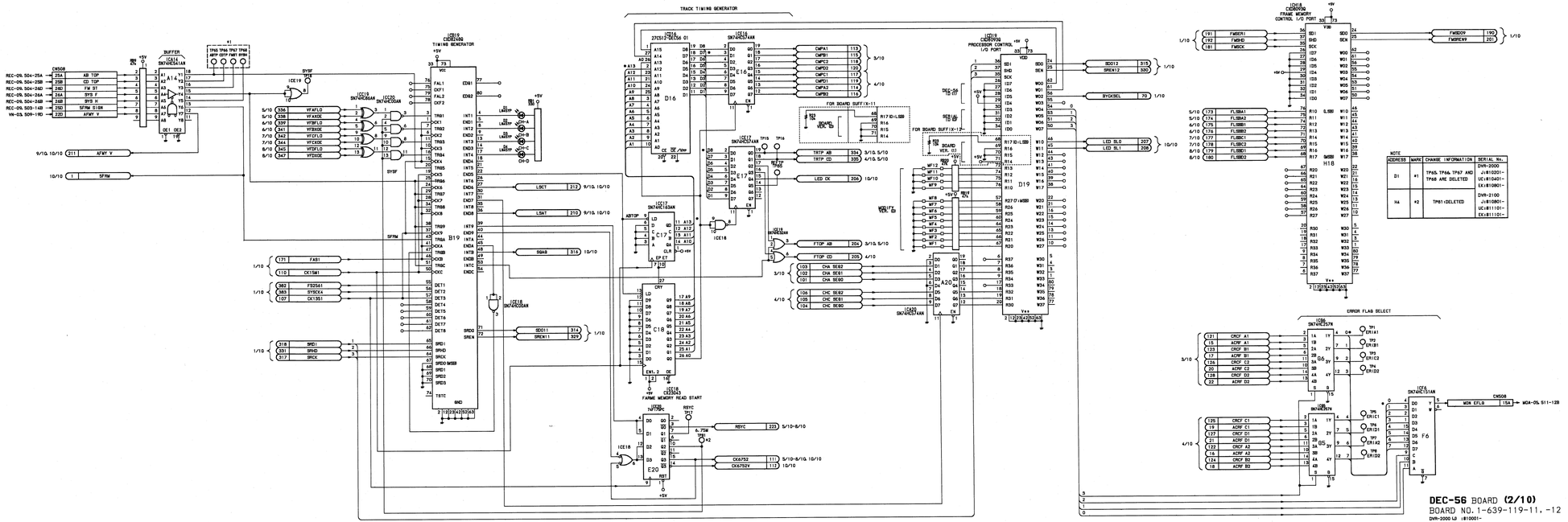

19-41

CARD RACK DEC-56 (3/10) BOARD DEC-56 (3/10) BOARD CARD RACK

DEC-56 BOARD (3/10)

PB Signal Processor

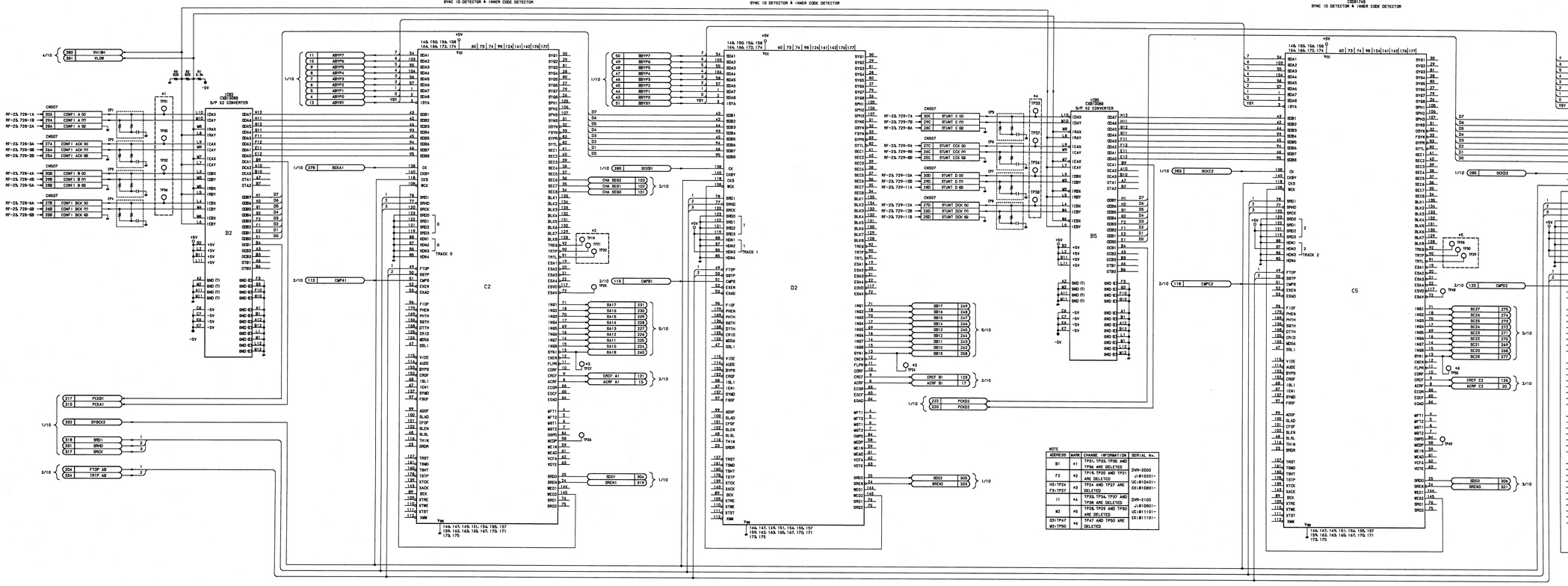

NOTE			
ADDRESS	MARK	CHANGE INFORMATION	SERIAL No.
B1	#1	TP31, TP32, TP36 AND TP36A ARE DELETED	DVR-2000 J:#10201- UC:#10401- EX:#10601-
F2	#2	TP15, TP20 AND TP21 ARE DELETED	
H3-TP24 F3-TP27	#3	TP24 AND TP27 ARE DELETED	
I1	#4	TP33, TP34, TP37 AND TP38 ARE DELETED	DVR-2100 J:#10801- UC:#11101- EX:#11101-
W2	#5	TP28, TP29 AND TP30 ARE DELETED	
G3-TP47 W3-TP50	#6	TP47 AND TP50 ARE DELETED	

DEC-56 BOARD **(3/10)**
BOARD NO. 1-639-119-11, -12

DVR-2000 LJ (#10001-
DVR-2000 KJ (#10001-
DVR-2000 EXJ (#10001-
DVR-2100 LJ (#10001-
DVR-2100 KJ (#10001-
DVR-2100 EXJ (#10001-

19-43

CARD RACK DEC-56 (4/10) BOARD DEC-56 (4/10) BOARD CARD RACK

DEC-56 BOARD (4/10)

PB Signal Processor

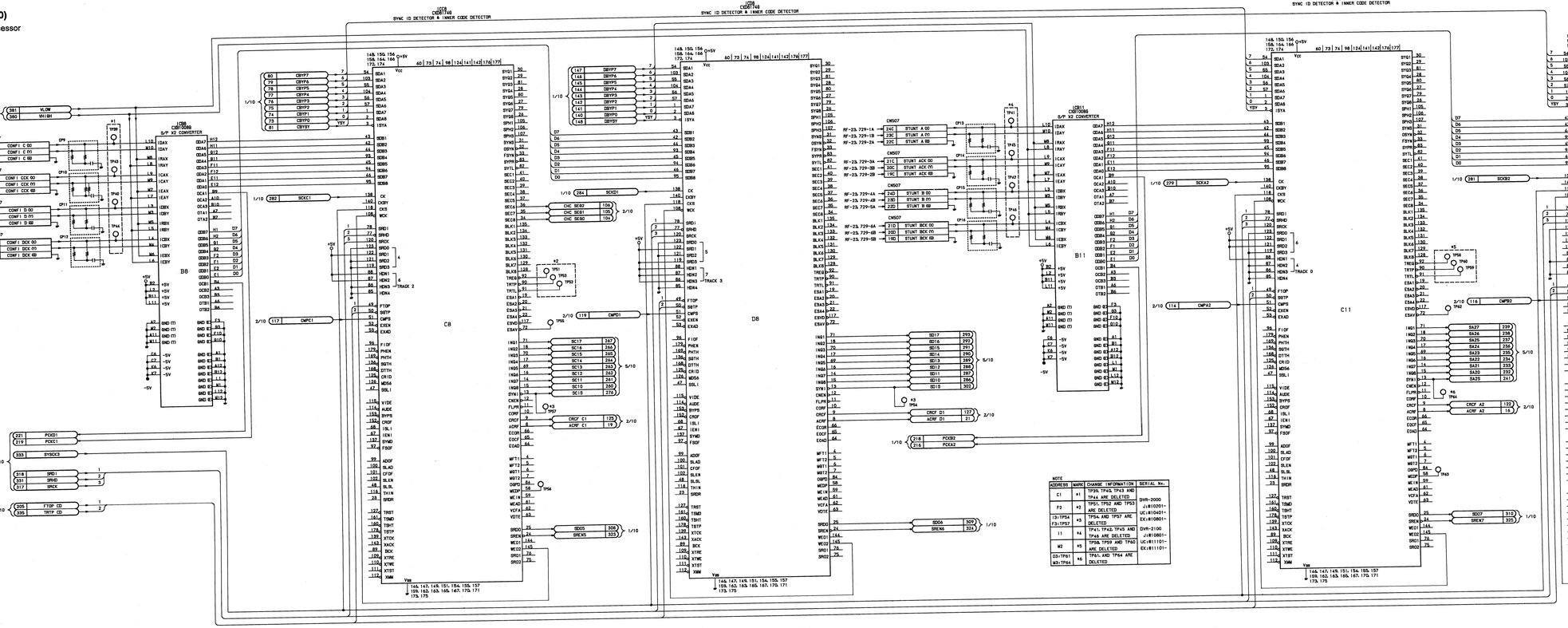

NOTE			
ADDRESS	MARK	CHANGE INFORMATION	SERIAL No.
C1	#1	TP39, TP45, TP43 AND TP44 ARE DELETED	DVR-2000 JU:810201~ UC:810401~ EX:810601~
F2	#2	TP51, TP52 AND TP53 ARE DELETED	
I3-TP54 F3-TP57	#3	TP54, AND TP57 ARE DELETED	DVR-2100 JU:810001~ UC:811101~ EX:811101~
I1	#4	TP41, TP42, TP45 AND TP46 ARE DELETED	
W2	#5	TP58, TP59 AND TP60 ARE DELETED	
I3-TP61 W3-TP64	#6	TP61, AND TP64 ARE DELETED	

DEC-56 BOARD **(4/10)**

BOARD NO. 1-639-119-11, -12

DVR-2000 LB (810001~
DVR-2000 KO (810001~
DVR-2100 LB (810001~
DVR-2100 KO (810001~
DVR-2100 EX (810001~

19-45

CARD RACK DEC-56 (4/10) BOARD
DEC-56 (4/10) BOARD CARD RACK

BOARD (4/10)
PB Signal Processor

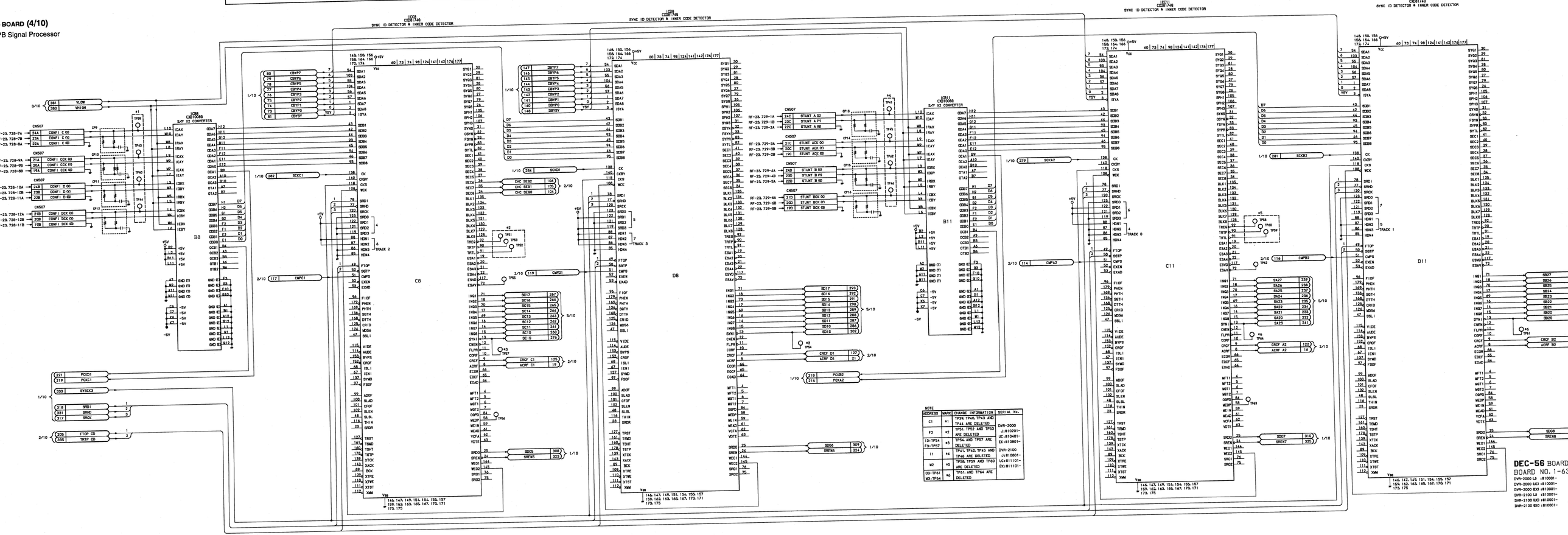

CARD RACK DEC-56 (4/10) BOARD DEC-56 (4/10) BOARD CARD RACK

DEC-56 BOARD (4/10)

PB Signal Processor

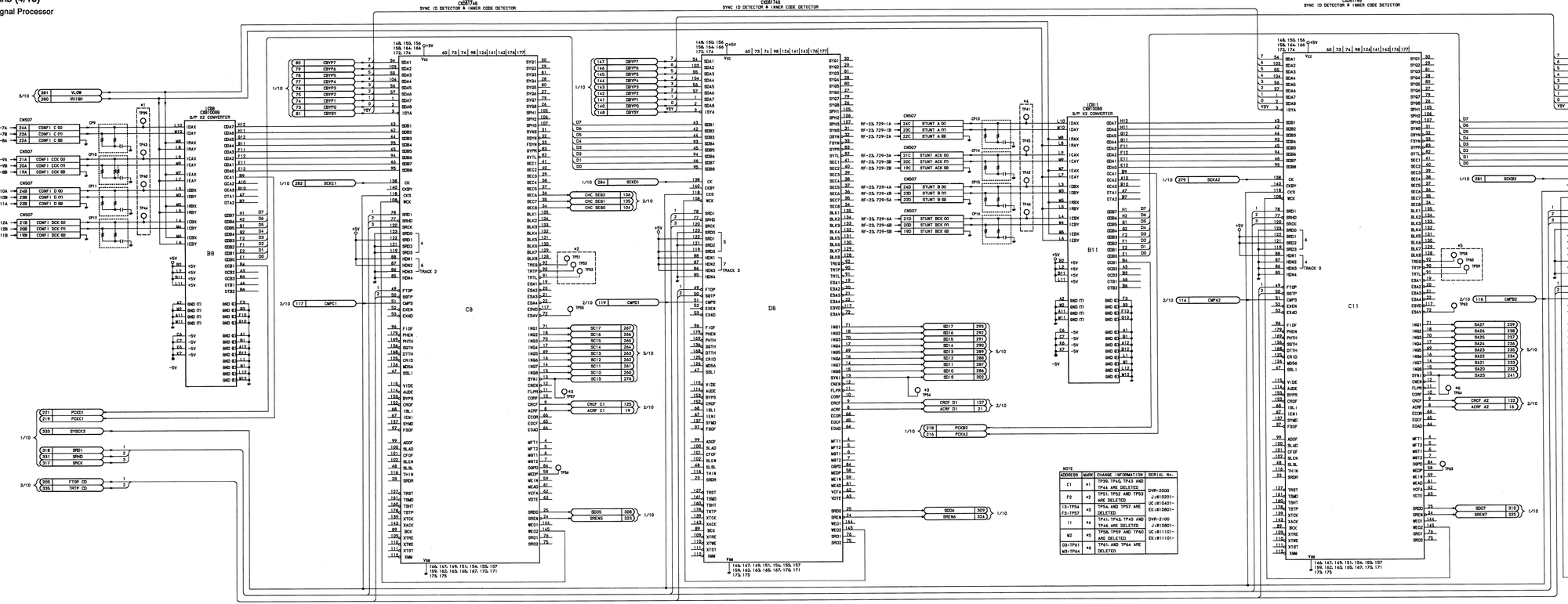

NOTE ADDRESS	MARK	CHANGE INFORMATION	SERIAL No.
C1	#1	TP39, TP40, TP43 AND TP44 ARE DELETED	DVR-2000 JU:810001- UC:810401- EX:810801-
F2	#2	TP51, TP52 AND TP53 ARE DELETED	
F3:TP54 F3:TP57	#3	TP54, TP55, TP56 AND TP57 ARE DELETED	DVR-2100 JU:810001- UC:811101- EX:811101-
I1	#4	TP41, TP42, TP45 AND TP46 ARE DELETED	
M2	#5	TP58, TP59 AND TP60 ARE DELETED	
D3:TP61 M3:TP64	#6	TP61 AND TP64 ARE DELETED	

DEC-56 BOARD (4/10)

BOARD NO. 1-639-119-11, -12

DVR-2000 LB (#10001-
DVR-2000 KC) (#10001-
DVR-2000 EX) (#10001-
DVR-2100 LB (#10001-
DVR-2100 KC) (#10001-
DVR-2100 EX) (#10001-

CARD RACK DEC-56 (5/10) BOARD DEC-56 (5/10) BOARD CARD RACK

DEC-56 BOARD (5/10)

PB Signal Processor

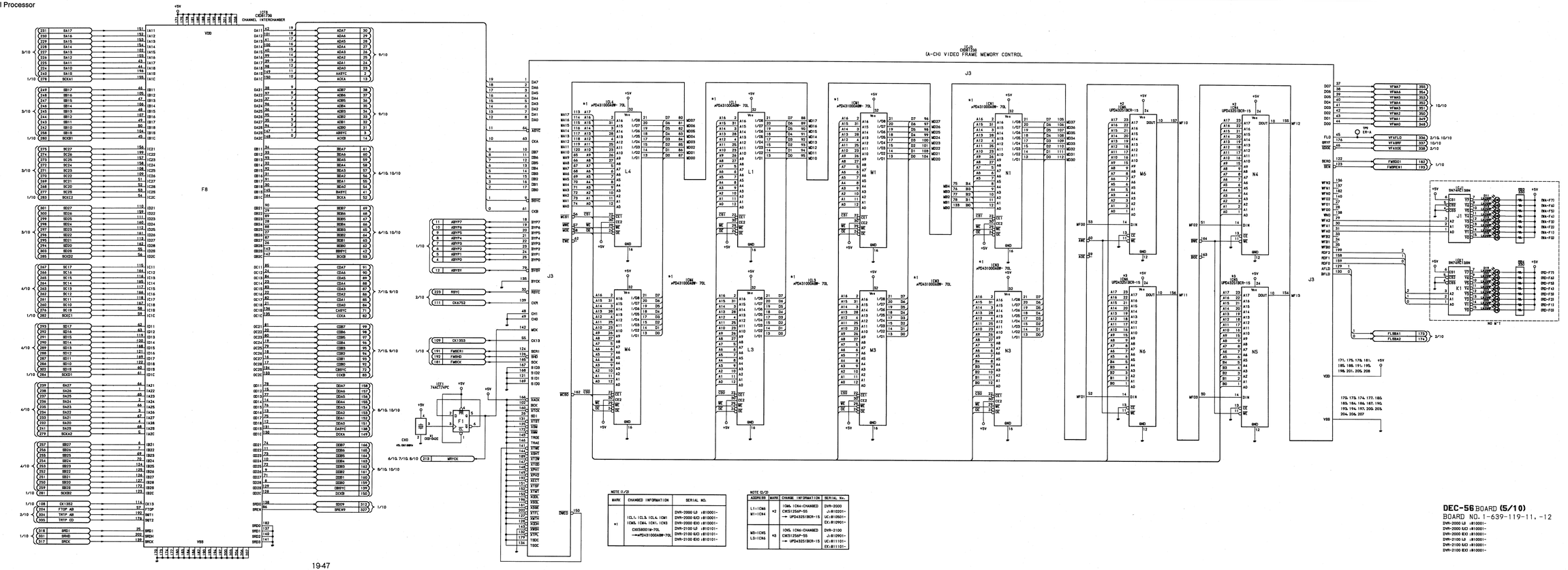

19-47

DEC-56 BOARD (6/10)

PB Signal Processor

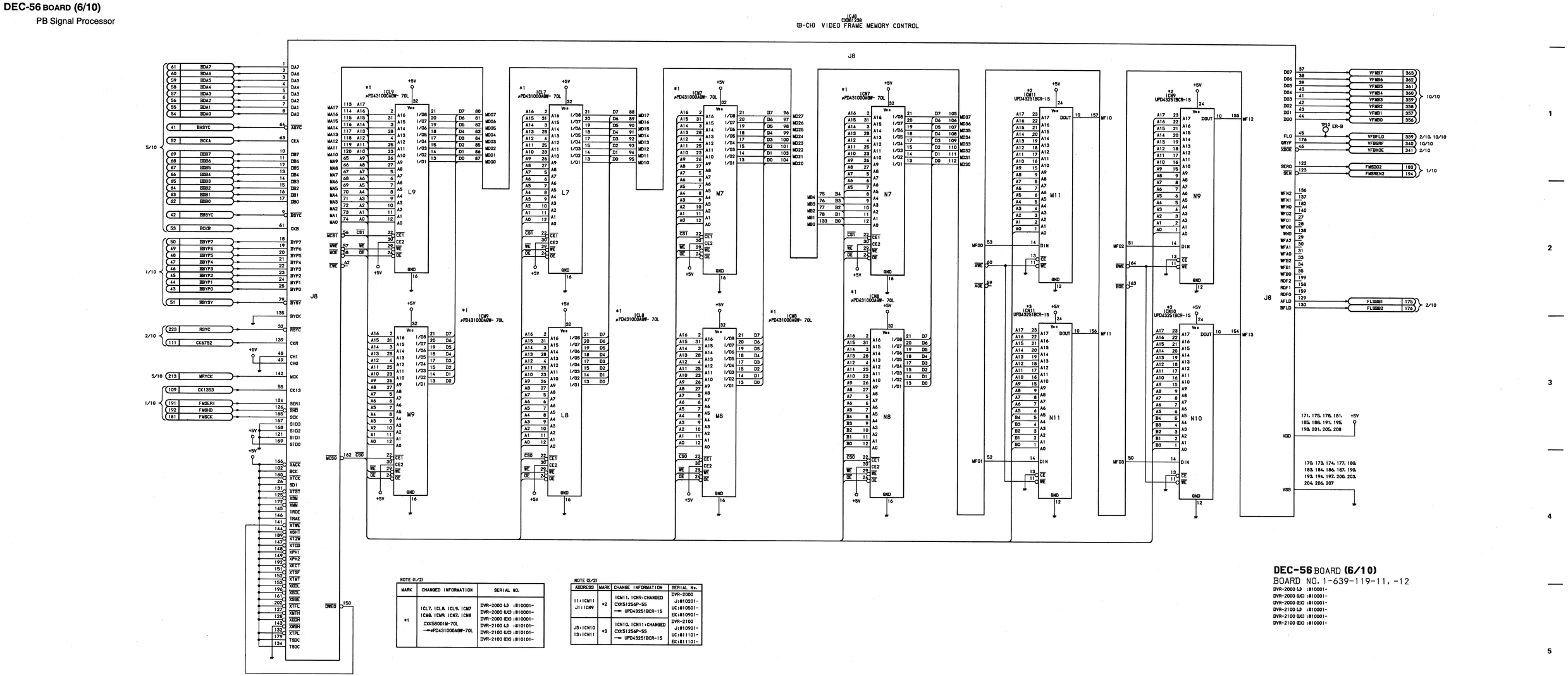

NOTE (1/2)		
MARK	CHANGED INFORMATION	SERIAL NO.
*1	IC17, IC18, IC19, IC17, IC18, IC19, IC17, IC18 CXK58001M-70L →μPD431000AGW-70L	DVR-2000 LJ :#10001- DVR-2000 UC :#10001- DVR-2000 EX :#10001- DVR-2100 LJ :#10101- DVR-2100 UC :#10101- DVR-2100 EX :#10101-

NOTE (2/2)			
ADDRESS	MARK	CHANGE INFORMATION	SERIAL No.
I11:IC11 J11:IC19	*2	IC11, IC19:CHANGED CXK51254P-55 → UPD43251BCR-15	DVR-2000 J :#10201- UC :#10501- EX :#10901-
J5:IC10 I5:IC11	*3	IC10, IC11:CHANGED CXK51254P-55 → UPD43251BCR-15	DVR-2100 J :#10901- UC :#11101- EX :#11101-

DEC-56 BOARD (6/10)
BOARD NO. 1-639-119-11, -12
DVR-2000 LJ :#10001-
DVR-2000 UC :#10001-
DVR-2000 EX :#10001-
DVR-2100 LJ :#10001-
DVR-2100 UC :#10001-
DVR-2100 EX :#10001-

DEC-56 (7/10) BOARD CARD RACK
CARD RACK DEC-56 (7/10) BOARD

DEC-56 BOARD (7/10)

PB Signal Processor

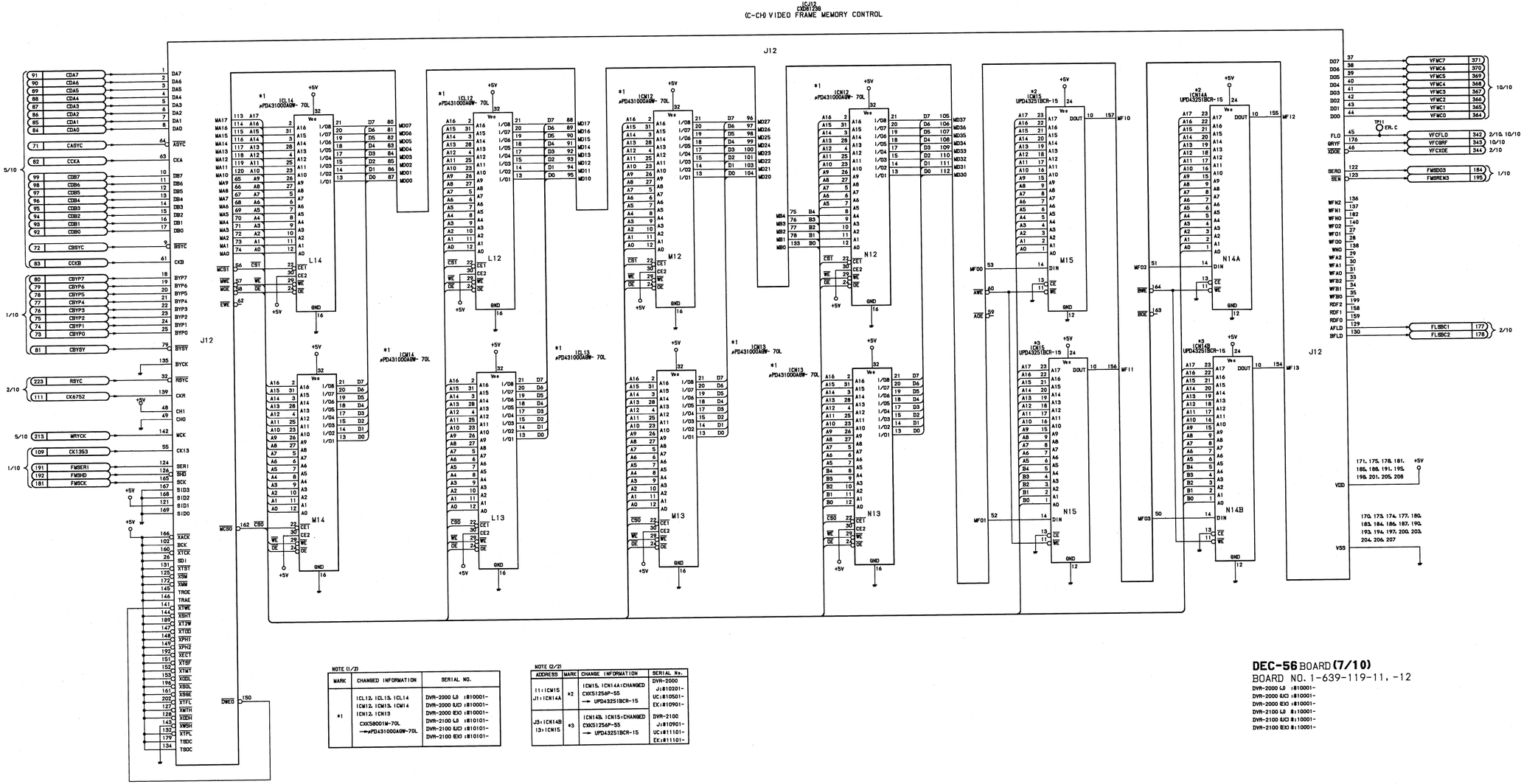

NOTE (1/2)

MARK	CHANGED INFORMATION	SERIAL NO.
*1	IC112, IC113, IC114 IC112, IC113, IC114 IC112, IC113 CXK58001M-70L →μPD431000AGW-70L	DVR-2000 GB :810001- DVR-2000 GUC :810001- DVR-2000 GEX :810001- DVR-2100 GB :810101- DVR-2100 GUC :810101- DVR-2100 GEX :810101-

NOTE (2/2)

ADDRESS	MARK	CHANGE INFORMATION	SERIAL No.
I1:IC115 J1:IC114A	*2	IC115, IC114A:CHANGED CXK51256P-55 → UPD432512BCR-15	DVR-2000 J:810201- UC:810501- EX:810901-
J3:IC114B I3:IC115	*3	IC114B, IC115:CHANGED CXK51256P-55 → UPD432512BCR-15	DVR-2100 J:810901- UC:811101- EX:811101-

DEC-56 BOARD (7/10)

BOARD NO. 1-639-119-11, -12

DVR-2000 GB :810001-
DVR-2000 GUC :810001-
DVR-2000 GEX :810001-
DVR-2100 GB :810001-
DVR-2100 GUC :810001-
DVR-2100 GEX :810001-

19-51

DEC-56 BOARD (8/10)

PB Signal Processor

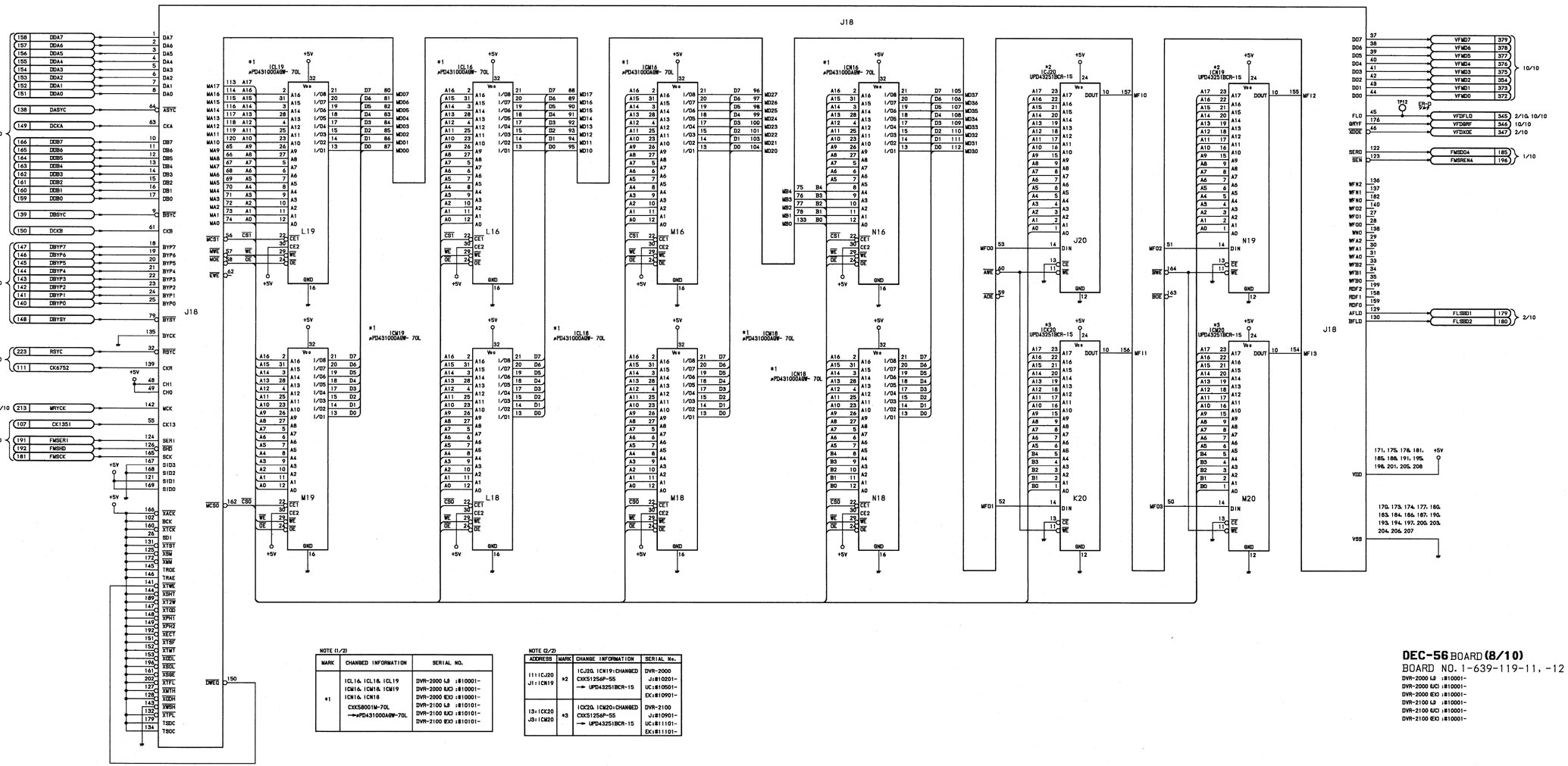

NOTE (1/2)

MARK	CHANGED INFORMATION	SERIAL NO.
*1	IC119 & IC118 & IC119 IC116 & IC118 & IC119 IC117 & IC118 CXK58001M-70L →μPD431000AGW-70L	DVR-2000 LJ :#10001- DVR-2000 UC :#10001- DVR-2000 EX :#10001- DVR-2100 LJ :#10101- DVR-2100 UC :#10101- DVR-2100 EX :#10101-

NOTE (2/2)

ADDRESS	MARK	CHANGE INFORMATION	SERIAL No.
I1:IC120 J1:IC119	*2	IC120, IC119:CHANGED CXK51254P-55 → UPD43251BCR-15	DVR-2000 J:#10201- UC:#10501- EX:#10901-
I3:IC120 J3:IC120	*3	IC120, IC120:CHANGED CXK51254P-55 → UPD43251BCR-15	DVR-2100 J:#10901- UC:#11101- EX:#11101-

DEC-56 BOARD (8/10)

BOARD NO. 1-639-119-11, -12

DVR-2000 LJ :#10001-
DVR-2000 UC :#10001-
DVR-2000 EX :#10001-
DVR-2100 LJ :#10001-
DVR-2100 UC :#10001-
DVR-2100 EX :#10001-

CARD RACK DEC-56 (9/10) BOARD DEC-56 (9/10) BOARD CARD RACK

DEC-56 BOARD (9/10)

PB Signal Processor

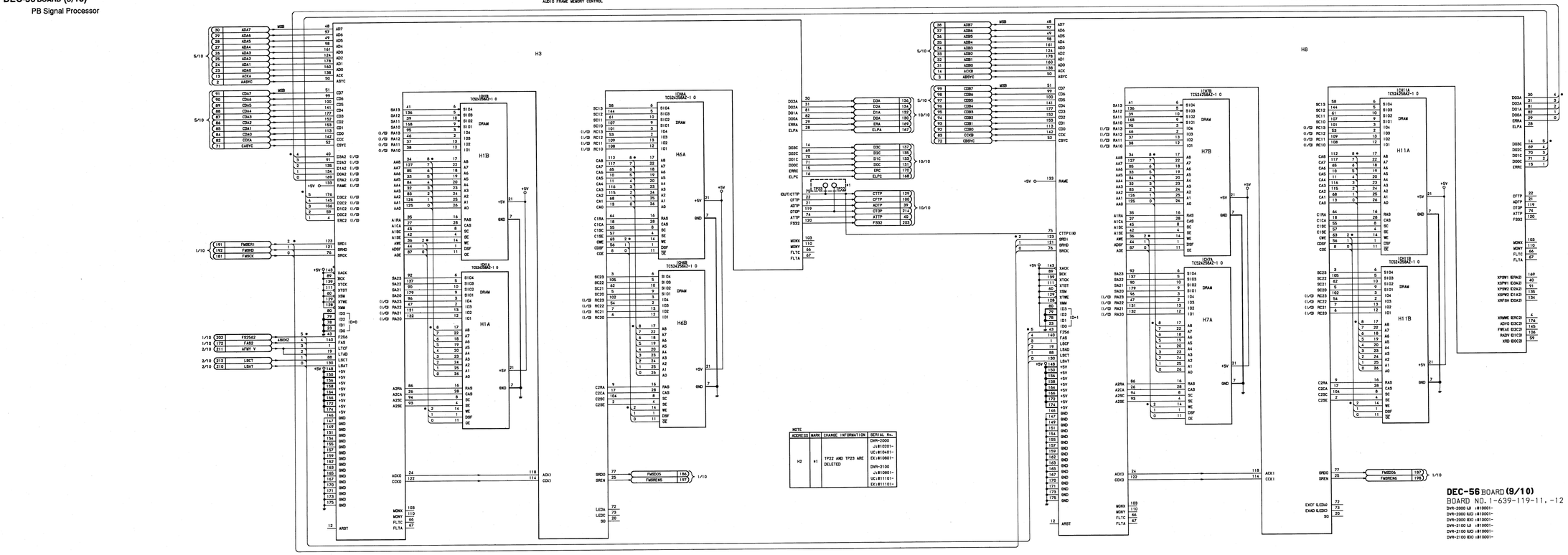

NOTE			
ADDRESS	MARK	CHANGE INFORMATION	SERIAL No.
H2	#1	TP22 AND TP23 ARE DELETED	DVR-2000 J:810201~ UC:810401~ EX:810601~ DVR-2100 J:810801~ UC:811101~ EX:811101~

DEC-56 BOARD (9/10)

BOARD NO. 1-639-119-11, -12

DVR-2000 LJ :810001~
DVR-2000 KJC :810001~
DVR-2000 EJC :810001~
DVR-2100 LJ :810001~
DVR-2100 KJC :810001~
DVR-2100 EJC :810001~

19-55

CARD RACK DEC-56 (10/10) BOARD DEC-56 (10/10) BOARD CARD RACK

DEC-56 BOARD (10/10)

PB Signal Processor

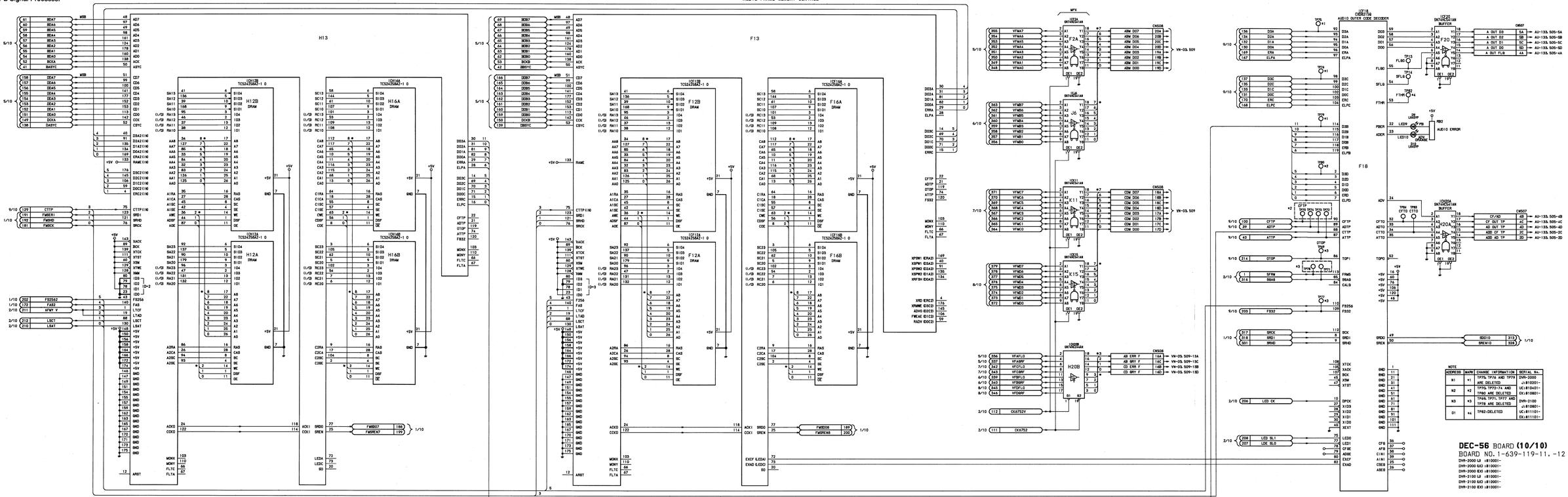

DEC-56 BOARD **(10/10)**

BOARD NO. 1-639-119-11, -12

19-57

CARD RACK VN-03 (1/10) BOARD VN-03 (1/10) BOARD CARD RACK

VN-03 BOARD (1/10)

PB Signal Processor

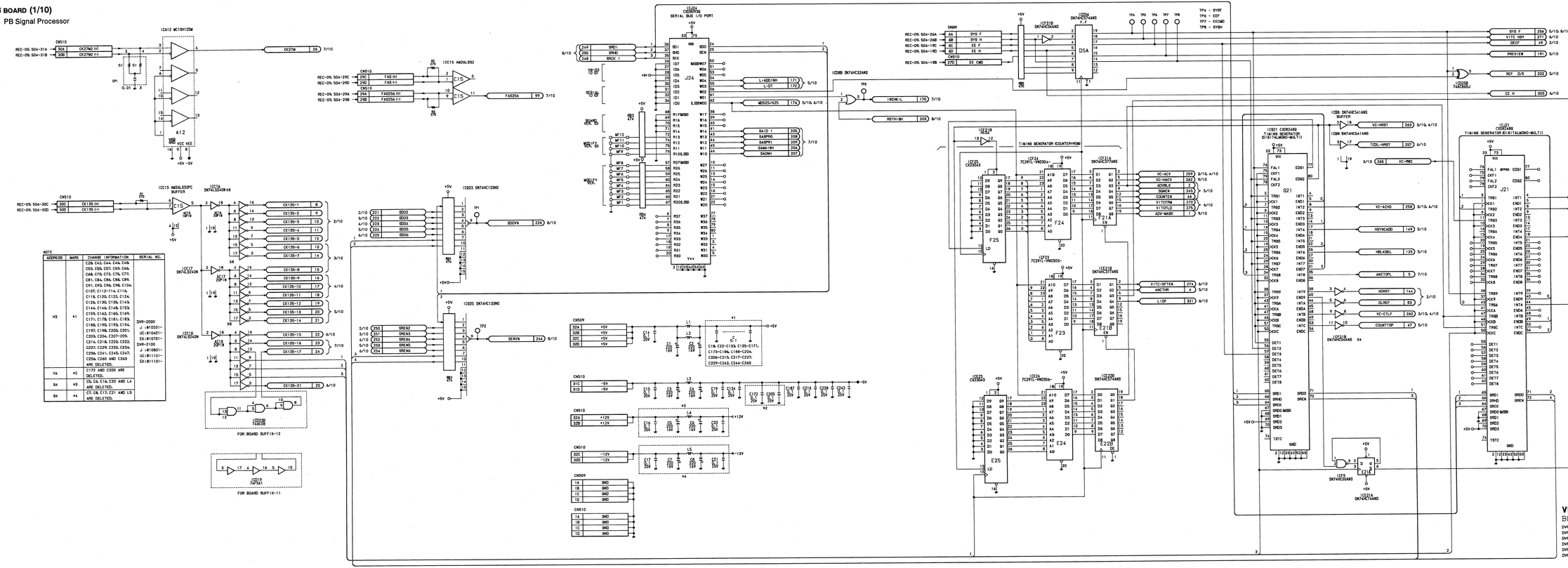

CARD RACK VN-03 (2/10) BOARD VN-03 (2/10) BOARD CARD RACK

VN-03 BOARD (2/10)

PB Signal Processor

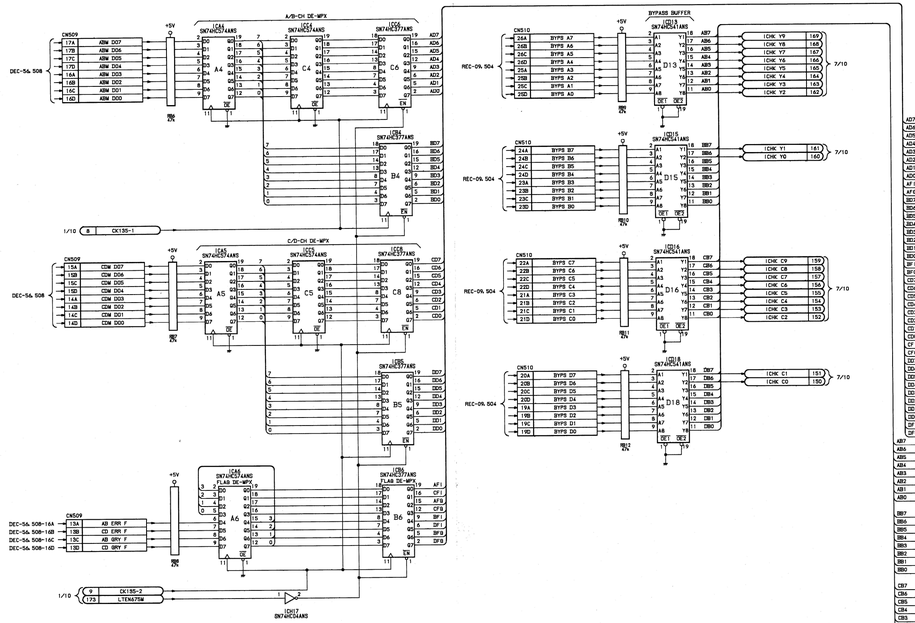

CARD RACK VN-03 (3/10) BOARD VN-03 (3/10) BOARD CARD RACK

VN-03 BOARD (3/10)

PB Signal Processor

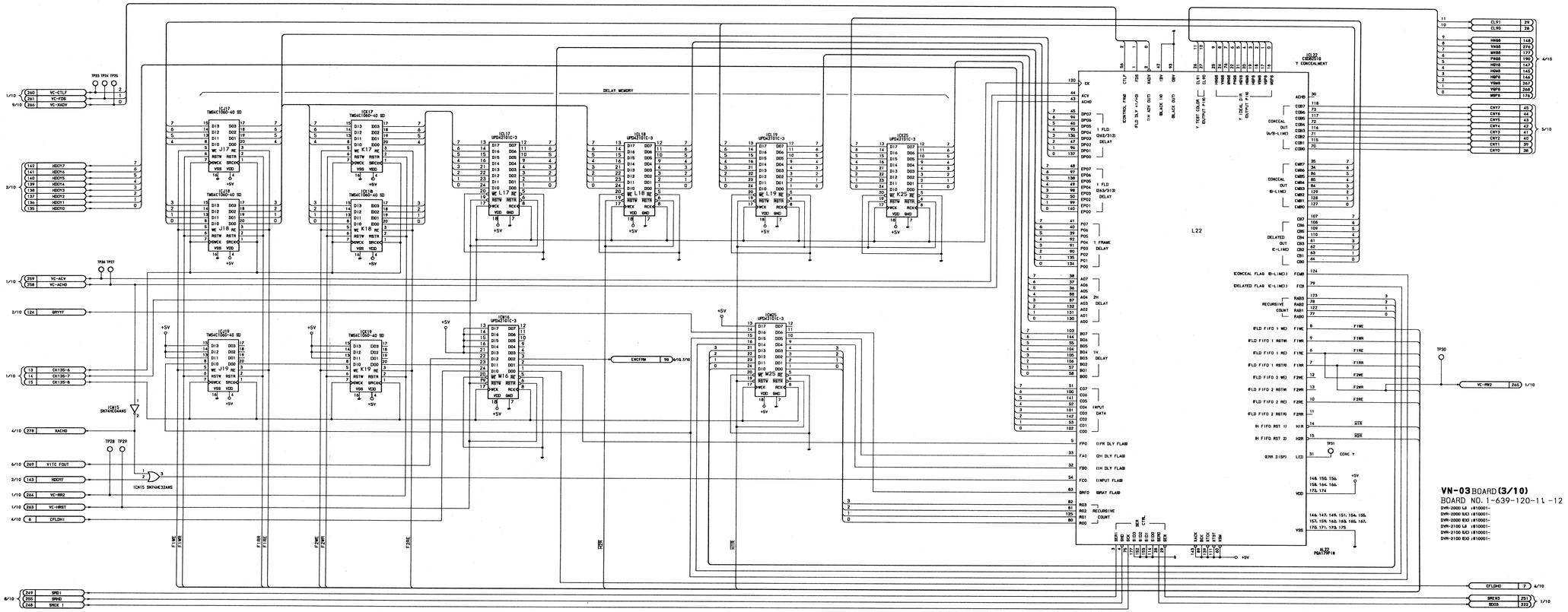

19-63

CARD RACK VN-03 (4/10) BOARD VN-03 (4/10) BOARD CARD RACK

VN-03 BOARD (4/10)

PB Signal Processor

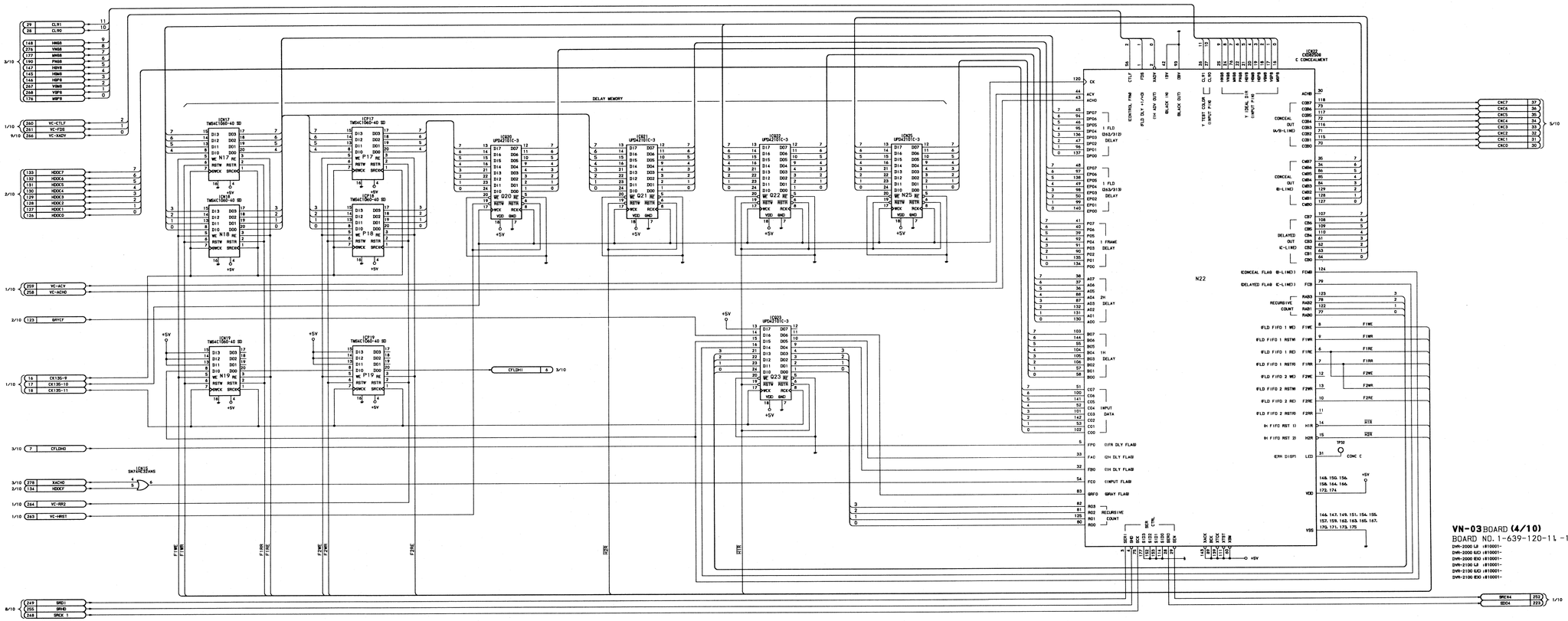

VN-03 BOARD **(4/10)**

BOARD NO. 1-639-120-11 -12

DVR-2000 LJ (#10001-
DVR-2000 EJ (#10001-
DVR-2000 EK (#10001-
DVR-2100 LJ (#10001-
DVR-2100 EJ (#10001-
DVR-2100 EK (#10001-

19-65

CARD RACK VN-03 (5/10) BOARD VN-03 (5/10) BOARD CARD RACK

VN-03 BOARD (5/10)

PB Signal Processor

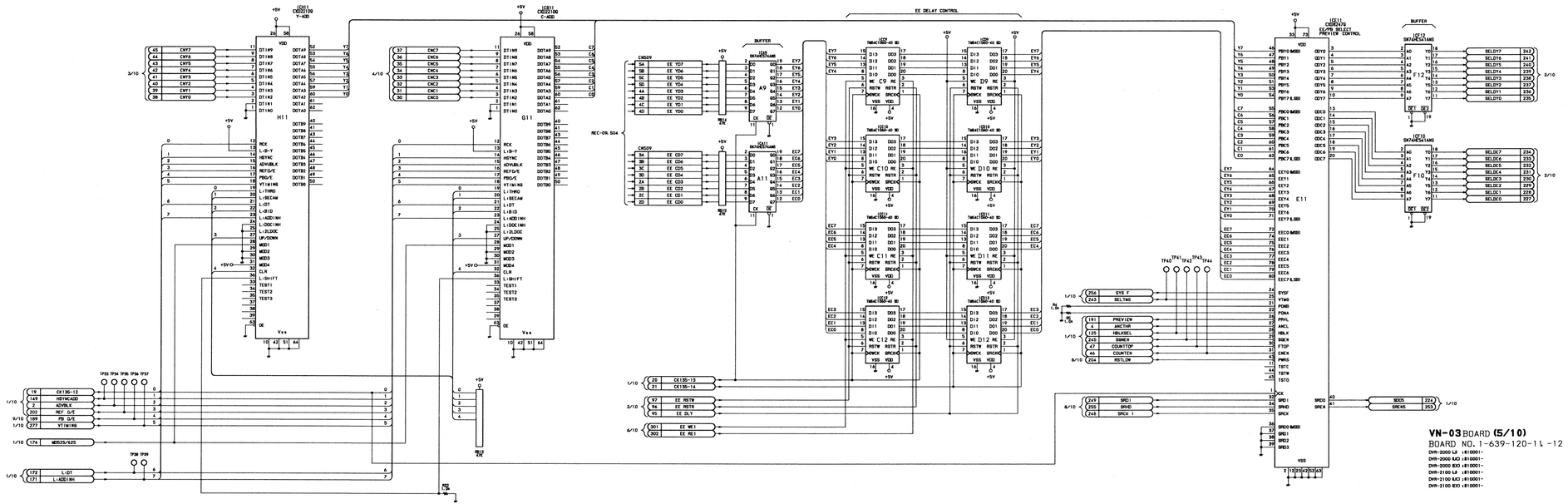

19-67

CARD RACK VN-03 (6/10) BOARD VN-03 (6/10) BOARD CARD RACK

VN-03 BOARD (6/10)

PB Signal Processor

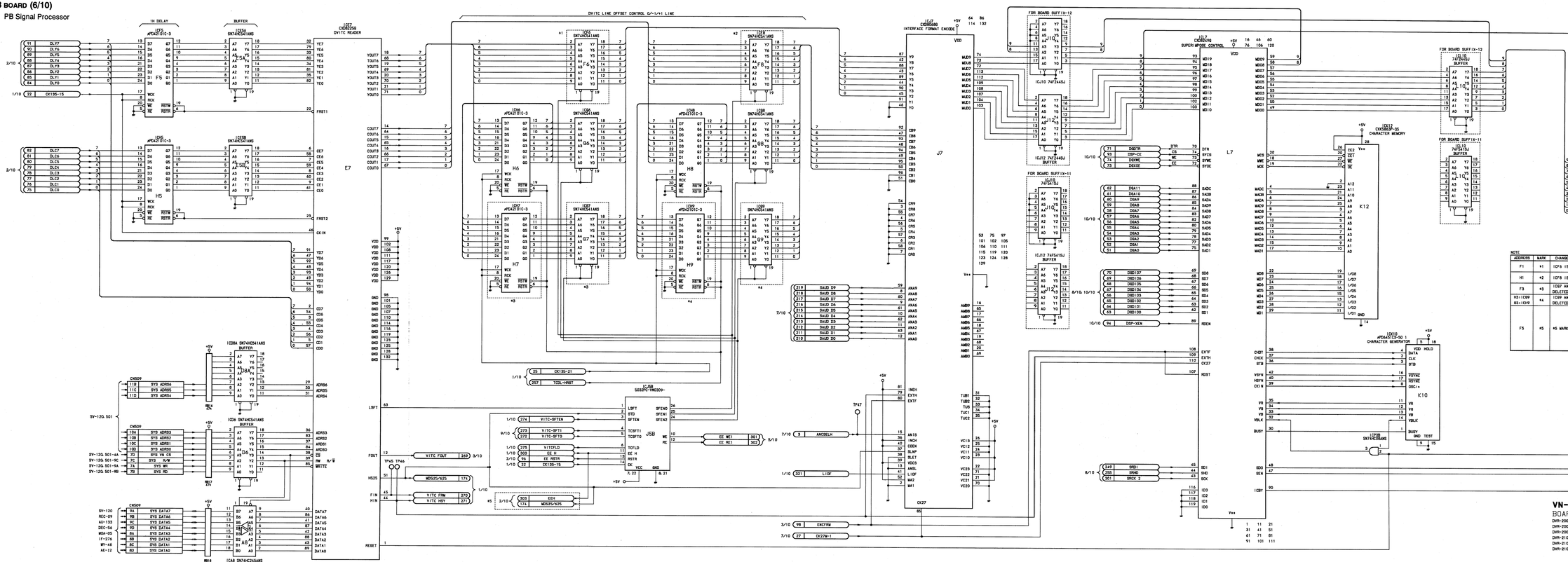

19-69

NOTE			
ADDRESS	MARK	CHANGE INFORMATION	SERIAL NO.
F1	*1	IC F5 IS DELETED.	DVR-2000 J :81B0201- UC:81B0401- EX:81B0701-
H1	*2	IC F5 IS DELETED.	DVR-2100 J :81B0001- UC:81B1101- EX:81B1201-
F3	*3	IC6F AND 1CH7 ARE DELETED.	DVR-2000 J :81B0401- UC:81B0901- EX:81B1201-
H3:1CH9 H3:1CH8	*4	1CH9 AND 1CH8 ARE DELETED.	DVR-2100 J :81B1101- UC:81B1201- EX:81B1201-
F5	*5	*5 MARK IS ADDED.	

VN-03 BOARD (6/10)

BOARD NO. 1-639-120-11 -12

DVR-2000 LJ :81B0001-
DVR-2000 EJ :81B0001-
DVR-2000 EK :81B0001-
DVR-2100 LJ :81B0001-
DVR-2100 EJ :81B0001-
DVR-2100 EK :81B0001-

CARD RACK VN-03 (7/10) BOARD VN-03 (7/10) BOARD CARD RACK

VN-03 BOARD (7/10)

PB Signal Processor

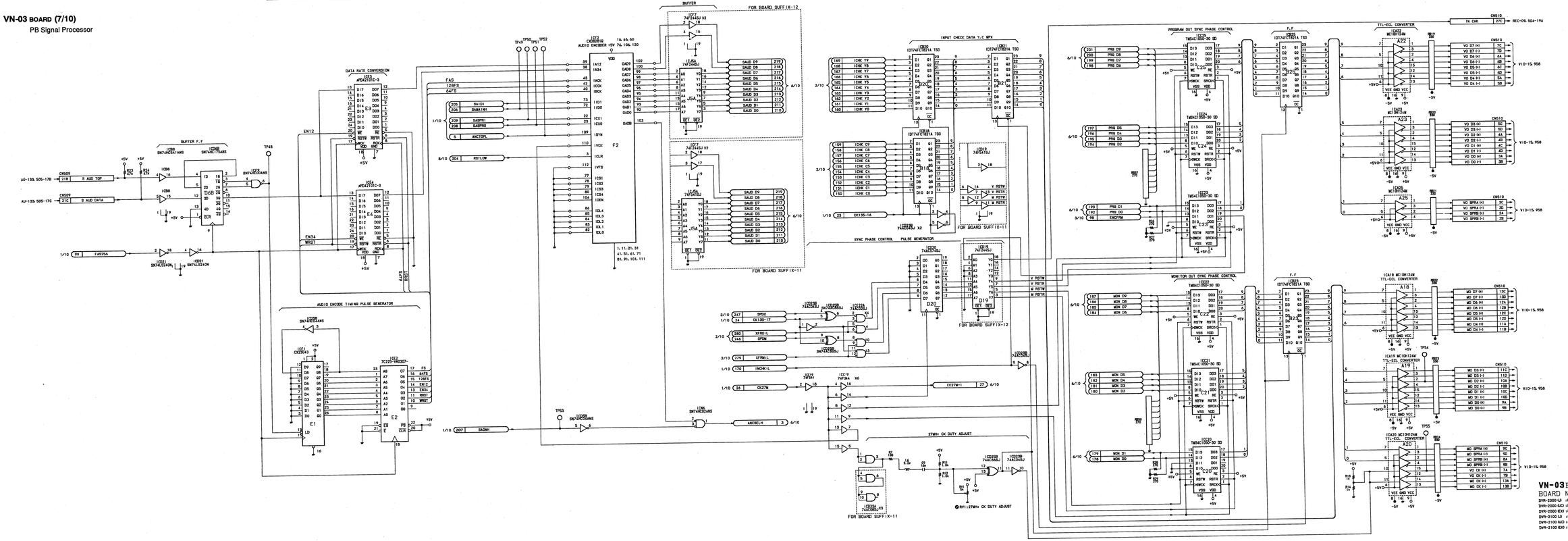

19-71

CARD RACK VN-03 (8/10) BOARD VN-03 (8/10) BOARD CARD RACK

VN-03 BOARD (8/10)

PB Signal Processor

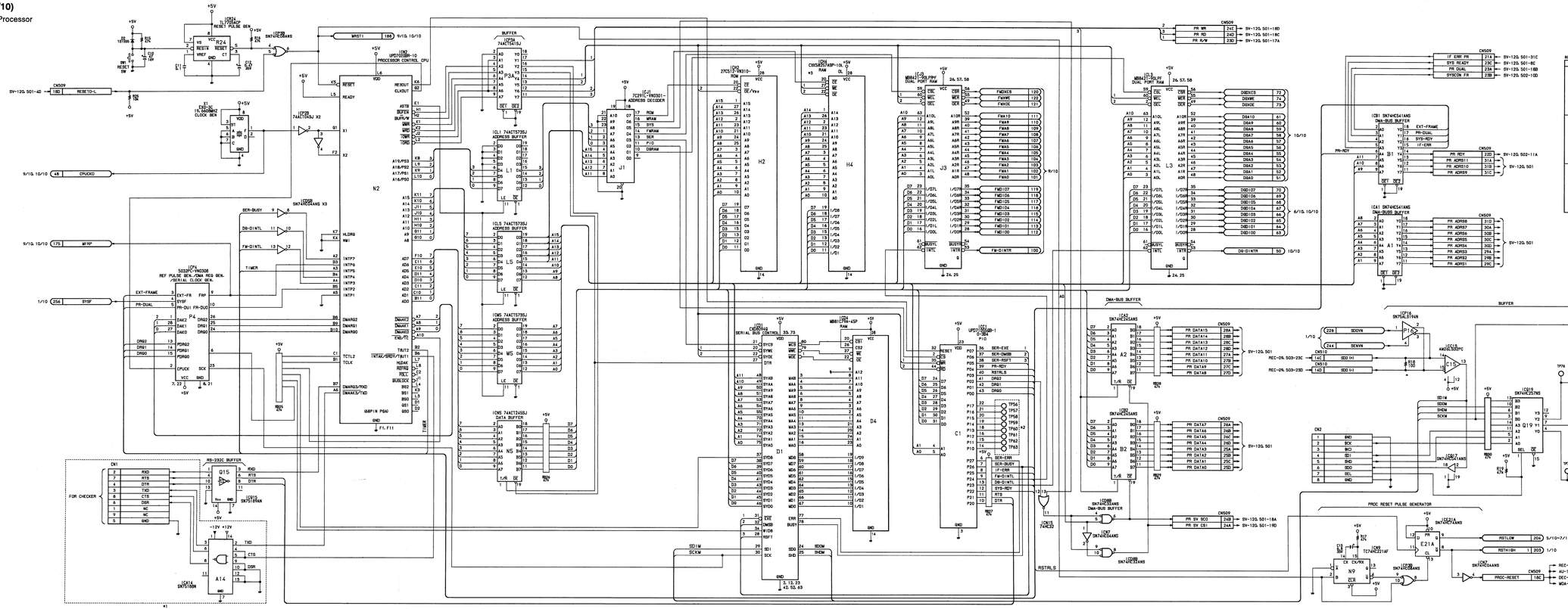

NOTE			
ADDRESS	MARK	CHANGE INFORMATION	SERIAL NO.
C5	#1	CN1 AND IC41A ARE DELETED.	DVR-2000 J :#10201- UC:#10401- EX:#10701- DVR-2100 J :#10601- UC:#11101- EX:#11201-
J4	#2	TP56~TP62 AND TP63 ARE DELETED.	DVR-2000 J :#10201- UC:#10401- EX:#10801- DVR-2100 J :#10601- UC:#11101- EX:#11101-
H1	#3	IC44:CHANGED M56225ACCL→IC44: CX536257AXP-10L	DVR-2000 J :#10401- UC:#11001- EX:#11301- DVR-2100 J :#11101- UC:#11301- EX:#11201-

VN-03 BOARD **(8/10)**

BOARD NO. 1-639-120-11 -12

DVR-2000 LJ :#10001-
DVR-2000 EJ(J) :#10001-
DVR-2000 EX(J) :#10001-
DVR-2100 LJ :#10001-
DVR-2100 EJ(J) :#10001-
DVR-2100 EX(J) :#10001-

19-73

VN-03 (9/10) BOARD CARD RACK

CARD RACK **VN-03 (9/10) BOARD**

VN-03 BOARD (9/10)

PB Signal Processor

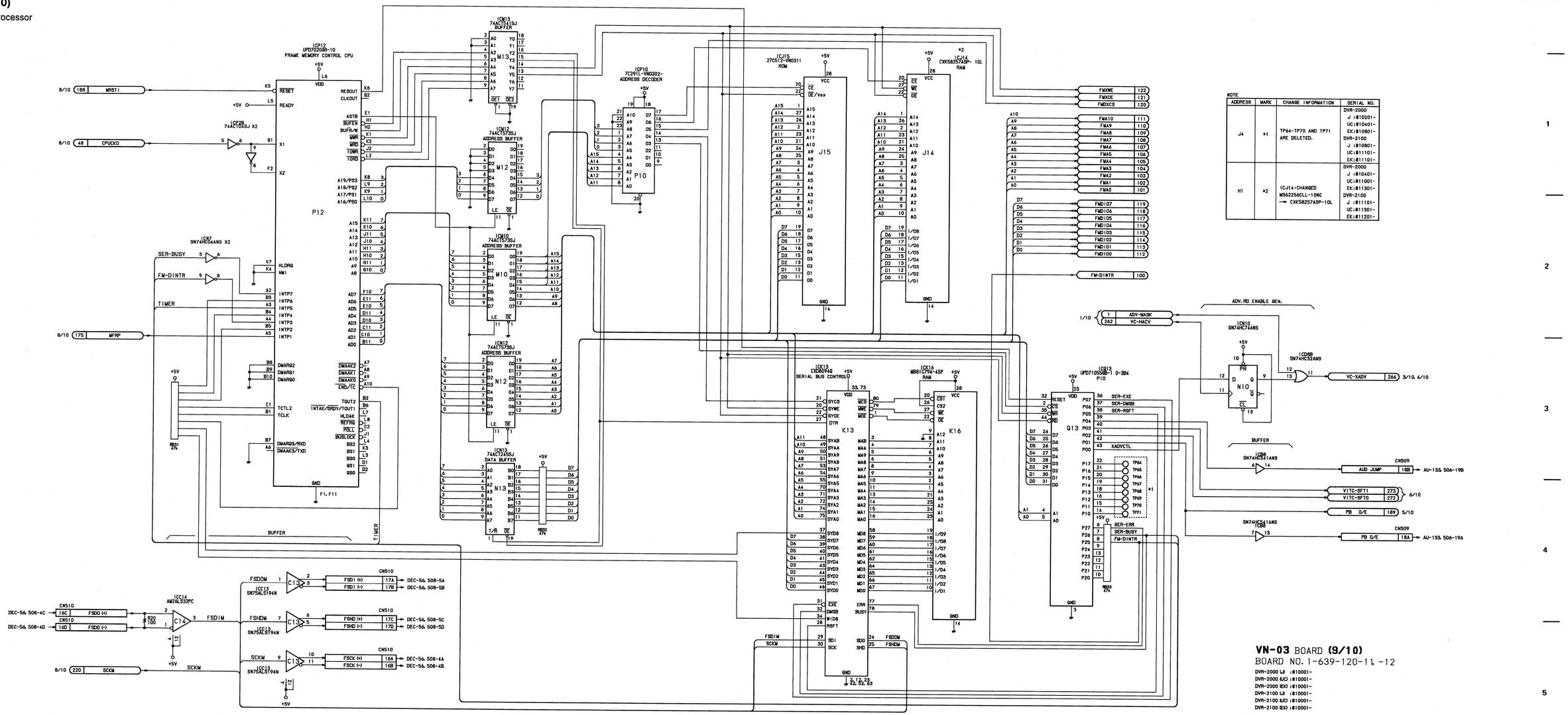

19-75

VN-03 (10/10) BOARD CARD RACK
CARD RACK VN-03 (10/10) BOARD

VN-03 BOARD (10/10)

PB Signal Processor

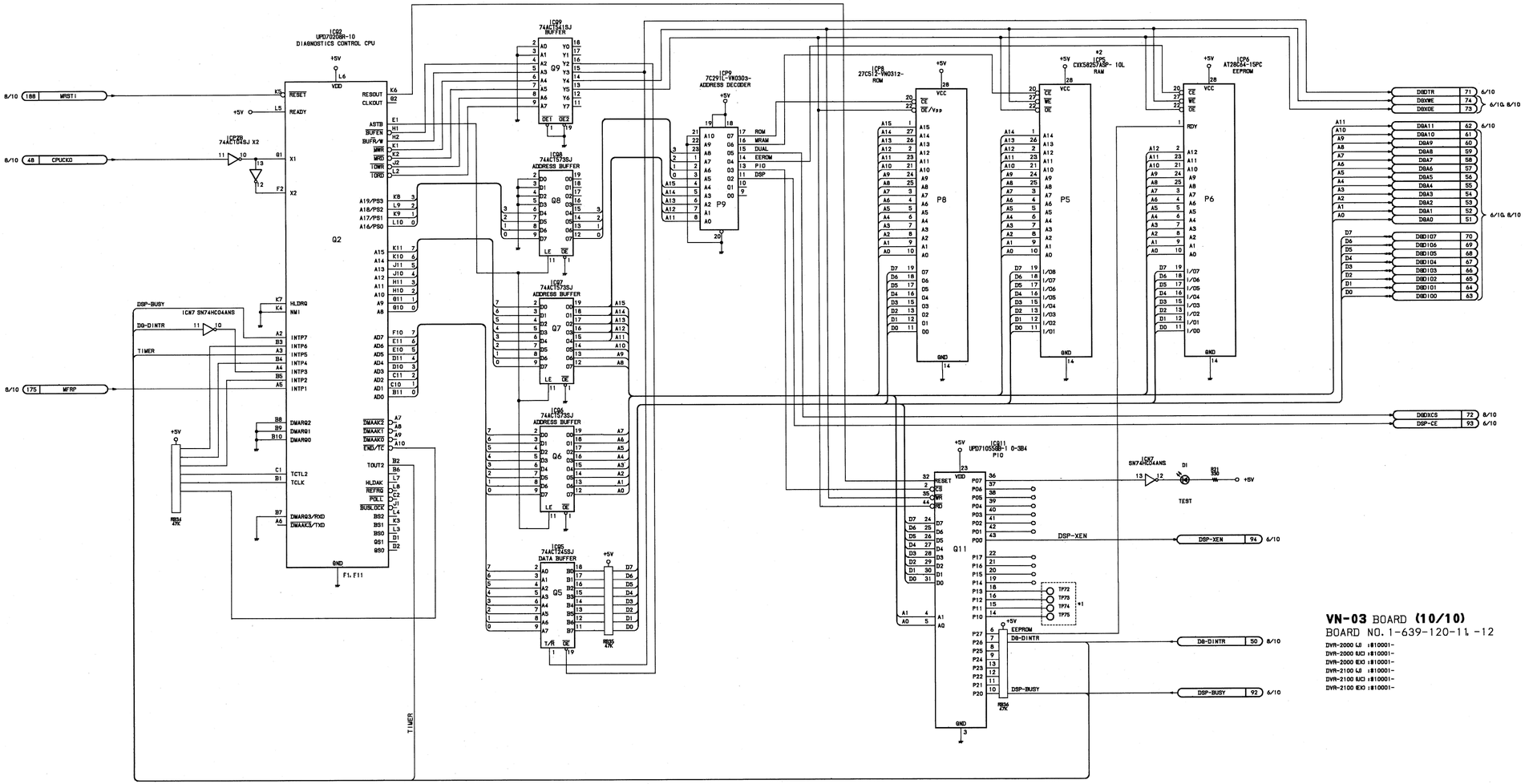

NOTE				
ADDRESS	MARK	CHANGE INFORMATION	SERIAL NO.
H4	*1	TP72-TP74 AND TP75 ARE DELETED.	DVR-2000 J :#10201- UC:#10401- EK:#10801- DVR-2100 J :#10801- UC:#11101- EK:#11101-
H1	*2	ICPS:CHANGED M562256CLL-10NC → CXK58257ASP-10L	DVR-2000 J :#10401- UC:#11001- EK:#11301- DVR-2100 J :#11101- UC:#11301- EK:#11201-

VN-03 BOARD **(10/10)**
BOARD NO. 1-639-120-11, -12

DVR-2000 LJ :#10001-
DVR-2000 EJ/CJ :#10001-
DVR-2000 EK3 :#10001-
DVR-2100 LJ :#10001-
DVR-2100 EJ/CJ :#10001-
DVR-2100 EK3 :#10001-

19-77

AU-133 BOARD (1/6)

Audio Signal Processor

DVR-2000	DVR-2100
J ; S/N 10101 and higher	J ; S/N 10401 and higher
UC ; S/N 10101 and higher	UC ; S/N 10401 and higher
EK ; S/N 10101 and higher	EK ; S/N 10401 and higher

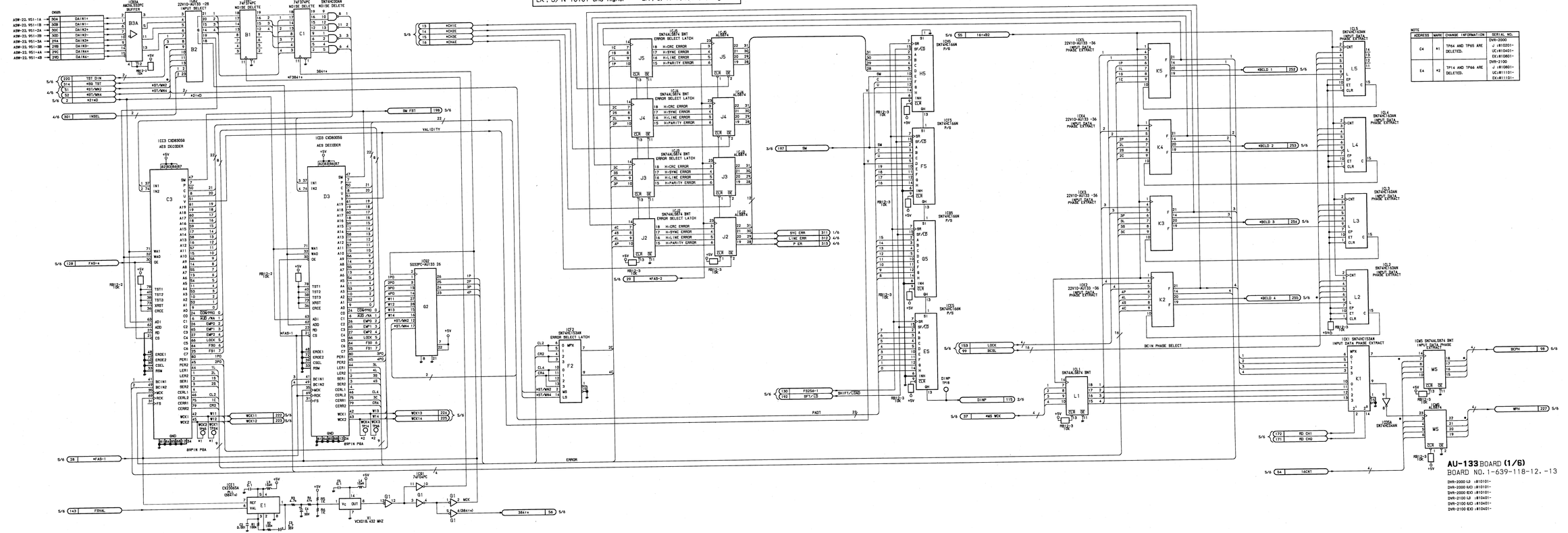

NOTE			
ADDRESS	MARK	CHANGE INFORMATION	SERIAL NO.
C4	#1	TP64 AND TP65 ARE DELETED.	DVR-2000 J :B10201- UC:B10401- EK:B10601- DVR-2100 J :B10601- UC:B11101- EK:B11101-
E4	#2	TP14 AND TP66 ARE DELETED.	

DVR-2000	DVR-2100
J : S/N 10101 and higher	J : S/N 10401 and higher
UC : S/N 10101 and higher	UC : S/N 10401 and higher
EK : S/N 10101 and higher	EK : S/N 10401 and higher

CARD RACK AU-133 (1/6) BOARD AU-133 (1/6) BOARD CARD RACK

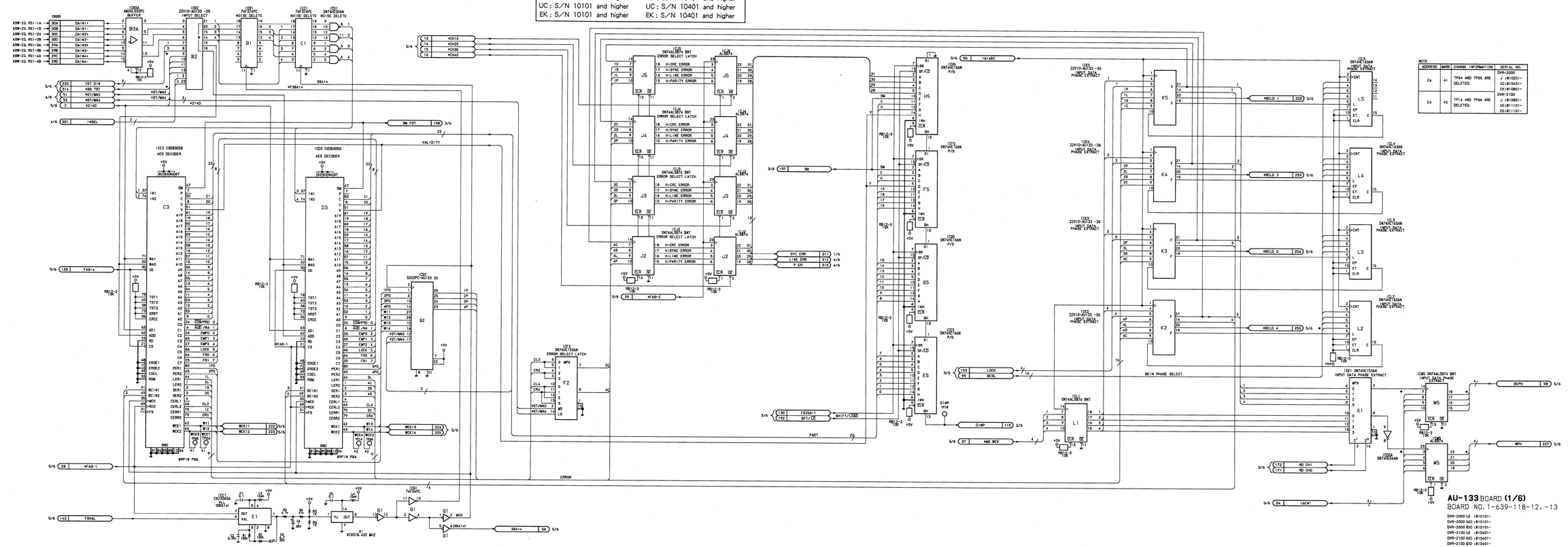
IC26A AN3436,SOPC BUFFER
IC26B 22V10-AU133 -26 INPUT SELECT
IC27 74F374PC NOISE DELETE
IC1 74F374PC NOISE DELETE
IC2 SN74HC534N NOISE DELETE
IC3 CXD8305Q AES DECODER
IC23 CXD8305Q AES DECODER
IC4 SN74AL574 8NT ERROR SELECT LATCH
IC5 SN74HC166N P/S
IC6 SN74HC153AN INPUT DATA PHASE EXTRACT
IC7 SN74AL574 8NT INPUT DATA PHASE EXTRACT
IC8 SN74HC04AN
IC9 CX23035A
IC11 74F00PC
IC12 SN74HC153AN ERROR SELECT LATCH
IC13 SN74HC153AN INPUT DATA PHASE EXTRACT
IC14 SN74HC153AN INPUT DATA PHASE EXTRACT
IC15 SN74HC153AN INPUT DATA PHASE EXTRACT
IC16 SN74HC153AN INPUT DATA PHASE EXTRACT
IC17 SN74HC153AN INPUT DATA PHASE EXTRACT
IC18 SN74HC153AN INPUT DATA PHASE EXTRACT
IC19 SN74HC153AN INPUT DATA PHASE EXTRACT
IC20 SN74HC153AN INPUT DATA PHASE EXTRACT
IC21 SN74HC153AN INPUT DATA PHASE EXTRACT
IC22 SN74HC153AN INPUT DATA PHASE EXTRACT
IC24 SN74HC04AN
IC25 SN74AL574 8NT INPUT DATA PHASE EXTRACT
IC26 SN74HC153AN INPUT DATA PHASE EXTRACT
IC27 SN74HC153AN INPUT DATA PHASE EXTRACT
IC28 SN74HC153AN INPUT DATA PHASE EXTRACT
IC29 SN74HC153AN INPUT DATA PHASE EXTRACT
IC30 SN74HC153AN INPUT DATA PHASE EXTRACT
IC31 SN74HC153AN INPUT DATA PHASE EXTRACT
IC32 SN74HC153AN INPUT DATA PHASE EXTRACT
IC33 SN74HC153AN INPUT DATA PHASE EXTRACT
IC34 SN74HC153AN INPUT DATA PHASE EXTRACT
IC35 SN74AL574 8NT INPUT DATA PHASE EXTRACT
IC36 SN74AL574 8NT INPUT DATA PHASE EXTRACT
IC37 SN74AL574 8NT INPUT DATA PHASE EXTRACT
IC38 SN74AL574 8NT INPUT DATA PHASE EXTRACT
IC39 SN74AL574 8NT INPUT DATA PHASE EXTRACT
IC40 SN74AL574 8NT INPUT DATA PHASE EXTRACT
IC41 SN74AL574 8NT INPUT DATA PHASE EXTRACT
IC42 SN74AL574 8NT INPUT DATA PHASE EXTRACT
IC43 SN74AL574 8NT INPUT DATA PHASE EXTRACT
IC44 SN74AL574 8NT INPUT DATA PHASE EXTRACT
IC45 SN74AL574 8NT INPUT DATA PHASE EXTRACT
IC46 SN74AL574 8NT INPUT DATA PHASE EXTRACT
IC47 SN74AL574 8NT INPUT DATA PHASE EXTRACT
IC48 SN74AL574 8NT INPUT DATA PHASE EXTRACT
IC49 SN74AL574 8NT INPUT DATA PHASE EXTRACT
IC50 SN74AL574 8NT INPUT DATA PHASE EXTRACT
IC51 SN74HC153AN INPUT DATA PHASE EXTRACT
IC52 SN74HC153AN INPUT DATA PHASE EXTRACT
IC53 SN74HC153AN INPUT DATA PHASE EXTRACT
IC54 SN74HC153AN INPUT DATA PHASE EXTRACT
IC55 SN74AL574 8NT INPUT DATA PHASE EXTRACT
IC56 SN74AL574 8NT INPUT DATA PHASE EXTRACT
IC57 SN74AL574 8NT INPUT DATA PHASE EXTRACT
IC58 SN74AL574 8NT INPUT DATA PHASE EXTRACT
IC59 SN74AL574 8NT INPUT DATA PHASE EXTRACT
IC60 SN74AL574 8NT INPUT DATA PHASE EXTRACT
IC61 SN74AL574 8NT INPUT DATA PHASE EXTRACT
IC62 SN74AL574 8NT INPUT DATA PHASE EXTRACT
IC63 SN74AL574 8NT INPUT DATA PHASE EXTRACT
IC64 SN74AL574 8NT INPUT DATA PHASE EXTRACT
IC65 SN74AL574 8NT INPUT DATA PHASE EXTRACT
IC66 SN74AL574 8NT INPUT DATA PHASE EXTRACT
IC67 SN74AL574 8NT INPUT DATA PHASE EXTRACT
IC68 SN74AL574 8NT INPUT DATA PHASE EXTRACT
IC69 SN74AL574 8NT INPUT DATA PHASE EXTRACT
IC70 SN74AL574 8NT INPUT DATA PHASE EXTRACT
IC71 SN74AL574 8NT INPUT DATA PHASE EXTRACT
IC72 SN74AL574 8NT INPUT DATA PHASE EXTRACT
IC73 SN74AL574 8NT INPUT DATA PHASE EXTRACT
IC74 SN74AL574 8NT INPUT DATA PHASE EXTRACT
IC75 SN74AL574 8NT INPUT DATA PHASE EXTRACT
IC76 SN74AL574 8NT INPUT DATA PHASE EXTRACT
IC77 SN74AL574 8NT INPUT DATA PHASE EXTRACT
IC78 SN74AL574 8NT INPUT DATA PHASE EXTRACT
IC79 SN74AL574 8NT INPUT DATA PHASE EXTRACT
IC80 SN74AL574 8NT INPUT DATA PHASE EXTRACT
IC81 SN74AL574 8NT INPUT DATA PHASE EXTRACT
IC82 SN74AL574 8NT INPUT DATA PHASE EXTRACT
IC83 SN74AL574 8NT INPUT DATA PHASE EXTRACT
IC84 SN74AL574 8NT INPUT DATA PHASE EXTRACT
IC85 SN74AL574 8NT INPUT DATA PHASE EXTRACT
IC86 SN74AL574 8NT INPUT DATA PHASE EXTRACT
IC87 SN74AL574 8NT INPUT DATA PHASE EXTRACT
IC88 SN74AL574 8NT INPUT DATA PHASE EXTRACT
IC89 SN74AL574 8NT INPUT DATA PHASE EXTRACT
IC90 SN74AL574 8NT INPUT DATA PHASE EXTRACT
IC91 SN74AL574 8NT INPUT DATA PHASE EXTRACT
IC92 SN74AL574 8NT INPUT DATA PHASE EXTRACT
IC93 SN74AL574 8NT INPUT DATA PHASE EXTRACT
IC94 SN74AL574 8NT INPUT DATA PHASE EXTRACT
IC95 SN74AL574 8NT INPUT DATA PHASE EXTRACT
IC96 SN74AL574 8NT INPUT DATA PHASE EXTRACT
IC97 SN74AL574 8NT INPUT DATA PHASE EXTRACT
IC98 SN74AL574 8NT INPUT DATA PHASE EXTRACT
IC99 SN74AL574 8NT INPUT DATA PHASE EXTRACT
IC100 SN74AL574 8NT INPUT DATA PHASE EXTRACT
IC101 SN74HC153AN INPUT DATA PHASE EXTRACT
IC102 SN74HC153AN INPUT DATA PHASE EXTRACT
IC103 SN74HC153AN INPUT DATA PHASE EXTRACT
IC104 SN74HC153AN INPUT DATA PHASE EXTRACT
IC105 SN74HC153AN INPUT DATA PHASE EXTRACT
IC106 SN74HC153AN INPUT DATA PHASE EXTRACT

AU-133 BOARD (1/6)

Audio Signal Processor

CARD RACK **AU-133 (1/6) BOARD** — **AU-133 (1/6) BOARD** CARD RACK

DVR-2000	DVR-2100
J : S/N 10001 through 10099	J : S/N 10001 through 10399
UC : S/N 10001 through 10099	UC : S/N 10001 through 10399
EK : S/N 10001 through 10099	EK : S/N 10001 through 10399

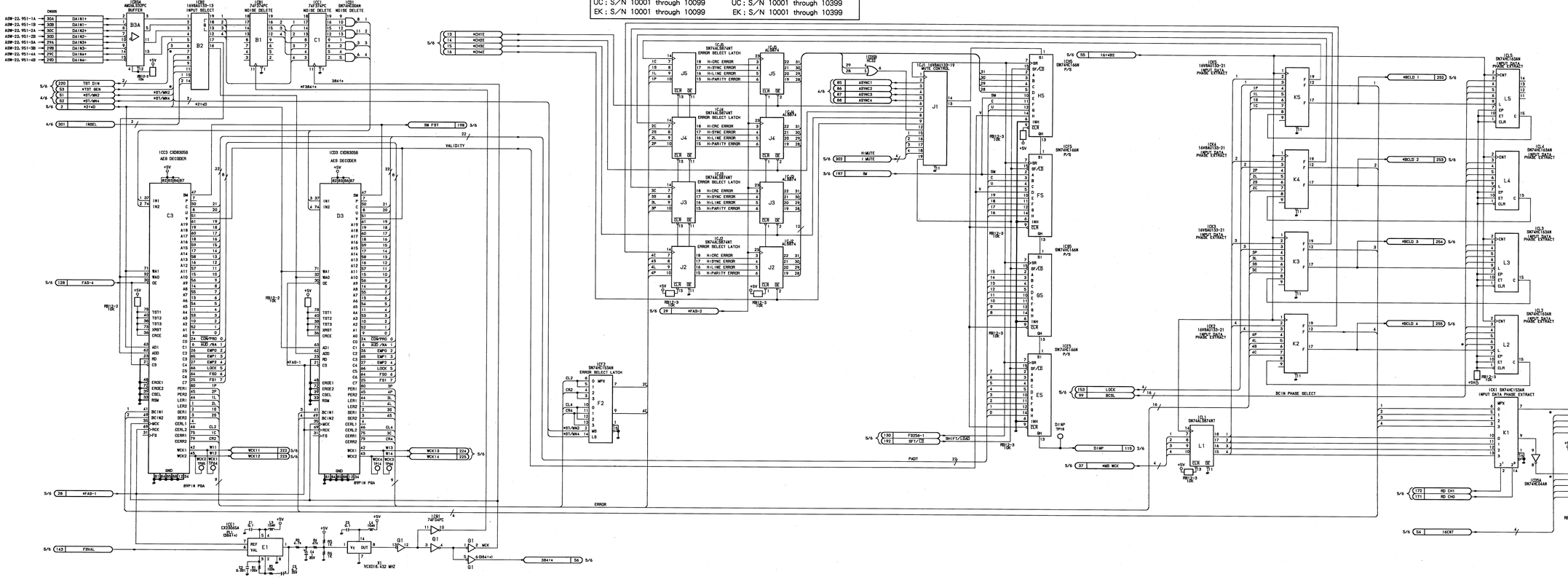

AU-133 BOARD **(1/6)**
BOARD NO. 1-639-118-11
DVR-2000 LU :#10001~10099
DVR-2000 UCJ :#10001~10099
DVR-2000 EQU :#10001~10099
DVR-2100 LU :#10001~10399
DVR-2100 UCJ :#10001~10399
DVR-2100 EQU :#10001~10399

19-79 (a)

19-79 (a)

DVR-2000	DVR-2100
J : S/N 10101 and higher	J : S/N 10401 and higher
UC : S/N 10101 and higher	UC : S/N 10401 and higher
EK : S/N 10101 and higher	EK : S/N 10401 and higher

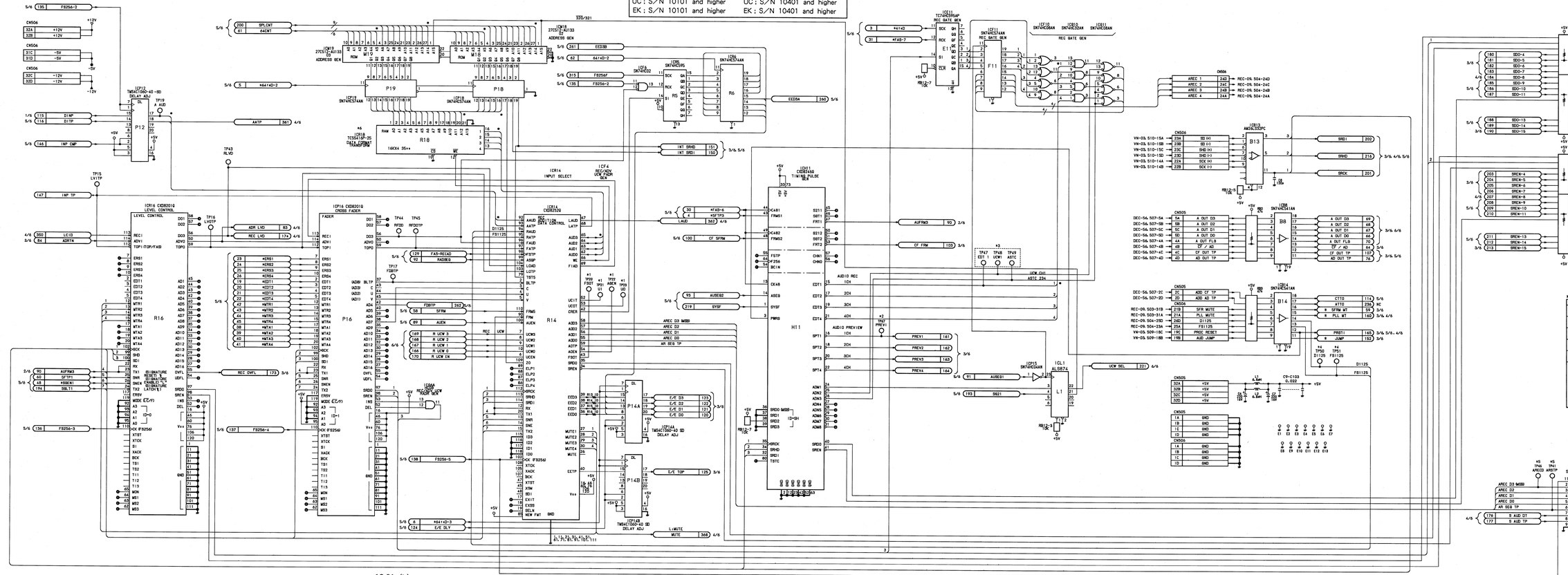
CN506
CN505
CN506
CN506
CN505
CN505
CN505
CN505
CN506
CN506
CN506

DVR-2000	DVR-2100
J : S/N 10001 through 10099	J : S/N 10001 through 10399
UC : S/N 10001 through 10099	UC : S/N 10001 through 10399
EK : S/N 10001 through 10099	EK : S/N 10001 through 10399

CARD RACK AU-133 (2/6) BOARD AU-133 (2/6) BOARD CARD RACK

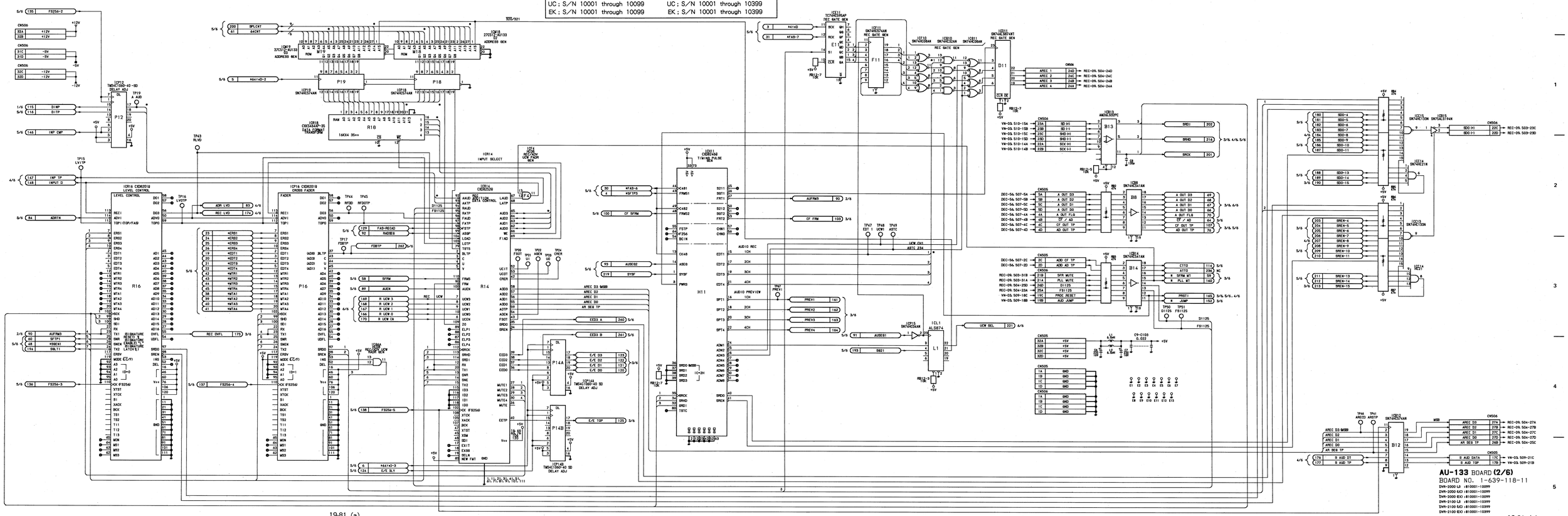

AU-133 BOARD (3/6)

Audio Signal Processor

DVR-2000	DVR-2100
J ; S/N 10101 and higher	J ; S/N 10401 and higher
UC ; S/N 10101 and higher	UC ; S/N 10401 and higher
EK ; S/N 10101 and higher	EK ; S/N 10401 and higher

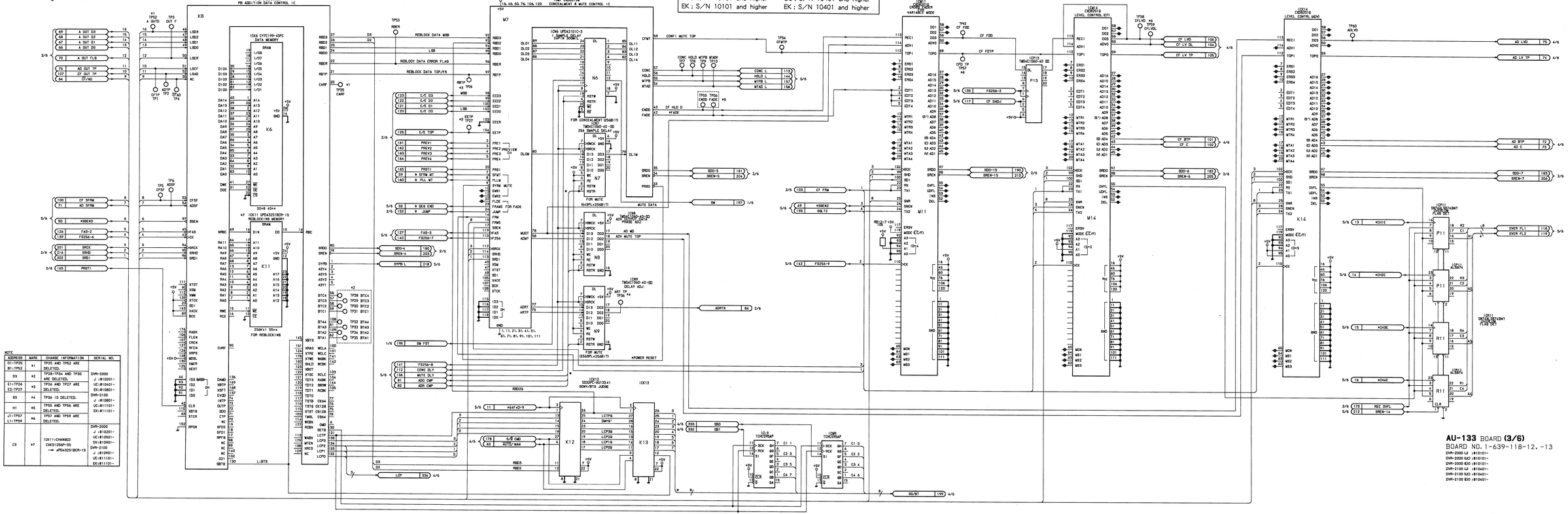
IC65 CXD2538Q
PB ADDITION DATA CONTROL IC
IC66 CY7C199-45PC
DATA MEMORY
SRAM
IC11 UPD43257B3CR-15
REBLOCKING MEMORY
SRAM
IC67 CXD2372Q
CONCEALMENT & MUTE CONTROL IC
IC66 UPD4201C-3
1-SAMPLE DELAY
2-SAMPLE DELAY
IC61 CXD2372Q
VARI-SPEED
VARI-RATE MODE
IC14 CXD2372Q
LEVEL CONTROL (EF)
IC14 CXD2372Q
LEVEL CONTROL (ADV)
IC12 SG3270C-AU13341
SONY/RTS JUDGE
IC13
IC10 TC74HC595AP
IC9 TC74HC595AP
IC8 TC74HC595AP
IC7 TC74HC595AP
IC6 TC74HC595AP
IC5 TC74HC595AP
IC4 TC74HC595AP
IC3 TC74HC595AP
IC2 TC74HC595AP
IC1 TC74HC595AP
IC13 TC74HC595AP
IC12 TC74HC595AP
IC11 TC74HC595AP

AU-133 BOARD (3/6)

Audio Signal Processor

DVR-2000	DVR-2100
J ; S/N 10001 through 10099	J ; S/N 10001 through 10399
UC ; S/N 10001 through 10099	UC ; S/N 10001 through 10399
EK ; S/N 10001 through 10099	EK ; S/N 10001 through 10399

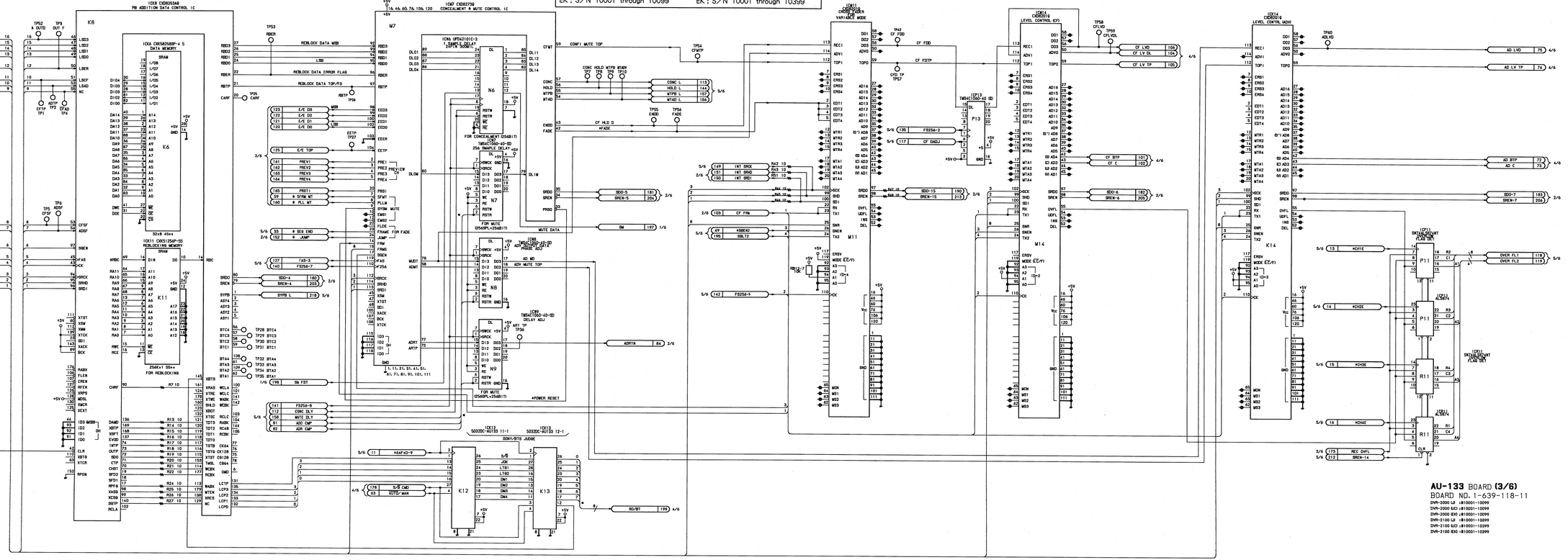

AU-133 BOARD **(3/6)**
BOARD NO. 1-639-118-11
DVR-2000 UJ :#10001-10099
DVR-2000 EJ :#10001-10099
DVR-2000 EK :#10001-10099
DVR-2100 UJ :#10001-10399
DVR-2100 EJ :#10001-10399
DVR-2100 EK :#10001-10399

19-83 (a)

CARD RACK AU-133 (4/6) BOARD AU-133 (4/6) BOARD CARD RACK

AU-133 BOARD (4/6)

Audio Signal Processor

DVR-2000	DVR-2100
J ; S/N 10101 and higher	J ; S/N 10401 and higher
UC ; S/N 10101 and higher	UC ; S/N 10401 and higher
EK ; S/N 10101 and higher	EK ; S/N 10401 and higher

NOTE

ADDRESS	MARK	CHANGE INFORMATION	SERIAL NO.
L4	+1	TP4L-TP62 AND TP63 ARE DELETED.	DVR-2000 J :810201- UC:810401- EK:810601- DVR-2100 J :810801- UC:811101- EK:811101-

TST1	TST2	MODE
ON	ON	BTS (MANUAL)
ON	OFF	SONY (MANUAL)
OFF	ON/OFF	AUTO

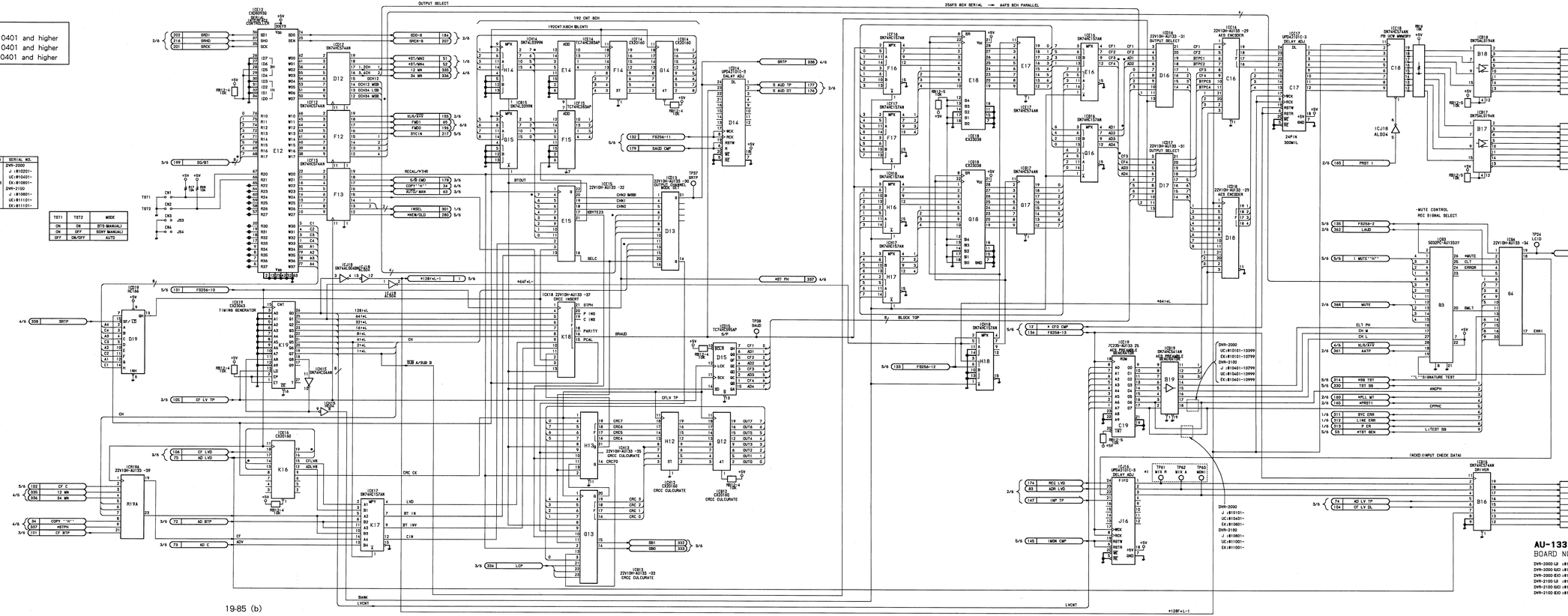

AU-133 BOARD **(4/6)**

BOARD NO. 1-639-118-12, -13

DVR-2000 LB :810101-
DVR-2000 EXD :810101-
DVR-2000 EKD :810101-
DVR-2100 LB :810401-
DVR-2100 EXD :810401-
DVR-2100 EKD :810401-

19-85 (b)

CARD RACK AU-133 (4/6) BOARD AU-133 (4/6) BOARD CARD RACK

AU-133 BOARD (4/6)

Audio Signal Processor

DVR:2000	DVR:2100
J ; S/N 10001 through 10099	J ; S/N 10001 through 10399
UC ; S/N 10001 through 10099	UC ; S/N 10001 through 10399
EK ; S/N 10001 through 10099	EK ; S/N 10001 through 10399

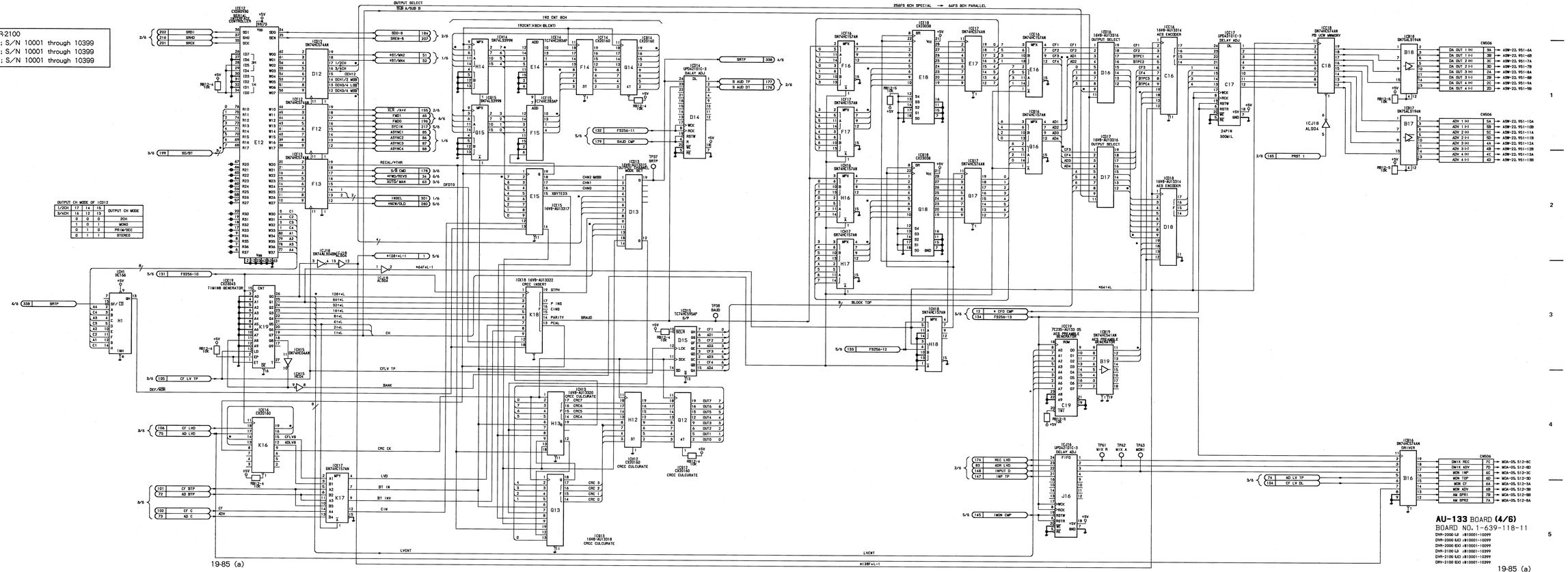

CARD RACK AU-133 (5/6) BOARD AU-133 (5/6) BOARD CARD RACK

AU-133 BOARD (5/6)

Audio Signal Processor

DVR-2000	DVR-2100
J : S/N 10101 and higher	J : S/N 10401 and higher
UC : S/N 10101 and higher	UC : S/N 10401 and higher
EK : S/N 10101 and higher	EK : S/N 10401 and higher

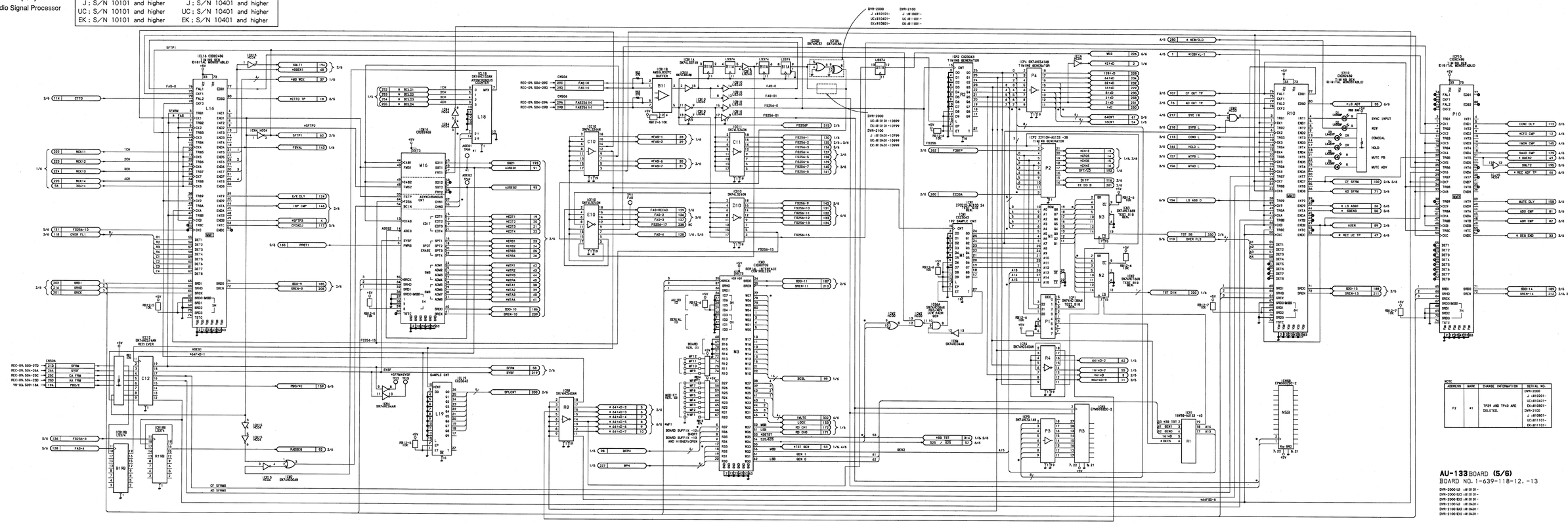
DVR-2000
J :#10101-
UC:#10401-
EK:#10601-
DVR-2100
J :#10801-
UC:#11101-
EK:#11301-
DVR-2000
UC:#10101-:#10399
EK:#10101-:#10799
DVR-2100
UC:#10401-:#10999
EK:#10401-:#10999
DVR-2000
J :#10401-:#10799
UC:#10601-:#10999
EK:#10601-:#10999
IC L16 CXD2249
IC L18 CXD2249
IC M16 CXD2249
IC B11 M51953B-2
IC C11 SN74LS374
IC C10 SN74LS374
IC D10 SN74LS374
IC M3 CXD2249
IC P4 SN74HC541AB
IC P2 SN74HC541AB
IC P3 SN74HC541AB
IC R4 SN74HC541AB
IC R3 EPM7032SC-2
IC R1 14F89-A0139
IC R10 CXD2249
IC P10 CXD2249
IC C12 SN74HC244AN
IC R8 SN74HC244AN
IC N2 SN74HC168AN
IC N3 SN74HC168AN
IC M1 CXD2249
IC L19 CXD2249
IC L14 CXD2249
IC L15 CXD2249
IC L17 CXD2249
IC L13 CXD2249
IC L12 CXD2249
IC L11 CXD2249
IC L10 CXD2249
IC L9 CXD2249
IC L8 CXD2249
IC L7 CXD2249
IC L6 CXD2249
IC L5 CXD2249
IC L4 CXD2249
IC L3 CXD2249
IC L2 CXD2249
IC L1 CXD2249
IC N1 EPM7032SC-2
IC N5B EPM7032SC-2
IC P1 SN74HC541AB
IC P5 SN74HC541AB
IC P6 SN74HC541AB
IC P7 SN74HC541AB
IC P8 SN74HC541AB
IC P9 SN74HC541AB
IC P11 SN74HC541AB
IC P12 SN74HC541AB
IC P13 SN74HC541AB
IC P14 SN74HC541AB
IC P15 SN74HC541AB
IC P16 SN74HC541AB
IC P17 SN74HC541AB
IC P18 SN74HC541AB
IC P19 SN74HC541AB
IC P20 SN74HC541AB
IC P21 SN74HC541AB
IC P22 SN74HC541AB
IC P23 SN74HC541AB
IC

CARD RACK AU-133 (5/6) BOARD AU-133 (5/6) BOARD CARD RACK

AU-133 BOARD (5/6)

Audio Signal Processor

DVR-2000	DVR-2100
J : S/N 10001 through 10099	J : S/N 10001 through 10399
UC : S/N 10001 through 10099	UC : S/N 10001 through 10399
EK : S/N 10001 through 10099	EK : S/N 10001 through 10399

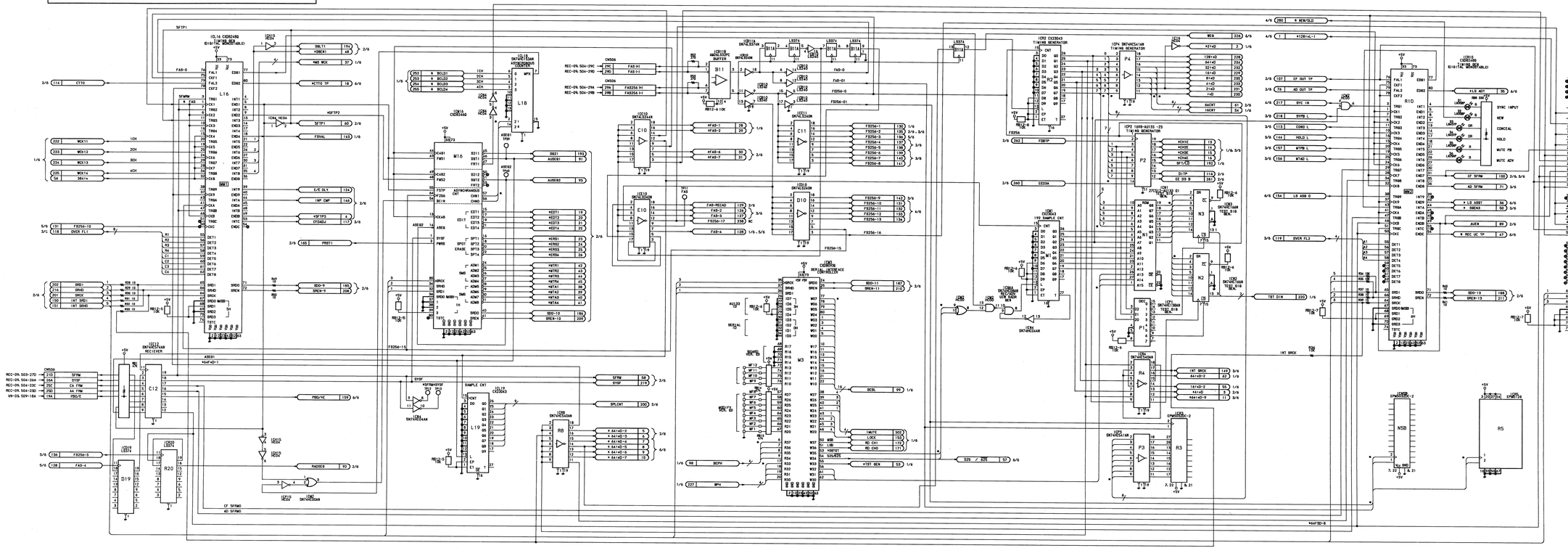

AU-133 BOARD (5/6)
BOARD NO. 1-639-118-11

DVR-2000 LA : #10001~10099
DVR-2000 EK1 : #10001~10099
DVR-2000 EK2 : #10001~10099
DVR-2100 LA : #10001~10399
DVR-2100 EK1 : #10001~10399
DVR-2100 EK2 : #10001~10399

19-87 (a)

CARD RACK AU-133 (6/6) BOARD

AU-133 BOARD (6/6)

Audio Signal Processor

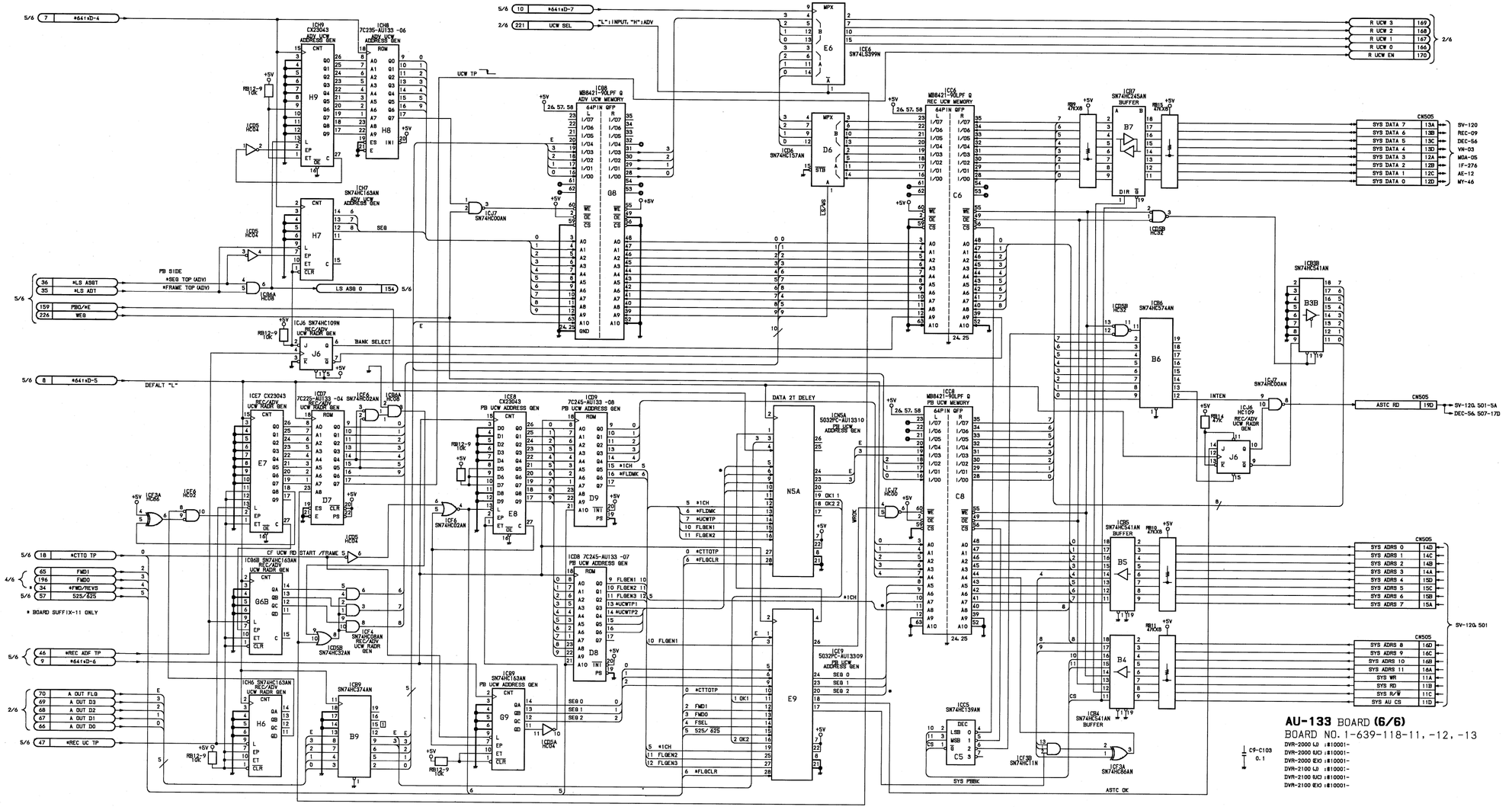

19-89

AE-12 (1/2) BOARD CARD RACK

CARD RACK **AE-12 (1/2) BOARD**

AE-12 BOARD (1/2)

Longitudinal Processor

NOTE

ADDRESS	MARK	CHANGED INFORMATION	SERIAL NO.
D4	*1	IC200 AND C209 ARE DELETED.	
D4	*2	IC202 AND C214 ARE DELETED.	DVR-2000 J :#10201- UC:#10301- EK:#10601-
I1	*3	C115 AND C116 ARE DELETED.	DVR-2100 J :#11001- UC:#11101- EK:#11101-
J1	*4	JP1, JP2, JS1 AND C150 ARE ADDED.	
I4	*5	C134 AND C135 ARE DELETED.	
J4	*6	JP3, JP4, JS2 AND C151 ARE ADDED.	
B4	*7	C103 AND C104 ARE DELETED.	
F1	*8	C136, C137:CHANGED 0.1→0.022	DVR-2000 J :#10201- UC:#10401- EK:#10801-
D3	*9	C202, C205, C208: CHANGED 0.1→0.022	DVR-2100 J :#10801- UC:#11101- EK:#11101-
D4	*10	C213:CHANGED 0.1→0.022	
B3	*11	C258 AND C259 ARE DELETED.	
D4	*12	IC201:CHANGED RC78L09A→NJM78L06A	

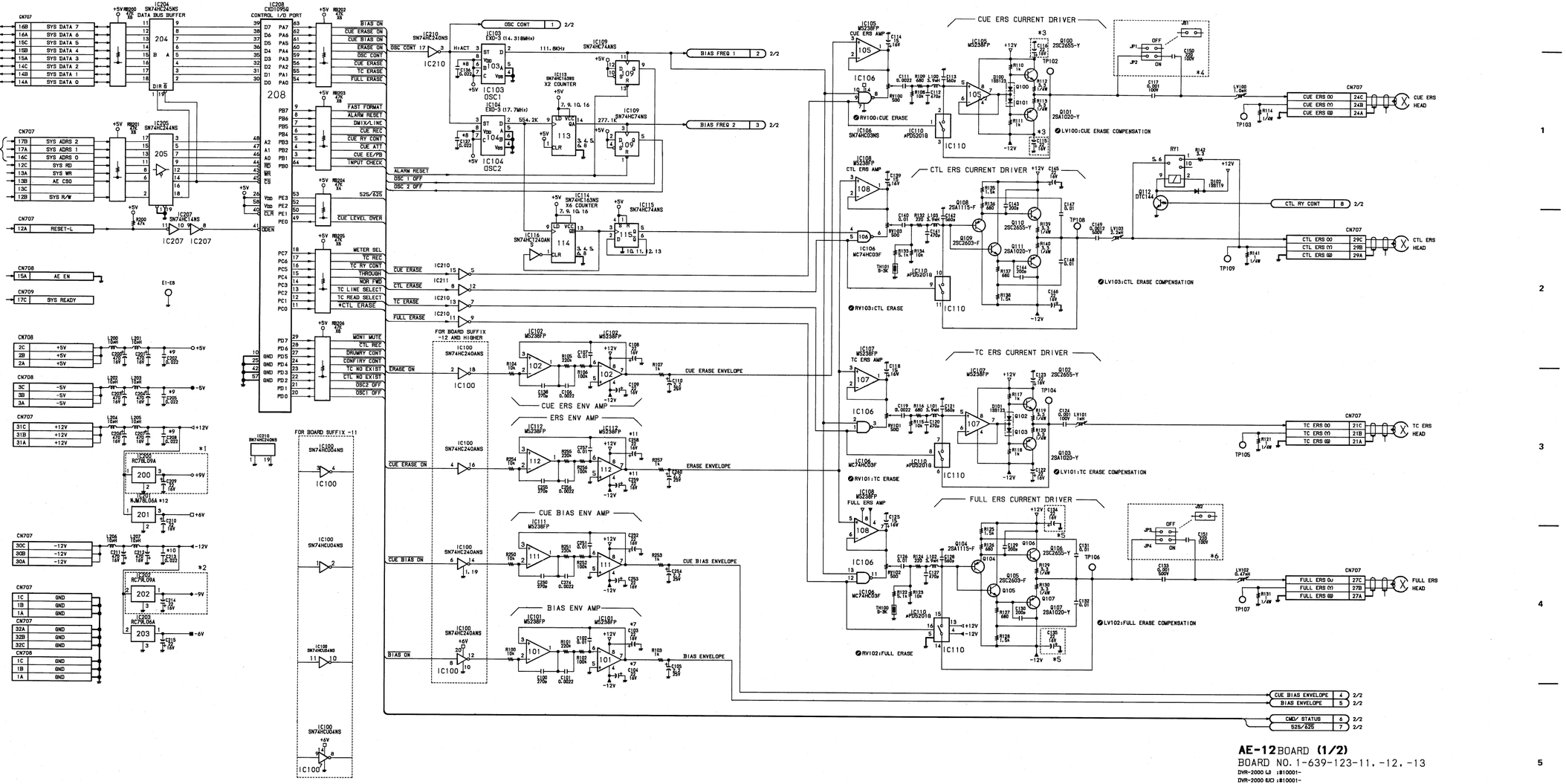

AE-12 BOARD **(1/2)**

BOARD NO. 1-639-123-11, -12, -13

DVR-2000 LJ :#10001-
DVR-2000 UJC :#10001-
DVR-2000 EKO :#10001-
DVR-2100 LJ :#10001-
DVR-2100 UJC :#10001-
DVR-2100 EKO :#10001-

DUS-481 CARD RACK **AE-12 (2/2) BOARD** **AE-12 (2/2) BOARD** CARD RACK DUS-481

AE-12 BOARD (2/2)

Longitudinal Processor

DVR-2000	DVR-2100
J : S/N 10101 and higher	J : S/N 10401 and higher
UC : S/N 10101 and higher	UC : S/N 10401 and higher
EK : S/N 10101 and higher	EK : S/N 10401 and higher

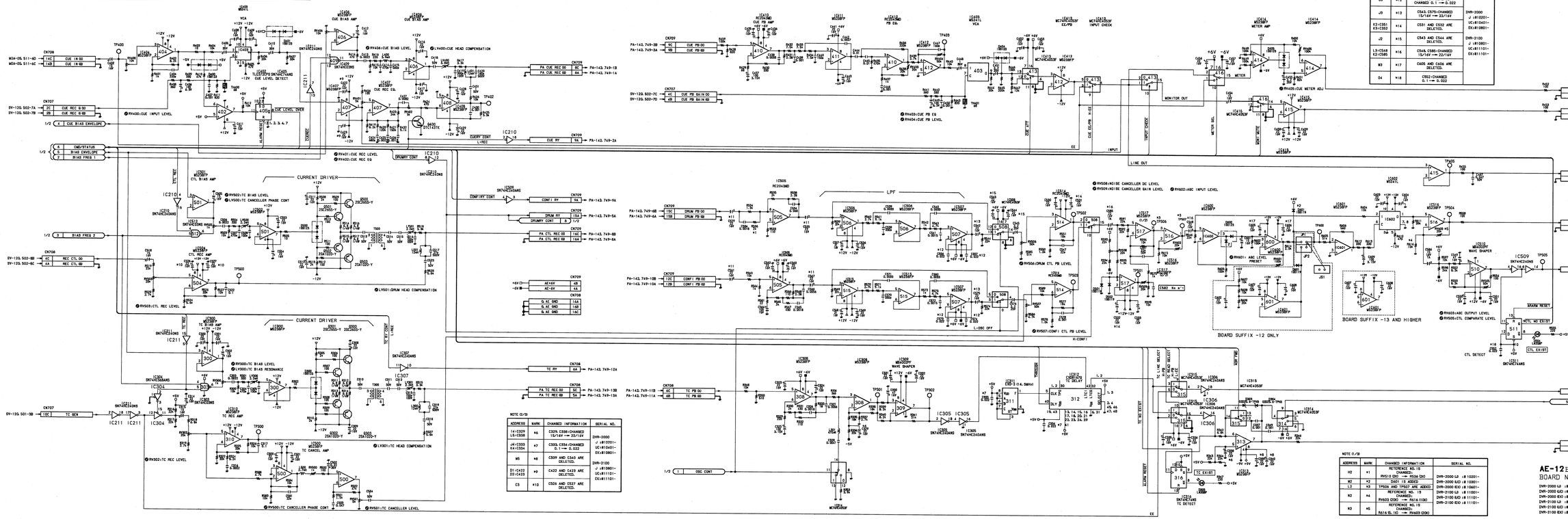

NOTE (2/3)

ADDRESS	MARK	CHANGED INFORMATION	SERIAL NO.
H3	#11	C529, C535, C541, C547: CHANGED 15/16V → 22/16V	
J3	#12	C556, C563, C573, C574: CHANGED 0.1 → 0.022	
J3	#13	C543, C575: CHANGED 15/16V → 22/16V	DVR-2000 J :#10201- UC:#10401- EK:#10601-
K2:C551 K3:C552	#14	C551 AND C552 ARE DELETED.	
J2	#15	C543 AND C544 ARE DELETED.	DVR-2100 J :#10601- UC:#11101- EK:#11101-
L3:C548 K2:C585	#16	C548, C585: CHANGED 15/16V → 22/16V	
M3	#17	C605 AND C606 ARE DELETED.	
O4	#18	C552: CHANGED 0.1 → 0.022	

NOTE (2/3)

ADDRESS	MARK	CHANGED INFORMATION	SERIAL NO.
I4:C329 L5:C358	#6	C329, C358: CHANGED 15/16V → 22/16V	DVR-2000 J :#10201- UC:#10401- EK:#10601-
J4:C333 K4:C334	#7	C333, C334: CHANGED 0.1 → 0.022	
M5	#8	C339 AND C340 ARE DELETED.	DVR-2100 J :#10601- UC:#11101- EK:#11101-
D1:C422 D3:C429	#9	C422 AND C429 ARE DELETED.	
C3	#10	C526 AND C527 ARE DELETED.	

NOTE (1/3)

ADDRESS	MARK	CHANGED INFORMATION	SERIAL NO.
H2	#1	REFERENCE NO.18 CHANGED: RV512 (20) → R536 (20)	DVR-2000 LB :#10201- DVR-2000 EKD :#10201- DVR-2000 EKO :#10201- DVR-2100 LB :#10401- DVR-2100 EKD :#10401- DVR-2100 EKO :#10401-
H2	#2	D601 IS ADDED	
L2	#3	TP506 AND TP507 ARE ADDED	
N2	#4	REFERENCE NO. 18 CHANGED: RV603 (20) → R616 (100)	DVR-2000 LB :#10201- DVR-2000 EKD :#10601- DVR-2100 LB :#11001- DVR-2100 EKD :#11101- DVR-2100 EKO :#11101-
N2	#5	REFERENCE NO. 18 CHANGED: R616 (5.1K) → RV603 (20K)	

AE-12 BOARD **(2/2)**
BOARD NO. 1-639-123-12, -13

DVR-2000 LB :#10101-
DVR-2000 EKD :#10101-
DVR-2000 EKO :#10101-
DVR-2100 LB :#10401-
DVR-2100 EKD :#10401-
DVR-2100 EKO :#10401-

19-93 (b)

AE-12 BOARD (2/2)

Longitudinal Processor

DVR-2000	DVR-2100
J : S/N 10001 through 10099	J : S/N 10001 through 10399
UC : S/N 10001 through 10099	UC : S/N 10001 through 10399
EK : S/N 10001 through 10099	EK : S/N 10001 through 10399

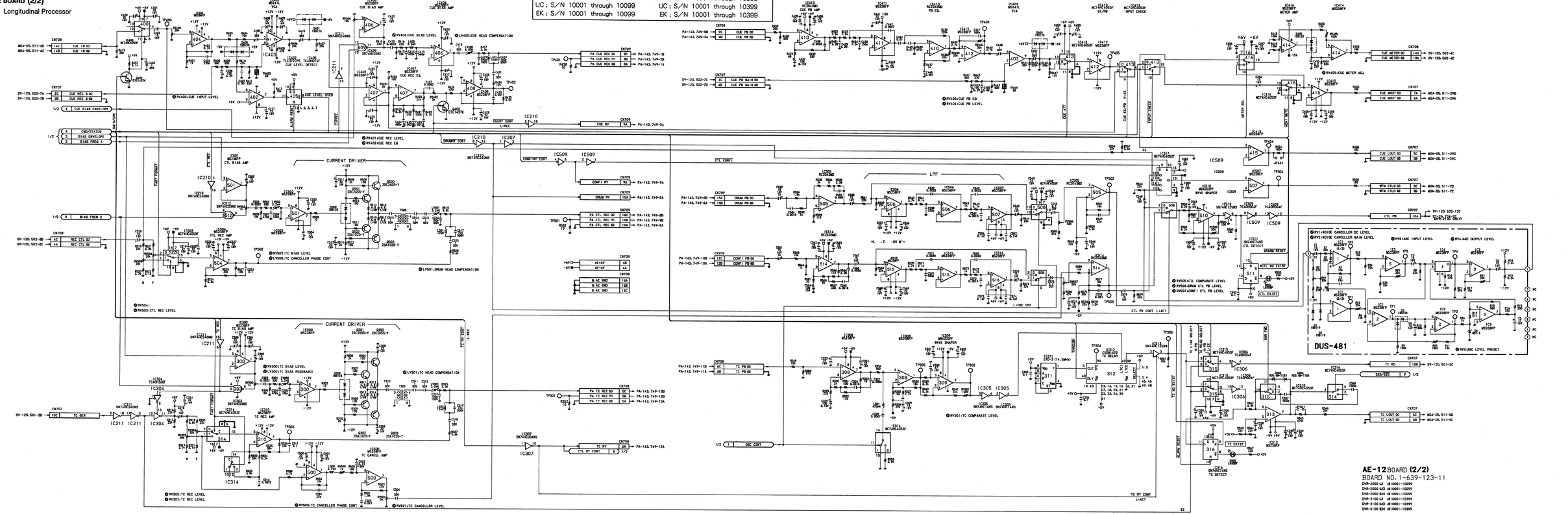

AE-12 BOARD (2/2)
BOARD NO. 1-639-123-11
DVR-2000 UJ : #10001-10099
DVR-2000 EKJ : #10001-10099
DVR-2000 EK3 : #10001-10099
DVR-2100 UJ : #10001-10399
DVR-2100 EKJ : #10001-10399
DVR-2100 EK3 : #10001-10399

19-93 (a)

MOA-05 (1/5) BOARD CARD RACK
CARD RACK MOA-05 (1/5) BOARD

MOA-05 BOARD (1/5)
Audio/Monitor Amp

DVR-2000	DVR-2100
J ; S/N 10201 and higher	J ; S/N 10801 and higher
UC ; S/N 10301 and higher	UC ; S/N 11101 and higher
EK ; S/N 10601 and higher	EK ; S/N 11101 and higher

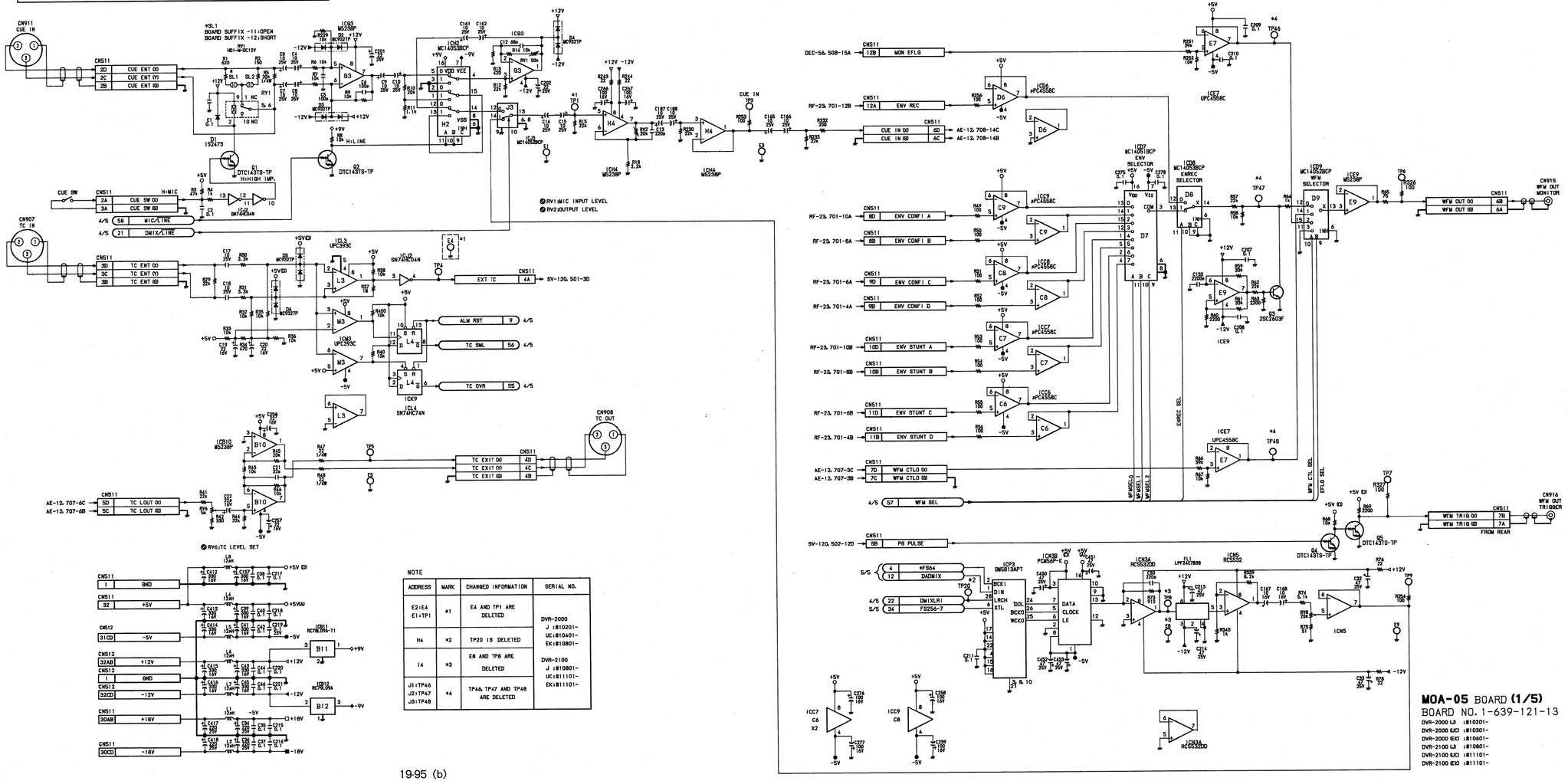

NOTE

ADDRESS	MARK	CHANGED INFORMATION	SERIAL NO.
E2:E4 E1:TP1	#1	E4 AND TP1 ARE DELETED	DVR-2000 J :#10201- UC:#10401- EK:#10601- DVR-2100 J :#10801- UC:#11101- EK:#11101-
H4	#2	TP20 IS DELETED	
I4	#3	E8 AND TP8 ARE DELETED	
J1:TP46 J2:TP47 J3:TP48	#4	TP46, TP47 AND TP48 ARE DELETED	

MOA-05 BOARD (1/5)
BOARD NO. 1-639-121-13
DVR-2000 (J) :#10201-
DVR-2000 (UC) :#10301-
DVR-2000 (EK) :#10601-
DVR-2100 (J) :#10801-
DVR-2100 (UC) :#11101-
DVR-2100 (EK) :#11101-

19-95 (b)

CARD RACK **MOA-05 (1/5) BOARD**

MOA-05 BOARD (1/5)

Audio/Monitor Amp

DVR-2000	DVR-2100
J ; S/N 10001 through 10199	J ; S/N 10001 through 10799
UC ; S/N 10001 through 10299	UC ; S/N 10001 through 11099
EK ; S/N 10001 through 10599	EK ; S/N 10001 through 11099

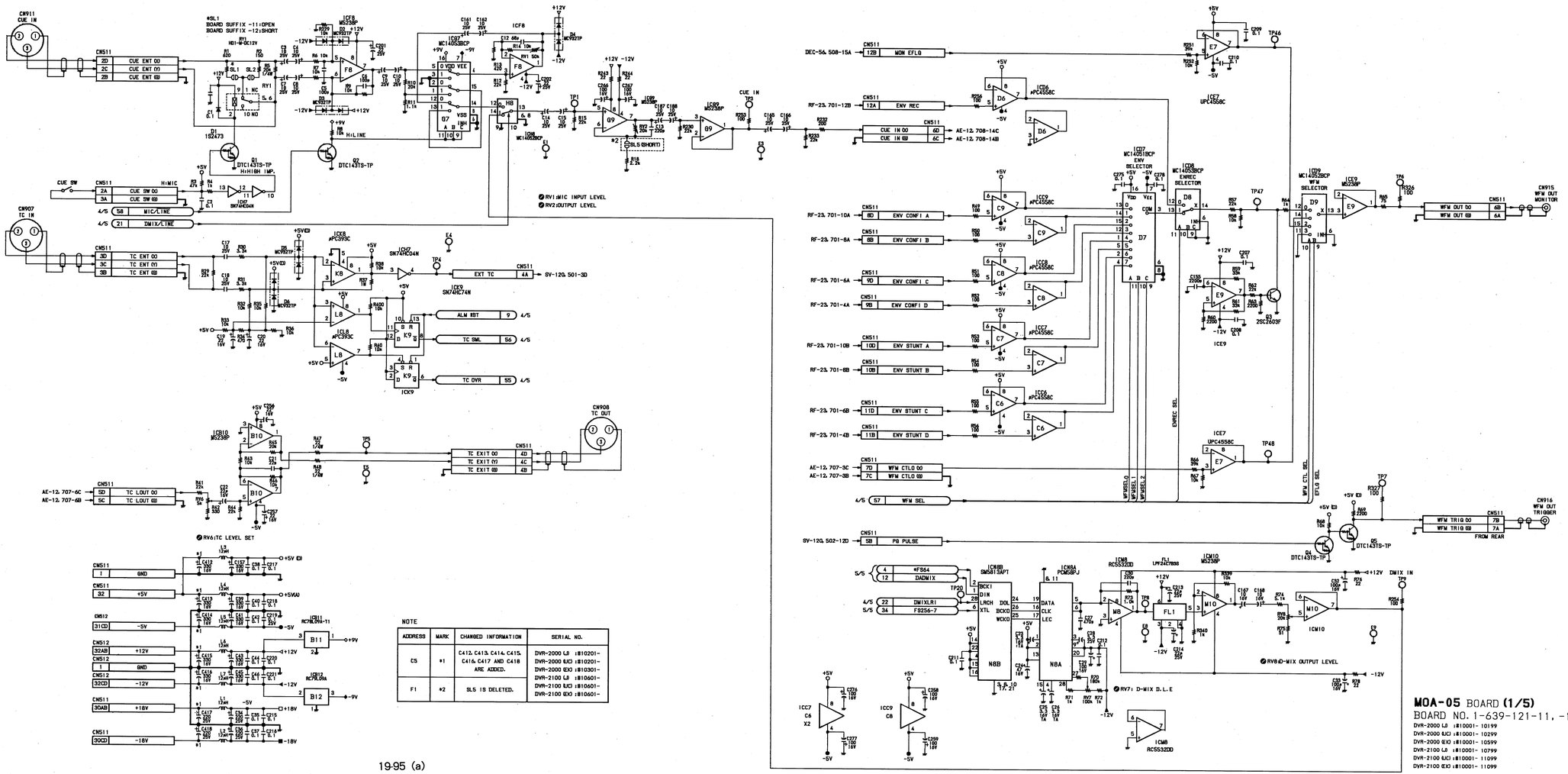

NOTE

ADDRESS	MARK	CHANGED INFORMATION	SERIAL NO.
C5	*1	C412, C413, C414, C415, C416, C417 AND C418 ARE ADDED.	DVR-2000 LJ :B10201- DVR-2000 UJC1 :B10201- DVR-2000 EK1 :B10301- DVR-2100 LJ :B10601- DVR-2100 UJC1 :B10601- DVR-2100 EK1 :B10601-
F1	*2	SL5 IS DELETED.	

MOA-05 BOARD **(1/5)**

BOARD NO. 1-639-121-11, -12

DVR-2000 LJ :B10001- 10199
DVR-2000 UJC1 :B10001- 10299
DVR-2000 EK1 :B10001- 10599
DVR-2100 LJ :B10001- 10799
DVR-2100 UJC1 :B10001- 11099
DVR-2100 EK1 :B10001- 11099

19-95 (a)

MOA-05 (2/5) BOARD CARD RACK
CARD RACK MOA-05 (2/5) BOARD

MOA-05 BOARD (2/5)
Audio/Monitor Amp

DVR-2000	DVR-2100
J ; S/N 10201 and higher	J ; S/N 10601 and higher
UC ; S/N 10201 and higher	UC ; S/N 10601 and higher
EK ; S/N 10301 and higher	EK ; S/N 10601 and higher

NOTE

ADDRESS	MARK	CHANGED INFORMATION	SERIAL NO.
D1	*1	C410, C411 AND FL8 ARE ADDED.	DVR-2000 J :#10201- UC:#10201- EK:#10301- DVR-2100 J :#10601- UC:#10601- EK:#10601-
D4	*2	REFERENCE NO. IS CHANGED. ICD2 → ICD4	DVR-2000 J :#10201- UC:#10301- EK:#10601- DVR-2100 J :#10801- UC:#11101- EK:#11101-
E4	*3	REFERENCE NO. IS CHANGED. ICE3 → ICD2	
B4	*4	REFERENCE NO. IS CHANGED. ICB2 → ICE3	
B3	*5	REFERENCE NO. IS CHANGED. ICB14 → ICH13	
H3	*6	REFERENCE NO. IS CHANGED. ICH13 → ICH12	
H4	*7	REFERENCE NO. IS CHANGED. ICB13 → ICB12	
J5	*8	C369 AND C372 ARE DELETED	DVR-2000 J :#10201- UC:#10401- EK:#10701- DVR-2100 J :#10801- UC:#11101- EK:#11101-
B4	*9	E8 AND TP11 ARE DELETED	DVR-2000 J :#10201- UC:#10401- EK:#10801- DVR-2100 J :#10801- UC:#11101- EK:#11101-
J3:TP21 J3:TP22 J4:TP23	*10	TP21, TP22 AND TP23 ARE DELETED	
F4	*11	TP50 IS DELETED	

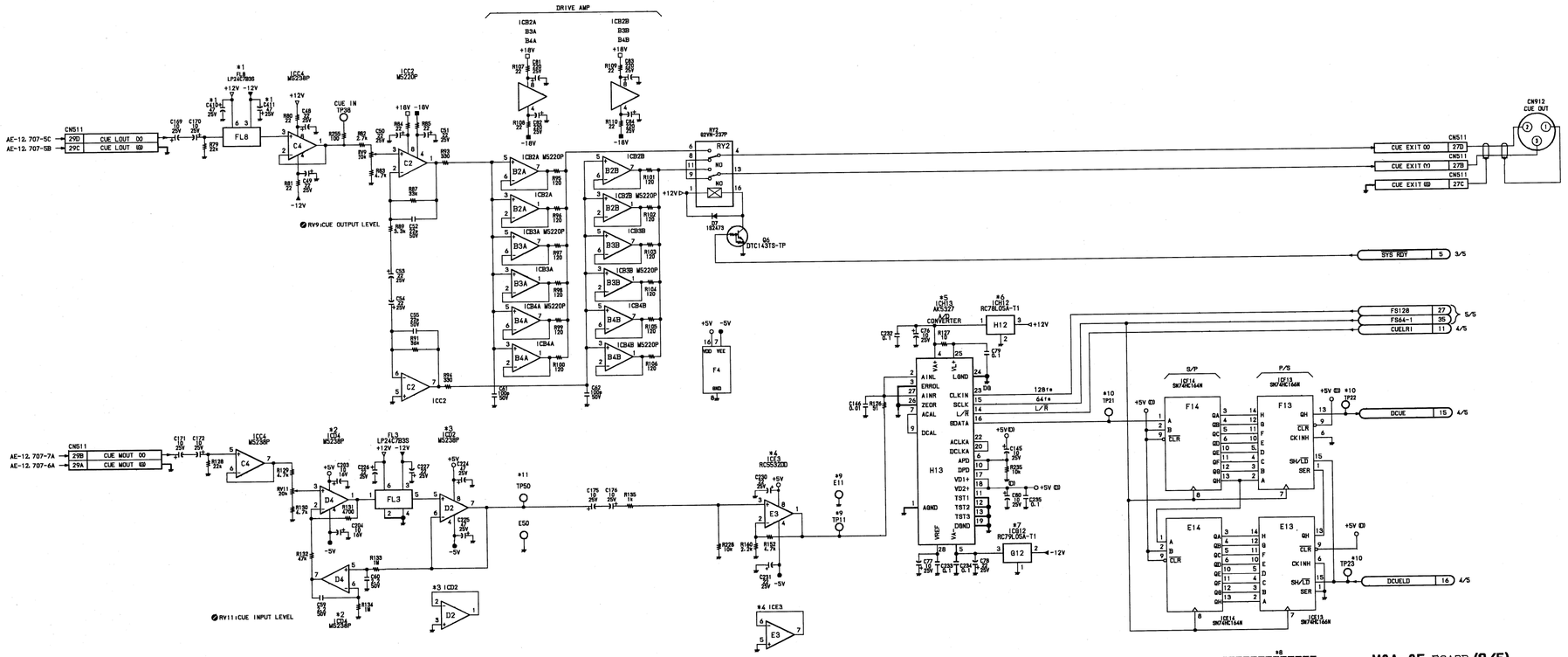

MOA-05 BOARD **(2/5)**
BOARD NO. 1-639-121-12, -13
DVR-2000 (J) :#10201-
DVR-2000 (UC) :#10201-
DVR-2000 (EK) :#10301-
DVR-2100 (J) :#10601-
DVR-2100 (UC) :#10601-
DVR-2100 (EK) :#10601-

19-97 (b)

CARD RACK **MOA-05 (2/5) BOARD**

MOA-05 BOARD (2/5)
Audio/Monitor Amp

DVR-2000	DVR-2100
J ; S/N 10001 through 10199	J ; S/N 10001 through 10599
UC ; S/N 10001 through 10199	UC ; S/N 10001 through 10599
EK ; S/N 10001 through 10299	EK ; S/N 10001 through 10599

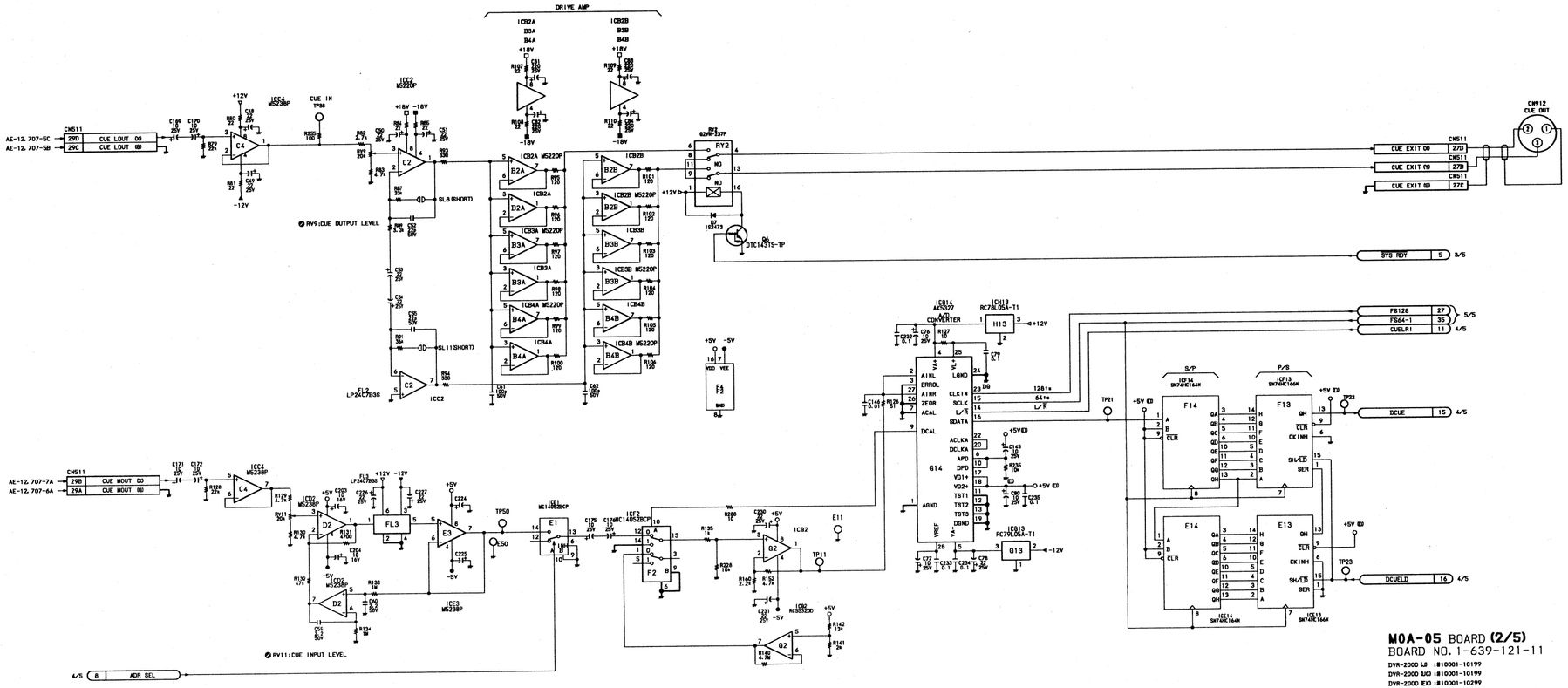

19-97 (a)

MOA-05 (3/5) BOARD CARD RACK
CARD RACK MOA-05 (3/5) BOARD

MOA-05 BOARD (3/5)
Audio/Monitor Amp

DVR-2000	DVR-2100
J ; S/N 10201 and higher	J ; S/N 10801 and higher
UC ; S/N 10301 and higher	UC ; S/N 11101 and higher
EK ; S/N 10601 and higher	EK ; S/N 11101 and higher

NOTE

ADDRESS	MARK	CHANGED INFORMATION	SERIAL No.
H4	*1	C486 IS ADDED	DVR-2000 J :#10201- UC:#10401- EK:#10701- DVR-2100 J :#10801- UC:#11101- EK:#11101-
D1:TP35 D2:TP36	*2	TP35 AND TP36 ARE DELETED	DVR-2000 J :#10201- UC:#10401- EK:#10601- DVR-2100 J :#10801- UC:#11101- EK:#11101-
F1	*3	E12, TP12 AND TP14 ARE DELETED	
F3:TP16 F4:TP18	*4	TP16 AND TP18 ARE DELETED	
J2	*5	E15 IS DELETED	
J2	*6	ES1, ES2, TPS1 AND TPS2 ARE DELETED	
J3	*7	ES3, ES4, TPS3 AND TPS4 ARE DELETED	
Q1:R341 Q2:R343	*8	R341, R343 CHANGED 8.2k → 10k	DVR-2000 J :#10201- UC:#10501- EK:#10901- DVR-2100 J :#10801- UC:#11101- EK:#11101-

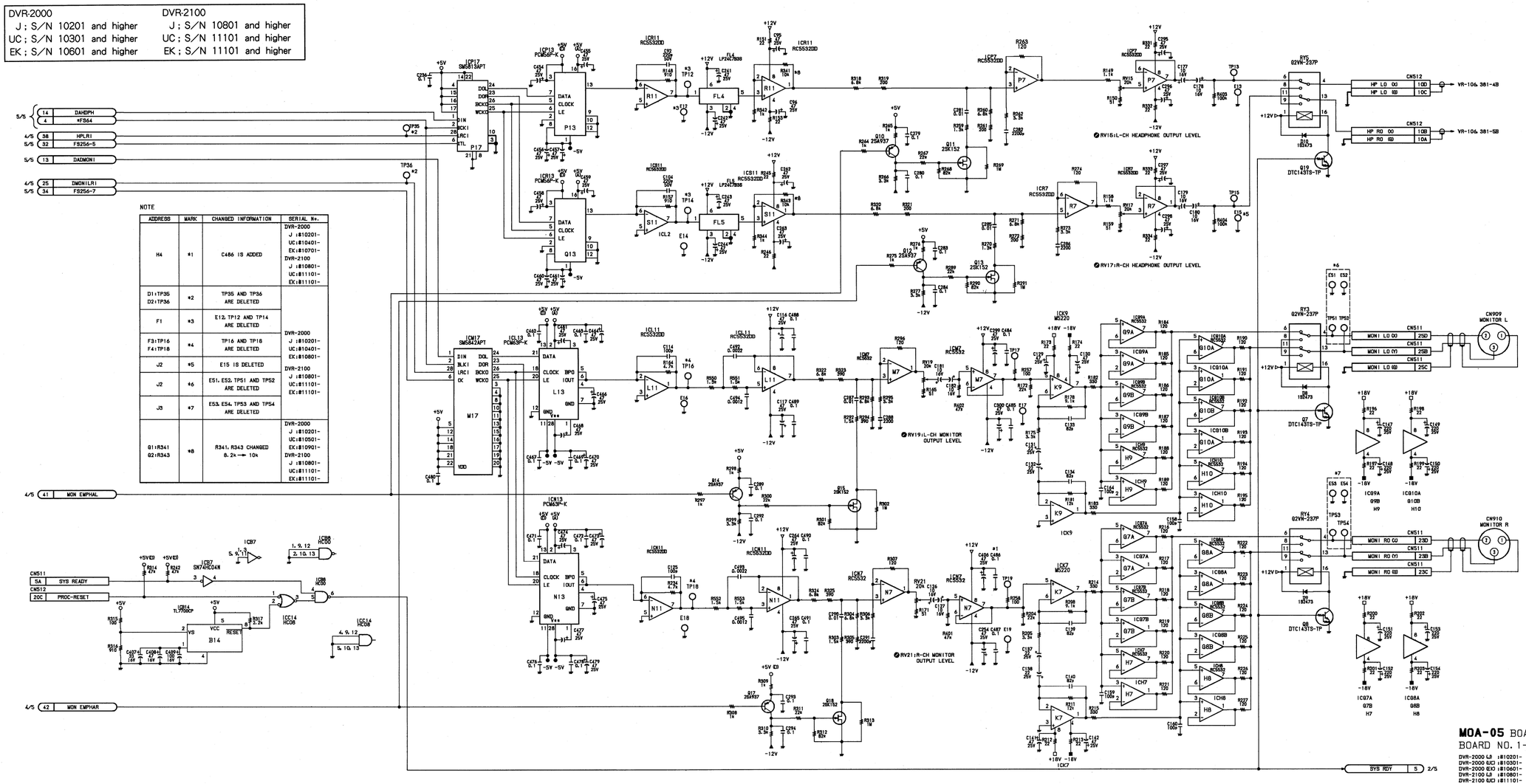

MOA-05 BOARD (3/5)
BOARD NO. 1-639-121-13

DVR-2000 LJ :#10201-
DVR-2000 EJ :#10301-
DVR-2000 EJ :#10601-
DVR-2100 LJ :#10801-
DVR-2100 EJ :#11101-
DVR-2100 EJ :#11101-

19-99 (b)

MOA-05 (3/5) BOARD CARD RACK
CARD RACK **MOA-05 (3/5) BOARD**

MOA-05 BOARD (3/5)

Audio/Monitor Amp

DVR-2000	DVR-2100
J ; S/N 10001 through 10199	J ; S/N 10001 through 10799
UC ; S/N 10001 through 10299	UC ; S/N 10001 through 11099
EK ; S/N 10001 through 10599	EK ; S/N 10001 through 11099

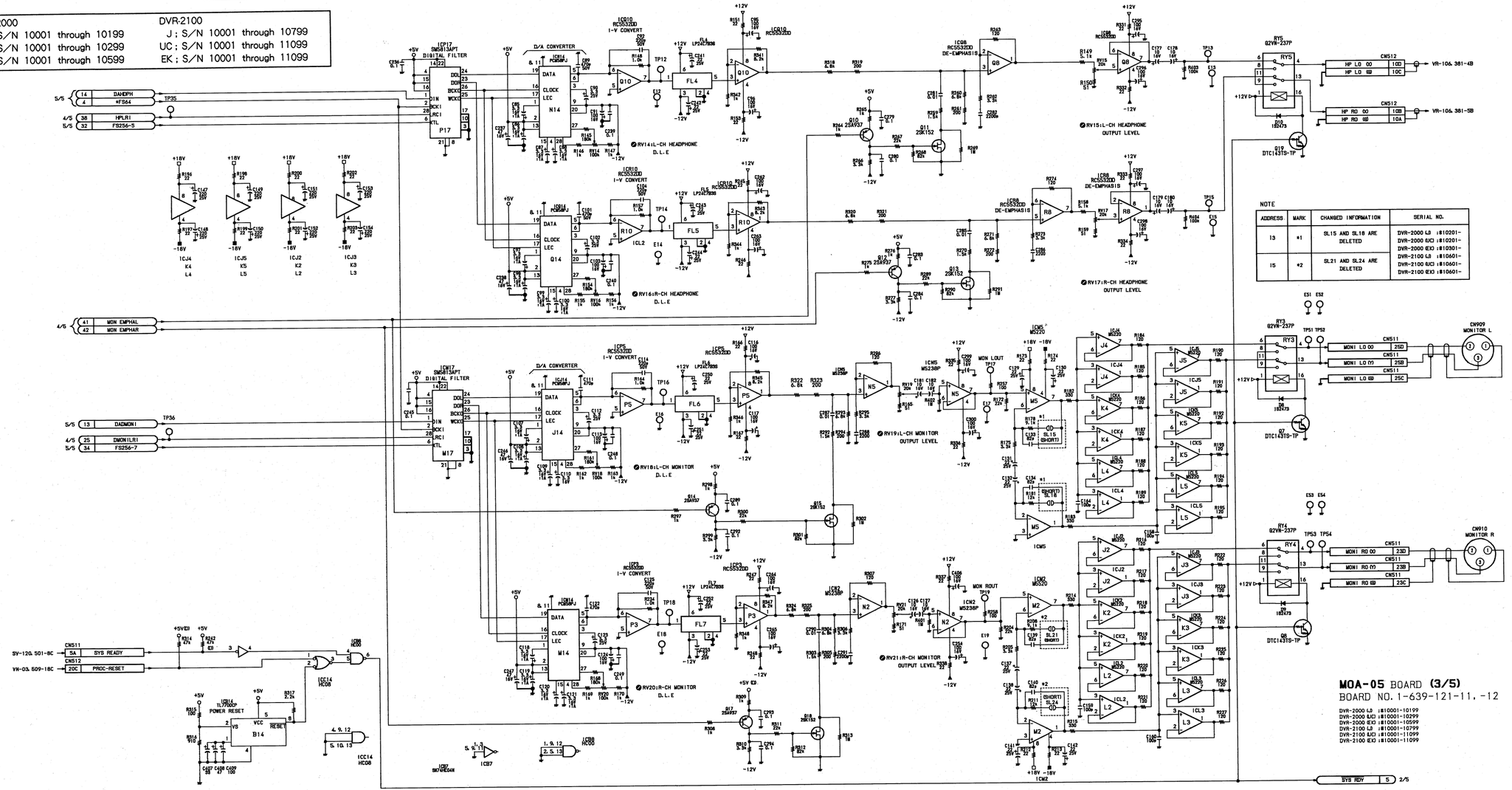

NOTE			
ADDRESS	MARK	CHANGED INFORMATION	SERIAL NO.
I3	*1	SL15 AND SL18 ARE DELETED	DVR-2000 LJ :#10201- DVR-2000 UC :#10201- DVR-2000 EK :#10301- DVR-2100 LJ :#10501- DVR-2100 UC :#10601- DVR-2100 EK :#10601-
I5	*2	SL21 AND SL24 ARE DELETED	

MOA-05 BOARD **(3/5)**

BOARD NO. 1-639-121-11, -12

DVR-2000 LJ :#10001-10199
DVR-2000 UC :#10001-10299
DVR-2000 EK :#10001-10599
DVR-2100 LJ :#10001-10799
DVR-2100 UC :#10001-11099
DVR-2100 EK :#10001-11099

19-99 (a)

CARD RACK MOA-05 (4/5) BOARD MOA-05 (4/5) BOARD CARD RACK

MOA-05 BOARD (4/5)

Audio/Monitor Amp

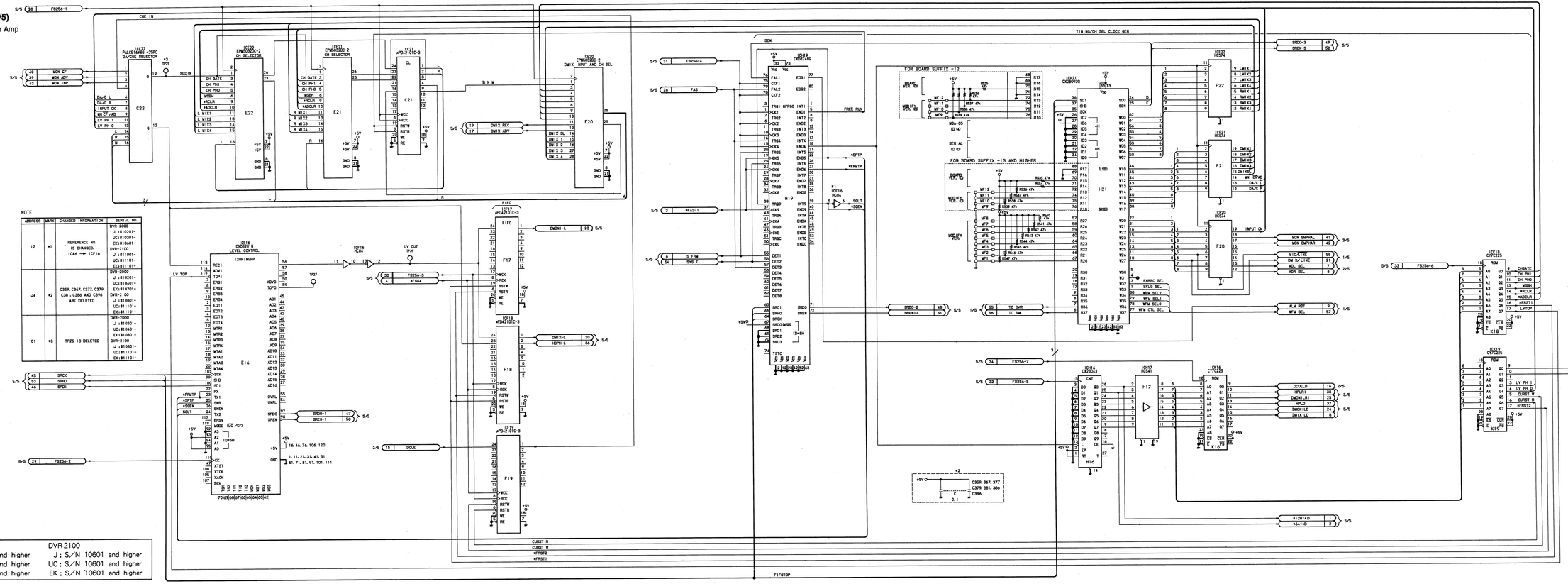

NOTE			
ADDRESS	MARK	CHANGED INFORMATION	SERIAL NO.
I2	*1	REFERENCE NO. IS CHANGED. IC46 → IC F16	DVR-2000 J :810201- UC:810301- EK:810601- DVR-2100 J :811001- UC:811101- EK:811101-
J4	*2	C359, C367, C377, C379 C381, C386 AND C396 ARE DELETED	DVR-2000 J :810201- UC:810401- EK:810701- DVR-2100 J :810801- UC:811101- EK:811101-
C1	*3	TP25 IS DELETED	DVR-2000 J :810201- UC:810401- EK:810601- DVR-2100 J :810601- UC:811101- EK:811101-

DVR-2000	DVR-2100
J ; S/N 10201 and higher	J ; S/N 10601 and higher
UC ; S/N 10201 and higher	UC ; S/N 10601 and higher
EK ; S/N 10301 and higher	EK ; S/N 10601 and higher

MOA-05 BOARD **(4/5)**

BOARD NO. 1-639-121-12, -13

DVR-2000 J/J :810201-
DVR-2000 UC/J :810201-
DVR-2000 EK/J :810301-
DVR-2100 J/J :810601-
DVR-2100 UC/J :810601-
DVR-2100 EK/J :810601-

19-101 (b)

CARD RACK MOA-05 (4/5) BOARD MOA-05 (4/5) BOARD CARD RACK

MOA-05 BOARD (4/5)

Audio/Monitor Amp

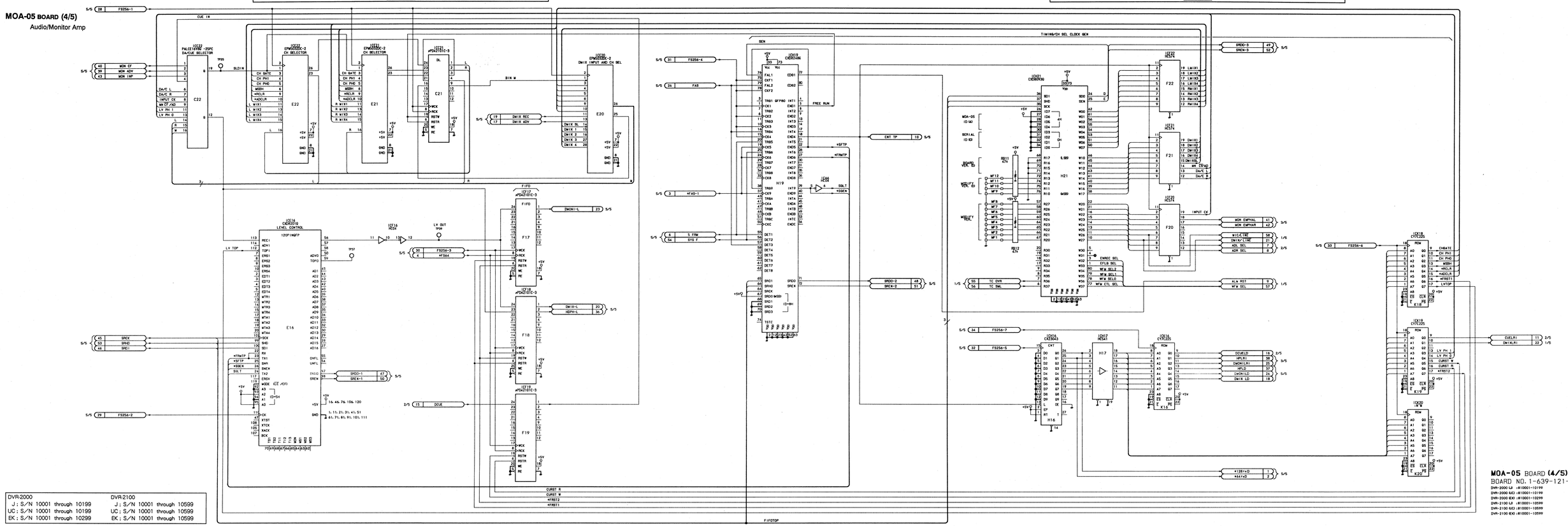

DVR-2000	DVR-2100
J : S/N 10001 through 10199	J : S/N 10001 through 10599
UC : S/N 10001 through 10199	UC : S/N 10001 through 10599
EK : S/N 10001 through 10299	EK : S/N 10001 through 10599

MOA-05 BOARD (4/5)

BOARD NO. 1-639-121-11

DVR-2000 UJ :#10001-10199
DVR-2000 UC1 :#10001-10199
DVR-2000 EK1 :#10001-10299
DVR-2100 UJ :#10001-10599
DVR-2100 UC1 :#10001-10599
DVR-2100 EK1 :#10001-10599

19-101 (a)

MOA-05 BOARD (5/5)

Audio/Monitor Amp

DVR-2000	DVR-2100
J ; S/N 10201 and higher	J ; S/N 10601 and higher
UC ; S/N 10201 and higher	UC ; S/N 10601 and higher
EK ; S/N 10301 and higher	EK ; S/N 10601 and higher

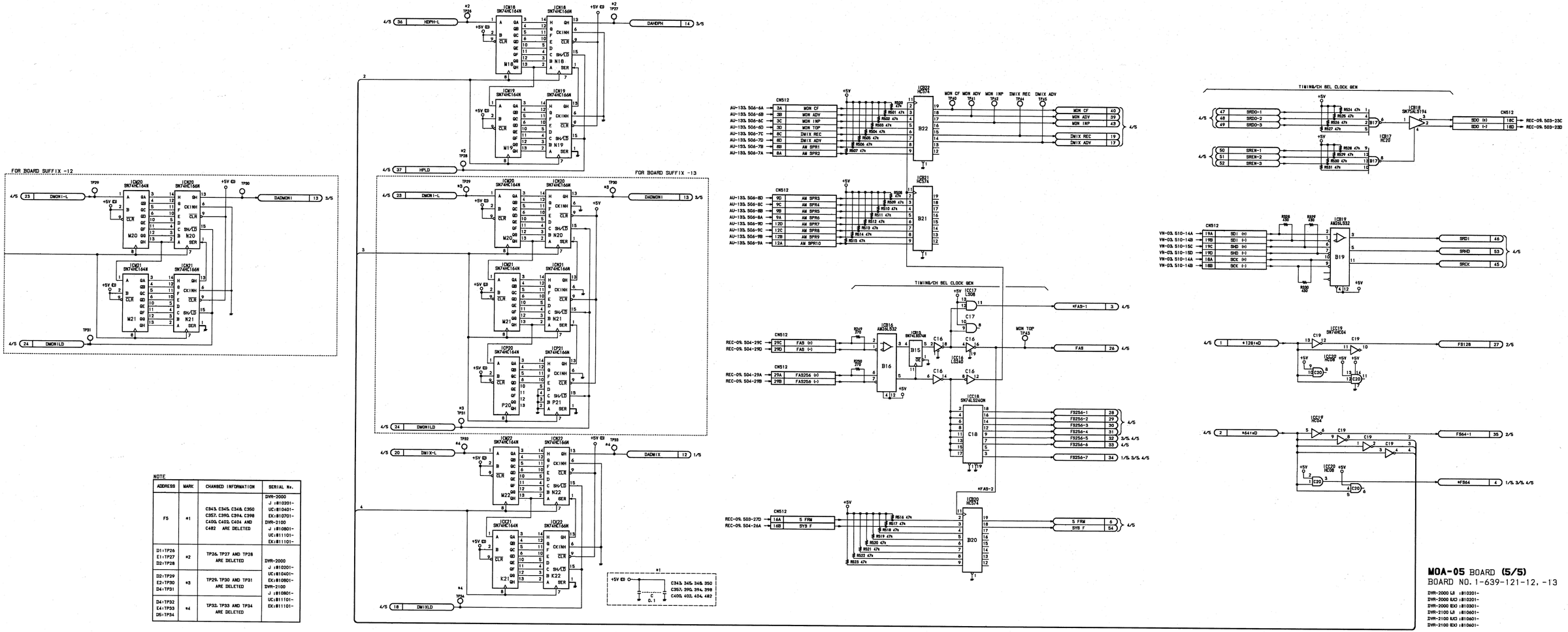

NOTE			
ADDRESS	MARK	CHANGED INFORMATION	SERIAL No.
F5	*1	C343, C345, C348, C350 C357, C390, C394, C398 C405, C402, C404 AND C482 ARE DELETED	DVR-2000 J :810201- UC:810401- EK:810701- DVR-2100 J :810801- UC:811101- EK:811101-
D1↔TP26 E1↔TP27 D2↔TP28	*2	TP26, TP27 AND TP28 ARE DELETED	DVR-2000 J :810201- UC:810401- EK:810601- DVR-2100 J :810801- UC:811101- EK:811101-
D2↔TP29 E2↔TP30 D4↔TP31	*3	TP29, TP30 AND TP31 ARE DELETED	
D4↔TP32 E4↔TP33 D5↔TP34	*4	TP32, TP33 AND TP34 ARE DELETED	

MOA-05 BOARD **(5/5)**
BOARD NO. 1-639-121-12, -13

DVR-2000 LB :810201-
DVR-2000 UC :810201-
DVR-2000 EK :810301-
DVR-2100 LB :810601-
DVR-2100 UC :810601-
DVR-2100 EK :810601-

19-103 (b)

MOA-05 (5/5) BOARD CARD RACK
CARD RACK **MOA-05 (5/5) BOARD**

MOA-05 BOARD (5/5)
Audio/Monitor Amp

DVR-2000	DVR-2100
J : S/N 10001 through 10199	J : S/N 10001 through 10599
UC : S/N 10001 through 10199	UC : S/N 10001 through 10599
EK : S/N 10001 through 10299	EK : S/N 10001 through 10599

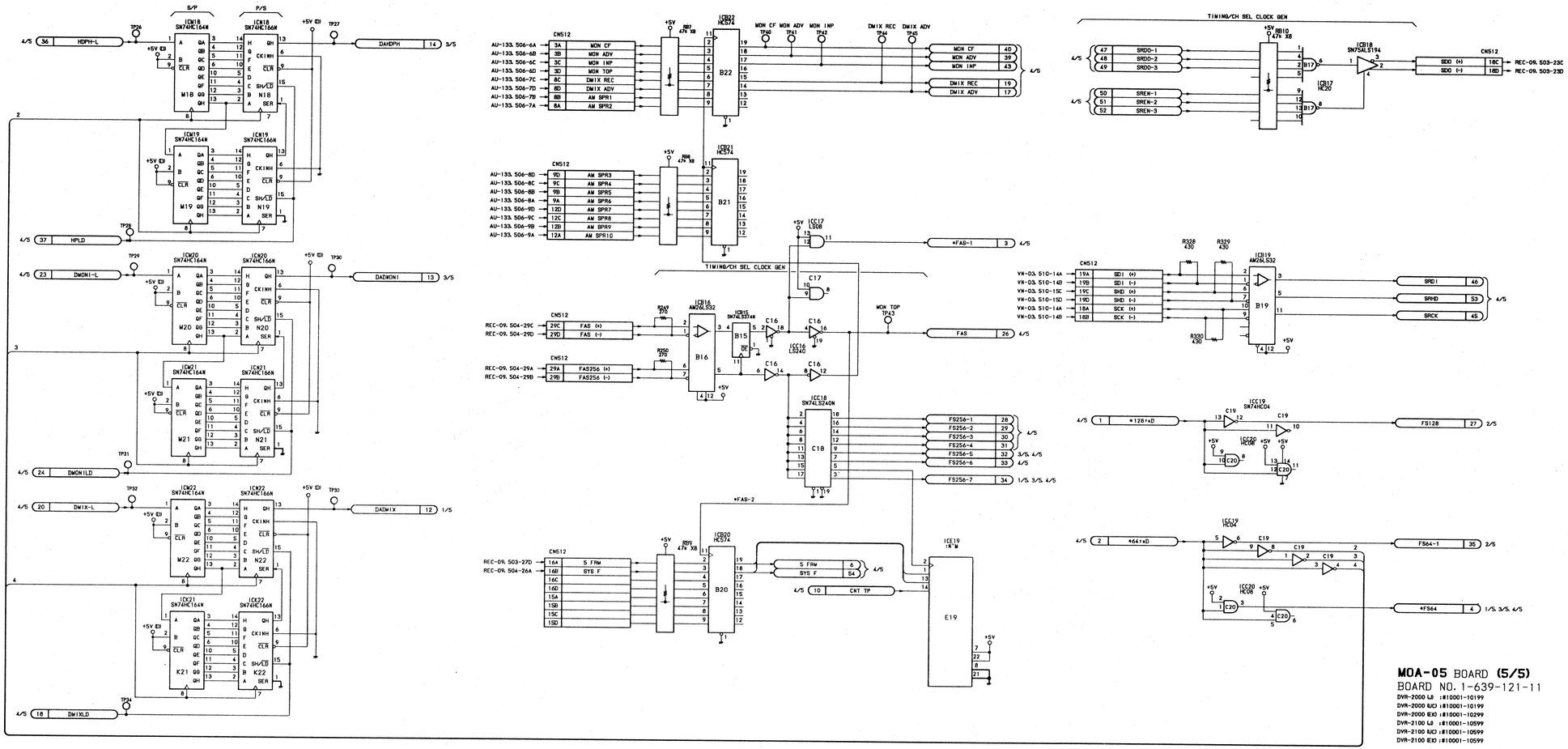

MOA-05 BOARD **(5/5)**
BOARD NO. 1-639-121-11
DVR-2000 (J) :#10001-10199
DVR-2000 (UC) :#10001-10199
DVR-2000 (EK) :#10001-10299
DVR-2100 (J) :#10001-10599
DVR-2100 (UC) :#10001-10599
DVR-2100 (EK) :#10001-10599

19-103 (a)

MOA-05 (5/5) BOARD CARD RACK

CARD RACK **MOA-05 (5/5) BOARD**

MOA-05 BOARD (5/5)
Audio/Monitor Amp

DVR-2000	DVR-2100
J ; S/N 10001 through 10199	J ; S/N 10001 through 10599
UC ; S/N 10001 through 10199	UC ; S/N 10001 through 10599
EK ; S/N 10001 through 10299	EK ; S/N 10001 through 10599

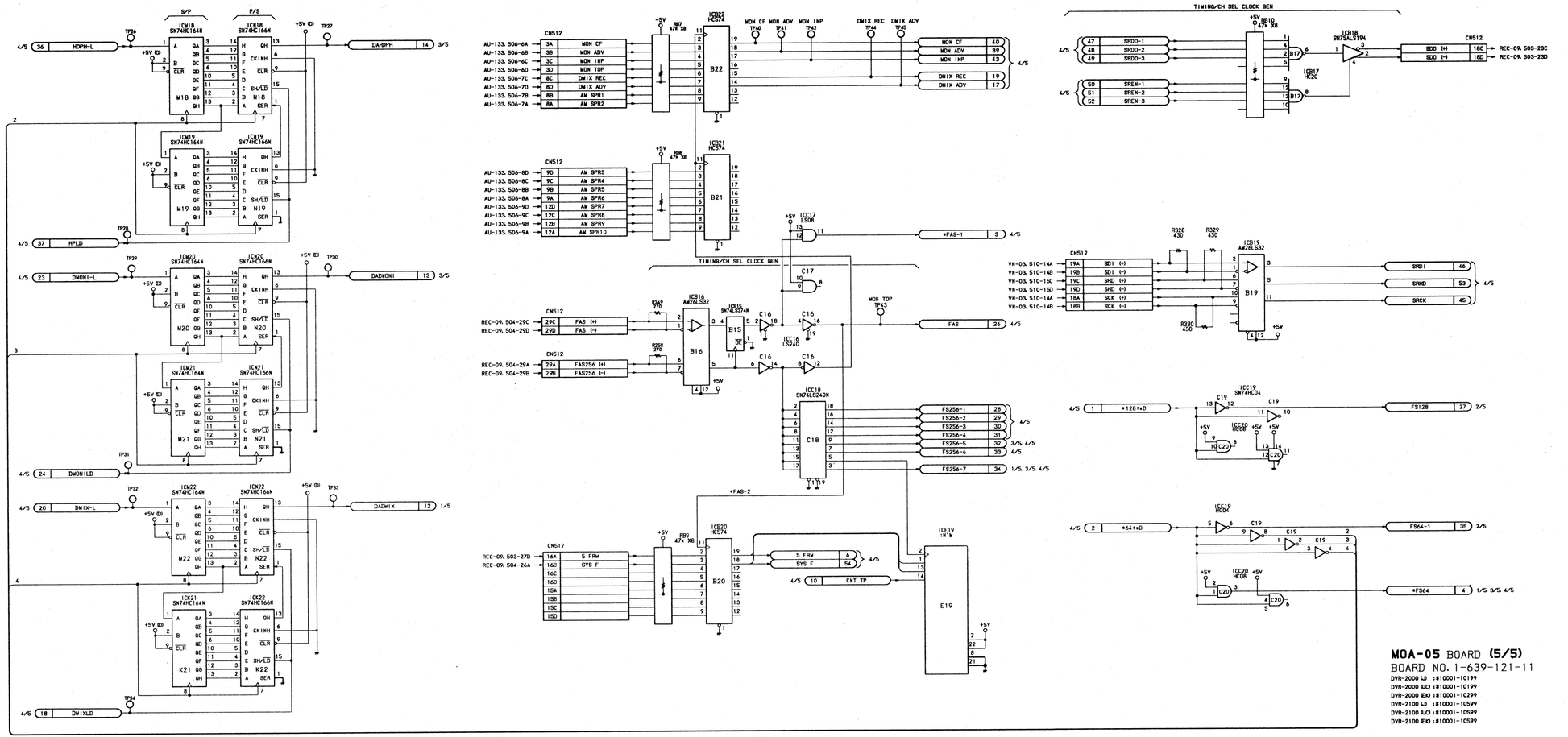

MOA-05 BOARD **(5/5)**
BOARD NO. 1-639-121-11
DVR-2000 UJ :#10001-10199
DVR-2000 UC) :#10001-10199
DVR-2000 (EK) :#10001-10299
DVR-2100 UJ :#10001-10599
DVR-2100 UC) :#10001-10599
DVR-2100 (EK) :#10001-10599

19-103 (a)

PA-142 BOARD

CUE/TC/CTL Head Amp

MARK	CHANGED INFORMATION	SERIAL NO.
*1	C1, C7, C9: 15 16V → 22 4V	DVR-2000 (J) :#10001- DVR-2000 (UC) :#10001- DVR-2000 (EK) :#10001- DVR-2100 (J) :#10201- DVR-2100 (UC) :#10201- DVR-2100 (EK) :#10201-
*2	C18 (100u 6.3V) IS REPLACED TO C4 (22 4V)	
*3	C16, D4, Q4 AND RY4 ARE DELETED	

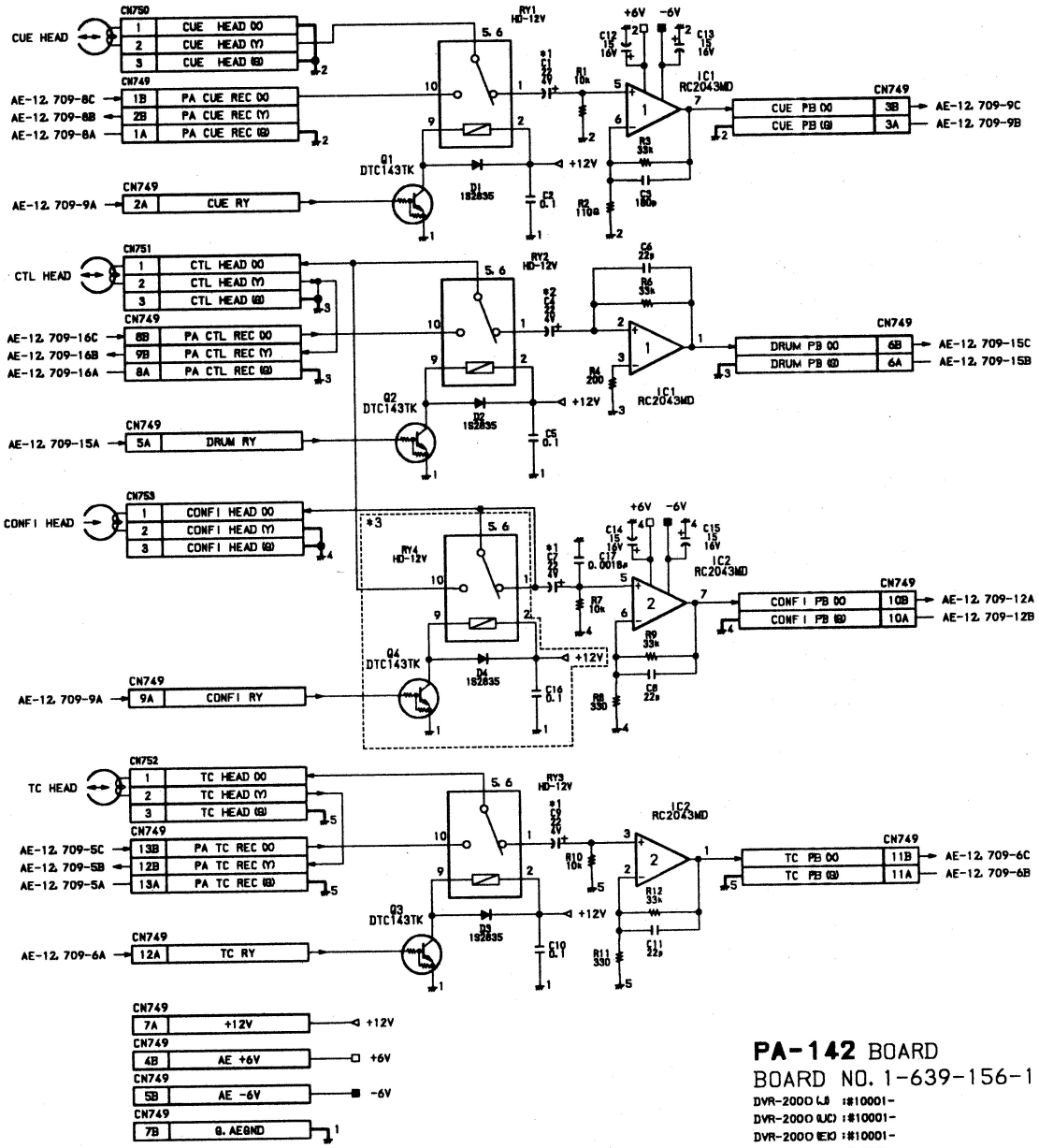

PA-142 BOARD

BOARD NO. 1-639-156-11, -12

DVR-2000 (J) :#10001-
DVR-2000 (UC) :#10001-
DVR-2000 (EK) :#10001-
DVR-2100 (J) :#10001-
DVR-2100 (UC) :#10001-
DVR-2100 (EK) :#10001-

CARD RACK SV-120 (1/6) BOARD SV-120 (1/6) BOARD CARD RACK

SV-120 BOARD (1/6)

Servo/System Control

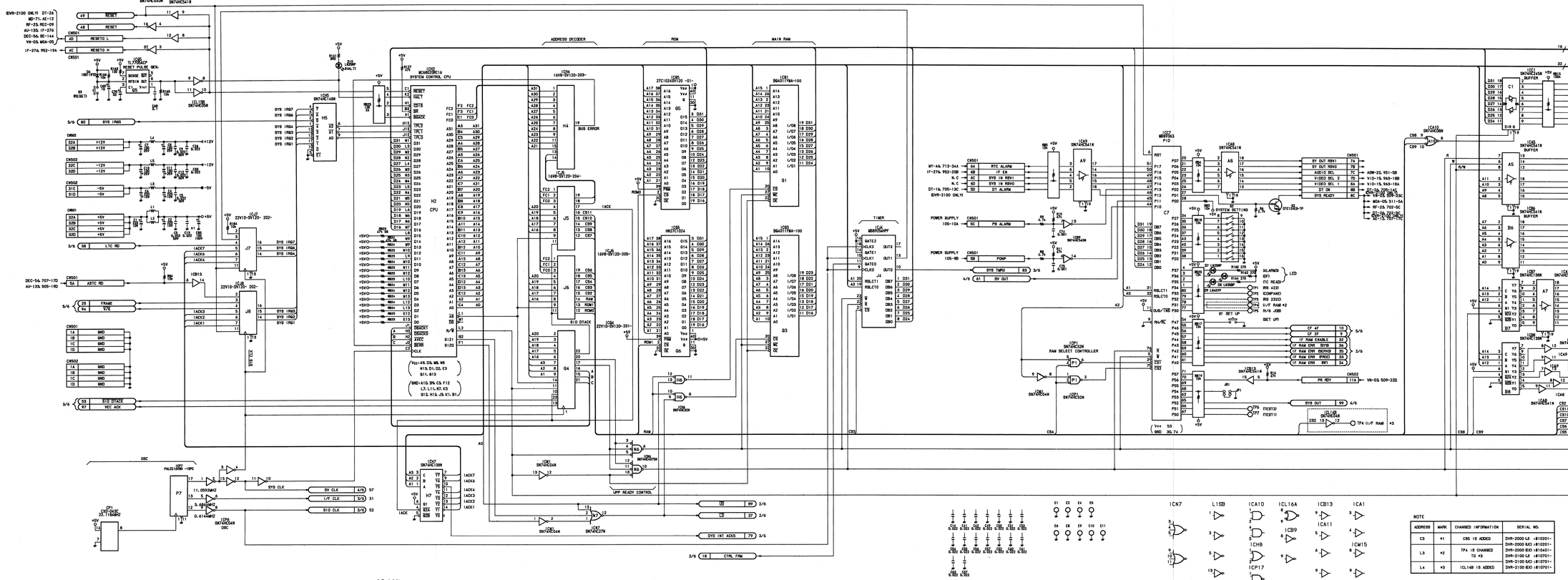

NOTE			
ADDRESS	MARK	CHANGED INFORMATION	SERIAL NO.
C3	*1	C85 IS ADDED	DVR-2000 LJ :#10001-
			DVR-2000 KJ :#10001-
L3	*2	TP4 IS CHANGED TO *3	DVR-2000 EX0 :#10001-
			DVR-2100 LJ :#10001-
L4	*3	IC14&15 IS ADDED	DVR-2100 KJ :#10001-
			DVR-2100 EX0 :#10001-

SV-120 BOARD **(1/6)**

BOARD NO. 1-639-116-11, -12

19-107

CARD RACK SV-120 (2/6) BOARD SV-120 (2/6) BOARD CARD RACK

SV-120 BOARD (2/6)
Servo/System Control

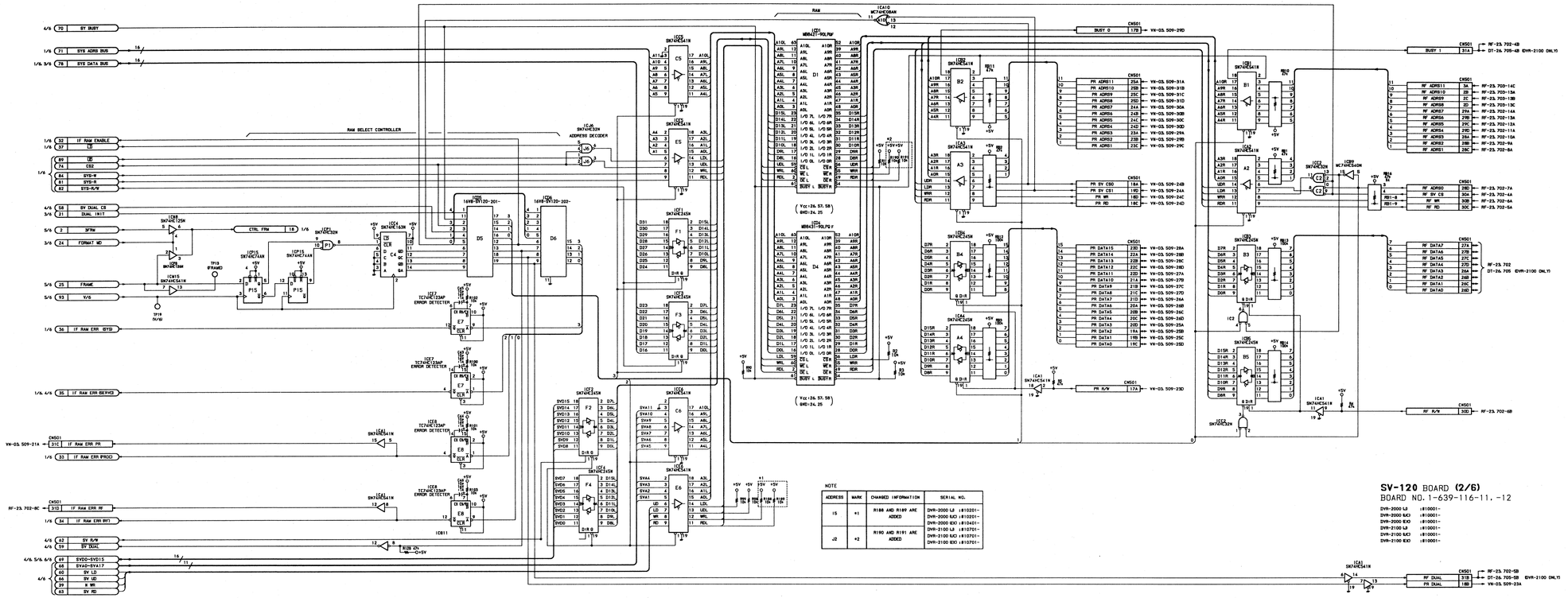

NOTE

ADDRESS	MARK	CHANGED INFORMATION	SERIAL NO.
J5	*1	R188 AND R189 ARE ADDED	DVR-2000 LJ :810201- DVR-2000 MJ :810201- DVR-2000 EJ :810401- DVR-2100 LJ :810701- DVR-2100 MJ :810701- DVR-2100 EJ :810701-
J2	*2	R190 AND R191 ARE ADDED	

19-109

CARD RACK SV-120 (3/6) BOARD SV-120 (3/6) BOARD CARD RACK

SV-120 BOARD (3/6)
Servo/System Control

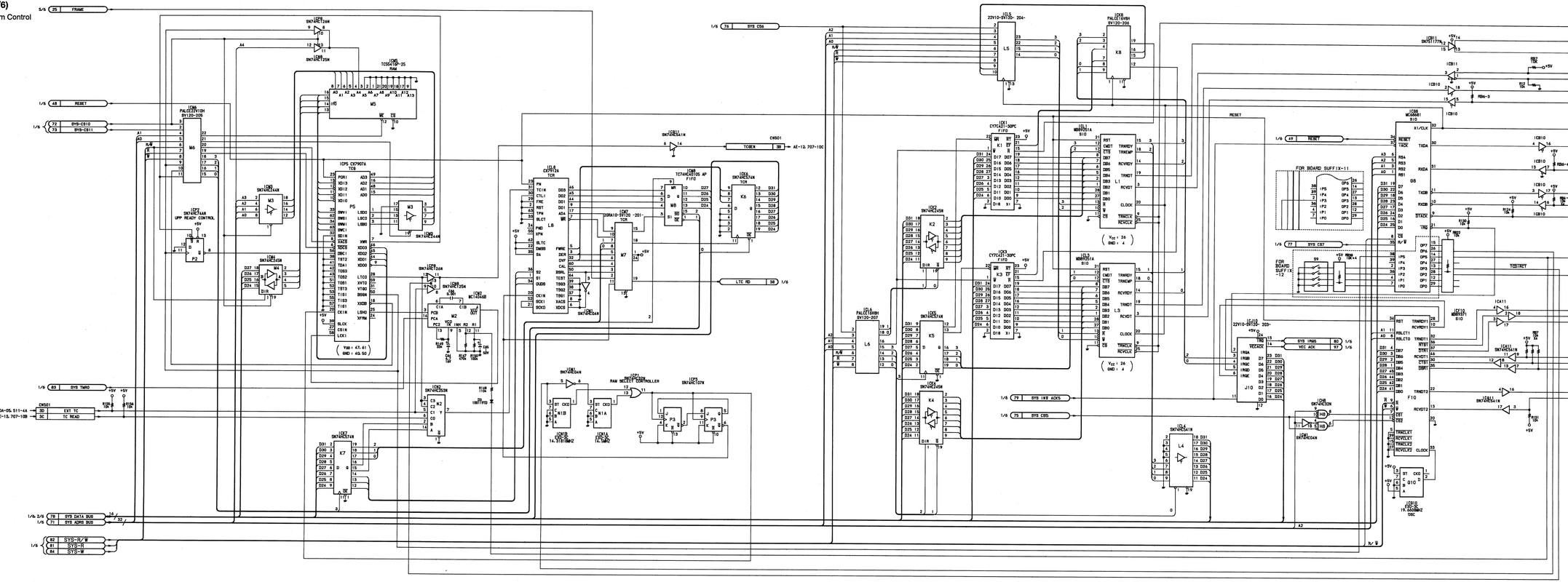

SV-120 BOARD (3/6)
BOARD NO. 1-639-116-11, -12

DVR-2000 LE	#10001-
DVR-2000 EJC	#10001-
DVR-2000 EJO	#10001-
DVR-2100 LE	#10001-
DVR-2100 EJC	#10001-
DVR-2100 EJO	#10001-

19-111

CARD RACK SV-120 (4/6) BOARD SV-120 (4/6) BOARD CARD RACK

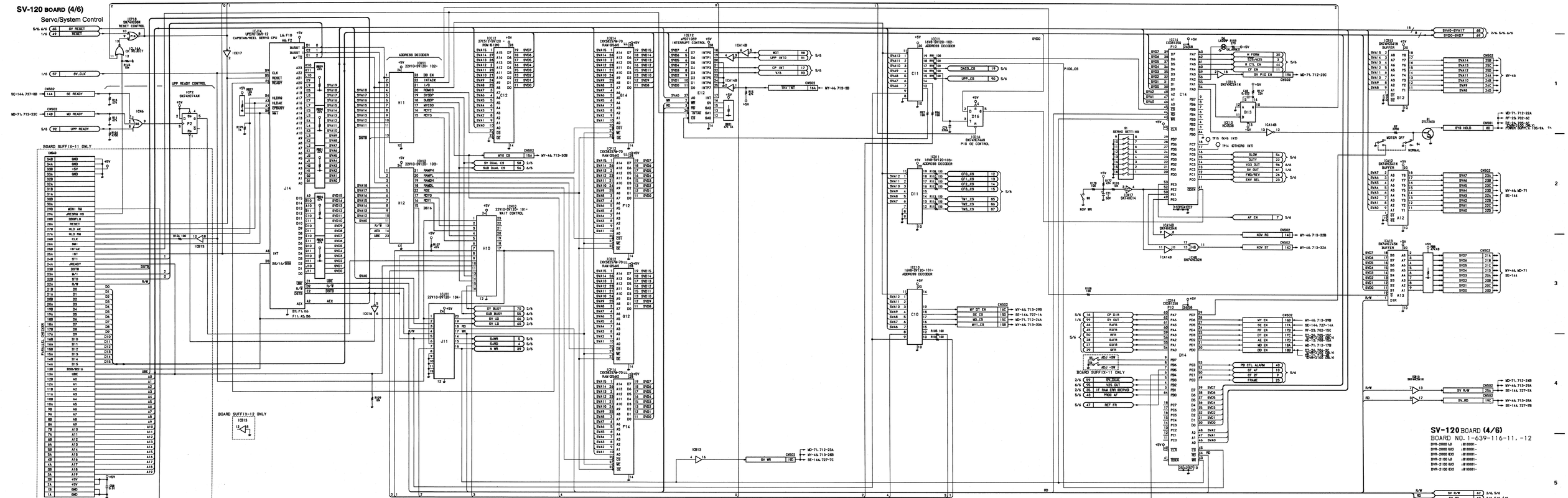

19-113

CARD RACK SV-120 (5/6) BOARD SV-120 (5/6) BOARD CARD RACK

SV-120 BOARD (5/6)

Servo/System Control

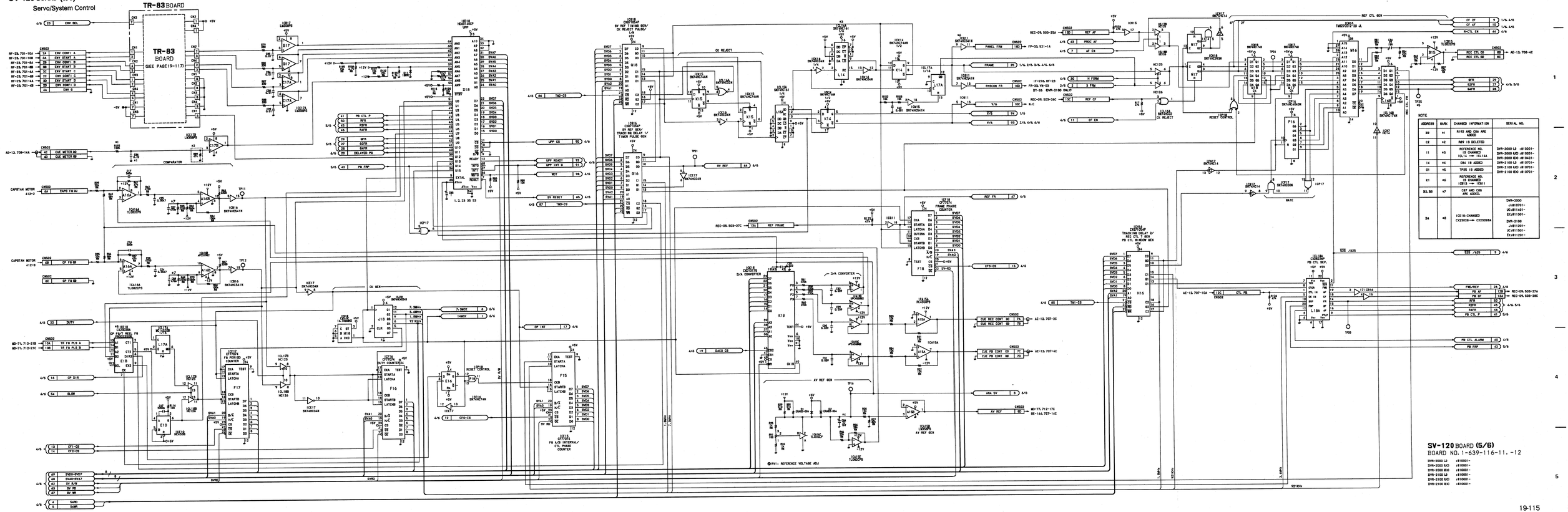

ADDRESS	MARK	CHANGED INFORMATION	SERIAL NO.
B2	#1	R192 AND C84 ARE ADDED	
C2	#2	R89 IS DELETED	
I1	#3	REFERENCE NO. IC116 CHANGED IC114 ⟶ IC114A	DVR-2000 LB : (810001~ DVR-2000 EKD : (810001~ DVR-2000 EKS : (810401~ DVR-2100 LB : (810701~ DVR-2100 EKD : (810701~ DVR-2100 EKS : (810701~
I4	#4	C84 IS ADDED	
O1	#5	TP95 IS ADDED	
E1	#6	REFERENCE NO. IS CHANGED IC813 ⟶ IC811	
B3, B9	#7	C87 AND C88 ARE ADDED.	
B4	#8	IC218:CHANGED CX29038 ⟶ CX29038A	DVR-3000 J:(810701~ UC:(811401~ EX:(811301~ DVR-2100 J:(811201~ UC:(811501~ EX:(811201~

SV-120 BOARD (5/6)

BOARD NO. 1-639-116-11, -12

DVR-2000 LB	(810001~
DVR-2000 EKD	(810001~
DVR-2000 EKS	(810001~
DVR-2100 LB	(810001~
DVR-2100 EKD	(810001~
DVR-2100 EKS	(810001~

19-115

SV-120 BOARD (6/6)

Servo/System Control

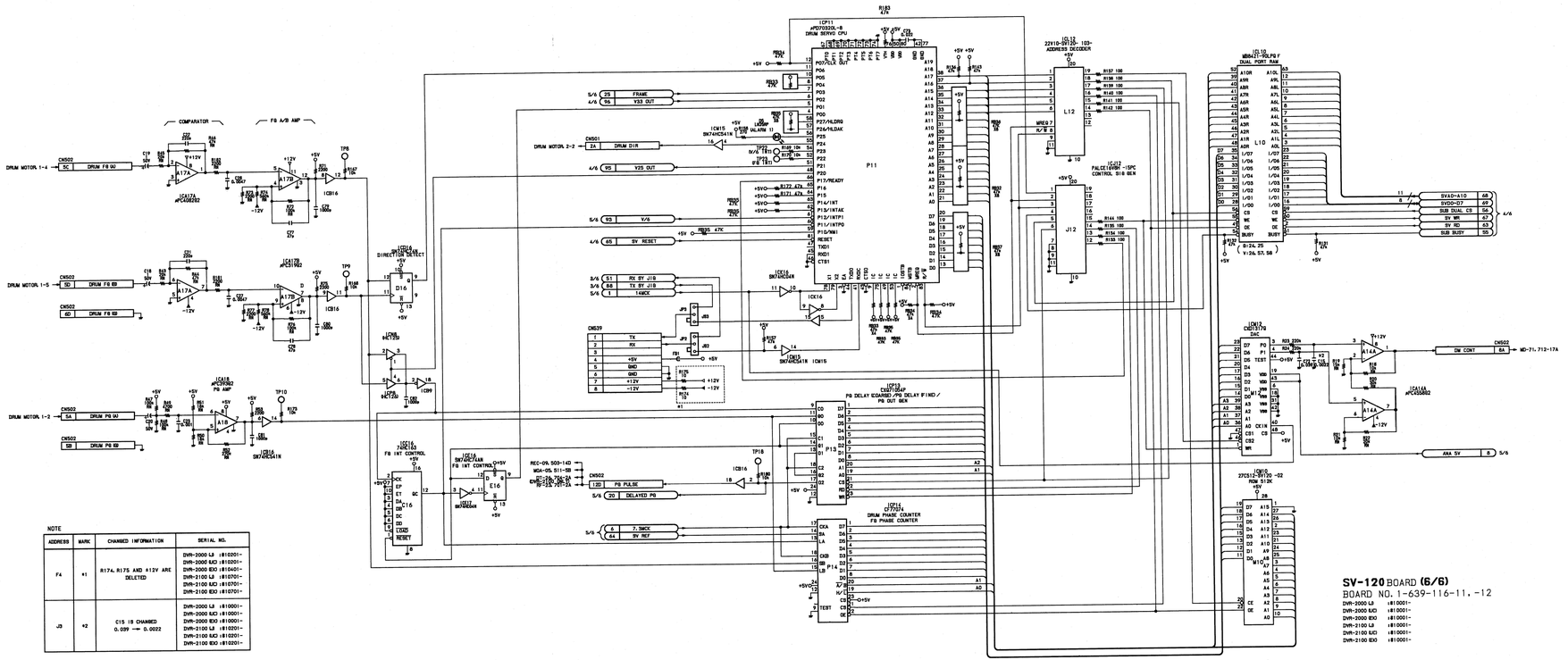

NOTE			
ADDRESS	MARK	CHANGED INFORMATION	SERIAL NO.
F4	#1	R174, R175 AND +12V ARE DELETED	DVR-2000 LJ :810201~ DVR-2000 UJ :810201~ DVR-2000 EJ :810401~ DVR-2100 LJ :810701~ DVR-2100 UJ :810701~ DVR-2100 EJ :810701~
J3	#2	C15 IS CHANGED 0.039 → 0.0022	DVR-2000 LJ :810001~ DVR-2000 UJ :810001~ DVR-2000 EJ :810001~ DVR-2100 LJ :810201~ DVR-2100 UJ :810201~ DVR-2100 EJ :810201~

CARD RACK SV-120 (6/6)/TR-83 BOARD SV-120 (6/6)/TR-83 BOARD CARD RACK

TR-83 BOARD

Envelope Select

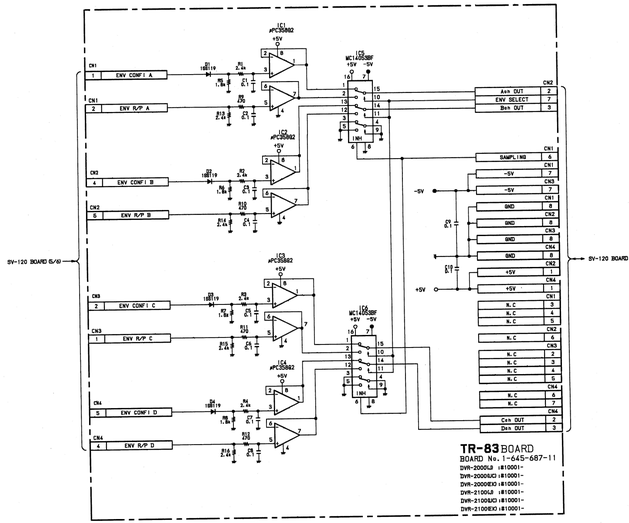

TR-83 BOARD
BOARD No. 1-645-687-11
DVR-2000LJ :810001~
DVR-2000UJ :810001~
DVR-2000EJ :810001~
DVR-2100LJ :810001~
DVR-2100UJ :810001~
DVR-2100EJ :810001~

SV-120 BOARD (6/6)
BOARD NO. 1-639-116-11, -12
DVR-2000 LJ :810001~
DVR-2000 UJ :810001~
DVR-2000 EJ :810001~
DVR-2100 LJ :810001~
DVR-2100 UJ :810001~
DVR-2100 EJ :810001~

SE-144 (1/2) BOARD CARD RACK
CARD RACK SE-144 (1/2) BOARD

SE-144 BOARD (1/2)
Sensor-1

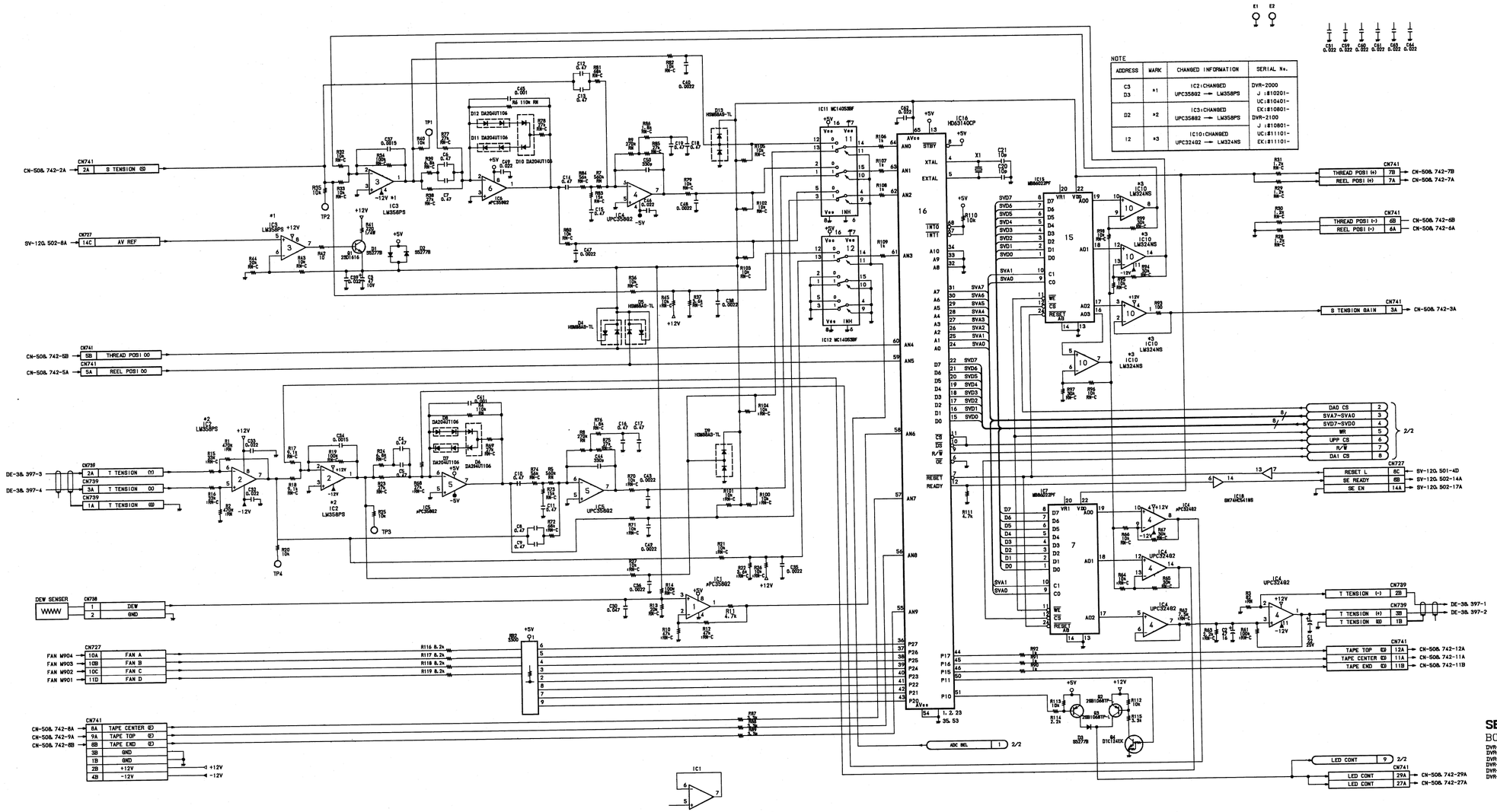
CN-508. 742-2A
S TENSION (2)
SV-120. 502-8A
AV REF
CN-508. 742-5B
THREAD POS1 (0)
CN-508. 742-5A
REEL POS1 (0)
DE-38. 397-3
T TENSION (1)
DE-38. 397-4
T TENSION (0)
T TENSION (2)
DEW SENSER
DEW
GND
FAN M904
FAN M903
FAN M902
FAN M901
FAN A
FAN B
FAN C
FAN D
CN-508. 742-8A
TAPE CENTER (2)
CN-508. 742-9A
TAPE TOP (2)
CN-508. 742-8B
TAPE END (2)
GND
+12V
-12V
THREAD POS1 (+)
REEL POS1 (+)
CN-508. 742-7B
CN-508. 742-7A
THREAD POS1 (-)
REEL POS1 (-)
CN-508. 742-6B
CN-508. 742-6A
S TENSION GAIN
CN-508. 742-3A
DAC CS
SVA7-SVA0
SVD7-SVD0
WR
UPP CS
R/W
DA1 CS
RESET L
SE READY
SE EN
SV-120. 501-4D
SV-120. 502-14A
SV-120. 502-17A
T TENSION (-)
T TENSION (+)
T TENSION (0)
TAPE TOP (0)
TAPE CENTER (0)
TAPE END (0)
CN-508. 742-12A
CN-508. 742-11A
CN-508. 742-11B
LED CONT
CN-508. 742-29A
CN-508. 742-27A
ADC SEL
IC11 MC14053BF
IC12 MC14053BF
IC16 HD63140CP
IC15 MB86022PF
IC17 MB86022PF
IC18 SN74HC541NS
IC1 μPC358G2
IC2 LM358PS
IC3 LM358PS
IC4 UPC324G2
IC5 UPC358G2
IC6 μPC358G2
IC10 LM324NS
D12 DA204UT106
D11 DA204UT106
D10 DA204UT106
D6 DA204UT106
D7 DA204UT106
D8 DA204UT106
D9 DA204UT106
D13 HSM88AS-TL
D14 HSM88AS-TL
D15 HSM88AS-TL
D16 HSM88AS-TL
Q1 2SD1616
Q2 2SB1068TP
Q3 2SB1068TP
Q4 DTC124EK
D3 SS277B
D4 SS277B
D5 SS277B
D6 SS277B
X1 20.0MHz
C20 10p
C21 10p
R110 10k
R111 4.7k
R112 10k
R113 10k
R114 2.2k
R115 3.3k
R116 8.2k
R117 8.2k
R118 8.2k
R119 8.2k
R11 4.7k
R12 10k
R13 10k
R41 1.2k
R42 10k
R43 10k
R44 20k
R45 10k
R46 10k
R47 10k
R48 10k
R49 10k
R50 10k
R51 1.2k
R52 1.2k
R53 1.2k
R54 1.2k
R55 1.2k
R56 1.2k
R57 1.2k
R58 1.2k
R59 1.2k
R60 1.2k
R61 1.2k
R62 1.2k
R63 1.2k
R64 10k
R65 10k
R66 10k
R67 10k
R68 10k
R69 10k
R70 10k
R71 10k
R72 10k
R73 10k
R74 10k
R75 10k
R76 10k
R77 10k
R78 10k
R79 10k
R80 10k
R81 10k
R82 10k
R83 10k
R84 10k
R85 10k
R86 10k
R87 10k
R88 10k
R89 10k
R90 10k
R91 10k
R92 10k
R93 10k
R94 10k
R95 10k
R96 10k
R97 10k
R98 10k
R99 10k
R100 10k
R101 10k
R102 10k
R103 10k
R104 10k
R105 10k
R106 10k
R107 1k
R108 1k
R109 1k
R110 10k
R111 4.7k
R112 10k
R113 10k
R114 2.2k
R115 3.3k
R116 8.2k
R117 8.2k
R118 8.2k
R119 8.2k
R120 10k
R121 10k
R122 10k
R123 10k
R124 10k
R125 10k
R126 10k
R127 10k
R128 10k
R129 10k
R130 10k
R131 10k
R132 10k
R133 10k
R134 10k
R135 10k
R136 10k
R137 10k
R138 10k
R139 10k
R140 10k
R141 10k
R142 10k
R143 10k
R144 20k
R145 10k
R146 10k
R147 10k
R148 10k
R149 10k
R150 10k
R151 10k
R152 10k
R153 10k
R154 10k
R155 10k
R156 10k
R157 10k
R158 10k
R159 10k
R160 10k
R161 10k
R162 10k
R163 10k
R164 10k

SE-144 BOARD (2/2)

Sensor-1

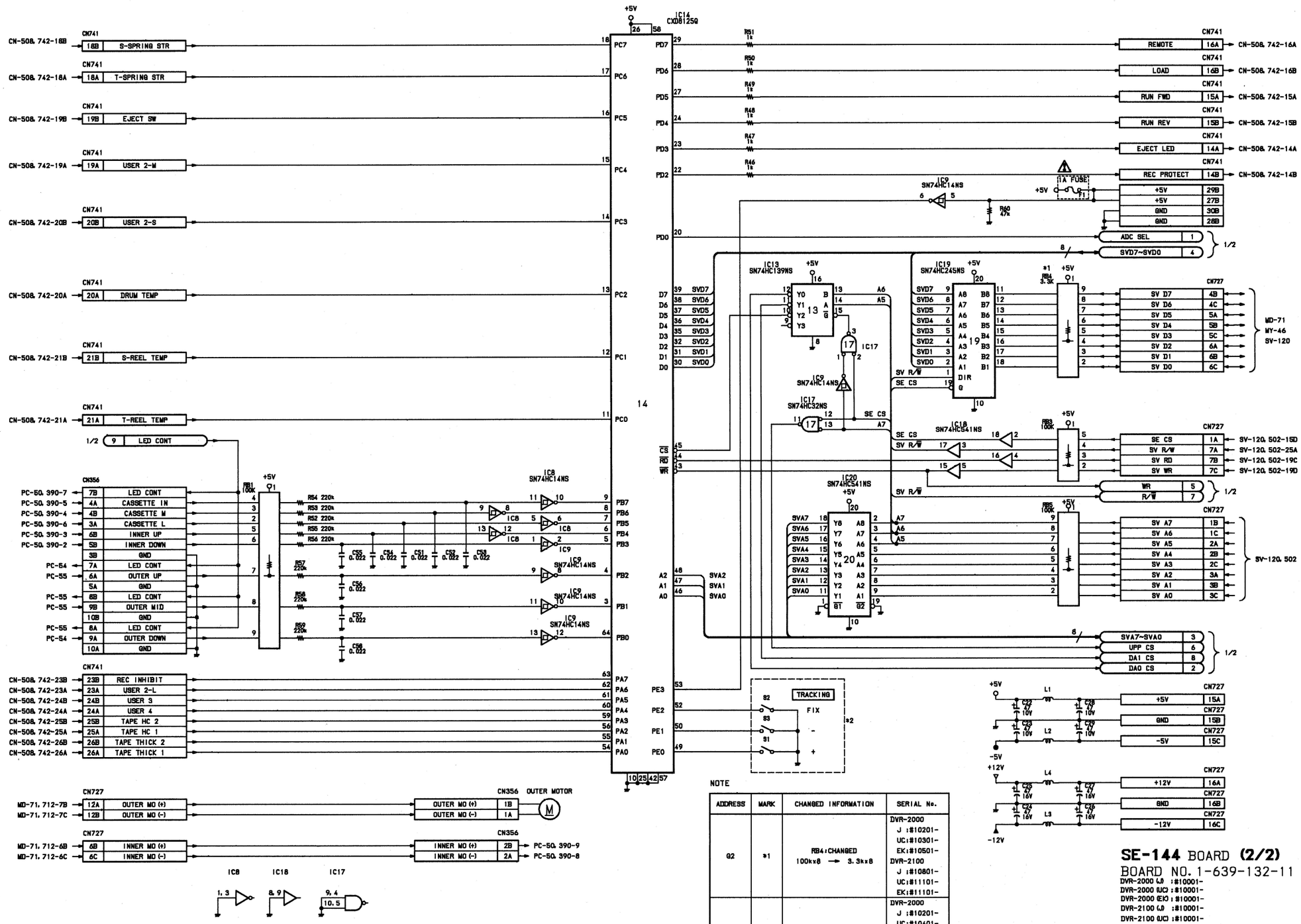

NOTE

ADDRESS	MARK	CHANGED INFORMATION	SERIAL No.
G2	*1	RB4:CHANGED 100k×8 → 3.3k×8	DVR-2000 J :#10201- UC:#10301- EK:#10501- DVR-2100 J :#10801- UC:#11101- EK:#11101-
F4	*2	S1, S2, AND S3 ARE DELETED	DVR-2000 J :#10201- UC:#10401- EK:#10601- DVR-2100 J :#10801- UC:#11101- EK:#11101-

SE-144 BOARD **(2/2)**

BOARD NO. 1-639-132-11

DVR-2000 (J) :#10001-
DVR-2000 (UC) :#10001-
DVR-2000 (EK) :#10001-
DVR-2100 (J) :#10001-
DVR-2100 (UC) :#10001-
DVR-2100 (EK) :#10001-

19-121

CN-508 BOARD

SE-144 Board Relaying

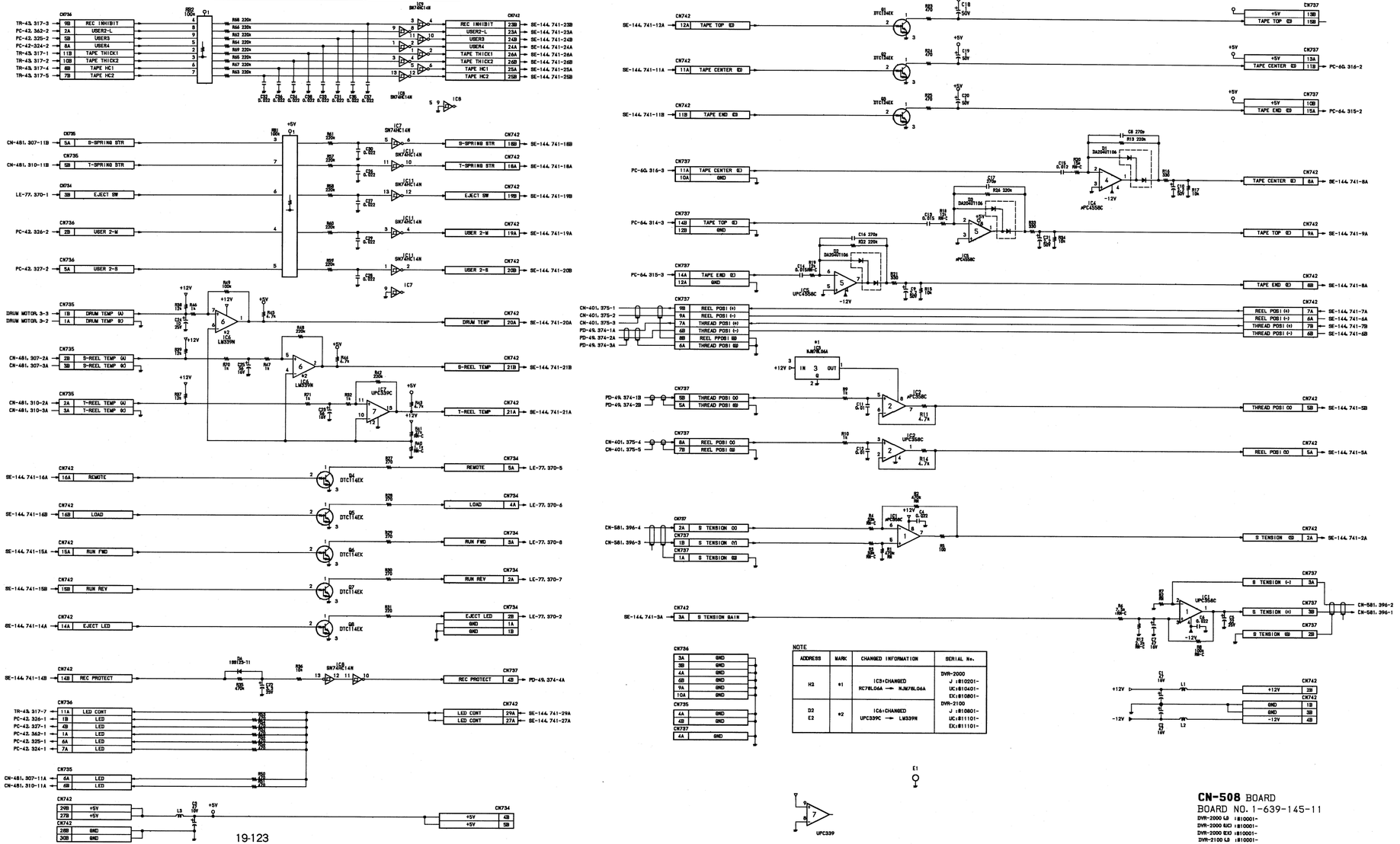

CARD RACK MD-71 (1/3) BOARD MD-71 (1/3) BOARD CARD RACK

MD-71 BOARD (1/3)

Motor Driver

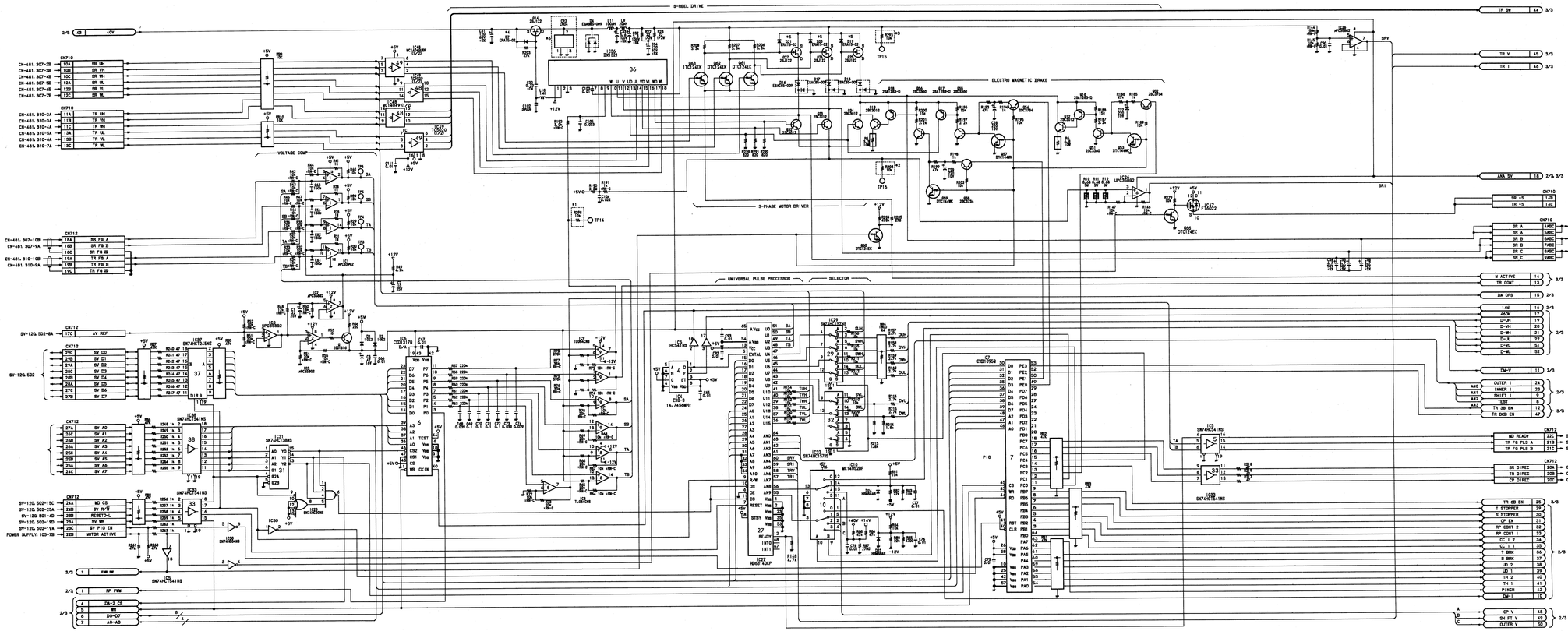

NOTE			
ADDRESS	MARK	CHANGED INFORMATION	SERIAL NO.
Q2	*1	R298 IS ADDED	DVR-2000 J :#810201- UC:#810201- EX:#810401-
I2	*2	R308 IS ADDED	DVR-2100 J :#810701- UC:#810701- EX:#810701-
I1	*3	R293 IS ADDED	DVR-2000 J :#810201- UC:#810601- EX:#810501-
F1	*4	D7:CHANGED ERB44-02 → ERA15-02	DVR-2100 J :#810901- UC:#811101- EX:#811101-
I1:D19 I1:D20 H1:D21	*5	D19:D21:CHANGED ERB44-02 → ERA15-02	DVR-2000 J :#810401- UC:#810901- EX:#811201- DVR-2100 J :#811101- UC:#811201- EX:#811201-
Q1	*6	CR2 IS DELETED.	

MD-71 BOARD **(1/3)**

BOARD NO. 1-639-122-11. -12

DVR-2000 LJ :#810001-
DVR-2000 KJ :#810001-
DVR-2000 EX0 :#810001-
DVR-2100 LJ :#810001-
DVR-2100 KJ :#810001-
DVR-2100 EX0 :#810001-

19-125

MD-71 BOARD (2/3)

Motor Driver

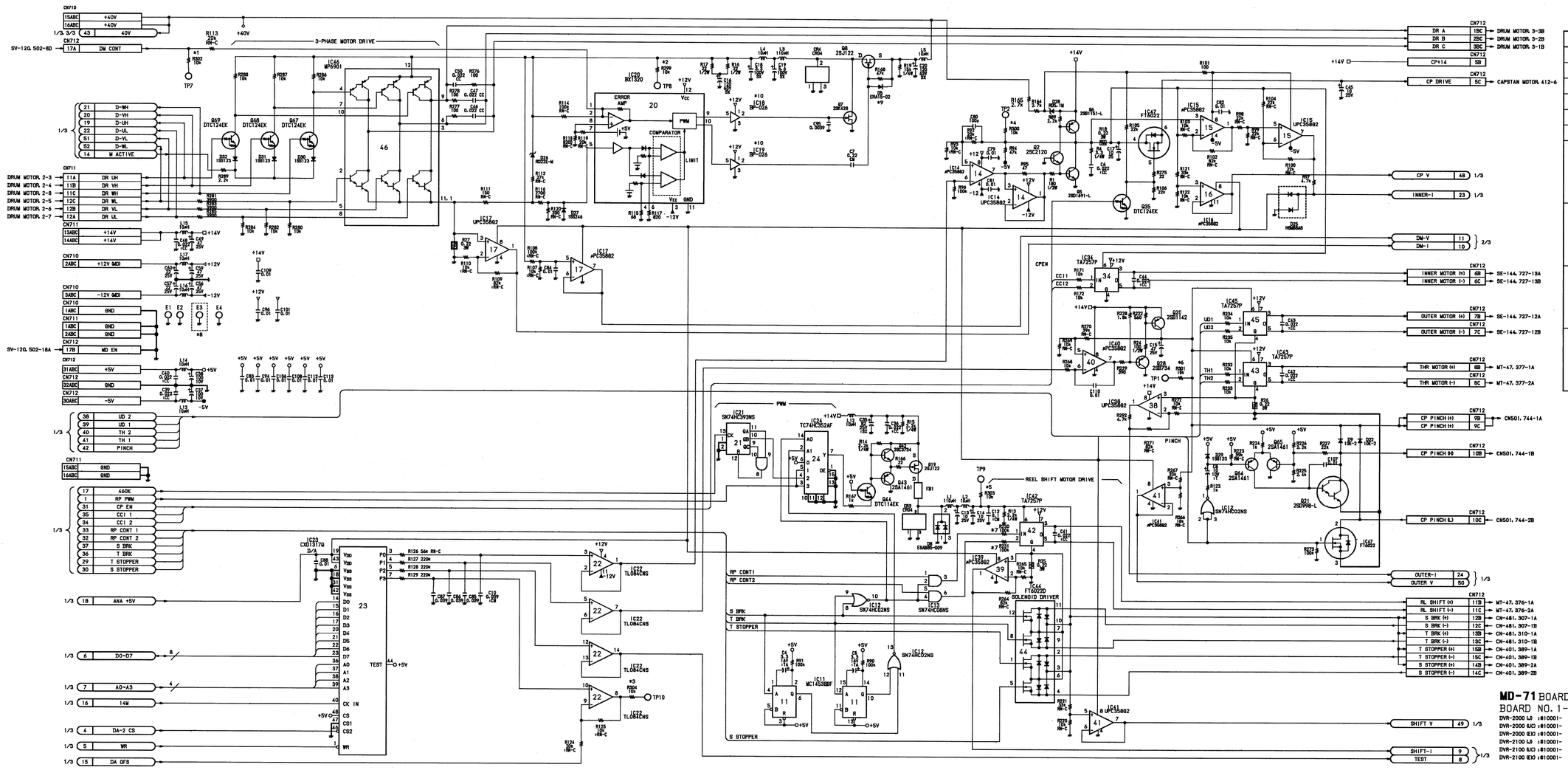

NOTE

ADDRESS	MARK	CHANGED INFORMATION	SERIAL NO.
C1	*1	R302 IS ADDED	DVR-2000 J :#10201- UC:#10201- EK:#10401- DVR-2100 J :#10701- UC:#10701- EK:#10701-
F1	*2	R299 IS ADDED	
F5	*3	R304 IS ADDED	
H1	*4	R300 IS ADDED	
H4	*5	R303 IS ADDED	
I3	*6	R301 IS ADDED	
H4	*7	R230 AND R231 ARE CHANGED. 10K → 100K	DVR-2000 J :#10201- UC:#10301- EK:#10401- DVR-2100 J :#10601- UC:#10601- EK:#10601-
C2	*8	E3 IS DELETED	DVR-2000 J :#10201- UC:#10401- EK:#10601- DVR-2100 J :#10601- UC:#11101- EK:#11101-
B1	*9	D5:CHANGED ERB44-02 → ERA15-02	DVR-2000 J :#10201- UC:#10601- EK:#11001- DVR-2100 J :#10901- UC:#11101- EK:#11101-
F1	*10	IC1& IC19:CHANGED BX1281 → BP-026	DVR-2000 J :#10301- UC:#10801- EK:#11101- DVR-2100 J :#11001- UC:#11101- EK:#11101-

MD-71 BOARD **(2/3)**

BOARD NO. 1-639-122-11, -12

DVR-2000 LJ :#10001-
DVR-2000 EJ:#10001-
DVR-2000 EK:#10001-
DVR-2100 LJ :#10001-
DVR-2100 EJ:#10001-
DVR-2100 EK:#10001-

CARD RACK MD-71 (3/3) BOARD

MD-71 BOARD (3/3)
Motor Driver

NOTE

ADDRESS	MARK	CHANGED INFORMATION	SERIAL NO.
D2	#1	R306 IS ADDED	DVR-2000 J :#10201- UC:#10201- EX:#10401- DVR-2100 J :#10701- UC:#10701- EX:#10701-
G1	#2	R305 IS ADDED	
F4	#3	R307 IS ADDED	
D1	#4	D6:CHANGED ERB44-02 → ERA15-02	DVR-2000 J :#10201- UC:#10601- EX:#11001-
F1	#5	D10-D12:CHANGED ERB44-02 → ERA15-02	DVR-2100 J :#10901- UC:#11101- EX:#11101-
D1	#6	CR1 IS DELETED.	DVR-2000 J :#10401- UC:#10901- EX:#11201- DVR-2100 J :#11101- UC:#11201- EX:#11201-

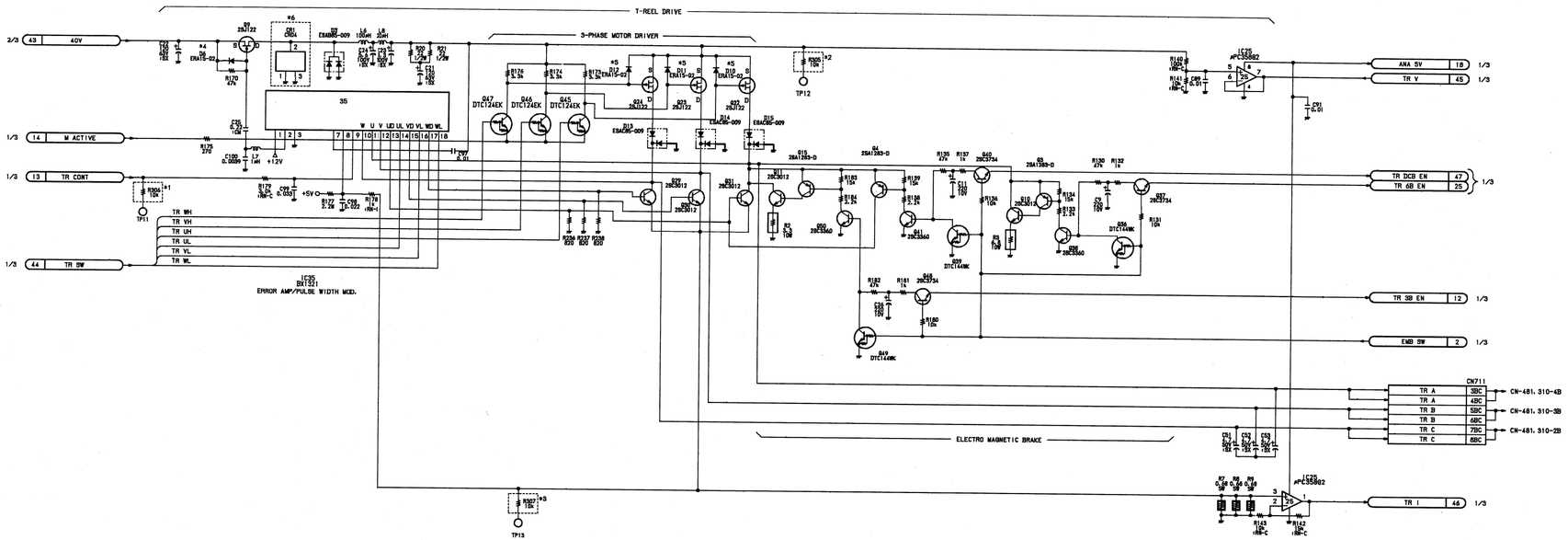

MD-71 BOARD **(3/3)**
BOARD NO. 1-639-122-11, -12

DVR-2000 LJ :#10001-
DVR-2000 UC :#10001-
DVR-2000 EX :#10001-
DVR-2100 LJ :#10001-
DVR-2100 UC :#10001-
DVR-2100 EX :#10001-

19-129

MY-46 BOARD MY-46 BOARD

MY-46 BOARD
NOV-RAM/Timer

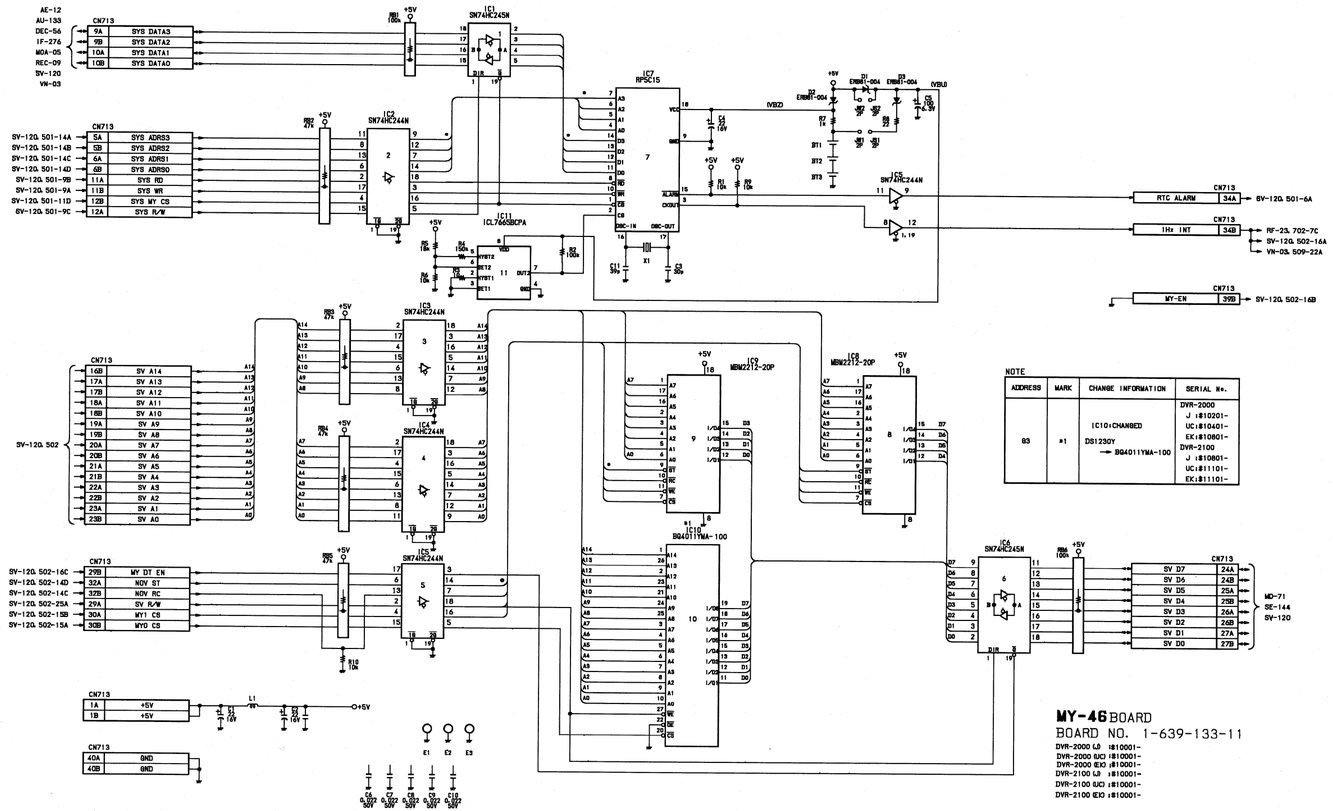

NOTE

ADDRESS	MARK	CHANGE INFORMATION	SERIAL No.
83	*1	IC10:CHANGED DS1230Y → BQ4011YMA-100	DVR-2000 J :810201- UC:810401- EX:810801- DVR-2100 J :810801- UC:811101- EX:811101-

MY-46 BOARD
BOARD NO. 1-639-133-11

DVR-2000 LJ :810001-
DVR-2000 UC) :810001-
DVR-2000 EX) :810001-
DVR-2100 LJ :810001-
DVR-2100 UC) :810001-
DVR-2100 EX) :810001-

19-130

VIO-15 BOARD

VIO-15 BOARD

Digital Video I/O

NOTE

ADDRESS	MARK	CHANGED INFORMATION	SERIAL NO.
D1	*1	TP6 IS ADDED	DVR-2000 J :810201- UC:810201- EK:810301- DVR-2100 J :810601- UC:810601- EK:810601-
F2	*2	D2 IS DELETED. AND Q2 IS ADDED. D2:1S1587	
H2	*3	CN102 AND JS1 ARE ADDED.	
C3	*4	R187 THRU R208 ARE ADDED.	DVR-2000 J :810201- UC:810301- EK:810601- DVR-2100 J :810801- UC:811101- EK:811101-
C5	*5	R209 THRU R230 ARE ADDED.	
H2	*6	CN102 IS DELETED AND JP2 IS ADDED	
H2	*7	CN101 IS DELETED AND JP1 IS ADDED	

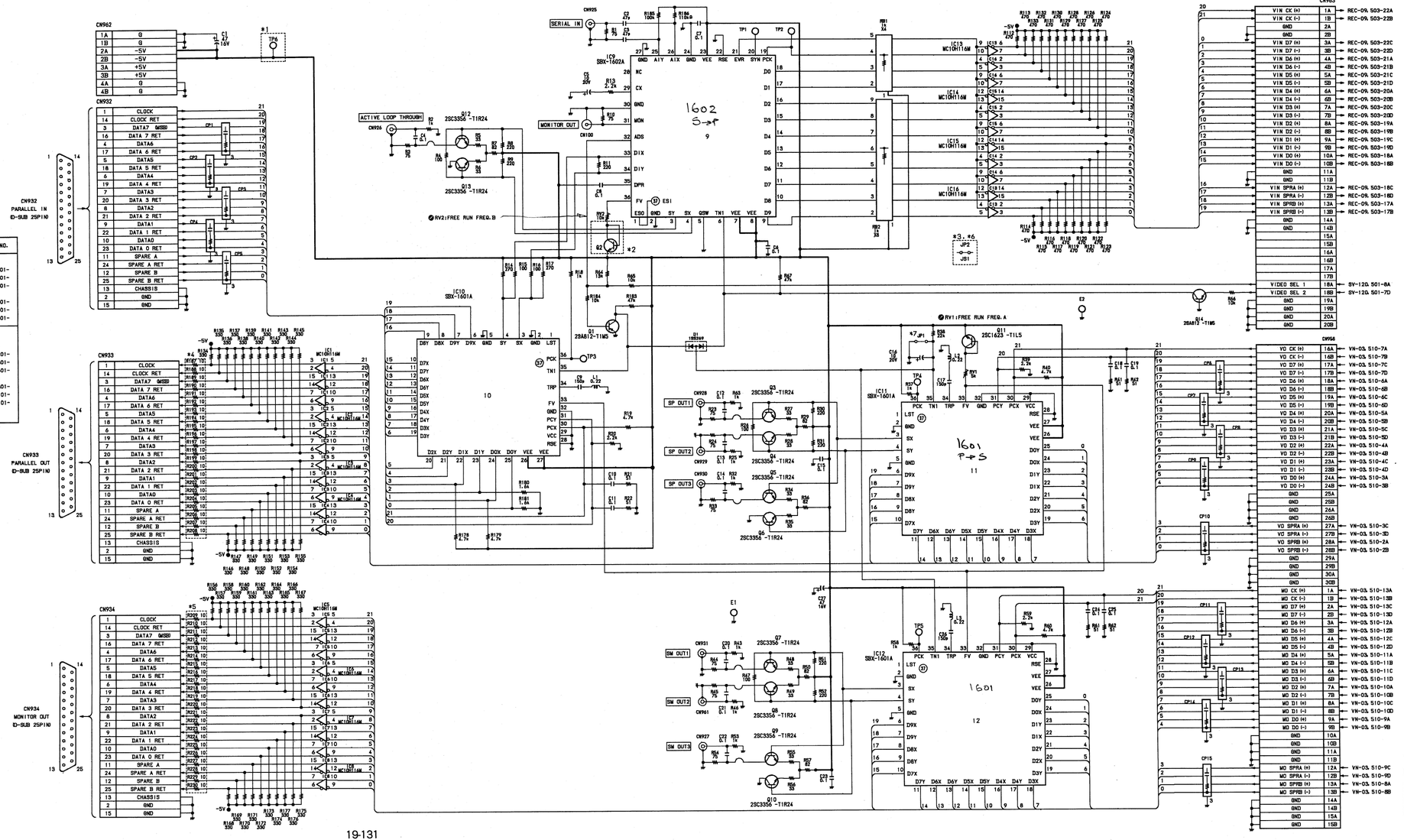

VIO-15 BOARD
BOARD NO. 1-639-126-11, -12, -13

DVR-2000 LB :810001-
DVR-2000 UC3 :810001-
DVR-2000 EK3 :810001-
DVR-2100 LB :810001-
DVR-2100 UC3 :810001-
DVR-2100 EK3 :810001-

19-131

VIO-16 BOARD VIO-16 BOARD

VIO-16 BOARD

Reference Video I/O

NOTE

ADDRESS	MARK	CHANGED INFORMATION	SERIAL NO.
F2	*1	C1:39p → 47p	DVR-2000 J :#10201- UC:#10201- EK:#10301- DVR-2100 J :#10601- UC:#10601- EK:#10601-
F1	*2	REFERENCE NO. IS CHANGED:R42 → R18	
F4	*3	TP12 IS ADDED.	
B3	*4	D1 → Q1 D1 IS DELETED AND Q1 IS ADDED D1:1SS187	
	*5	R42 IS ADDED	
I3	*6	TP8, TP9, TP10 AND TP11 ARE ADDED.	
I1	*7	IC5:CHANGED CXD8069G → CXD8069BG	DVR-2000 J :#10201- UC:#10501- EK:#10901- DVR-2100 J :#10901- UC:#11101- EK:#11101-

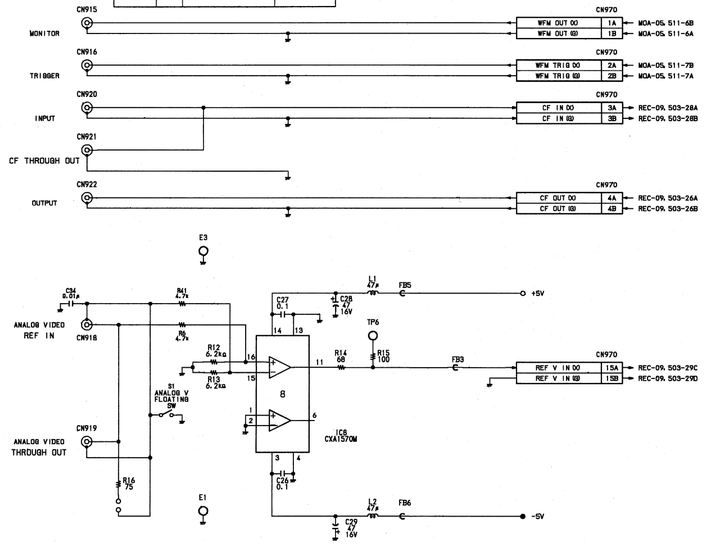

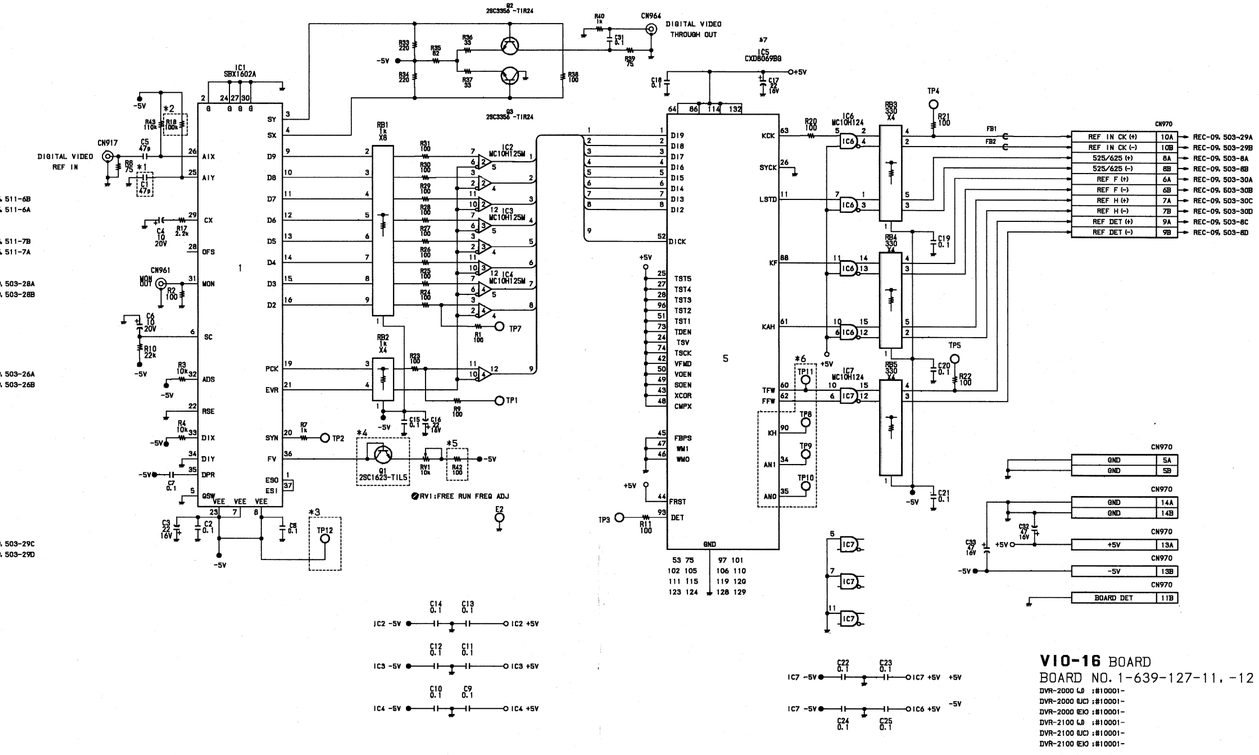

VIO-16 BOARD

BOARD NO. 1-639-127-11, -12

DVR-2000 LJ :#10001-
DVR-2000 UC :#10001-
DVR-2000 EK :#10001-
DVR-2100 LJ :#10001-
DVR-2100 UC :#10001-
DVR-2100 EK :#10001-

19-132

IF-276 BOARD IF-276 BOARD

IF-276 BOARD
System Control I/O

DVR-2000	DVR-2100
J : S/N 10201 and higher	J : S/N 10801 and higher
UC : S/N 10301 and higher	UC : S/N 11101 and higher
EK : S/N 10601 and higher	EK : S/N 11101 and higher

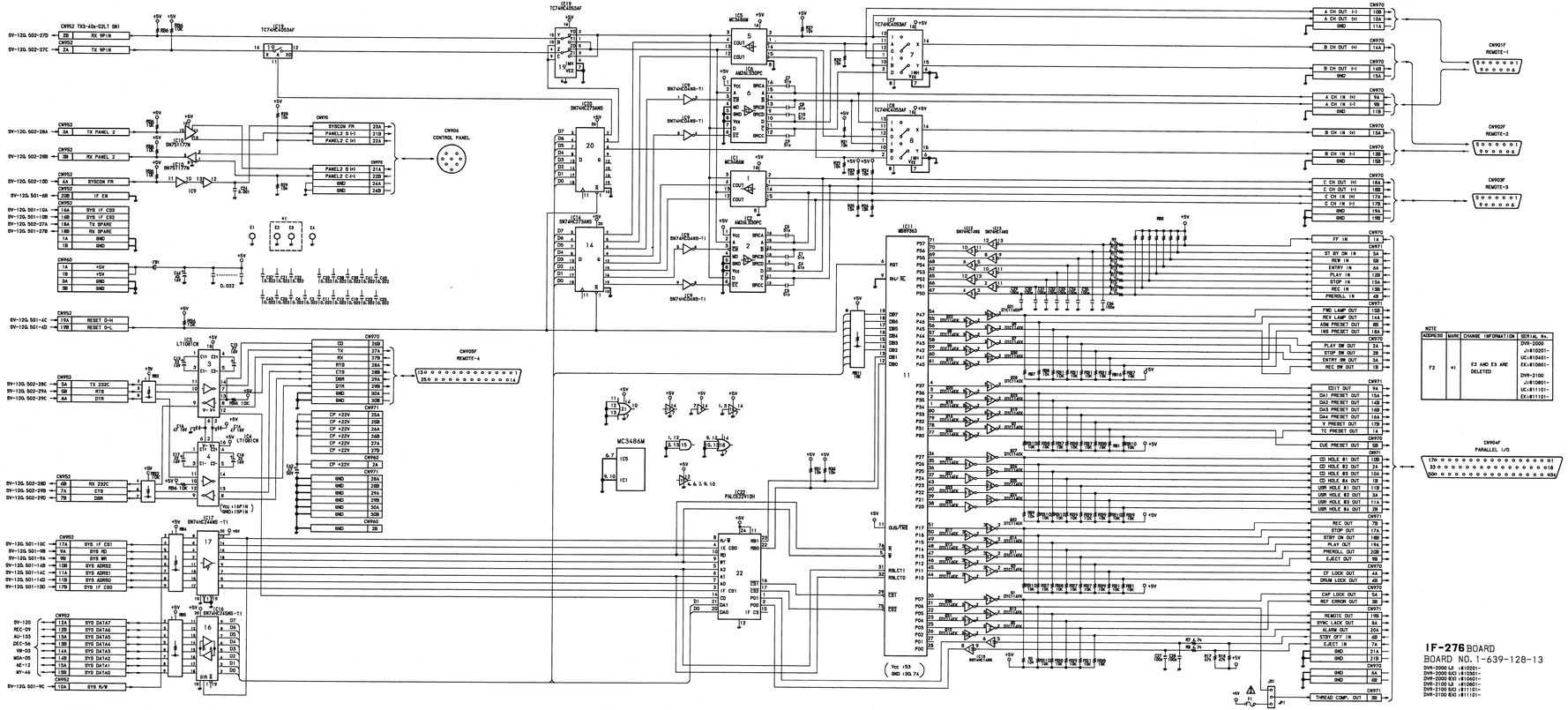

NOTE			
ADDRESS	MARK	CHANGE INFORMATION	SERIAL No.
F2	+1	E2 AND E3 ARE DELETED	DVR-2000 J:810201- UC:810401- EK:810601- DVR-2100 J:810801- UC:811101- EK:811101-

IF-276 BOARD
BOARD NO. 1-639-128-13

DVR-2000 LS :810201-
DVR-2000 SCO :810301-
DVR-2000 EK3 :810601-
DVR-2100 LS :810801-
DVR-2100 SCO :811101-
DVR-2100 EK3 :811101-

19-133 (b)

IF-276 BOARD IF-276 BOARD

IF-276 BOARD

System Control I/O

DVR-2000	DVR-2100
J ; S/N 10001 through 10198	J ; S/N 10001 through 10799
UC ; S/N 10001 through 10299	UC ; S/N 10001 through 11099
EK ; S/N 10001 through 10599	EK ; S/N 10001 through 11099

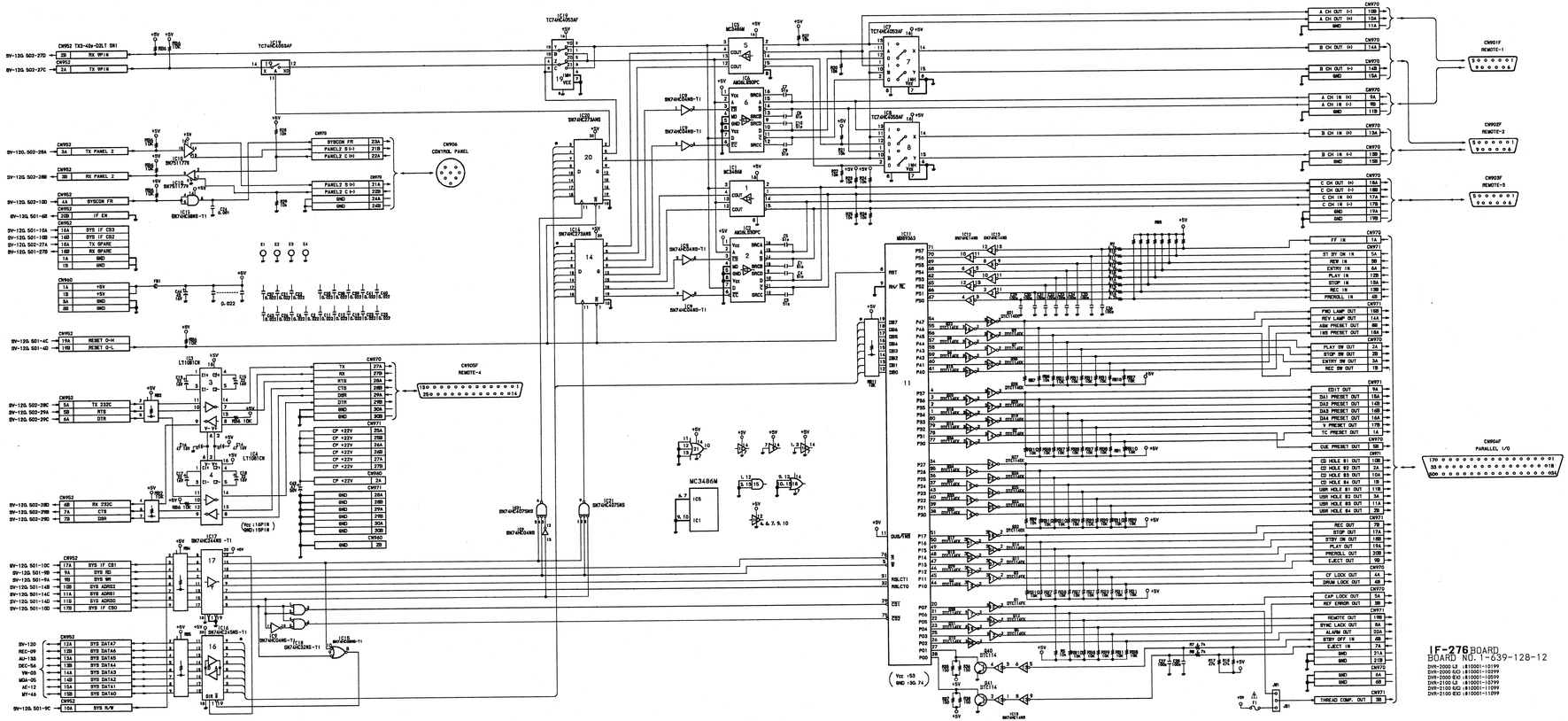

ASW-22 BOARD ASW-22 BOARD

ASW-22 BOARD

Digital Audio I/O Selector

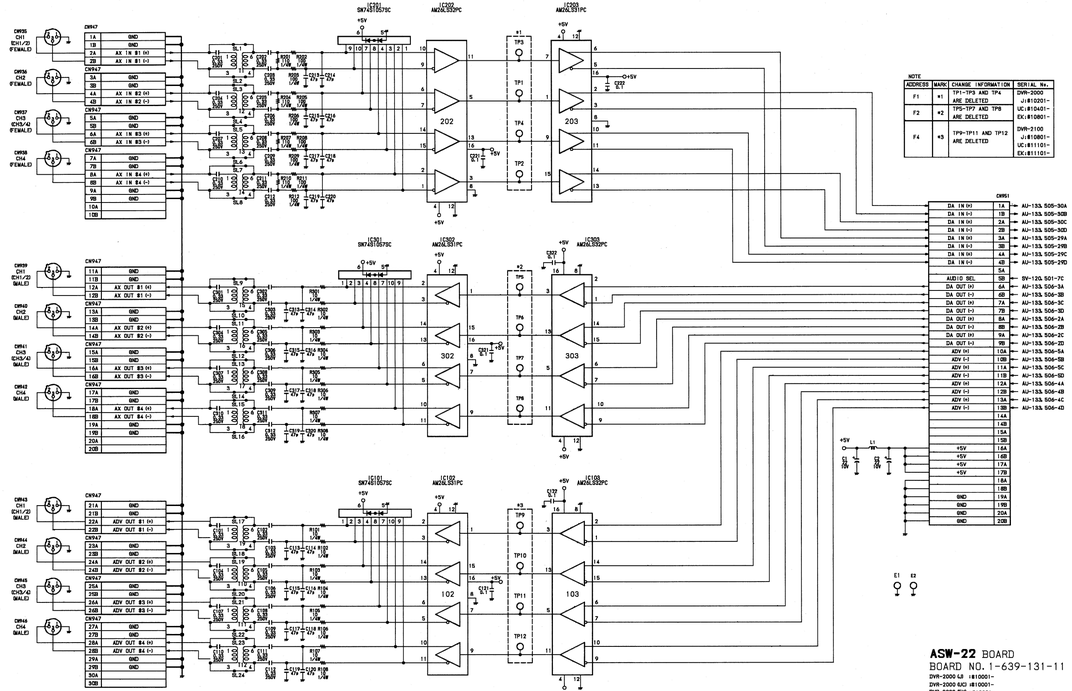

NOTE

ADDRESS	MARK	CHANGE INFORMATION	SERIAL No.
F1	*1	TP1-TP3 AND TP4 ARE DELETED	DVR-2000 J:810201- UC:810401- EX:810801-
F2	*2	TP5-TP7 AND TP8 ARE DELETED	
F4	*3	TP9-TP11 AND TP12 ARE DELETED	DVR-2100 J:810801- UC:811101- EX:811101-

ASW-22 BOARD
BOARD NO. 1-639-131-11

DVR-2000 LJ :810001-
DVR-2000 LKJ :810001-
DVR-2000 EKJ :810001-
DVR-2100 LJ :810001-
DVR-2100 LKJ :810001-
DVR-2100 EKJ :810001-

PD-49 BOARD

Power Rotary Transformer Driver

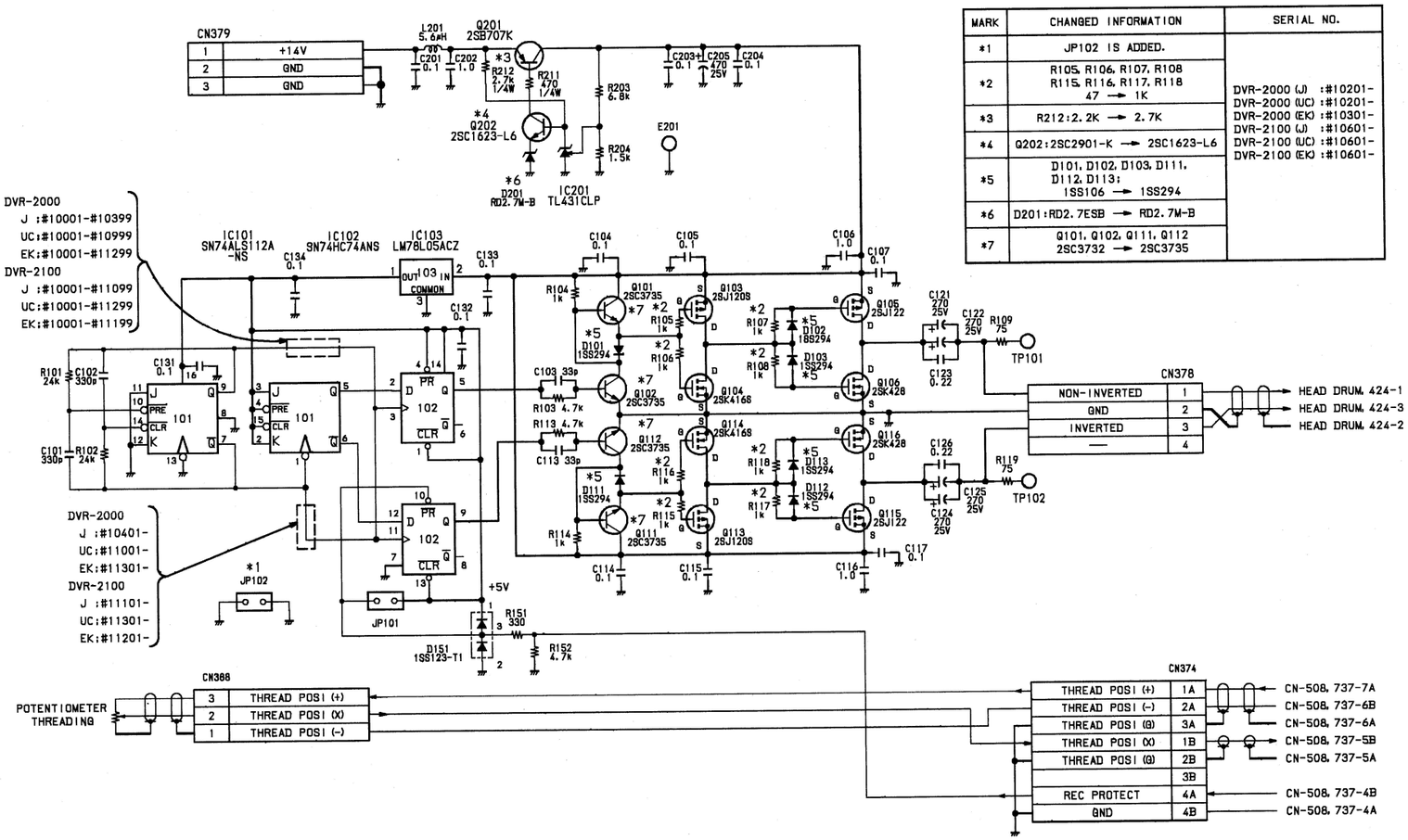

MARK	CHANGED INFORMATION	SERIAL NO.
*1	JP102 IS ADDED.	DVR-2000 (J) :#10201- DVR-2000 (UC) :#10201- DVR-2000 (EK) :#10301- DVR-2100 (J) :#10601- DVR-2100 (UC) :#10601- DVR-2100 (EK) :#10601-
*2	R105, R106, R107, R108 R115, R116, R117, R118 47 → 1K	
*3	R212:2.2K → 2.7K	
*4	Q202:2SC2901-K → 2SC1623-L6	
*5	D101, D102, D103, D111, D112, D113: 1SS106 → 1SS294	
*6	D201:RD2.7ESB → RD2.7M-B	
*7	Q101, Q102, Q111, Q112 2SC3732 → 2SC3735	

PD-49 BOARD
BOARD NO. 1-639-140-11, -12

DVR-2000 (J) :#10001-
DVR-2000 (UC) :#10001-
DVR-2000 (EK) :#10001-
DVR-2100 (J) :#10001-
DVR-2100 (UC) :#10001-
DVR-2100 (EK) :#10001-

19-135

POWER SUPPLY CT-133, FU-53, PS-256, RE-52
CT-133, FU-53, PS-256, RE-52 POWER SUPPLY
POWER SUPPLY CT-133, FU-53, PS-256, RE-52

POWER SUPPLY
CT-133 BOARD
FU-53 BOARD
PS-256 BOARD
RE-52 BOARD

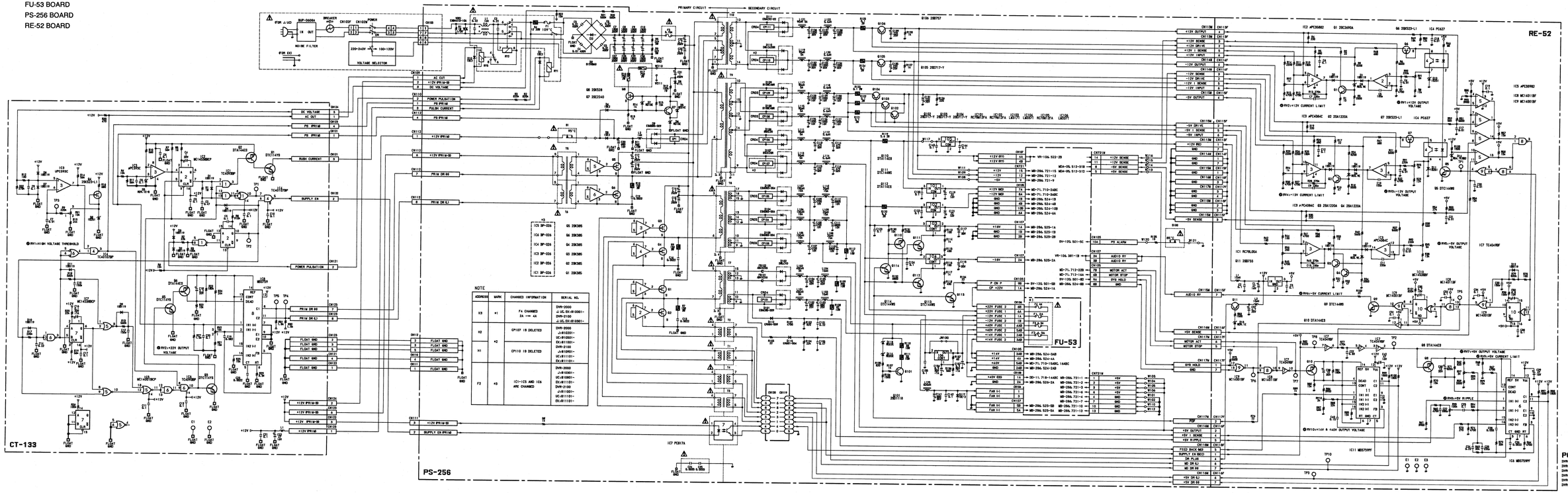

19-137

MB-285 BOARD (1/3)
Mother Board

RF-23

CK701

	C	B	A
32	0	0	0
31	+12V	+12V	+12V
30	-12V	-12V	-12V
29			
28			
27			
26			
25			
24			
23			
22			
21			
20			
19			
18			
17			
16			
15			
14			
13			
12		ENV REC	
11			
10		ENV STUNT A	ENV CONF I A
9			
8		ENV STUNT B	ENV CONF I B
7			
6		ENV STUNT C	ENV CONF I C
5			
4		ENV STUNT D	ENV CONF I D
3			
2		SYSCON FR	PB PULSE
1	0	0	0

	C	B	A
16	0	0	0
15	RF EN	RF BUS REQ	RF BUS ACQ
14		RF DATA7	RF ADRS7
13		RF DATA6	RF ADRS6
12		RF DATA5	RF ADRS5
11		RF DATA4	RF ADRS4
10		RF DATA3	RF ADRS3
9		RF DATA2	RF ADRS2
8	1F ERR RF	RF DATA1	RF ADRS1
7	1HZ INT	RF DATA0	RF ADRS0
6	SYS HOLD	RF R/W	RF WR
5	SYS READY	RF DUAL	RF RD
4	RESETO-L	BUSY 1	RF SV CS
3	-5V	-5V	-5V
2	+5V	+5V	+5V
1	0	0	0

	C	B	A
16			
15			
14	RF ADRS11		
13	RF ADRS8	RF ADRS9	RF ADRS10
12			
11	AUX 1	AUX 2	AUX 3
10	AUX 4		
9			
8			
7			
6			
5			
4			
3			
2			
1			

SE-144

CK727

	C	B	A
16	-12V	0	+12V
15	-5V	0	+5V
14	AV REF		SE EN
13	AUX 1	INNER MO I-3	INNER MO IH
12	AUX 2	OUTER MO I-3	OUTER MO IH
11	AUX 3		FAN D
10	FAN C	FAN B	FAN A
9	AUX 4		
8	RESETO-L	SE READY	
7	SV WR	SV RD	SV R/W
6	SV D0	SV D1	SV D2
5	SV D3	SV D4	SV D5
4	SV D6	SV D7	
3	SV A0	SV A1	SV A2
2	SV A3	SV A4	SV A5
1	SV A6	SV A7	SE CS

DVR-2100 ONLY

CK722
(TO CN-501)

1	STB 00	
2	-5V	
3	STB 2 D1	
4	STB 3 D0	
5	STB 1 D1	
6	STB 1 D0	
7	DT DRV 2 00	
8	DT DRV 1 00	

CK720
(TO DRUM MOTOR, CAPSTAN MOTOR)

	B	A
1	DRUM FG (A)	CAPS FG (A)
2	DRUM FG (B)	CAPS FG (B)
3	DRUM PG 00	CAPS PG 00
4	DRUM PG (B)	+12V
5	DRUM PG (B)	

DVR-2100 ONLY

DT-26

CK704

	C	B	A
32	0	0	0
31	+12V	+12V	+12V
30	-12V	-12V	-12V
29	CAPS FG (B)	CAPS FG (B)	CAPS FG (A)
28			
27	DRUM FG (B)	DRUM FG (B)	DRUM FG (A)
26			
25			
24			
23			
22			
21			
20			
19			
18			
17			
16			
15			
14			
13			
12			
11			
10		DT-VN-3	DT-VN-2
9	DT-VN-1	DT-VN-0	
8	AUX 1	AUX 2	AUX 3
7	AUX 4		
6	RF ADRS11		
5	RF ADRS8	RF ADRS9	RF ADRS10
4			
3			
2	CTL PB	SYSCON FR	PB PULSE
1	0	0	0

CK705

	C	B	A
16	0	0	0
15	DT EN	RF BUS REQ	RF BUS ACQ
14	DT DIR	RF DATA7	RF ADRS7
13	DT ALARM	RF DATA6	RF ADRS6
12		RF DATA5	RF ADRS5
11	SV DT 4	RF DATA4	RF ADRS4
10	SV DT 3	RF DATA3	RF ADRS3
9	SV DT 2	RF DATA2	RF ADRS2
8	SV DT 1	RF DATA1	RF ADRS1
7		RF DATA0	RF ADRS0
6	SYS HOLD	RF R/W	RF WR
5	SYS READY	RF DUAL	RF RD
4	RESETO-L	BUSY 1	RF SV CS
3	-5V	-5V	-5V
2	+5V	+5V	+5V
1	0	0	0

CK706

	C	B	A
16			
15			
14		ENV STUNT A	ENV CONF I A
13			
12		ENV STUNT B	ENV CONF I B
11			
10		ENV STUNT C	ENV CONF I C
9			
8		ENV STUNT D	ENV CONF I D
7			
6			
5	STB 00	STB 2 D1	STB 2 D0
4			
3	STB 00	STB 1 D1	STB 1 D0
2			
1	DD EN	DR SENSE 2	DR SENSE 1
2			
1	DRE 00	DRE 2 D0	DRE 1 D0

DD-11

CK718

	C	B	A
16	0	0	0
15	+12V	+12V	
14	+5V	+5V	
13			
12			
11			
10		DRE 2 D0	DRE 00
9			
8			
7			DR SENSE 1
6			DR SENSE 2
5			
4			
3			
2			
1			

CK716
(TO AH-33, AH-24)

	A	B
1	FULL ERS 00	TC ERS 00
2	FULL ERS (T)	TC ERS (T)
3	FULL ERS 0P	TC ERS 0P
4	CUE ERS 00	CUE ERS (T)
5	CTL ERS 0P	CUE ERS 0P
6	CTL ERS 00	CTL ERS (T)

AE-12

CK707

	C	B	A
32	0	0	0
31	+12V	+12V	+12V
30	-12V	-12V	-12V
29	CTL ERS 00	CTL ERS (T)	CTL ERS 0P
28			
27	FULL ERS 00	FULL ERS (T)	FULL ERS 0P
26			
25			
24	CUE ERS 00	CUE ERS (T)	CUE ERS 0P
23			
22			
21	TC ERS 00	TC ERS (T)	TC ERS 0P
20			
19	AUX 1	AUX 2	AUX 3
18	AUX 4		
17	SYS READY	SYS ADRS2	SYS ADRS1
16	SYS ADRS0	SYS DATA7	SYS DATA6
15	SYS DATA5	SYS DATA4	SYS DATA3
14	SYS DATA2	SYS DATA1	SYS DATA0
13	AE CS1	AE CS0	SYS WR
12	SYS RD	SYS R/W	RESETO-L
11			
10	TC 0EN	TC RD	CTL PB
9			AE/SV SPR
8			
7			CUE MOUT 00
6	TC LOUT 00	TC LOUT 0P	CUE MOUT 0P
5	CUE LOUT 00	CUE LOUT 0P	
4	CUE PB 0 00	CUE PB 0 0P	
3	MFW CTLO 00	MFW CTLO 0P	
2	CUE REC 0 00	CUE REC 0 0P	
1	0	0	0

CK708

	C	B	A
16	G AE GND	G AE GND	G AE GND
15			AE EN
14	CUE IN 00	CUE IN 0P	CUE METER 00
13			CUE METER 0P
12			
11			
10			
9			
8			
7			
6	TC PB 00	TC PB 0P	TC RY
5	PA TC REC 00	PA TC REC (T)	PA TC REC 0P
4	REC CTL 00	REC CTL 0P	
3	-5V	-5V	-5V
2	+5V	+5V	+5V
1	0	0	0

CK709

	C	B	A
16	PA CTL REC 00	PA CTL REC (T)	PA CTL REC 0P
15	DRUM PB 00	DRUM PB 0P	DRUM RY
14			
13			
12	CONF I PB 00	CONF I PB 0P	CONF I RY
11			
10			
9	CUE PB 00	CUE PB 0P	CUE RY
8	PA CUE REC 00	PA CUE REC (T)	PA CUE REC 0P
7			
6			
5		AE +6V	AE -6V
4			
3			
2			
1			

CK723
(TO DRUM MOTOR)

	B	A
1	SV D5	SV A
2	SV D6	SV A1
3	SV D7	SV A2
4		DRUM DIR
5		SV D4
6		SV WL
7		SV WH
8		SV D3
9		SV D2
10		SV D1
11		SV D0
12		SV RD
13		SV R/W
14		SV WR
15		SV CS
16		SV RY
17		SV D0
18		SV D1
19		SV D2
20		SV D3
21		SV D4
22		SV D5
23		SV D6
24		SV D7
25		SV A
26		SV A1
27		SV A2
28		SV A3
29		SV A4
30		SV A5
31		SV A6
32		SV A7

CK715
(TO PA-142)

	A	B
1	PA CUE REC 00	PA CUE REC 0P
2	CUE PB 00	CUE PB 0P
3	CUE PB 0P	CUE PB 00
4	DRUM PB 00	DRUM PB 0P
5	DRUM PB 0P	DRUM PB 00
6	PA CTL REC 00	PA CTL REC 0P
7	CONF I PB 00	CONF I PB 0P
8	CONF I PB 0P	CONF I PB 00
9	TC PB 00	TC PB 0P
10	TC PB 0P	TC PB 00
11	PA TC REC 00	PA TC REC 0P
12	PA TC REC 0P	PA TC REC 00

CK725
(TO CN-481, CN-481 (T), CN-401, MT-47, CAPSTAN MOTOR)

	B	A
1	PA CUE REC (T)	PA CUE REC (T)
2	PA CUE REC 0P	PA CUE REC 00
3	PA CUE REC (T)	PA CUE REC 0P
4	PA CUE REC 00	PA CUE REC (T)
5	PA CTL REC 0P	PA CTL REC 00
6	PA CTL REC (T)	PA CTL REC (T)
7	PA CTL REC 00	PA CTL REC 0P
8	PA TC REC 0P	PA TC REC 00
9	PA TC REC (T)	PA TC REC (T)
10	PA TC REC 00	PA TC REC 0P
11	TC PB 00	TC PB 0P
12	TC PB 0P	TC PB 00
13	PA TC REC 0P	PA TC REC 00
14	PA TC REC 00	PA TC REC (T)

MOTHER BOARD MB-285 (1/3) MB-285 (1/3) MOTHER BOARD

MB-286

CK726
(TO CN-481 (T), CN-481 (2))

	B	A
1	SV D5	SV A
2	SV D6	SV A1
3	SV D7	SV A2
4		DRUM DIR
5		SV D4
6		SV WL
7		SV WH
8		SV D3
9		SV D2
10		SV D1
11		SV D0
12		SV RD
13		SV R/W
14		SV WR
15		SV CS
16		SV RY
17		SV D0
18		SV D1
19		SV D2
20		SV D3
21		SV D4
22		SV D5
23		SV D6
24		SV D7
25		SV A
26		SV A1
27		SV A2
28		SV A3
29		SV A4
30		SV A5
31		SV A6
32		SV A7

MD-71

CK710

	A	B	C
1	0	0	0
2	+12V 0ED	+12V 0ED	+12V 0ED
3	-12V 0ED	-12V 0ED	-12V 0ED
4	SR A	SR A	SR A
5	SR A	SR A	SR A
6	SR B	SR B	SR B
7	SR B	SR B	SR B
8	SR C	SR C	SR C
9	SR C	SR C	SR C
10	SR UH	SR VH	SR WH
11	TR UH	TR VH	TR WH
12	SR UL	SR VL	SR WL
13	TR UL	TR VL	TR WL
14		SR +5V	TR +5V
15	+40V	+40V	+40V
16	+40V	+40V	+40V

CK711

	A	B	C
1	0	0	0
2	0	0	0
3	TR A	TR A	TR A
4	TR A	TR A	TR A
5	TR B	TR B	TR B
6	TR B	TR B	TR B
7	TR C	TR C	TR C
8	TR C	TR C	TR C
9			
10			
11	DR UH	DR VH	DR WH
12	DR UL	DR VL	DR WL
13	+14V	+14V	+14V
14	+14V	+14V	+14V
15	0	0	0
16	0	0	0

CK712

	A	B	C
1	AUX 1	DR A	DR A
2	AUX 2	DR B	DR B
3	AUX 3	DR C	DR C
4	AUX 4		
5		CP +14V	CP DRIVE
6		INNER MO IH	INNER MO I-3
7		OUTER MO IH	OUTER MO I-3
8		THREAD MO IH	THREAD MO I-3
9		CP PINCH IH	CP PINCH IH
10		CP PINCH 0P	CP PINCH 0J
11		RL SHIFT IH	RL SHIFT I-3
12		S-BRK IH	S-BRK I-3
13		T-BRK IH	T-BRK I-3
14		S-STOPPER IH	S-STOPPER I-3
15		T-STOPPER IH	T-STOPPER I-3
16	MOTOR STOP		
17	DM CONT	MD EN	AV REF
18	SR FB 0AJ	SR FB 0B	SR FB 0A
19	TR FB 0AJ	TR FB 0B	TR FB 0B
20	SR DIREC	TR DIREC	CP DIREC
21		TR FB PLS A	TR FB PLS B
22	SYS HOLD	MOTOR ACT	MD READY
23	SV WR	RESETO-L	SV P1D EN
24	MD CS	SV R/W	SV A7
25	SV A6	SV A5	SV A4
26	SV A3	SV A2	SV A1
27	SV A0	SV D7	SV D6
28	SV D5	SV D4	SV D3
29	SV D2	SV D1	SV D0
30	-5V	-5V	-5V
31	+5V	+5V	+5V
32	0	0	0

CK738

	A	B
1	DRUM FG 0B	
2	DRUM FG 00	
3	CAPS FG 0B	CAPS FG 0A)
4		CAPS FG 0B
5	DRUM FG 0B	
6	DRUM FG 00	DRUM FG 0B
7	0	0
8	0	0
9	AUX 1	DM CONT
10	AUX 2	
11	0	0
12	0	0
13	MFW CTLO 0B	ENV REC
14	MFW CTLO 00	
15	CUE METER 0B	TC LOUT 0B
16	CUE METER 00	TC LOUT 00
17	CUE MOUT 0B	CUE LOUT 0B
18	CUE MOUT 00	CUE LOUT 00
19	0	0
20	0	0
21	REC CTL 0B	AUX 3
22	REC CTL 00	AUX 4
23		CUE IN 0B
24		CUE IN 00
25	CUE REC 0 0B	CUE PB 0 0B
26	CUE REC 0 00	CUE PB 0 00
27	0	0
28	0	0
29	TR FB PLS B	TR FB PLS A
30	SV DT 3	SV DT 4
31	SV DT 1	SV DT 2
32		DT-VN-3
33	DT-VN-2	DT-VN-1
34	DT-VN-0	DRUM DIR
35	TC 0EN	CTL PB
36		TC RD
37	MOTOR STOP	SYSCON FR
38	MD EN	PB PULSE
39	DT EN	DD EN
40	AE EN	RF EN
41	AE CS0	SE EN
42	AE CS1	WY EN
43	SYS RD	AE/SV SPR
44	SYS WR	SYS R/W
45	SYS DATA2	SYS DATA0
46	SYS DATA3	SYS DATA1
47	SYS DATA4	SYS DATA4
48	SYS DATA7	SYS DATA5
49	SYS ADRS2	SYS ADRS0
50	SYS ADRS3	SYS ADRS1

CK739

	A	B
1	SV A13	SV A14
2	SV A10	SV A12
3	SV A9	SV A11
4	SV A6	SV A8
5	SV A5	SV A7
6	SV A2	SV A4
7	SV A1	SV A3
8	SV D6	SV A0
9	SV D5	SV D7
10	SV D2	SV D4
11	SV D1	SV D3
12	SV RD	SV D0
13	SV R/W	SV WR
14	MY1 CS	SE CS
15	MY0 CS	MD CS
16	SYS WY CS	SE READY
17	MOV ST	MD READY
18	RTC ALARM	MOV RC
19	1HZ INT	MY DT EN
20	SYS READY	
21	MOTOR ACT	SYS HOLD
22	SV P1D EN	
23	DT ALARM	DT DM
24	0	0
25	0	0
26	RF ADRS5	RF ADRS7
27	RF ADRS4	RF ADRS6
28	RF ADRS1	RF ADRS3
29	RF ADRS0	RF ADRS2
30	RF DATA5	RF DATA7
31	RF DATA4	RF DATA6
32	RF DATA1	RF DATA3
33	RF DATA0	RF DATA2
34	RF R/W	RF WR
35	RF DUAL	RF RD
36	BUSY 1	RF SV CS
37	1F ERR RF	RESETO-L
38	0	0
39	0	0
40	RF ADRS11	AV REF
41		0
42		RF ADRS8
43	FAN D	FAN C
44	FAN B	FAN A
45	RF ADRS9	RF ADRS10
46	ENV STUNT B	ENV STUNT D
47	ENV STUNT A	ENV STUNT C
48	0	0
49	ENV CONF I B	ENV CONF I D
50	ENV CONF I A	ENV CONF I C

CK721
(TO PD-4R)

	A	B
1	+14V	0
2		

MY-46

CK713

	B	A
40	0	0
39	MY EN	
38		
37		
36		
35		
34	1HZ INT	RTC ALARM
33		
32	MOV RC	MOV ST
31		
30	MY0 CS	MY1 CS
29	MY DT EN	SV R/W
28	SV WR	SV RD
27	SV D0	SV D1
26	SV D2	SV D3
25	SV D4	SV D5
24	SV D6	SV D7
23	SV A0	SV A1
22	SV A2	SV A3
21	SV A4	SV A5
20	SV A6	SV A7
19	SV A8	SV A9
18	SV A10	SV A11
17	SV A12	SV A13
16	SV A14	
15	AUX 1	AUX 2
14	AUX 3	AUX 4
13		
12	SYS WY CS	SYS R/W
11	SYS WR	SYS RD
10	SYS DATA0	SYS DATA1
9	SYS DATA2	SYS DATA3
8	SYS DATA4	SYS DATA5
7	SYS DATA6	SYS DATA7
6	SYS ADRS0	SYS ADRS1
5	SYS ADRS2	SYS ADRS3
4		
3		
2		
1	+5V	+5V

MB-286

CK714

	A	B
1	0	0
2	+14V	+14V
3	+14V	0
4	+40V	+40V
5	0	0
6	+12V	+12V
7	-12V	-12V
8	-12V SENSE	+12V SENSE
9		
10	+40V 0ED	0
11	0	+5V
12	+5V	0
13	-5V	-5V
14	0	+12V 0ED
15	0	-12V 0ED

CK724
(TO CN-501)

	A	B
1	CP PINCH IH	CP PINCH 0B
2		CP PINCH 0J

MB-285 BOARD (1/3) SIGNAL TABLE

BOARD NO.1-639-151-11

DVR-2000 LA :#100001-
DVR-2000 EO :#100001-
DVR-2100 LA :#100001-
DVR-2100 MO :#100001-
DVR-2100 EO :#100001-

MOTHER BOARD MB-285(2/3) MB-285(2/3) MOTHER BOARD

MB-285 BOARD (2/3)
Mother Board

FOR DVR-2100

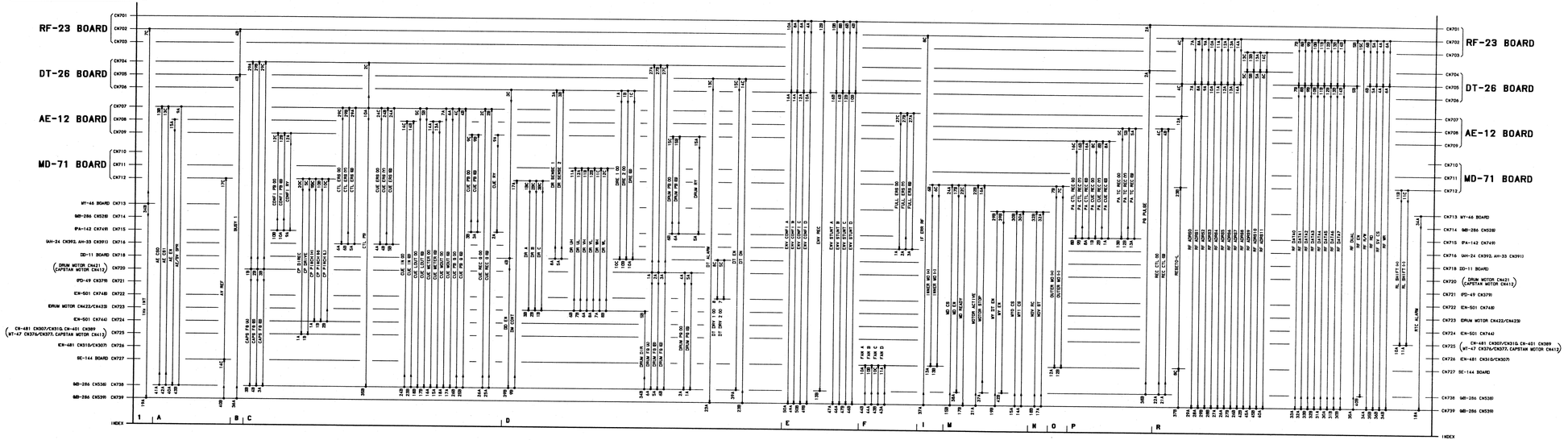

MB-285 BOARD **(2/3)**
WIRING DIAGRAM
BOARD NO. 1-639-151-11

DVR-2100 UJ : #10001-
DVR-2100 UCI : #10001-
DVR-2100 EK3 : #10001-

19-139

MOTHER BOARD MB-285 (2/3) MB-285 (2/3) MOTHER BOARD

MB-285 BOARD (2/3)
Mother Board

FOR DVR-2000

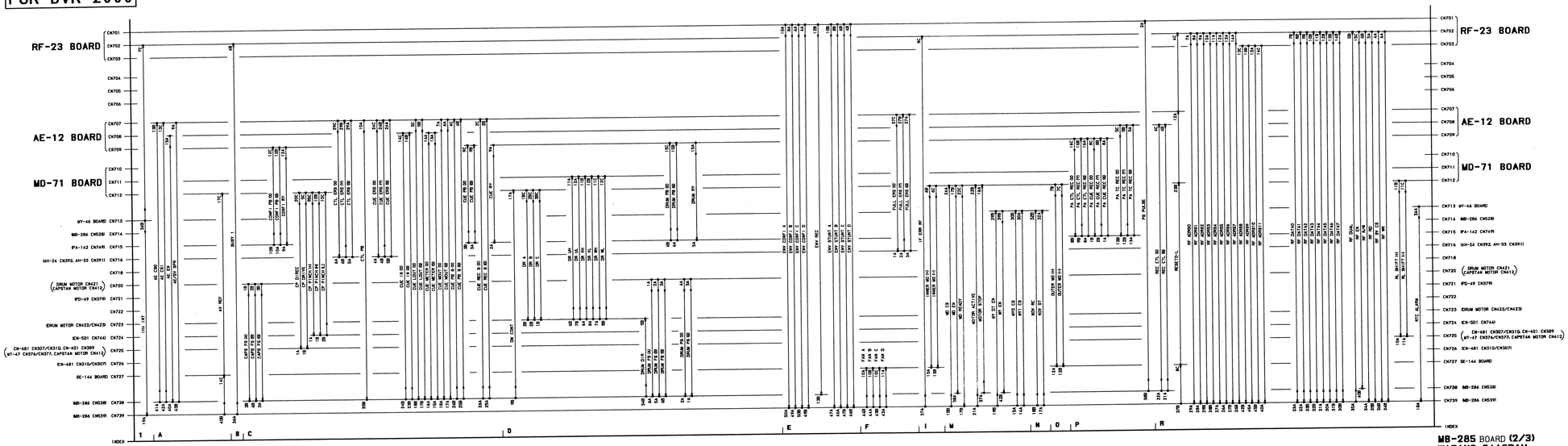

MB-285 BOARD **(2/3)**
WIRING DIAGRAM
BOARD NO. 1-639-151-11
DVR-2000 LJ : #10001-
DVR-2000 EJ : #10001-
DVR-2000 BJ : #10001-

MB-285(3/3) MOTHER BOARD
MOTHER BOARD **MB-285(3/3)**

MB-285 BOARD (3/3)
Mother Board

FOR DVR-2100

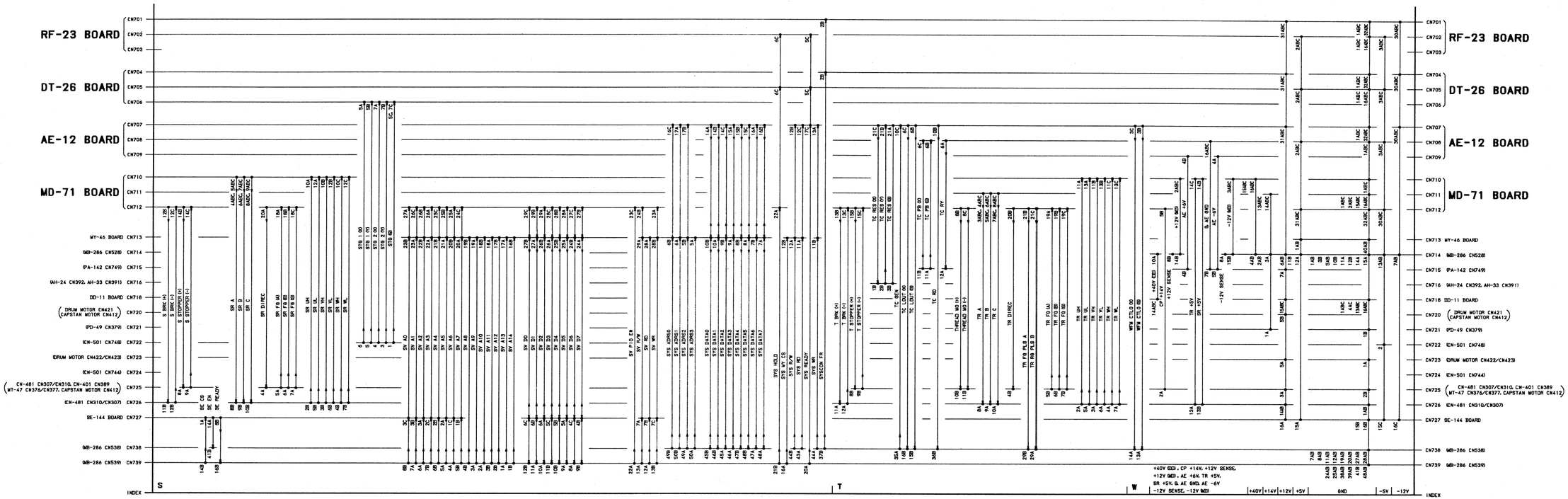

MB-285 BOARD **(3/3)**
WIRING DIAGRAM
BOARD NO. 1-639-151-11
DVR-2100 LB :#10001-
DVR-2100 EC :#10001-
DVR-2100 EX :#10001-

19-141

MOTHER BOARD MB-285 (3/3) MB-285 (3/3) MOTHER BOARD

MB-285 BOARD (3/3)

Mother Board

FOR DVR-2000

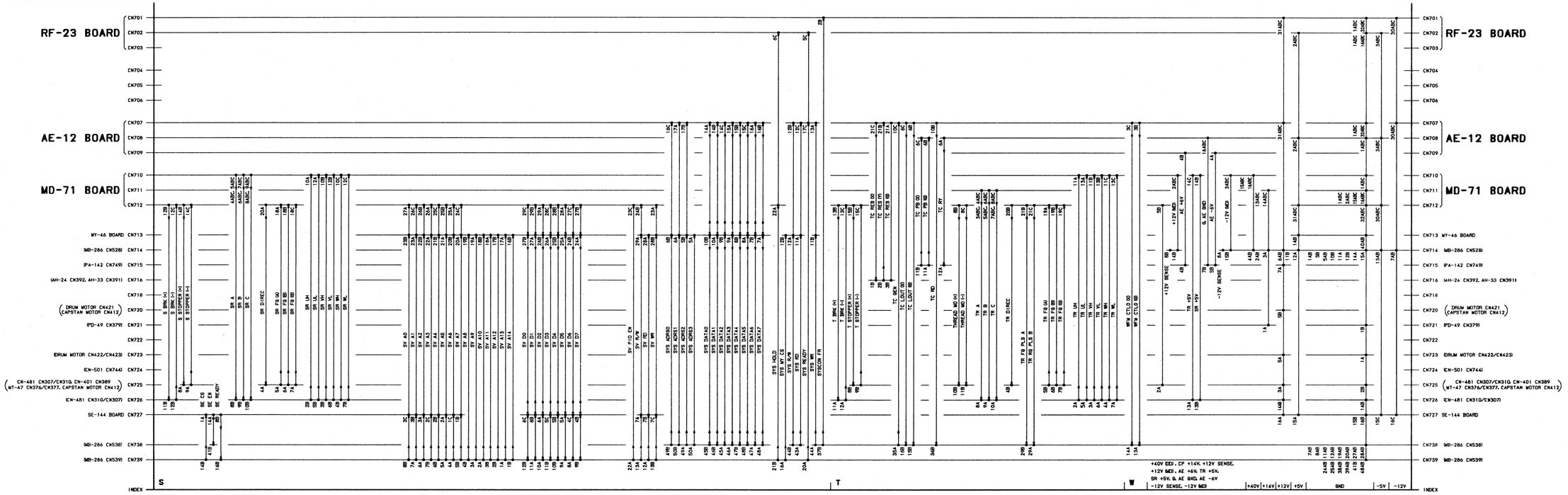

MB-285 BOARD **(3/3)**
WIRING DIAGRAM
BOARD NO. 1-639-151-11
DVR-2000 UJ :#10001-
DVR-2000 (UC) :#10001-
DVR-2000 (EX) :#10001-

19-142

MB-286 BOARD (1/5)
Mother Board

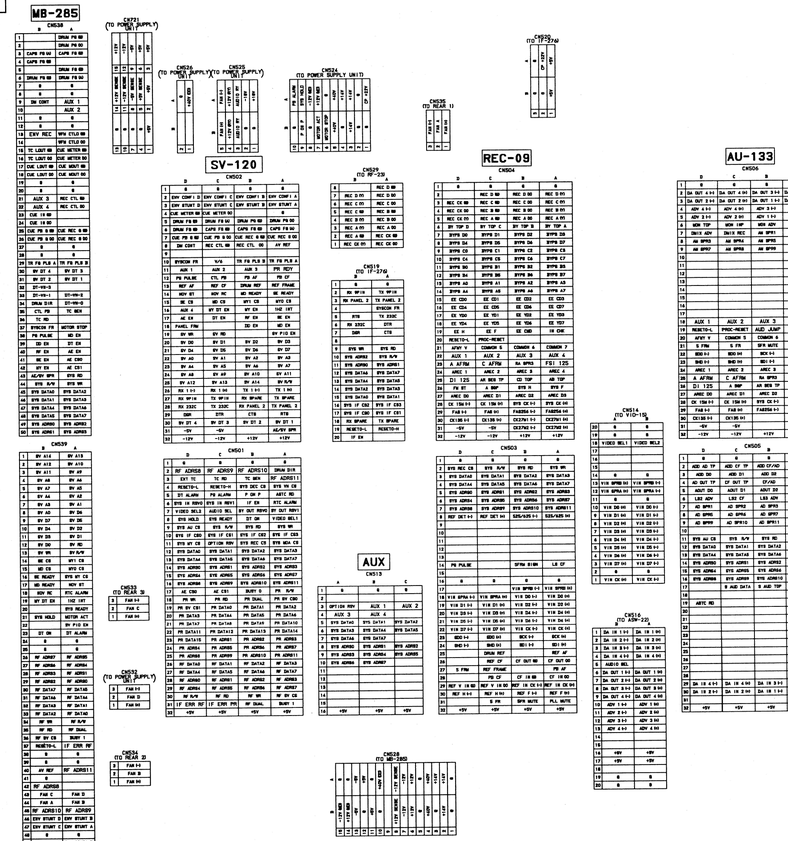

MOTHER BOARD MB-286 (1/5) MB-286 (1/5) MOTHER BOARD

MB-286 BOARD (1/5)
SIGNAL TABLE
BOARD NO.1-639-152-11

DVR-2000 UJ (#10001-
DVR-2000 UJC (#10001-
DVR-2000 EJC (#10001-
DVR-2100 UJ (#10001-
DVR-2100 UJC (#10001-
DVR-2100 EJC (#10001-

19-143

MOTHER BOARD MB-286 (2/5) MB-286 (2/5) MOTHER BOARD

MB-286 BOARD (2/5)

Mother Board

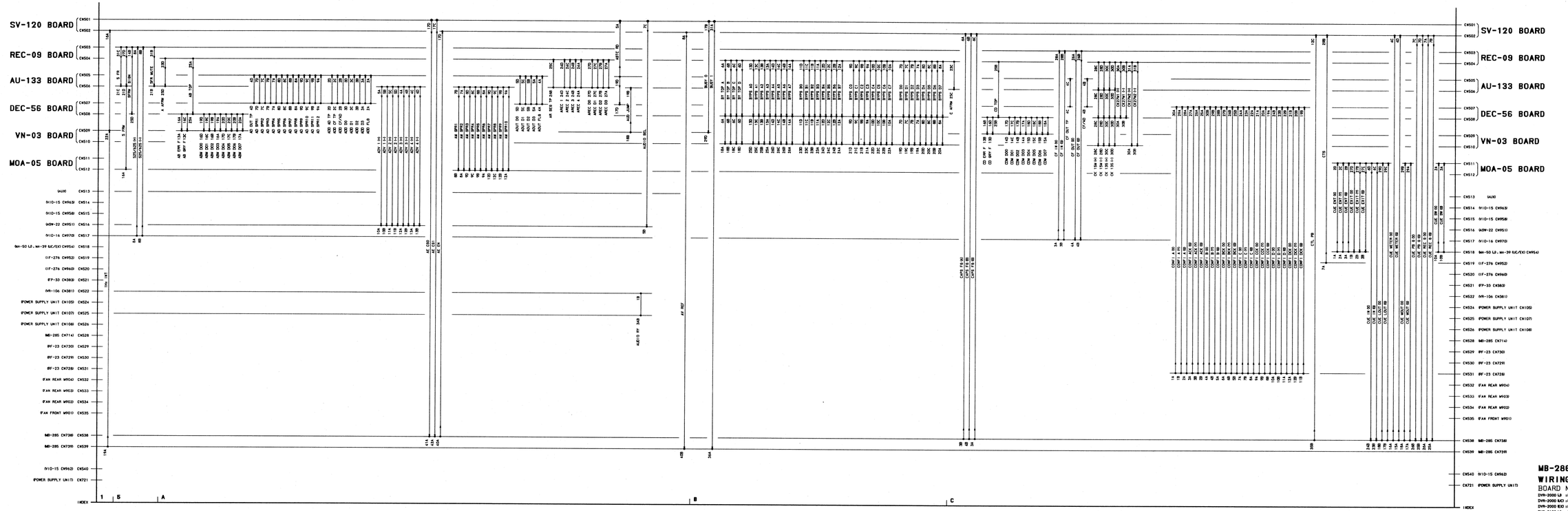

MB-286 BOARD **(2/5)**
WIRING DIAGRAM
BOARD NO. 1-639-152-11

DVR-2000 LB (#10001-
DVR-2000 MC) (#10001-
DVR-2000 EX) (#10001-
DVR-2100 LB (#10001-
DVR-2100 MC) (#10001-
DVR-2100 EX) (#10001-

19-144

MOTHER BOARD MB-286 (4/5) MB-286 (4/5) MOTHER BOARD

MB-286 BOARD (4/5)
Mother Board

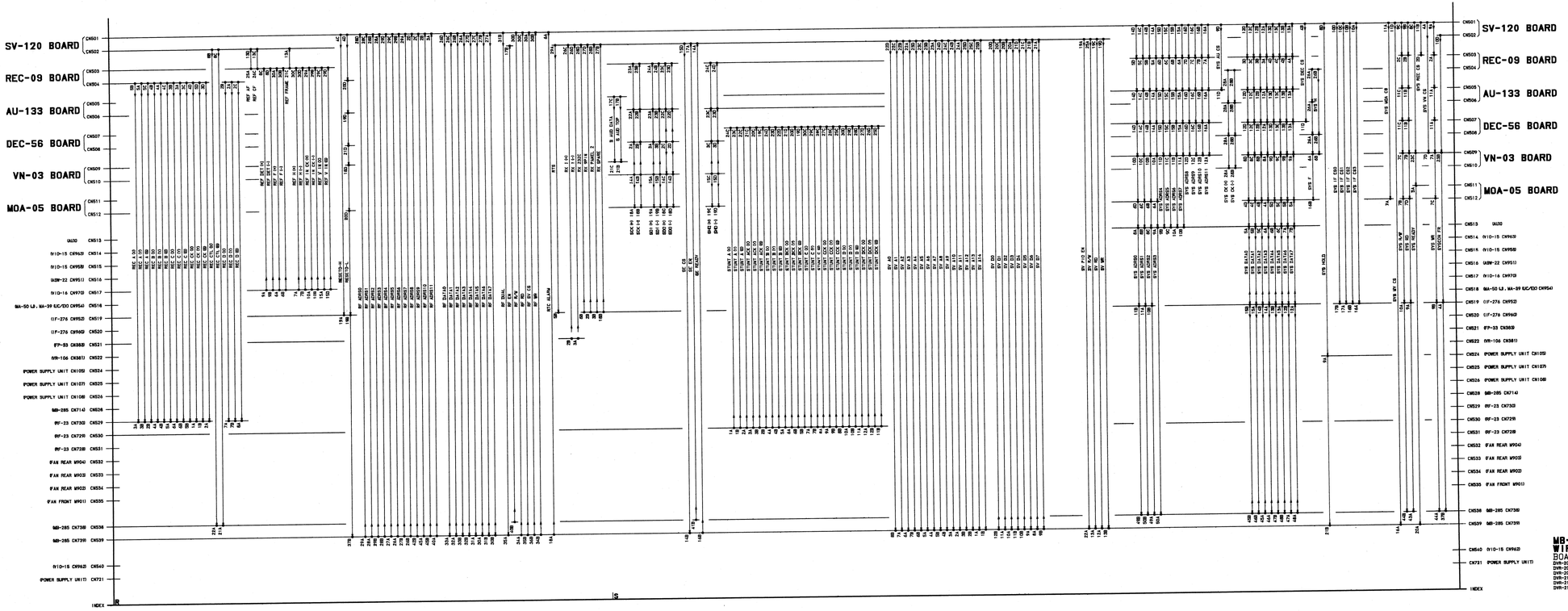

MB-286 BOARD (4/5)
WIRING DIAGRAM
BOARD NO. 1-639-152-11
DVR-2000 LJ #810001~
DVR-2000 EJ #810001~
DVR-2000 EO #810001~
DVR-2100 LJ #810001~
DVR-2100 EJ #810001~
DVR-2100 EO #810001~

19-146

MOTHER BOARD **MB-286 (5/5)**

MB-286 BOARD (5/5)

Mother Board

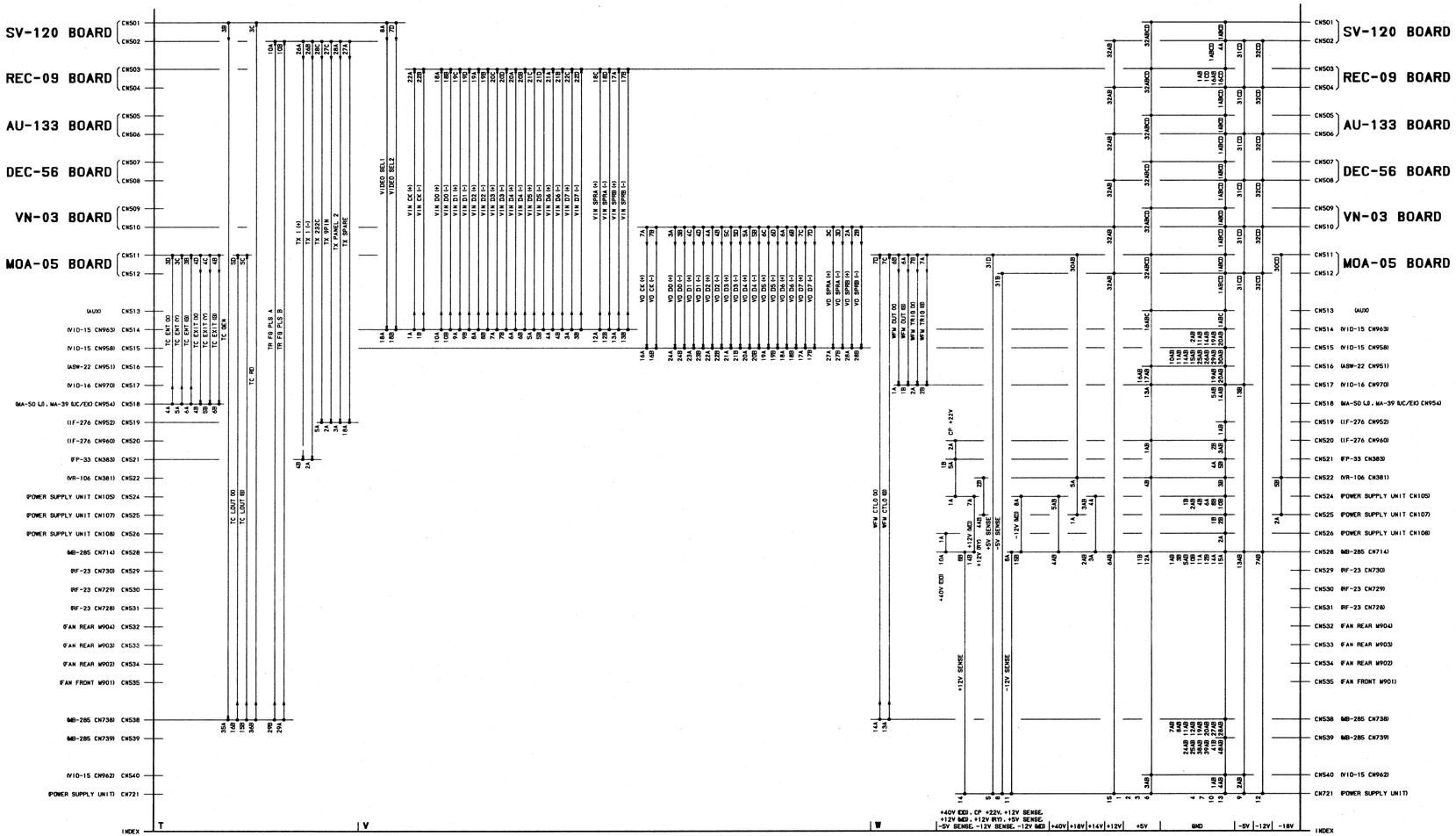

MB-286 BOARD **(5/5)**
WIRING DIAGRAM
BOARD NO. 1-639-152-11

DVR-2000 LB :810001-
DVR-2000 EJC :810001-
DVR-2000 EJD :810001-
DVR-2100 LB :810001-
DVR-2100 EJC :810001-
DVR-2100 EJD :810001-

19-147

MOTHER BOARD **FRAME WIRING (1/6)** **FRAME WIRING (1/6)** MOTHER BOARD

FRAME WIRING (1/6)

Mother Board

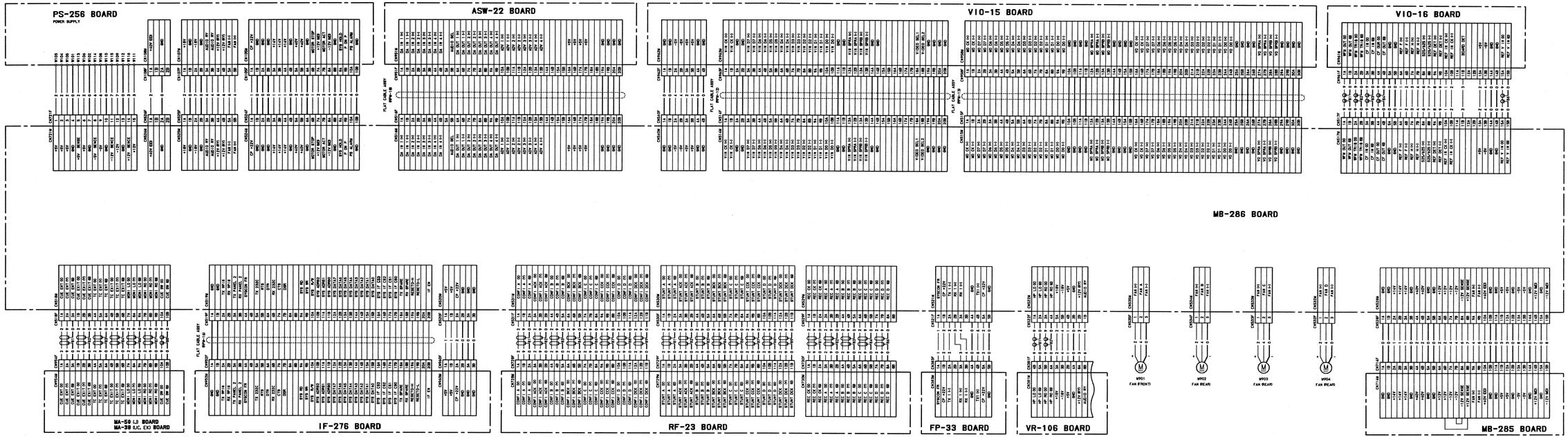

FRAME WIRING (1/6)

MOTHER BOARD

DVR-2000 LJ3 : #10001- DVR-2100 LJ3 : #10001-
DVR-2000 EJC3 : #10001- DVR-2100 EJC3 : #10001-
DVR-2000 EKI : #10001- DVR-2100 EKI : #10001-

19-149

AH-24, AH-33, CN-501 MOTHER BOARD **FRAME WIRING (2/6)** **FRAME WIRING (2/6)** MOTHER BOARD AH-24, AH-33, CN-501

FRAME WIRING (2/6)

MOTHER BOARD
AH-24 BOARD
AH-33 BOARD
CN-501 BOARD

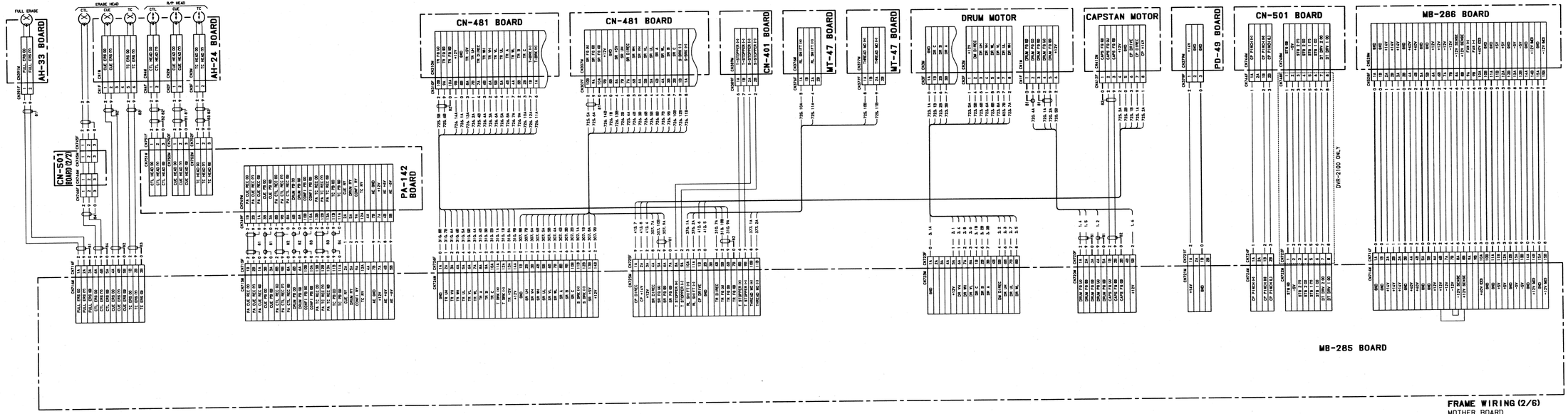

FRAME WIRING (2/6)
MOTHER BOARD
DVR-2000 AJ ±810001~ DVR-2100 AJ ±810001~
DVR-2000 AJC ±810001~ DVR-2100 AJC ±810001~
DVR-2000 EIO ±810001~ DVR-2100 EIO ±810001~

19-150

CN-401, CN-481, CN-501, MT-47, PC-42 TAPE TRANSPORT **FRAME WIRING (3/6)** **FRAME WIRING (3/6)** TAPE TRANSPORT CN-401, CN-481, CN-501, MT-47, PC-42

FRAME WIRING (3/6)

TAPE TRANSPORT CN-501 BOARD
CN-401 BOARD MT-47 BOARD
CN-481 BOARD PC-42 BOARD

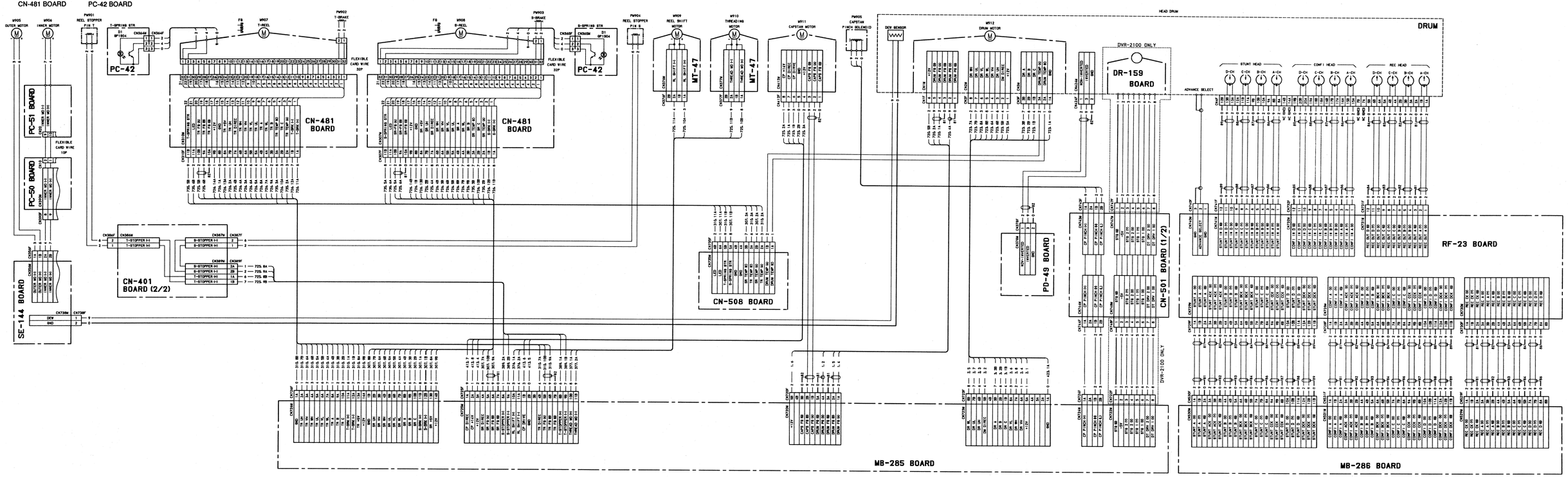

FRAME WIRING (3/6)
TAPE TRANSPORT
DVR-2000 LJ :#10001~ DVR-2100 LJ :#10001~
DVR-2000 KJ :#10001~ DVR-2100 KJ :#10001~
DVR-2000 EX0 :#10001~ DVR-2100 EX0 :#10001~

19-151

FRAME WIRING (4/6) SENSOR CN-401, CN-581, DE-34, DE-38, LE-62, LE-77, PC-42, PC-50, PC-51, PC-52, PC-53, PC-54, PC-55, PC-60, PC-64, TR-43
CN-401, CN-581, DE-34, DE-38, LE-62, LE-77, PC-42, PC-50, PC-51, PC-52, PC-53, PC-54, PC-55, PC-60, PC-64, TR-43 SENSOR FRAME WIRING (4/6)
FRAME WIRING (4/6) SENSOR CN-401, CN-581, DE-34, DE-38, LE-62, LE-77, PC-42, PC-50, PC-51, PC-52, PC-53, PC-54, PC-55, PC-60, PC-64, TR-43

FRAME WIRING (4/6)

SENSOR
- CN-401 BOARD
- CN-581 BOARD
- DE-34 BOARD
- DE-38 BOARD
- LE-62 BOARD
- LE-77 BOARD
- PC-42 BOARD
- PC-50 BOARD
- PC-51 BOARD
- PC-52 BOARD
- PC-53 BOARD
- PC-54 BOARD
- PC-55 BOARD
- PC-60 BOARD
- PC-64 BOARD
- TR-43 BOARD

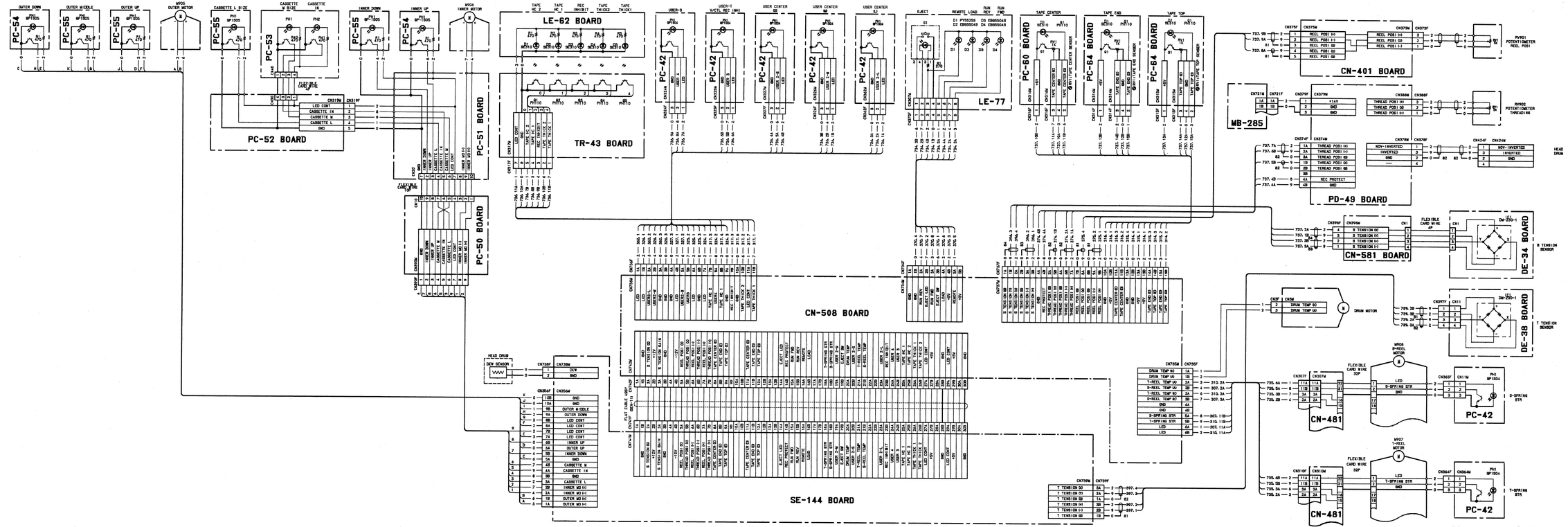

19-152

ASW-21 REAR PANEL **FRAME WIRING (5/6)** **FRAME WIRING (5/6)** REAR PANEL ASW-21

FRAME WIRING (5/6)
REAR PANEL
ASW-21 BOARD

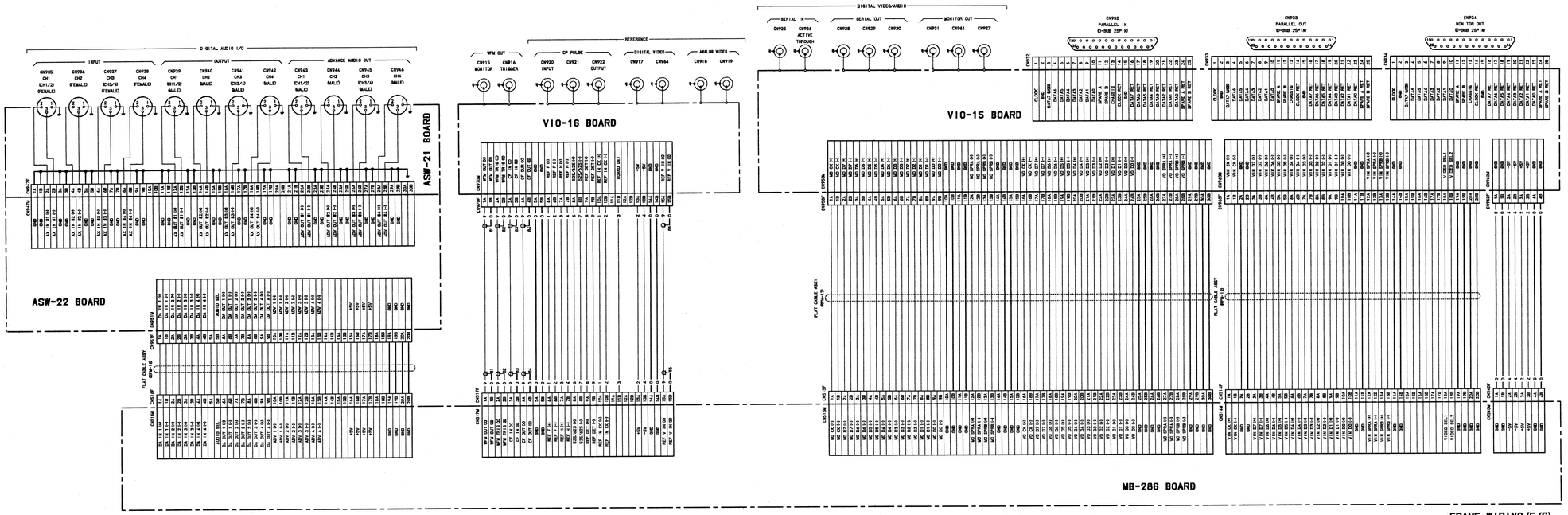

FRAME WIRING (5/6)
REAR PANEL
DVR-2000 LJ ±810001~ DVR-2100 LJ ±810001~
DVR-2000 UJ ±810001~ DVR-2100 UJ ±810001~
DVR-2000 EX ±810001~ DVR-2100 EX ±810001~

19-153

FRAME WIRING (6/6) REAR PANEL CN-512, FP-33, MA-39, MA-50, PE-18, VR-106, VR-107

CN-512, FP-33, MA-39, MA-50, PE-18, VR-106, VR-107 REAR PANEL **FRAME WIRING (6/6)**

FRAME WIRING (6/6) REAR PANEL CN-512, FP-33, MA-39, MA-50, PE-18, VR-106, VR-107

FRAME WIRING (6/6)

REAR PANEL
CN-512 BOARD
FP-33 BOARD
MA-39 BOARD
MA-50 BOARD
PE-18 BOARD
VR-106 BOARD
VR-107 BOARD

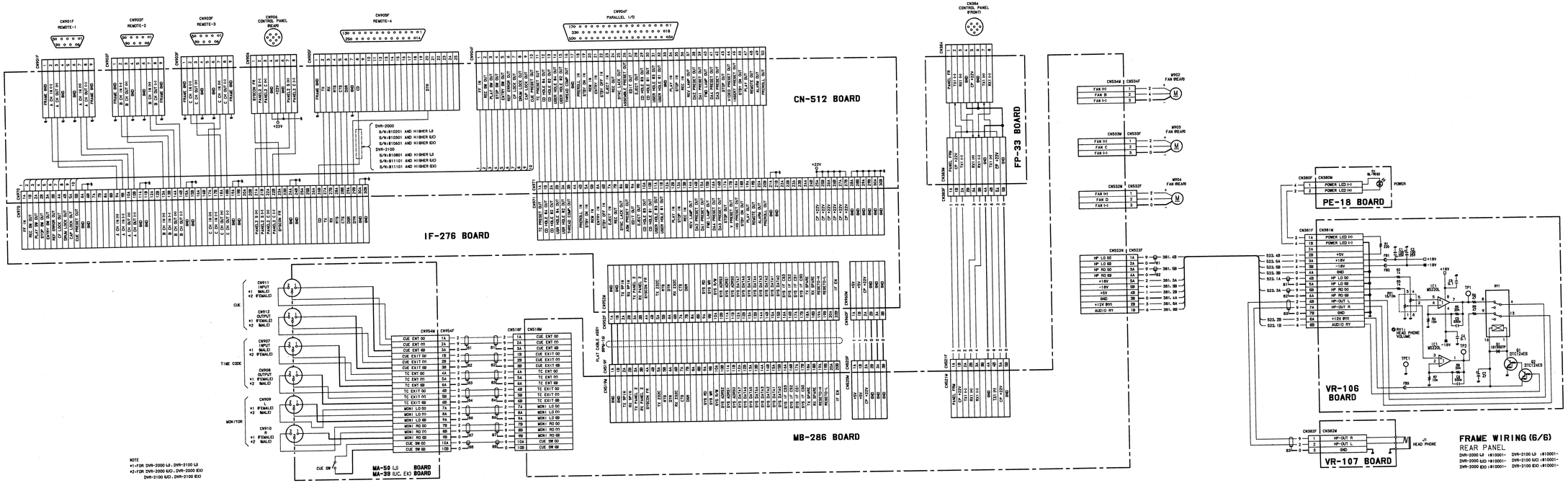

FRAME WIRING (6/6)
REAR PANEL
DVR-2000 LJ :810001- DVR-2100 LJ :810001-
DVR-2000 EJ/CJ :810001- DVR-2100 EJ/CJ :810001-
DVR-2000 EX/ :810001- DVR-2100 EX/ :810001-

19-154

CP-156 FUNCTION CONTROL PANEL (1/3) FUNCTION CONTROL PANEL (1/3) CP-156

FUNCTION CONTROL PANEL (1/3)

CP-156 BOARD

NOTE: DVR-3000/2100

ADDRESS	MARK	CHANGED INFORMATION	SERIAL No.
C3	+1	C3 CHANGED 22/16V → 100/16V	DVR-2000 J :810201- UC:810301- EX:810401- DVR-2100 J :810601- UC:810901- EX:810901-
I3	+2	IC14 CHANGED DS1230Y → BR4011WA-100	DVR-2000 J :810201- UC:810401- EX:810601- DVR-2100 J :810601- UC:811101- EX:811101-
D1 P1	+3	IC7, IC8 CHANGED HM514402ZP-10 → HM514402ZP-8	DVR-2000 J :810401- UC:810901- EX:811201- DVR-2100 J :811101- UC:811201- EX:811201-

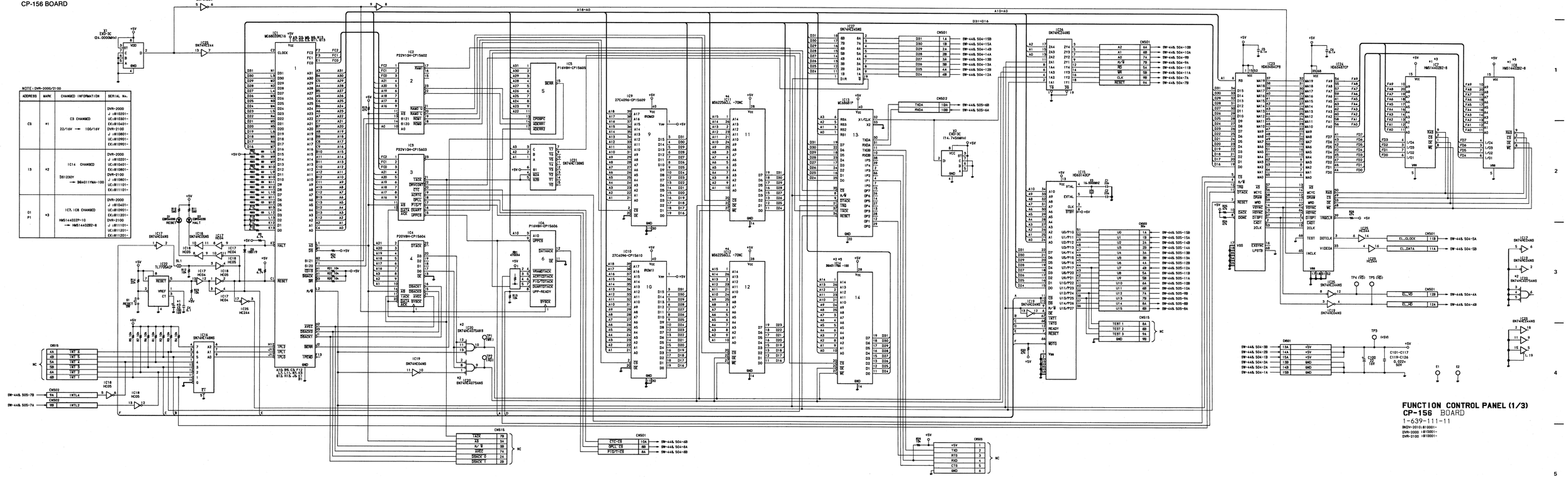

DVR-2100 ONLY

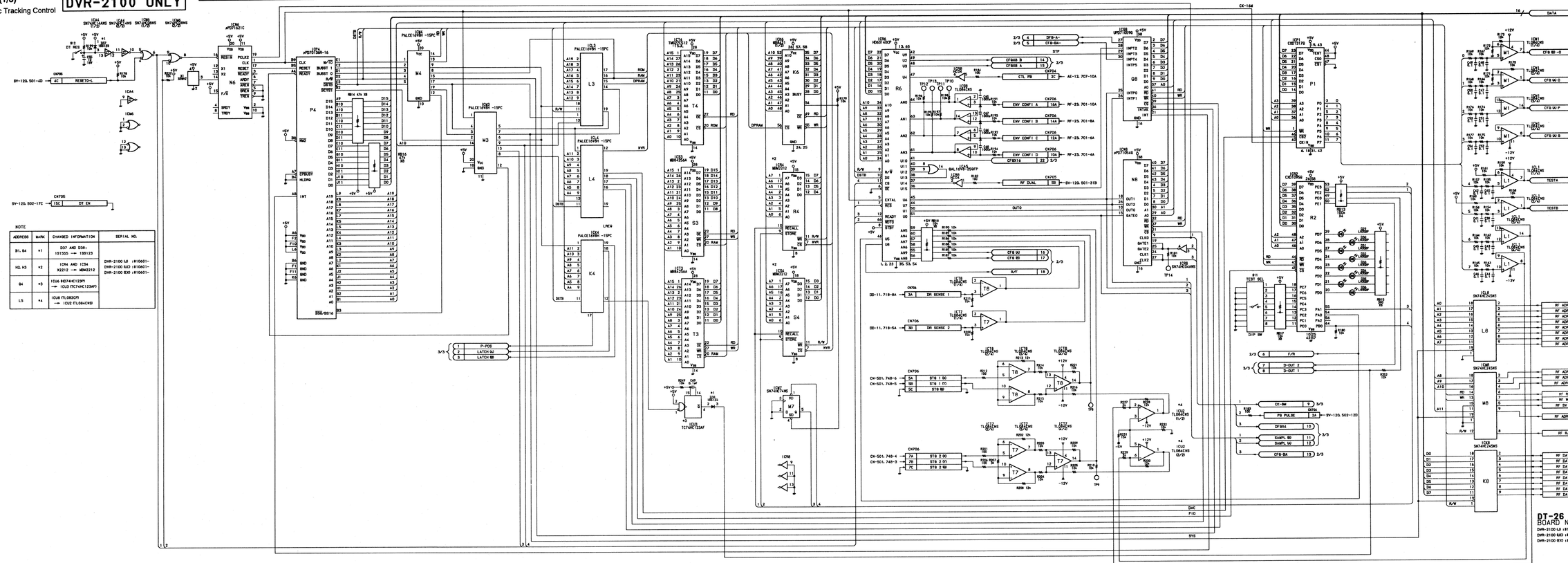

DT-26 BOARD (2/3)

Dynamic Tracking Control

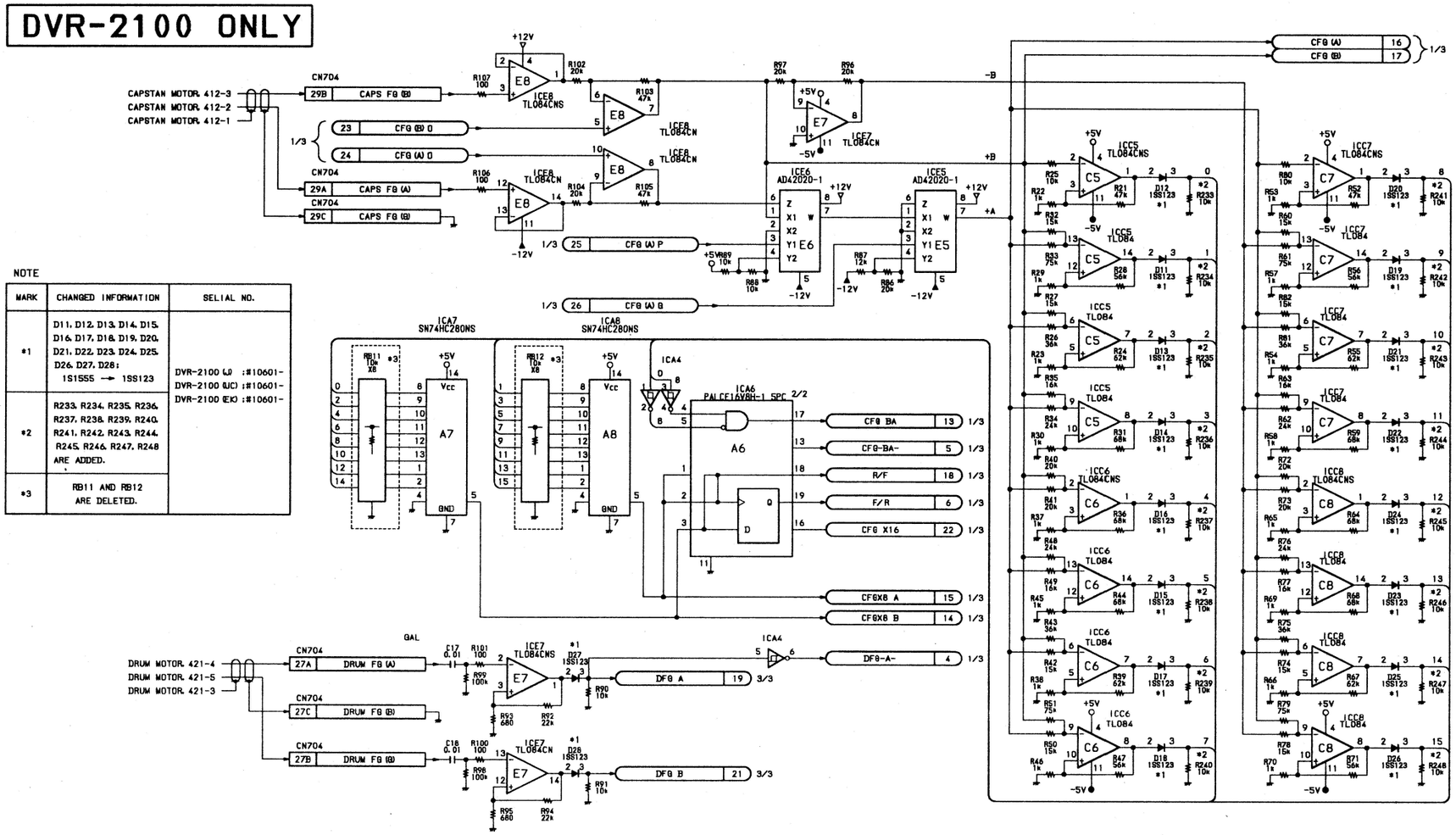

NOTE

MARK	CHANGED INFORMATION	SELIAL NO.
*1	D11, D12, D13, D14, D15, D16, D17, D18, D19, D20, D21, D22, D23, D24, D25, D26, D27, D28: 1S1555 → 1SS123	DVR-2100 (J) :#10601- DVR-2100 (UC) :#10601- DVR-2100 (EK) :#10601-
*2	R233, R234, R235, R236, R237, R238, R239, R240, R241, R242, R243, R244, R245, R246, R247, R248 ARE ADDED.	
*3	RB11 AND RB12 ARE DELETED.	

DT-26 BOARD **(2/3)**
BOARD NO. 1-639-124-11, -12
DVR-2100 (J) :#10001-
DVR-2100 (UC) :#10001-
DVR-2100 (EK) :#10001-

19-159

A B C D E F G H

DT-26 BOARD (3/3)

Dynamic Tracking Control

DVR-2100 ONLY

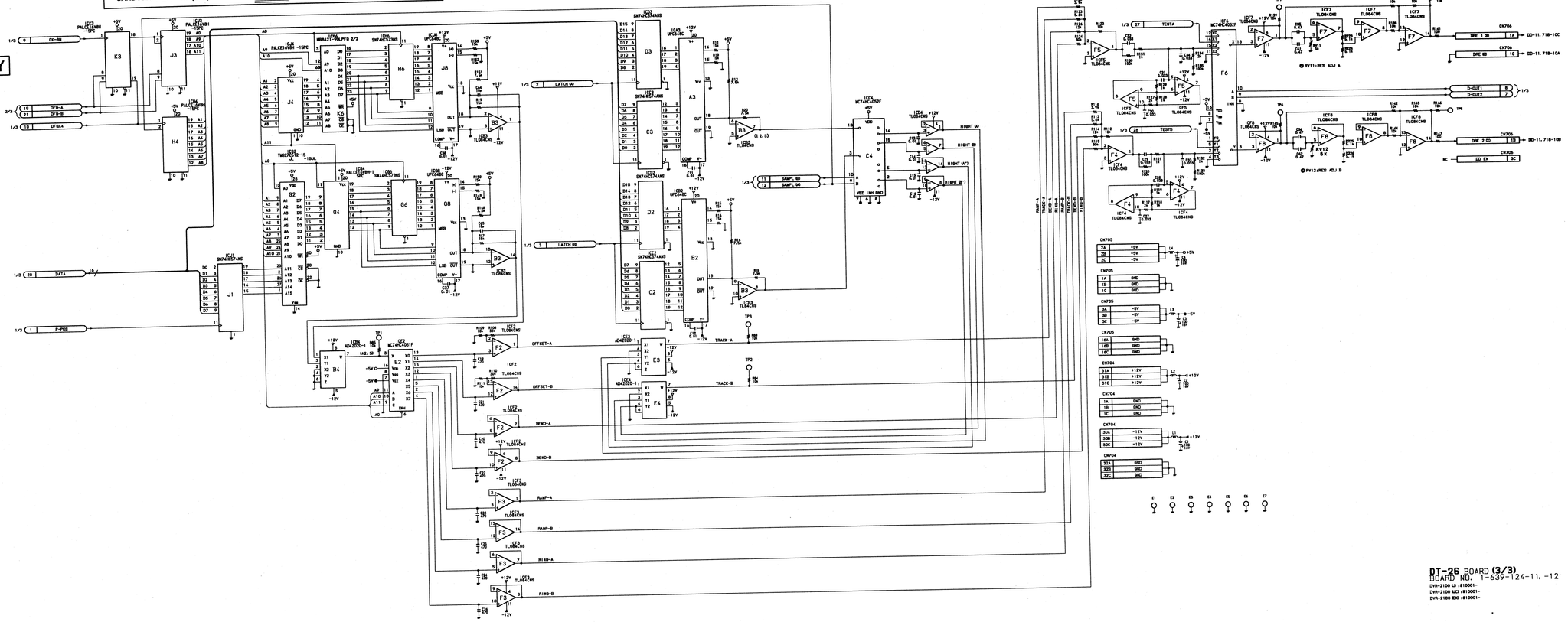

DT-26 BOARD (3/3)
BOARD NO. 1-639-124-11, -12

DVR-2100 LJ (810001-
DVR-2100 MJ (810001-
DVR-2100 BJ (810001-

DD-11 BOARD

DT Driver

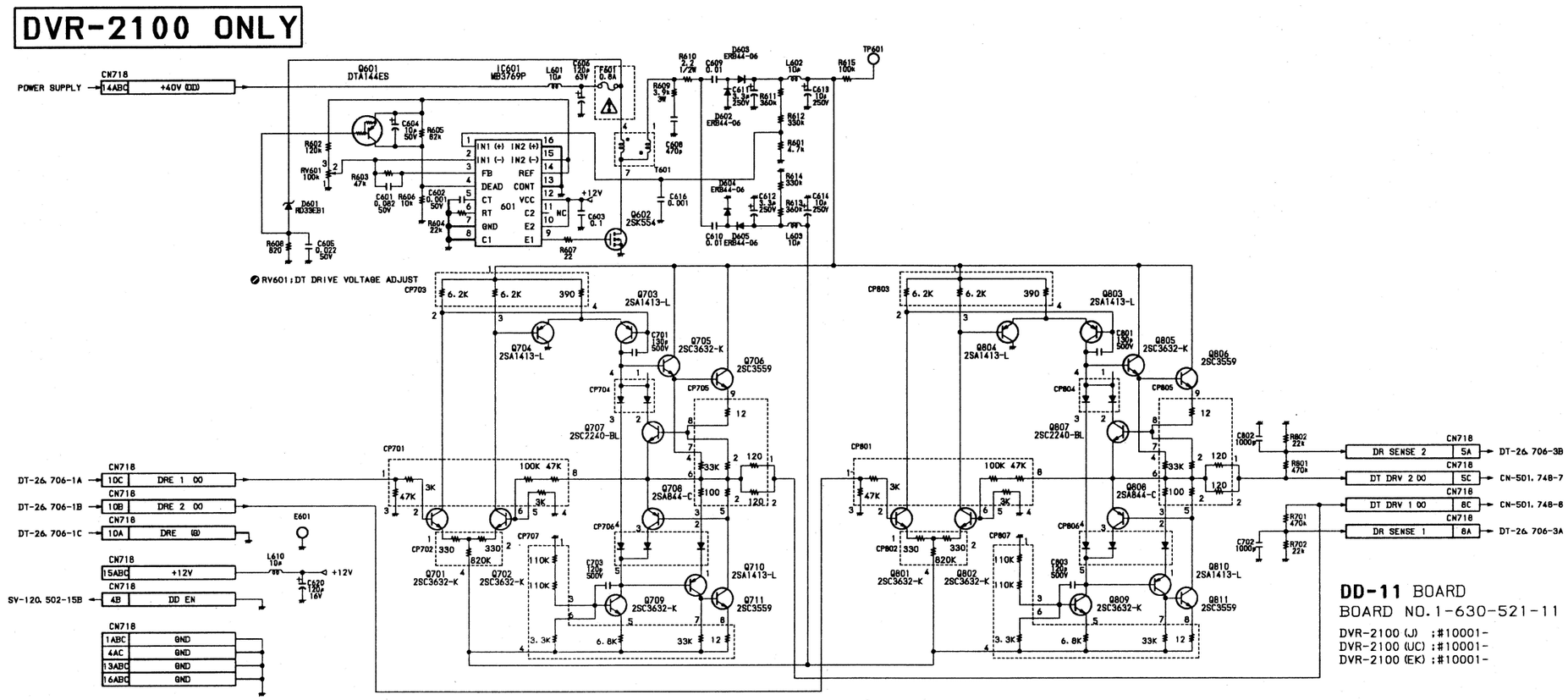

SECTION 20
BOARD LAYOUT

	Board Name	Function	Page
A	AE-12 Board :	Longitudinal Processor	20-14
	AH-24 Board :	Longitudinal R/P Head	20-36
	AH-33 Board :	Full Erase Head	20-36
	ASW-21 Board :	Digital Audio I/O Connector	20-36
	ASW-22 Board :	Digital Audio I/O Selector	20-27
	AU-133 Board :	Audio Signal Processor	20-12
C	CN-401 Board :	Reel Position Sensor Relaying	20-37
	CN-481 Board :	Reel Motor Relaying	20-37
	CN-501 Board :	Drum CTL Relaying	20-37
	CN-508 Board :	SE-144 Board Relaying	20-21
	CN-512 Board :	50P I/O, RS-232C, RS-422	20-37
	CN-581 Board :	S-Tension Sensor Relaying	20-37
	CP-156 Board :	Control Panel CPU	20-43
	CT-133 Board :	Regulator Controller	20-29
D	DD-11 Board :	DT Driver (DVR-2100 ONLY)	20-46
	DE-34 Board :	S-Tension Sensor (DME)	20-37
	DE-38 Board :	T-Tension Sensor (DME)	20-37
	DEC-56 Board :	PB Signal Processor	20-8
	DET-11 Board :	Rotary Encoder	20-40
	DRUM Board :	LED/PRT/P.R.T. TRANSLATION	20-3
	DR-142 Board :	DRIVE AMP FOR STRAIN GAUGE	20-3
	DR-172 Board :	RT STATOR ASSY	20-3
	DT-26 Board :	Dynamic Tracking Control (DVR-2100 ONLY)	20-44
F	FP-33 Board :	Control Panel Cable Connector	20-37
	FU-53 Board :	Fuse Board	20-29
I	IF-276 Board :	System Control I/O	20-26
L	LE-62 Board :	Sensor, TAPE THICK/HC/REC INHIBIT	20-38
	LE-77 Board :	LED Indicator (Front Panel)	20-38
	LE-78 Board :	LED Indicator (Function Control Panel)	20-40
M	MA-39 Board :	CUE/TC/MONITOR I/O Connector	20-38
	MA-50 Board :	CUE/TC/MONITOR I/O Connector	20-38
	MB-285 Board :	TTP Mother	20-32
	MB-286 Board :	Processor Mother	20-34
	MD-71 Board :	Motor Driver	20-22
	MOA-05 Board :	Audio/Monitor Amp	20-16
	MT-47 Board :	Motor Relaying (Reel Shift/Threading)	20-38
	MY-46 Board :	NOV-RAM/Timer	20-24
P	PA-142 Board :	CUE/TC/CTL Head Amp	20-38
	PC-42 Board :	Sensor, T,S-Spring STR/USER Hole	20-38
	PC-50 Board :	Inner Motor/Cassette Sensor Relaying	20-38
	PC-51 Board :	Inner Motor/Cassette Sensor Relaying	20-38
	PC-52 Board :	Inner Motor/Cassette Sensor Relaying	20-39
	PC-53 Board :	Sensor, Cassette In/M Size	20-39
	PC-54 Board :	Sensor, Inner Up/Outer Down	20-39
	PC-55 Board :	Sensor, Cassette Compartment	20-39
	PC-60 Board :	Sensor, Tape Center	20-39
	PC-64 Board :	Sensor, Tape Top/End	20-39
	PD-49 Board :	Power Rotary Transformer Driver	20-28
	PE-18 Board :	Power LED	20-39
	PS-219 Board :	Control Panel Power Supply	20-40
	PS-256 Board :	Power Supply	20-30
R	RE-52 Board :	Switching Regurator	20-29
	REC-09 Board :	REC Signal Processor	20-6
	RF-23 Board :	RF REC/PB Processor	20-4
S	SE-144 Board :	Sensor-1	20-20
	SV-120 Board :	Servo/System Control	20-18
	SW-423 Board :	Rubber Key	20-41
	SW-448 Board :	TTP Function Key	20-42
T	TR-43 Board :	Sensor, TAPE THICK/HC/REC INHIBIT	20-39
	TR-83 Board :	Envelope Select	20-18
V	VIO-15 Board :	Digital Video I/O	20-25
	VIO-16 Board :	Reference Video I/O	20-25
	VN-03 Board :	PB Signal Processor	20-10
	VR-106 Board :	Headphones Monitor Amp	20-39
	VR-107 Board :	Headphones Jack	20-39

20-1

HEAD DRUM DR-142, DR-172, P.R.T, LED, P.R.T. TRANSLATION

DR-142, DR-172, P.R.T, LED, P.R.T. TRANSLATION **HEAD DRUM**

HEAD DRUM DR-142, DR-172, P.R.T, LED, P.R.T. TRANSLATION

DR-142 BOARD (1-639-712-11, 12)

DVR-2100 ONLY

COMPONENT Side

1-636-712-11, 12 COMPONENT SIDE

DR-172 BOARD (1-639-739-11)

COMPONENT Side

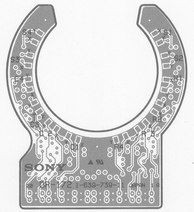

1-639-739-11 COMPONENT SIDE

LED BOARD (1-621-350-12)

COMPONENT Side

1-621-350-12
SOLDER SIDE

P.R.T TRANSLATION BOARD (1-621-459-11)

COMPONENT Side

1-621-459-11
SOLDER SIDE

P.R.T BOARD (1-621-458-14)

COMPONENT Side

1-621-458-14 COMPONENT SIDE

SOLDER Side

1-621-458-14 SOLDER SIDE

RF-23 BOARD (1-639-125-14, 15)

DVR-2000	DVR-2100
J ; S/N 10001 and higher	J ; S/N 10001 and higher
UC ; S/N 10001 and higher	UC ; S/N 10001 and higher
EK ; S/N 10001 and higher	EK ; S/N 10001 and higher

A Side

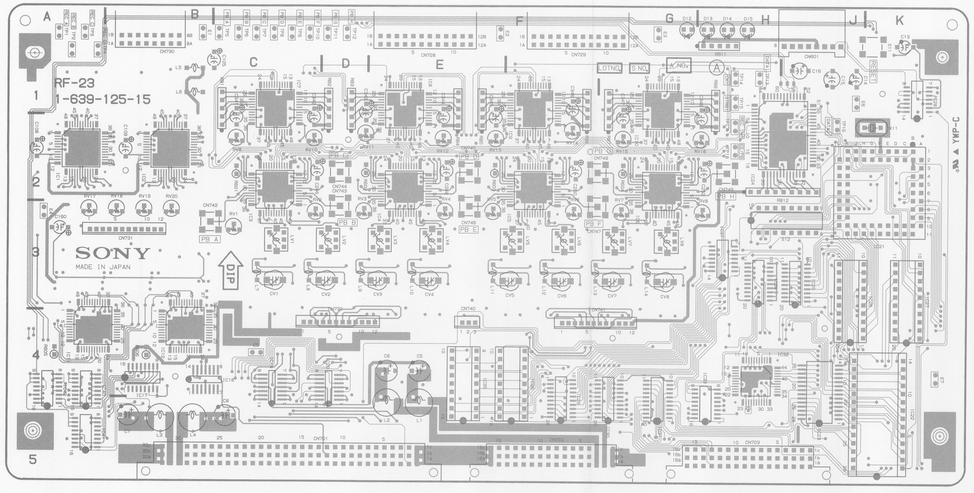

1-639-125-14,15 A SIDE

CARD RACK **RF-23 BOARD** **RF-23 BOARD** CARD RACK

B Side

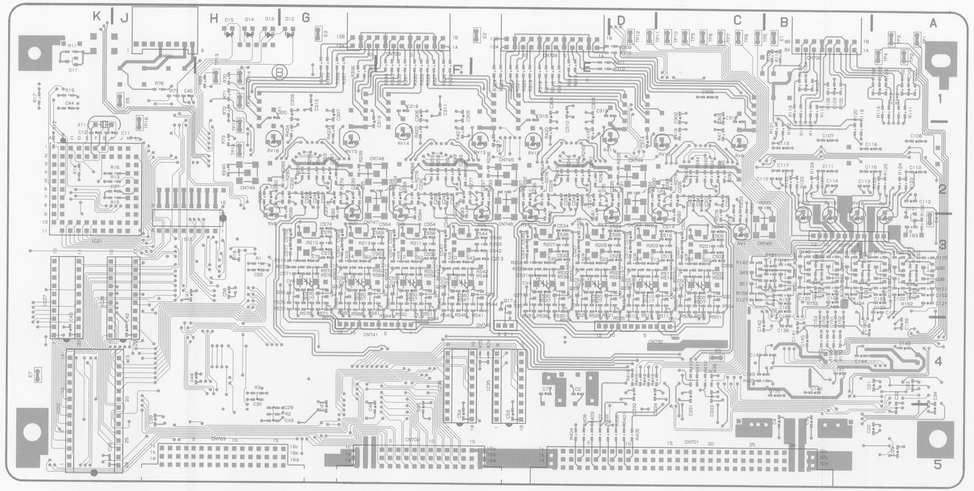

1-639-125-14,15 B SIDE

RF-23 (1-639-125-14, 15)

DVR-2000
DVR-2100

CN601	J1	IC1	A2	Q17	*E3	RV1	C3
CN701	C5	IC2	B2	Q20	*C3	RV2	C3
CN702	F5	IC3	C2	Q21	*C3	RV3	D3
CN703	H5	IC4	E2	Q22	*C3	RV4	E3
CN728	E1	IC5	F2	Q23	*D3	RV5	E3
CN729	F1	IC6	G2	Q24	*D3	RV6	F3
CN730	B1	IC7	C1	Q25	*E3	RV7	G3
CN731	B3	IC8	E1	Q26	*E3	RV8	H3
CN732	D4	IC9	F2	Q27	*E3	RV9	C2
CN740	E4	IC10	G2	Q28	*E3	RV10	C2
CN741	F4	IC11	A4	Q29	*F3	RV11	D2
CN742	B3	IC12	B4	Q30	*F3	RV12	E2
CN743	D3	IC17	B4	Q31	*F3	RV13	E2
CN744	D2	IC18	B4	Q32	*F3	RV14	F2
CN745	E2	IC19	C5	Q33	*G3	RV15	G2
CN746	E3	IC20	D4			RV16	H2
CN747	F3	IC21	K3	Q34	*G3	RV17	A3
CN748	F2	IC22	K5	Q35	*G3		
CN749	H2	IC23	J5	Q36	*A3	RV18	B3
		IC24	H2	Q37	*A3	RV19	B3
CV1	C3	IC25	J3	Q38	*A3	RV20	B3
CV2	D3	IC26	K3	Q39	*A3		
CV3	E3	IC27	K3	Q40	*A3	S11	K1
CV4	E3	IC28	K1	Q41	*B3	S12	J3
CV5	F3	IC29	F5	Q42	*A3		
CV6	F3	IC30	G5	Q43	*B3	TP1	A1
CV7	G3	IC31	G5	Q44	*B3	TP2	A1
CV8	G3	IC32	H4	Q45	*B3	TP3	A1
		IC33	H5	Q46	*B3	TP4	A1
D11	*K1	IC35	E4	Q47	*B3	TP5	C1
D12	G1	IC36	F4	Q48	*B3	TP6	C1
D13	H1	IC37	H3	Q49	*C3	TP7	C1
D14	H1	IC38	H3	Q50	*B3	TP8	C1
D15	H1	IC40	A4	Q51	*C3	TP9	C1
D101	*A2	IC41	A5			TP10	C1
		IC42	A4	RB1	C1	TP11	D1
E1	B1			RB2	D1	TP12	D1
E2	E1	LV1	C3	RB3	D1	TP13	H1
E3	G1	LV2	D3	RB4	E2	TP14	H1
E4	A3	LV3	E3	RB5	E2	TP15	H1
E5	C4	LV4	E3	RB6	F2	TP16	J2
E6	J1	LV5	F3	RB7	G2	TP17	H2
E7	K4	LV6	F3	RB8	H1	TP18	H2
		LV7	G3	RB11	H1		
		LV8	G3	RB12	H2	X11	K2

* : B SIDE

RF-23 BOARD (1-639-125-13)

DVR-2000	DVR-2100
UC ; S/N 10301 through 10599	J ; S/N 10801 through 10899 and higher
EK ; S/N 10601 through 10999	

A Side

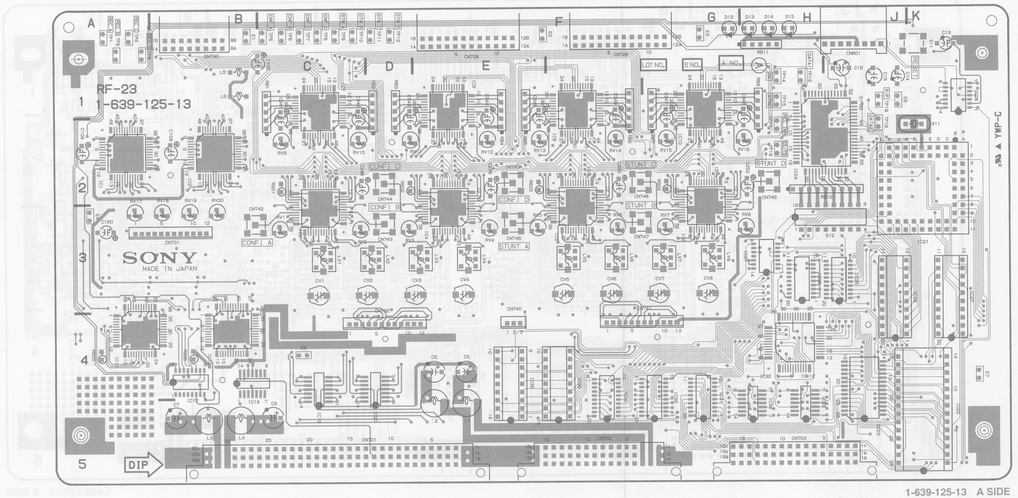

1-639-125-13 A SIDE

B Side

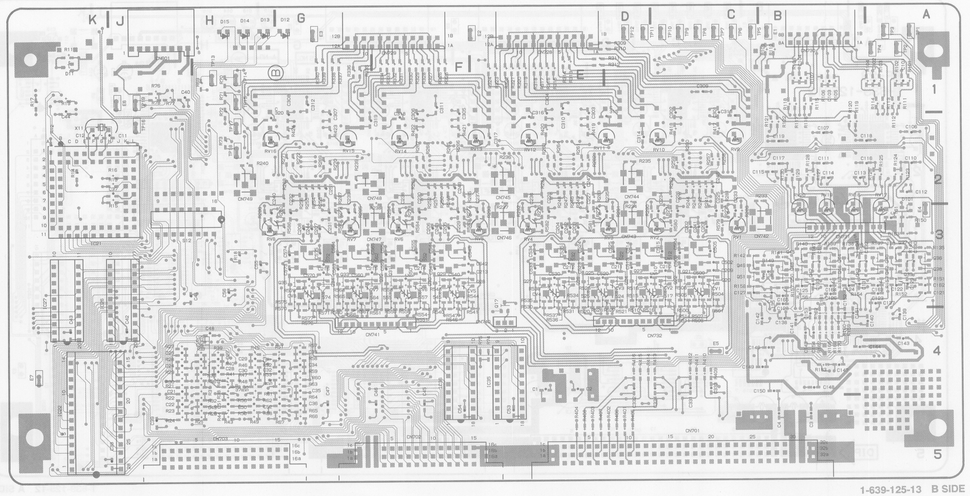

1-639-125-13 B SIDE

RF-23 (1-639-125-13)

DVR-2000
DVR-2100

CN601	J1	IC17	B4	Q34	*G3	RV18	B3		
CN701	C5	IC18	B4	Q35	*G3	RV19	B3		
CN702	F5	IC19	C5	Q36	*A3	RV20	B3		
CN703	H5	IC20	D5	Q37	*A3				
CN728	E1	IC21	K3	Q38	*A3	S11	K1		
CN729	F1	IC22	K5	Q39	*A3	S12	J3		
CN730	B1	IC23	J5	Q40	*A3				
CN731	B3	IC24	H2	Q41	*B3	TP1	A1		
CN732	D4	IC25	J3	Q42	*A3	TP2	A1		
CN740	E4	IC26	K3	Q43	*B3	TP3	A1		
CN741	F4	IC27	K3	Q44	*B3	TP4	A1		
CN742	B3	IC28	K1	Q45	*B3	TP5	C1		
CN743	D3	IC29	F5	Q46	*B3	TP6	C1		
CN744	D2	IC30	G5	Q47	*B3	TP7	C1		
CN745	E2	IC31	G5	Q48	*B3	TP8	C1		
CN746	E3	IC32	H4	Q49	*C3	TP9	C1		
CN747	F3	IC33	H5	Q50	*B3	TP10	C1		
CN748	F2	IC34	H5	Q51	*C3	TP11	D1		
CN749	H2	IC35	E4			TP12	D1		
		IC36	F4	RB1	C1	TP13	H1		
D11	*K1	IC37	H3	RB2	D1	TP14	H1		
D12	G1	IC38	H3	RB3	D1	TP15	H1		
D13	H1			RB4	E2	TP16	J2		
D14	H1	LV1	C3	RB5	E2	TP17	H2		
D15	H1	LV2	D3	RB6	F2	TP18	H2		
D101	*A2	LV3	E3	RB7	G2	TP19	J1		
		LV4	E3	RB8	H1				
E1	B1	LV5	F3	RB11	H1	X11	K2		
E2	E1	LV6	F3	RB12	H2				
E3	G1	LV7	G3						
E4	A3	LV8	G3	RV1	C3				
E5	C4			RV2	C3				
E6	J1	Q17	*E3	RV3	D3				
E7	K4	Q20	*C3	RV4	E3				
		Q21	*C3	RV5	E3				
IC1	A2	Q22	*C3	RV6	F3				
IC2	B2	Q23	*D3	RV7	G3				
IC3	C3	Q24	*D3	RV8	H3				
IC4	E3	Q25	*E3	RV9	C2				
IC5	F3	Q26	*E3	RV10	C2				
IC6	G3	Q27	*E3	RV11	D2				
IC7	C1	Q28	*E3	RV12	E2				
IC8	E1	Q29	*F3	RV13	E2				
IC9	F2	Q30	*F3	RV14	F2				
IC10	G2	Q31	*F3	RV15	G2				
IC11	A4	Q32	*F3	RV16	H2				
IC12	B4	Q33	*G3	RV17	A3				

* : B SIDE

CARD RACK **RF-23 BOARD** **RF-23 BOARD** CARD RACK

RF-23 BOARD (1-639-125-12)

DVR-2000	DVR-2100
J ; S/N 10001 through 10199	J ; S/N 10201 through 10799
UC ; S/N 10001 through 10299	UC ; S/N 10201 through 10199
EK ; S/N 10001 through 10599	EK ; S/N 10101 through 11099

A Side

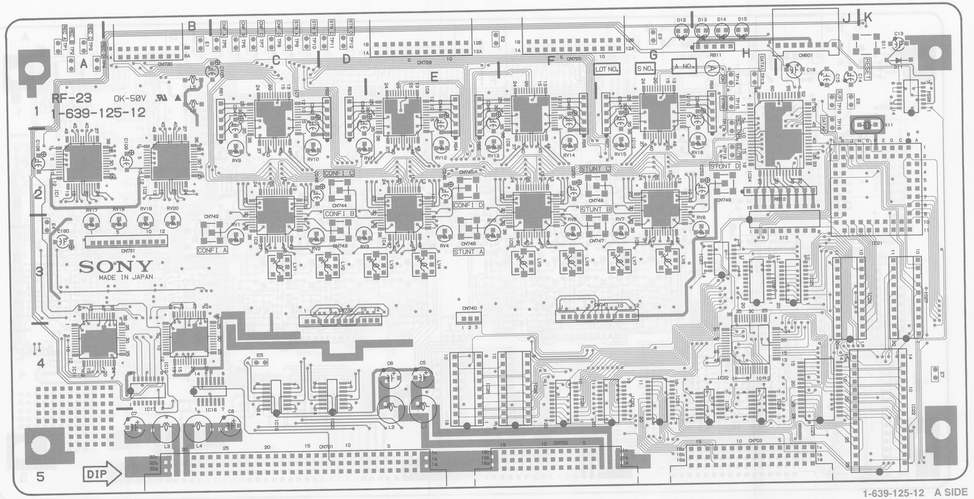

1-639-125-12 A SIDE

RF-23 (1-639-125-11, 12)

DVR-2000
DVR-2100

CNI21	K3	1) IC14	B3	2) Q35	G3	TP3	A1		
CNI22	K5	1) IC15	B3	2) Q36	A3	TP4	A1		
CNI26	K3	1) IC16	C3	2) Q37	A3	TP5	C1		
CNI27	K3	IC17	B4	2) Q38	A3	TP6	C1		
CNI35	E4	IC18	B5	2) Q39	A3	TP7	C1		
CNI36	F4	IC19	C5	2) Q40	A3	TP8	C1		
		IC20	D5	2) Q41	B3	TP9	C1		
CN601	J1	IC21	K3	2) Q42	A3	TP10	C1		
CN701	D5	IC22	K5	2) Q43	B3	TP11	D1		
CN702	F5	IC23	J5	2) Q44	B3	TP12	D1		
CN703	H5	IC24	H2	2) Q45	B3	TP13	H1		
CN728	E1	IC25	J3	2) Q46	B3	TP14	H1		
CN729	F1	IC26	K3	2) Q47	B3	TP15	H1		
CN730	B1	IC27	K3	2) Q48	B3	TP16	J2		
CN731	B3	IC28	K1	2) Q49	C3	TP17	H2		
CN732	D3	IC29	F5	2) Q50	B3	TP18	H2		
CN740	E3	IC30	G4	2) Q51	C3	TP19	J1		
CN741	G3	IC31	G5						
CN742	B2	IC32	H4	RB1	C1	X11	K2		
CN743	D3	IC33	H5	RB2	D1				
CN744	D2	IC34	H5	RB3	D1	＊; B SIDE			
CN745	E2	IC35	E4	RB4	E2	1) FOR SUFFIX-11			
CN746	E3	IC36	F4	RB5	E2	2) FOR SUFFIX-12			
CN747	F3	IC37	H3	RB6	F2				
CN748	F2	IC38	H3	RB7	G2				
CN749	H2			RB8	H1				
		LV1	C3	RB11	H1				
D11	K1	LV2	D3	RB12	J2				
D12	G1	LV3	E3						
D13	H1	LV4	E3	RV1	C3				
D14	H1	LV5	F3	RV2	C3				
D15	H1	LV6	F3	RV3	D3				
2) D101	＊A2	LV7	G3	RV4	E3				
		LV8	G3	RV5	E3				
E1	B1			RV6	F3				
E2	F1	Q1	＊B3	RV7	G3				
E3	G1	Q2	＊A3	RV8	H3				
E4	A3	Q3	＊B3	RV9	C2				
E5	C4	Q4	＊B3	RV10	C2				
E6	J1	Q17	＊E3	RV11	D2				
E7	K4	2) Q20	C3	RV12	E2				
		2) Q21	C3	RV13	E2				
IC1	A2	2) Q22	C3	RV14	F2				
IC2	B2	2) Q23	D3	RV15	G2				
IC3	C3	2) Q24	D3	RV16	H2				
IC4	E3	2) Q25	E3	2) RV17	A2				
IC5	F3	2) Q26	E3	2) RV18	B2				
IC6	G3	2) Q27	E3	2) RV19	B2				
IC7	C1	2) Q28	E3	2) RV20	B2				
IC8	E1	2) Q29	F3						
IC9	F2	2) Q30	F3	S11	K1				
IC10	G2	2) Q31	F3	S12	J3				
IC11	A4	2) Q32	F3						
IC12	B4	2) Q33	G3	TP1	A1				
1) IC13	A3	2) Q34	G3	TP2	A1				

CARD RACK **RF-23 BOARD** | **RF-23 BOARD** CARD RACK

B Side

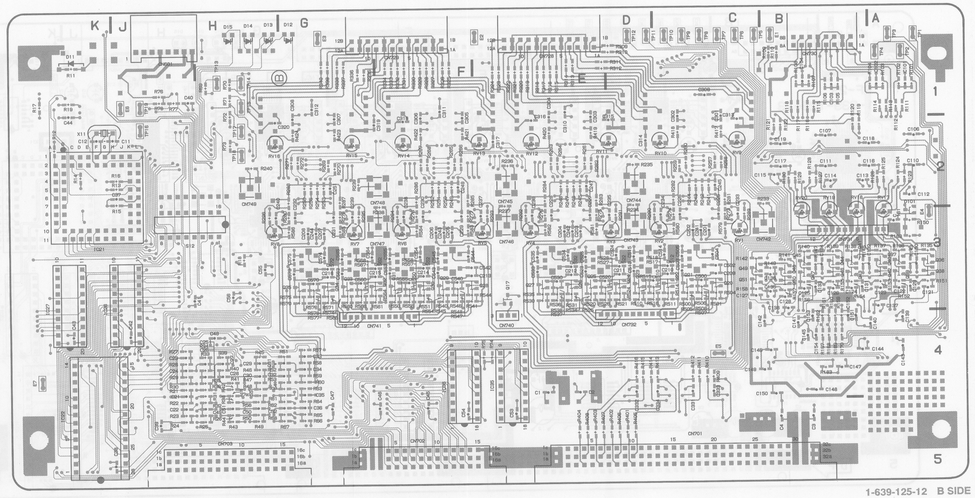

1-639-125-12 B SIDE

RF-23 BOARD (1-639-125-11)

DVR:2100
J : S/N 10001 through 10199
UC : S/N 10001 through 10199
EK : S/N 10001 through 10099

A Side

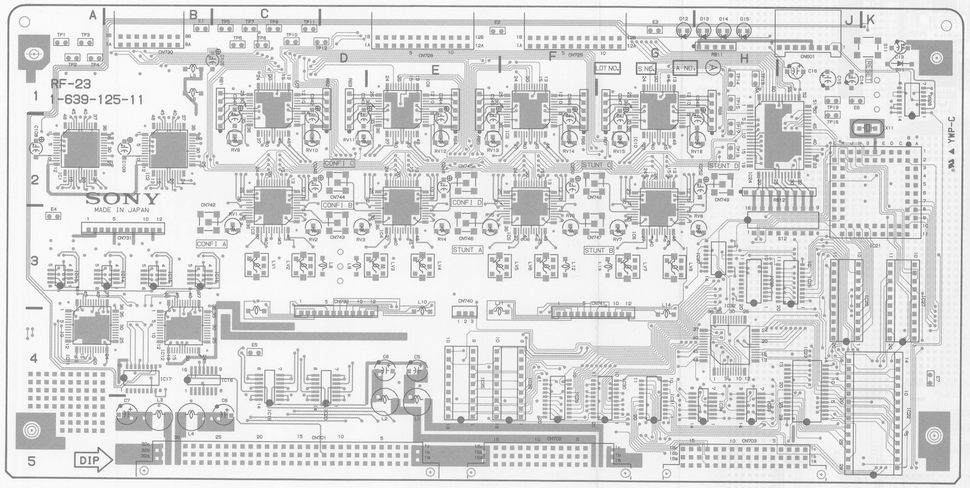

1-639-125-11 A SIDE

B Side

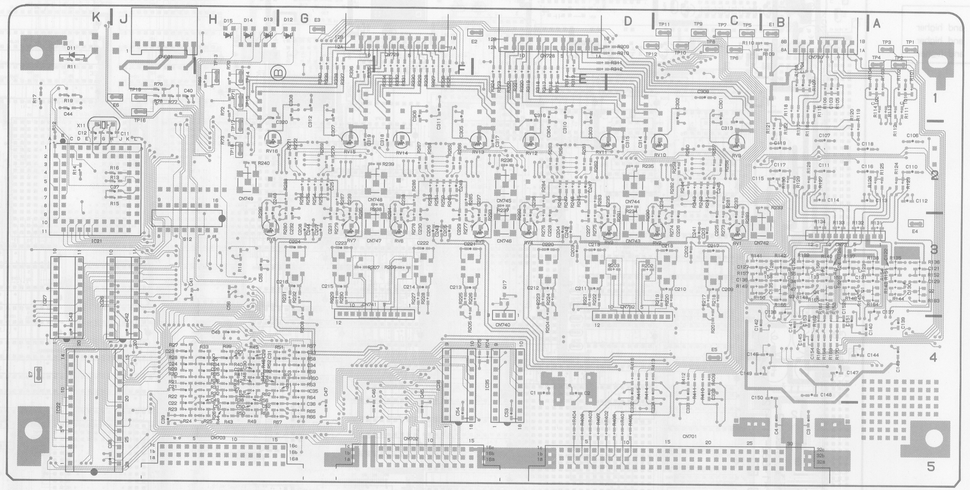

1-639-125-11 B SIDE

CARD RACK **RF-23 BOARD** **RF-23 BOARD** CARD RACK

RF-23 (1-639-125-11, 12)

DVR:2000
DVR:2100

CNI21	K3	1) IC14	B3	2) Q35	G3	TP3	A1
CNI22	K5	1) IC15	B3	2) Q36	A3	TP4	A1
CNI26	K3	1) IC16	C3	2) Q37	A3	TP5	C1
CNI27	K3	IC17	B4	2) Q38	A3	TP6	C1
CNI35	E4	IC18	B5	2) Q39	A3	TP7	C1
CNI36	F4	IC19	C5	2) Q40	A3	TP8	C1
		IC20	D5	2) Q41	B3	TP9	C1
CN601	J1	IC21	K3	2) Q42	A3	TP10	C1
CN701	D5	IC22	K5	2) Q43	B3	TP11	D1
CN702	F5	IC23	J5	2) Q44	B3	TP12	D1
CN703	H5	IC24	H2	2) Q45	B3	TP13	H1
CN728	E1	IC25	J3	2) Q46	B3	TP14	H1
CN729	F1	IC26	K3	2) Q47	B3	TP15	H1
CN730	B1	IC27	K3	2) Q48	B3	TP16	J2
CN731	B3	IC28	K1	2) Q49	C3	TP17	H2
CN732	D3	IC29	F5	2) Q50	B3	TP18	H2
CN740	E3	IC30	G4	2) Q51	C3	TP19	J1
CN741	G3	IC31	G5				
CN742	B2	IC32	H4	RB1	C1	X11	K2
CN743	D3	IC33	H5	RB2	D1		
CN744	D2	IC34	H5	RB3	D1	* : B SIDE	
CN745	E2	IC35	E4	RB4	E2	1) FOR SUFFIX-11	
CN746	E3	IC36	F4	RB5	E2	2) FOR SUFFIX-12	
CN747	F3	IC37	H3	RB6	F2		
CN748	F2	IC38	H3	RB7	G2		
CN749	H2			RB8	H1		
		LV1	C3	RB11	H1		
D11	K1	LV2	D3	RB12	J2		
D12	G1	LV3	E3				
D13	H1	LV4	E3	RV1	C3		
D14	H1	LV5	F3	RV2	C3		
D15	H1	LV6	F3	RV3	D3		
2) D101	*A2	LV7	G3	RV4	E3		
		LV8	G3	RV5	E3		
E1	B1			RV6	F3		
E2	F1	Q1	*B3	RV7	G3		
E3	G1	Q2	*A3	RV8	H3		
E4	A3	Q3	*B3	RV9	C2		
E5	C4	Q4	*B3	RV10	C2		
E6	J1	Q17	*E3	RV11	D2		
E7	K4	2) Q20	C3	RV12	E2		
		2) Q21	C3	RV13	E2		
IC1	A2	2) Q22	C3	RV14	F2		
IC2	B2	2) Q23	D3	RV15	G2		
IC3	C3	2) Q24	D3	RV16	H2		
IC4	E3	2) Q25	E3	2) RV17	A2		
IC5	F3	2) Q26	E3	2) RV18	B2		
IC6	G3	2) Q27	E3	2) RV19	B2		
IC7	C1	2) Q28	E3	2) RV20	B2		
IC8	E1	2) Q29	F3				
IC9	F2	2) Q30	F3	S11	K1		
IC10	G2	2) Q31	F3	S12	J3		
IC11	A4	2) Q32	F3				
IC12	B4	2) Q33	G3	TP1	A1		
1) IC13	A3	2) Q34	G3	TP2	A1		

20-5 (a)

CARD RACK **REC-09 BOARD** REC-09 BOARD CARD RACK

2100
S/N 10601 and higher
S/N 10601 and higher
S/N 10601 and higher

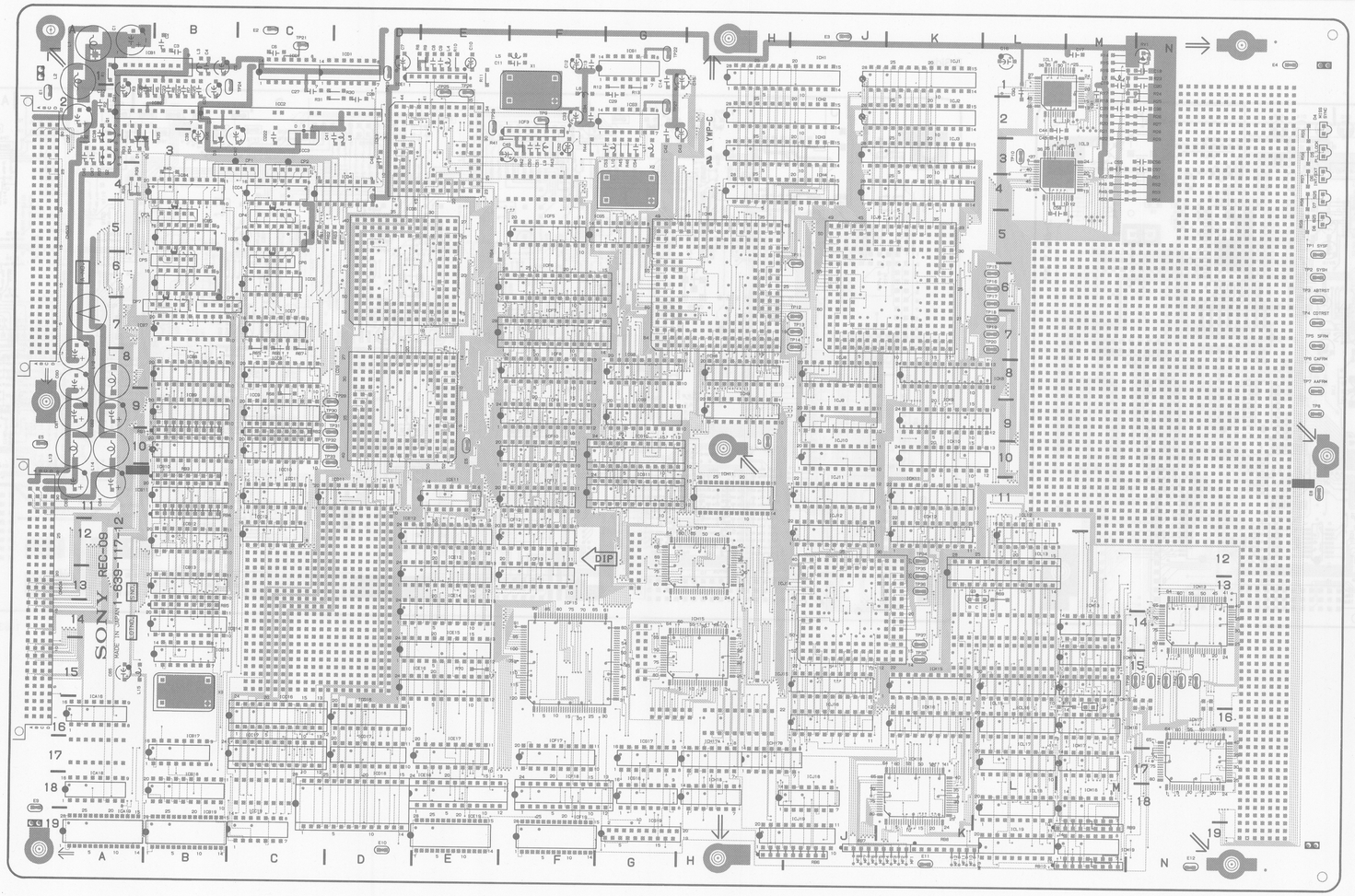

1-639-117-12 A SIDE

REC-09 BOARD CARD RACK

CARD RACK **REC-09 BOARD**

REC-09 BOARD (1-639-117-12)

B Side

DVR-2000	DVR-2100
J ; S/N 10201 and higher	J ; S/N 10601 and higher
UC ; S/N 10201 and higher	UC ; S/N 10601 and higher
EK ; S/N 10301 and higher	EK ; S/N 10601 and higher

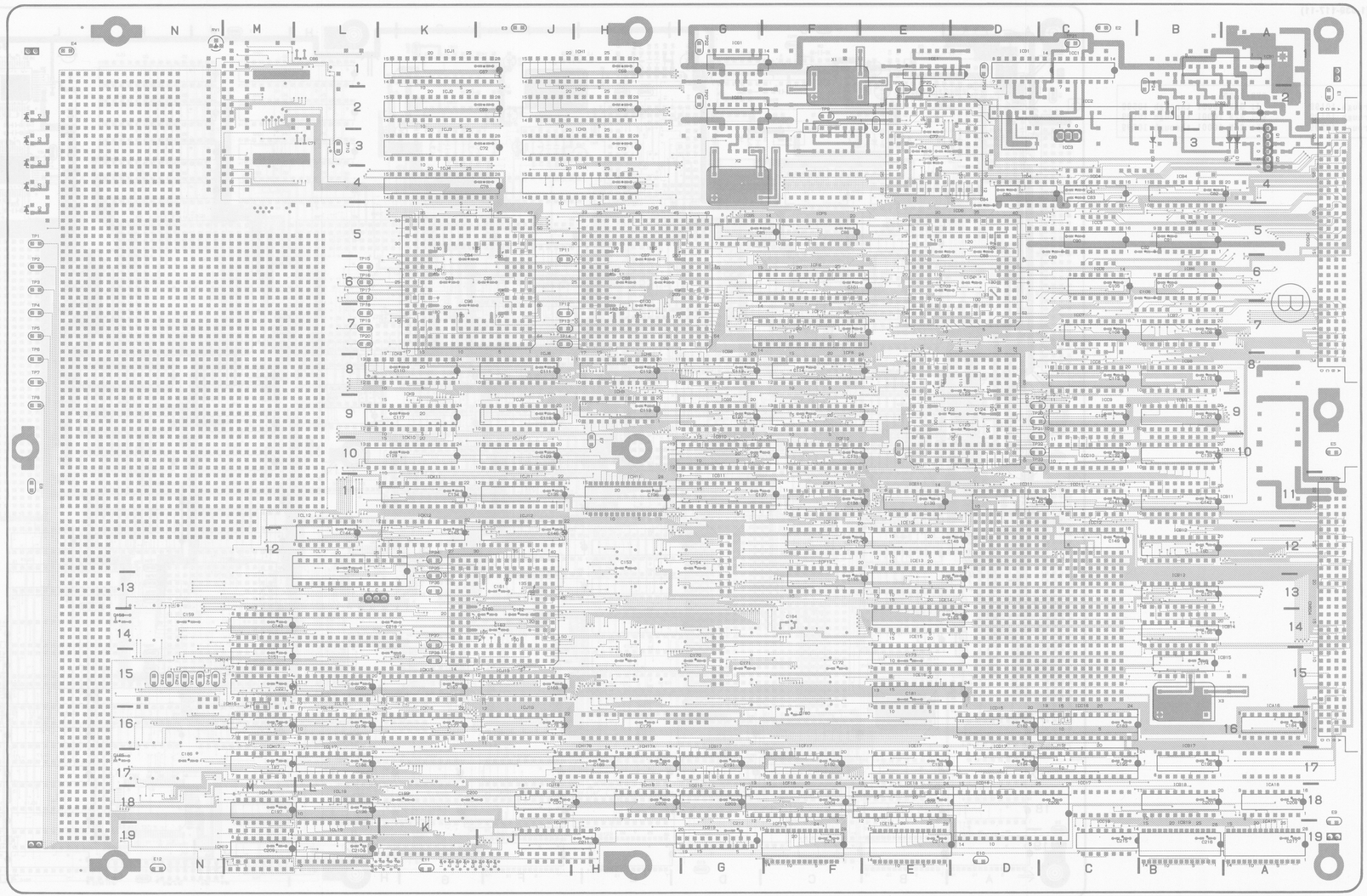

1-639-117-12 B SIDE

REC-09 (1-639-117-12)

DVR-2000
DVR-2100

CN503	A5	TP4	N7
CN504	A13	TP5	N7
		TP6	N7
CP1	C3	TP7	N8
CP2	C3	TP8	N9
CP3	A5	TP9	F2
CP4	C5	TP10	L3
CP5	A6	TP11	J5
CP6	C6	TP15	L6
CP7	A7	TP19	L7
CP8	B7	TP20	L7
		TP21	C1
D1	A3	TP22	G1
D2	A3	TP23	D1
D3	B3	TP24	C1
D4	N2	TP25	E1
D5	N3	TP26	E1
D6	N4	TP27	G2
D7	N4	TP28	E2
D8	N5	TP29	D9
		TP30	D9
E1	A2	TP31	D9
E2	C1	TP32	D10
E3	J1	TP33	D10
E4	N1	TP34	K12
E5	A10	TP35	K12
E6	E10	TP36	K13
E7	H10	TP37	K14
E8	N11	TP38	K15
E9	A18	TP39	N15
E10	D19	TP40	N15
E11	K19	TP41	N15
E12	N19	TP42	N15
		TP43	N15
JP1	M16		
		X1	F1
Q1	A2	X2	G3
Q2	A4	X3	B15
Q3	K13		
RB1	A10		
RB2	C10		
RB3	B11		
RB4	B11		
RB5	B14		
RB6	J19		
RB7	J19		
RB8	K19		
RB9	N19		
RB10	L19		
RV1	N1		
TP1	N5		
TP2	N6		
TP3	N6		

IC No. on this board shows its address.

20-7 (b)

REC-09 BOARD CARD RACK

REC-09 BOARD (1-639-117-11)

REC-09 (1-639-117-11)

DVR-2000
DVR-2100

CN503	A5	TP2	N6
CN504	A13	TP3	N6
		TP4	N7
CP1	C3	TP5	N7
CP2	C3	TP6	N7
CP3	A5	TP7	N8
CP4	C5	TP8	N9
CP5	A6	TP9	F2
CP6	C6	TP10	L3
CP7	A7	TP11	J5
CP8	B7	TP12	J7
		TP13	J7
D1	A3	TP14	J7
D2	A3	TP15	L6
D3	B3	TP16	L6
D4	N2	TP17	L6
D5	N3	TP18	L7
D6	N4	TP19	L7
D7	N4	TP20	L7
D8	N5	TP21	C1
		TP22	G1
E1	A2	TP23	D1
E2	C1	TP24	C1
E3	J1	TP25	E1
E4	N1	TP26	E1
E5	A10	TP27	G2
E6	E10	TP28	E2
E7	H10	TP29	D9
E8	N11	TP30	D9
E9	A18	TP31	D9
E10	D19	TP32	D10
E11	K19	TP33	D10
E12	N19	TP34	K12
		TP35	K12
JP1	M16	TP36	K13
		TP37	K14
Q1	A2	TP38	K15
Q2	A4	TP39	N15
Q3	K13	TP40	N15
		TP41	N15
RB1	A10	TP42	N15
RB2	L10	TP43	N15
RB3	B11		
RB4	B11	X1	F1
RB5	B14	X2	G3
RB6	J19	X3	B15
RB7	J19		
RB8	K19		
RB9	N19		
RB10	L19		
RV1	N1		
TP1	N5		

IC No. on this board shows its address.

A Side

DVR-2000	DVR-2100
J: S/N 10001 through 10199	J: S/N 10001 through 10599
UC: S/N 10001 through 10199	UC: S/N 10001 through 10599
EK: S/N 10001 through 10299	EK: S/N 10001 through 10599

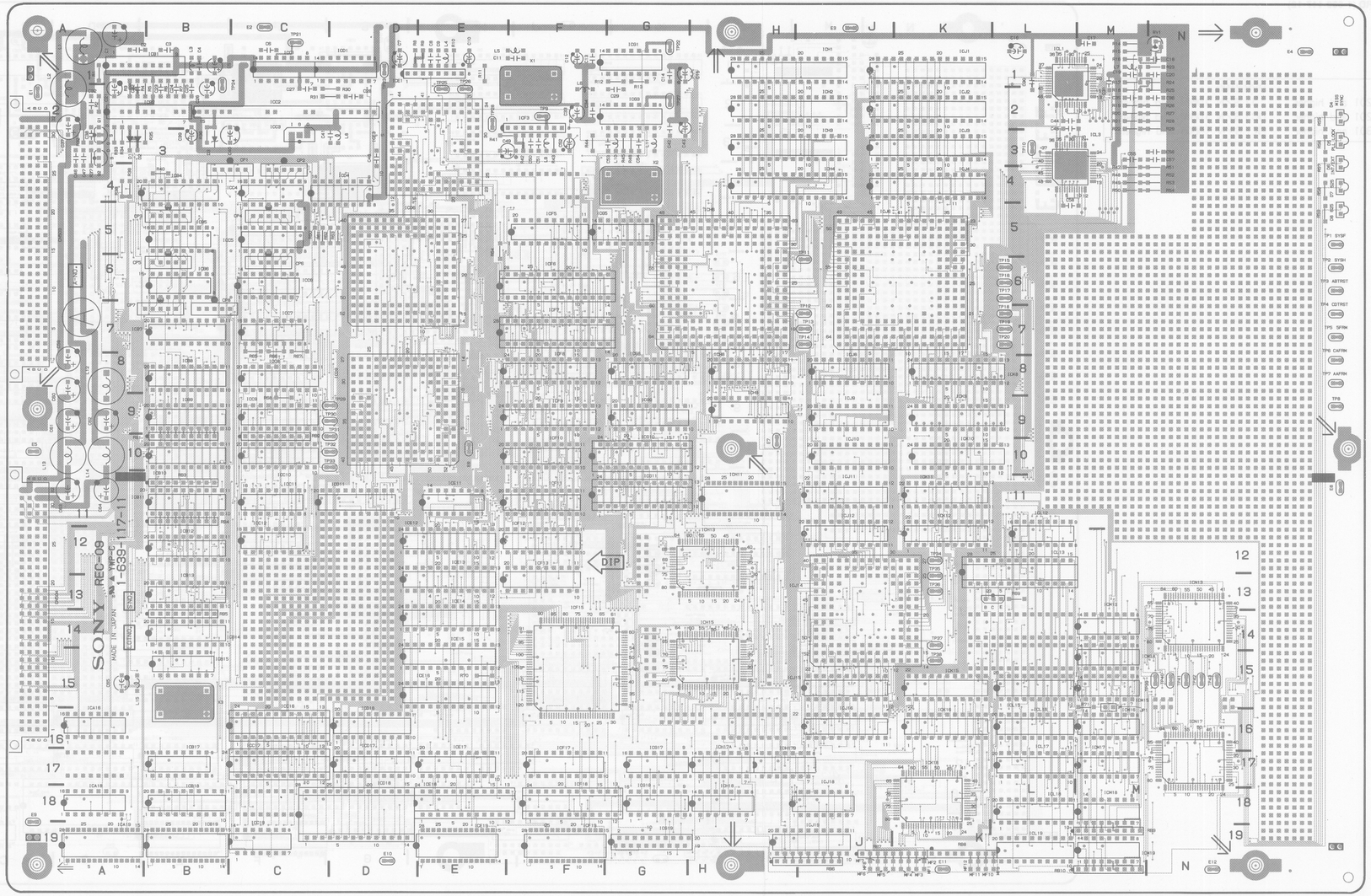

REC-09 BOARD CARD RACK

CARD RACK **REC-09 BOARD**

REC-09 BOARD (1-639-117-11)

B Side

DVR-2000	DVR-2100
J: S/N 10001 through 10199	J: S/N 10001 through 10599
UC: S/N 10001 through 10199	UC: S/N 10001 through 10599
EK: S/N 10001 through 10299	EK: S/N 10001 through 10599

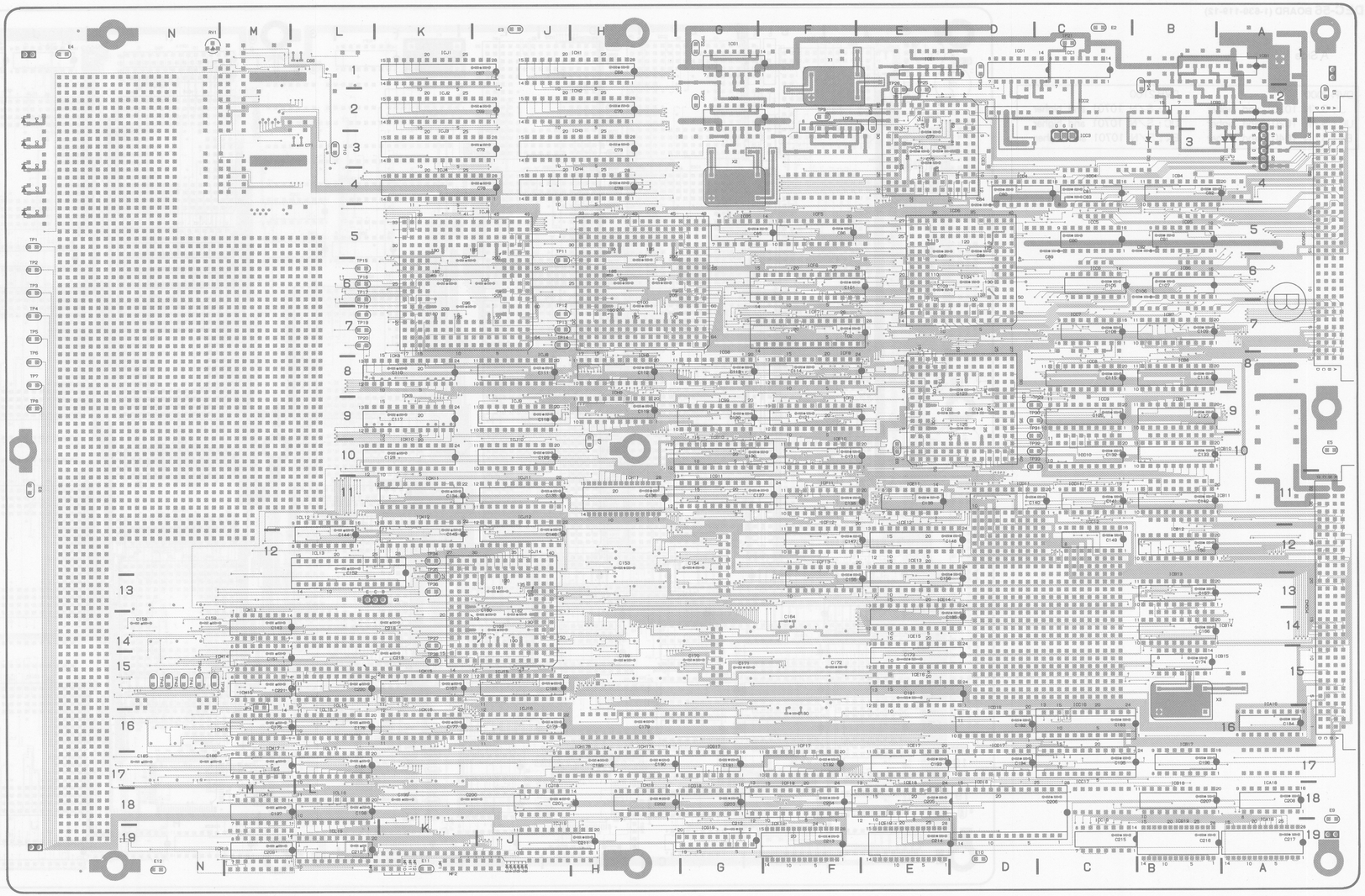

1-639-117-11 B SIDE

REC-09 (1-639-117-11)

DVR-2000
DVR-2100

CN503	A5	TP2	N6
CN504	A13	TP3	N6
		TP4	N7
CP1	C3	TP5	N7
CP2	C3	TP6	N7
CP3	A5	TP7	N8
CP4	C5	TP8	N9
CP5	A6	TP9	F2
CP6	C6	TP10	L3
CP7	A7	TP11	J5
CP8	B7	TP12	J7
		TP13	J7
D1	A3	TP14	J7
D2	A3	TP15	L6
D3	B3	TP16	L6
D4	N2	TP17	L6
D5	N3	TP18	L7
D6	N4	TP19	L7
D7	N4	TP20	L7
D8	N5	TP21	C1
		TP22	G1
E1	A2	TP23	D1
E2	C1	TP24	C1
E3	J1	TP25	E1
E4	N1	TP26	E1
E5	A10	TP27	G2
E6	E10	TP28	E2
E7	H10	TP29	D9
E8	N11	TP30	D9
E9	A18	TP31	D9
E10	D19	TP32	D10
E11	K19	TP33	D10
E12	N19	TP34	K12
		TP35	K12
JP1	M16	TP36	K13
		TP37	K14
Q1	A2	TP38	K15
Q2	A4	TP39	N15
Q3	K13	TP40	N15
		TP41	N15
RB1	A10	TP42	N15
RB2	L10	TP43	N15
RB3	B11		
RB4	B11	X1	F1
RB5	B14	X2	G3
RB6	J19	X3	B15
RB7	J19		
RB8	K19		
RB9	N19		
RB10	L19		
RV1	N1		
TP1	N5		

IC No. on this board shows its address.

20-7 (a)

CARD RACK DEC-56 BOARD DEC-56 BOARD CARD RACK

DEC-56 BOARD (1-639-119-12)

DEC-56 (1-639-119-12)

DVR-2000
DVR-2100

CN507	A6		
CN508	A15	TP1	N12
		TP2	N12
CP1	B1	TP3	N12
CP2	B1	TP4	N12
CP3	B3	TP5	N13
CP4	B4	TP6	N13
CP5	B5	TP7	N13
CP6	B5	TP8	N13
CP7	B7	TP9	N13
CP8	B6	TP10	N14
CP9	B8	TP11	N14
CP10	B8	TP12	N14
CP11	B10	TP13	N15
CP12	B9	TP14	N15
CP13	B12	TP15	N16
CP14	B12	TP16	N16
CP15	B13	TP17	N16
CP16	B13	TP18	N17
		TP25	D3
D1	N3	TP26	D3
D2	N3	TP48	D6
D3	N3	TP49	D7
D4	N4	TP55	D9
D9	N7	TP56	D9
D10	N7	TP62	D12
		TP63	D13
E1	A1	TP83	H19
E2	H1	TP84	H19
E3	M1	TP85	H17
E4	K7		
E5	A9	X1	F1
E7	G12		
E8	N11		
E9	A19		
E10	G20		
E12	N19		
RB1	N3		
RB2	N5		
RB5	C13		
RB6	D13		
RB7	C14		
RB8	E14		
RB9	A14		
RB10	D15		
RB11	F14		
RB12	A16		
RB13	B16		
RB14	D16		
RB15	E16		
RB16	A16		
RB17	B16		
RB18	B17		
RB19	D18		
RB20	D19		

IC No. on this board shows its address.

A Side

DVR-2000	DVR-2100
J ; S/N 10201 and higher	J ; S/N 10701 and higher
UC ; S/N 10201 and higher	UC ; S/N 10701 and higher
EK ; S/N 10401 and higher	EK ; S/N 10701 and higher

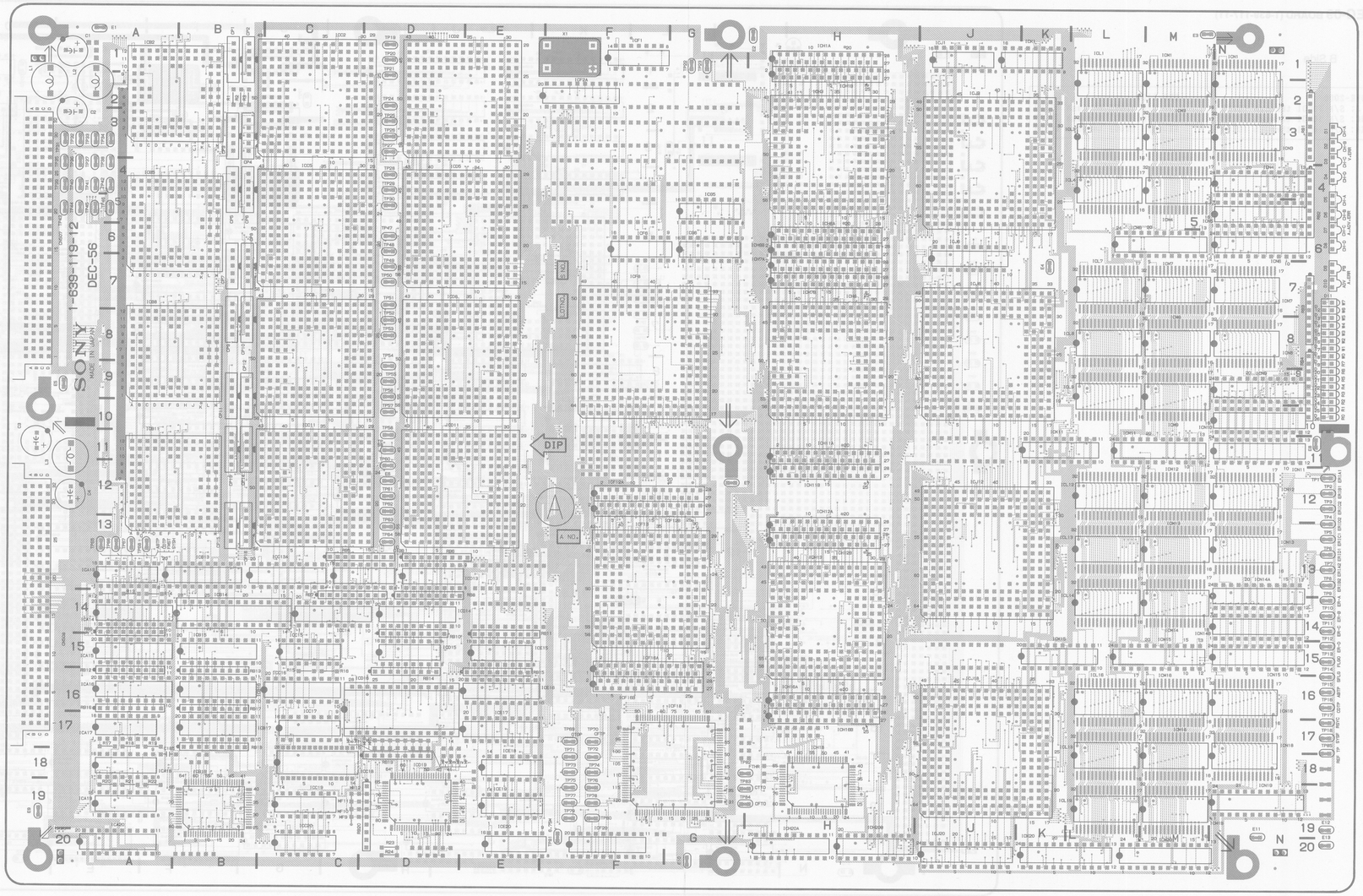

1-639-119-12 A SIDE

20-8 (b)

DEC-56 BOARD CARD RACK

DEC-56 BOARD (1-639-119-11)

B Side

DVR-2000	DVR-2100
J: S/N 10001 through 10199	J: S/N 10001 through 10699
UC: S/N 10001 through 10199	UC: S/N 10001 through 10699
EK: S/N 10001 through 10399	EK: S/N 10001 through 10699

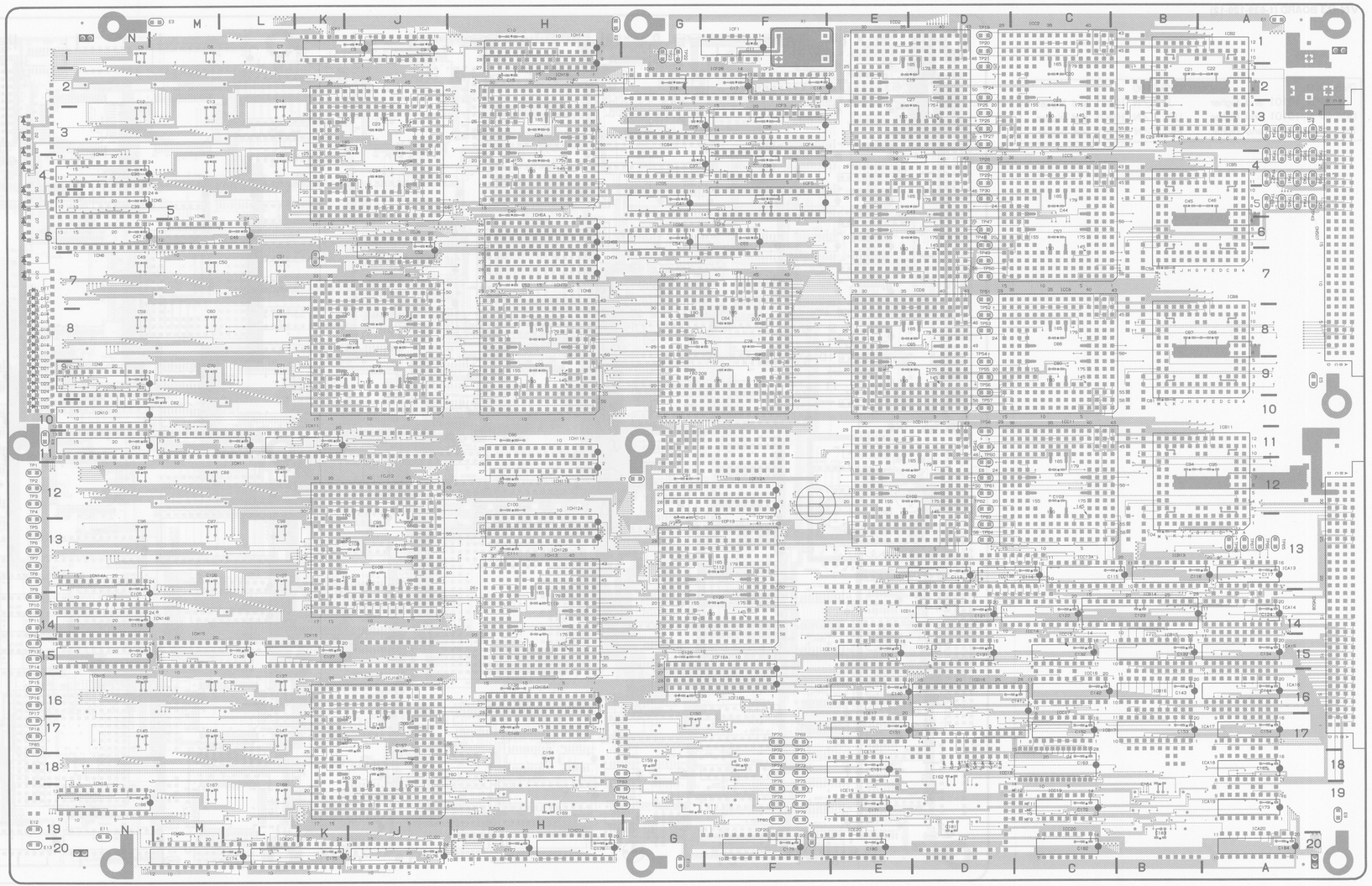

1-639-119-11 B SIDE

DEC-56 (1-639-119-11)

DVR-2000
DVR-2100

CN507	A6	RB16	A16	TP49	D7
CN508	A15	RB17	B16	TP50	D7
		RB18	B17	TP51	D7
CP1	B1	RB19	D18	TP52	D8
CP2	B1	RB20	D19	TP53	D8
CP3	B3			TP54	D8
CP4	B4	TP1	N12	TP55	D9
CP5	B5	TP2	N12	TP56	D9
CP6	B5	TP3	N12	TP57	D10
CP7	B7	TP4	N12	TP58	D10
CP8	B6	TP5	N13	TP59	D11
CP9	B8	TP6	N13	TP60	D11
CP10	B8	TP7	N13	TP61	D12
CP11	B10	TP8	N13	TP62	D12
CP12	B9	TP9	N13	TP63	D13
CP13	B12	TP10	N14	TP64	D13
CP14	B12	TP11	N14	TP65	A13
CP15	B13	TP12	N14	TP66	A13
CP16	B13	TP13	N15	TP67	A13
		TP14	N15	TP68	A13
D1	N3	TP15	N16	TP69	F17
D2	N3	TP16	N16	TP70	F17
D3	N3	TP17	N16	TP71	F17
D4	N4	TP18	N17	TP72	F17
D9	N7	TP19	D1	TP73	F18
D10	N7	TP20	D1	TP74	F18
		TP21	D1	TP75	F18
E1	A1	TP22	G1	TP76	F18
E2	H1	TP23	G1	TP77	F19
E3	M1	TP24	D2	TP78	F19
E4	K7	TP25	D3	TP79	F19
E5	A9	TP26	D3	TP80	F19
E6	D12	TP27	D3	TP81	F20
E7	G12	TP28	D4	TP82	H18
E8	N11	TP29	D4	TP83	H19
E9	A19	TP30	D5	TP84	H19
E10	G20	TP31	A3	TP85	H17
E11	N19	TP32	A3		
E12	N19	TP33	A3	X1	F1
E13	N20	TP34	A3		
		TP35	A4		
RB1	N3	TP36	A4		
RB2	N5	TP37	A4		
RB5	C13	TP38	A4		
RB6	D13	TP39	A4		
RB7	C14	TP40	A4		
RB8	E14	TP41	A4		
RB9	A14	TP42	A4		
RB10	D15	TP43	A5		
RB11	F14	TP44	A5		
RB12	A16	TP45	A5		
RB13	B16	TP46	A5		
RB14	D16	TP47	D6		
RB15	E16	TP48	D6		

IC No. on this board shows its address.

20-9 (a)

CARD RACK VN-03 BOARD

VN-03 BOARD CARD RACK

VN-03 (1-639-120-11, 12)

DVR-2000
DVR-2100

CN1	Q18	RB33	Q15	TP55	A20
CN2	Q20	RB34	Q4	TP76	Q16
CN509	A6	RB35	Q4	TP77	Q16
CN510	A18	RB36	Q12	TP78	Q15
		RB37	C25		
CP1	A13	RB38	B25	X1	P1
D1	Q4	RV1	D25		
D1	Q22				
		S1	Q22		
E1	A1				
E2	D1	TP1	H22		
E3	H1	TP2	H24		
E4	P1	TP3	D9		
E5	A12	TP4	Q6		
E6	D13	TP5	D5		
E7	H14	TP6	Q6		
E8	Q11	TP7	Q7		
E9	Q12	TP8	Q6		
E10	A25	TP9	F15		
E11	F25	TP10	G16		
E12	J25	TP11	G17		
E13	P25	TP12	Q7		
		TP16	Q8		
RB1	H24	TP23	K24		
RB2	H25	TP24	K24		
RB3	H23	TP25	K24		
RB4	J22	TP26	K20		
RB5	D6	TP27	K20		
RB6	A5	TP28	K20		
RB7	A6	TP29	P16		
RB8	A7	TP30	L24		
RB9	D14	TP31	Q5		
RB10	D15	TP32	Q5		
RB11	D17	TP33	G13		
RB12	D18	TP34	G13		
RB13	F13	TP35	H13		
RB14	A10	TP36	H13		
RB15	A12	TP37	J13		
RB16	D9	TP38	J13		
RB17	D7	TP39	J13		
RB18	A9	TP40	F13		
RB19	A21	TP41	F10		
RB20	A22	TP42	E10		
RB21	A24	TP43	E10		
RB22	A17	TP44	E10		
RB23	A18	TP45	D7		
RB24	A20	TP46	D7		
RB25	M1	TP47	M10		
RB26	M4	TP48	F1		
RB27	D3	TP49	F1		
RB28	A2	TP50	F1		
RB29	C2	TP51	F1		
RB30	Q20	TP52	F1		
RB31	P15	TP53	E4		
RB32	M14	TP54	A19		

IC No. on this board shows its address.

VN-03 BOARD (1-639-120-12)

A Side

DVR-2000	DVR-2100
J ; S/N 10101 and higher	J ; S/N 10401 and higher
UC ; S/N 10101 and higher	UC ; S/N 10401 and higher
EK ; S/N 10101 and higher	EK ; S/N 10401 and higher

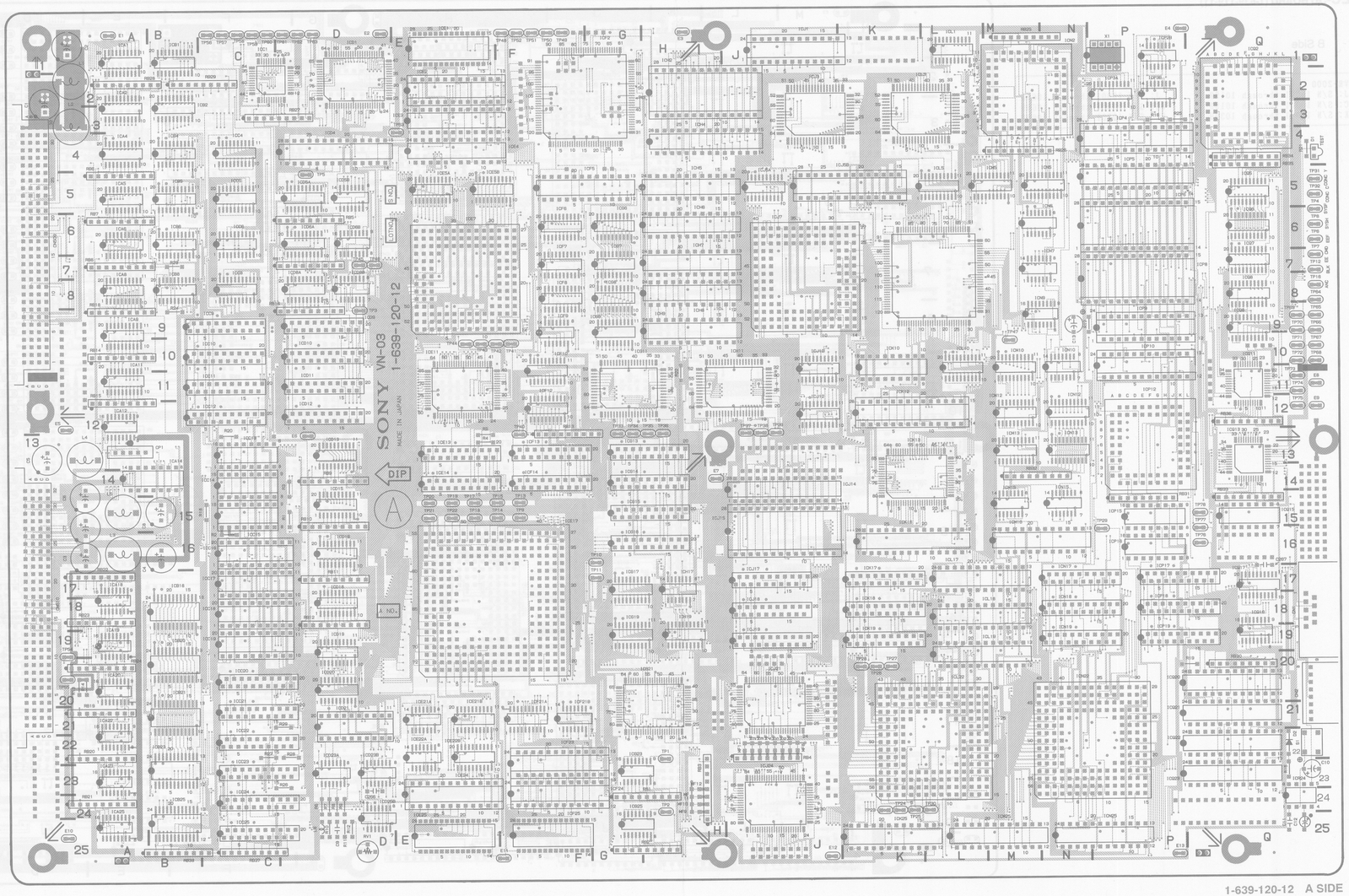

1-639-120-12 A SIDE

20-10 (b)

CARD RACK VN-03 BOARD

VN-03 BOARD (1-639-120-12)

B Side

DVR-2000	DVR-2100
J ; S/N 10101 and higher	J ; S/N 10401 and higher
UC ; S/N 10101 and higher	UC ; S/N 10401 and higher
EK ; S/N 10101 and higher	EK ; S/N 10401 and higher

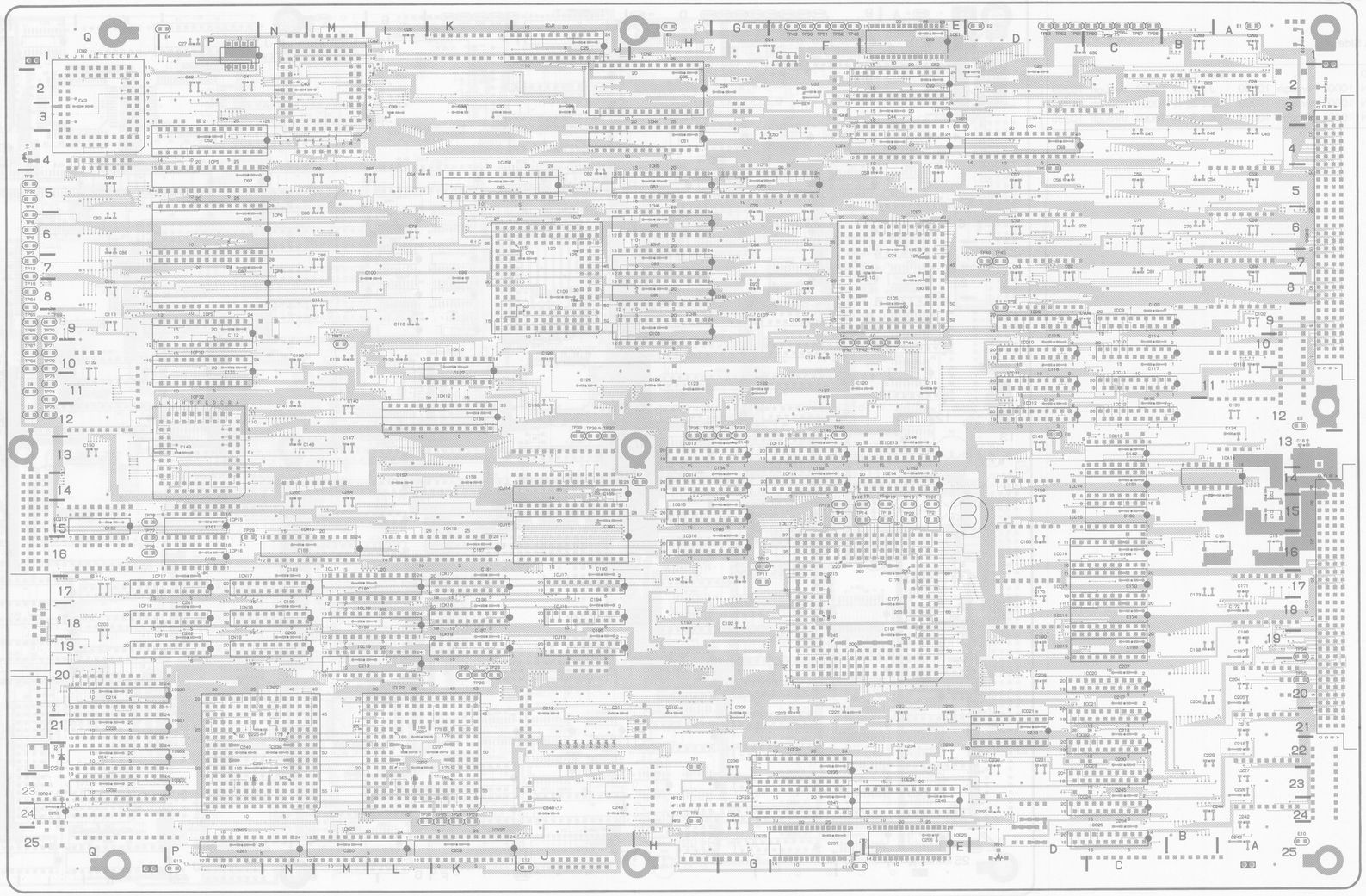

1-639-120-12 B SIDE

VN-03 (1-639-120-11, 12)

DVR-2000
DVR-2100

CN1	Q18	RB33	Q15	TP55	A20
CN2	Q20	RB34	Q4	TP76	Q16
CN509	A6	RB35	Q4	TP77	Q16
CN510	A18	RB36	Q12	TP78	Q15
		RB37	C25		
CP1	A13	RB38	B25	X1	P1
D1	Q4	RV1	D25		
D1	Q22				
		S1	Q22		
E1	A1				
E2	D1	TP1	H22		
E3	H1	TP2	H24		
E4	P1	TP3	D9		
E5	A12	TP4	Q6		
E6	D13	TP5	D5		
E7	H14	TP6	Q6		
E8	Q11	TP7	Q7		
E9	Q12	TP8	Q6		
E10	A25	TP9	F15		
E11	F25	TP10	G16		
E12	J25	TP11	G17		
E13	P25	TP12	Q7		
		TP16	Q8		
RB1	H24	TP23	K24		
RB2	H25	TP24	K24		
RB3	H23	TP25	K24		
RB4	J22	TP26	K20		
RB5	D6	TP27	K20		
RB6	A5	TP28	K20		
RB7	A6	TP29	P16		
RB8	A7	TP30	L24		
RB9	D14	TP31	Q5		
RB10	D15	TP32	Q5		
RB11	D17	TP33	G13		
RB12	D18	TP34	G13		
RB13	F13	TP35	H13		
RB14	A10	TP36	H13		
RB15	A12	TP37	J13		
RB16	D9	TP38	J13		
RB17	D7	TP39	J13		
RB18	A9	TP40	F13		
RB19	A21	TP41	F10		
RB20	A22	TP42	E10		
RB21	A24	TP43	E10		
RB22	A17	TP44	E10		
RB23	A18	TP45	D7		
RB24	A20	TP46	D7		
RB25	M1	TP47	M10		
RB26	M4	TP48	F1		
RB27	D3	TP49	F1		
RB28	A2	TP50	F1		
RB29	C2	TP51	F1		
RB30	Q20	TP52	F1		
RB31	P15	TP53	E4		
RB32	M14	TP54	A19		

IC No. on this board shows its address.

20-11 (b)

CARD RACK VN-03 BOARD

VN-03 BOARD CARD RACK

VN-03 BOARD (1-639-120-11)

VN-03 (1-639-120-11, 12)

DVR-2000
DVR-2100

CN1	Q18	RB33	Q15	TP46	D7
CN2	Q20	RB34	Q4	TP47	M10
CN509	A6	RB35	Q4	TP48	F1
CN510	A18	RB36	Q12	TP49	F1
		RB37	C25	TP50	F1
CP1	A13	RB38	B25	TP51	F1
				TP52	F1
D1	Q4	RV1	D25	TP53	E4
D1	Q22			TP54	A19
		S1	Q22	TP55	A20
E1	A1			TP56	C1
E2	D1	TP1	H22	TP57	C1
E3	H1	TP2	H24	TP58	C1
E4	P1	TP3	D9	TP59	C1
E5	A12	TP4	Q6	TP60	C1
E6	D13	TP5	D5	TP61	D1
E7	H14	TP6	Q6	TP62	D1
E8	Q11	TP7	Q7	TP63	D1
E9	Q12	TP8	Q6	TP64	Q8
E10	A25	TP9	F15	TP65	Q9
E11	F25	TP10	G16	TP66	Q9
E12	J25	TP11	G17	TP67	Q10
E13	P25	TP12	Q7	TP68	Q10
		TP13	F15	TP69	Q9
RB1	H24	TP14	E15	TP70	Q9
RB2	H25	TP15	E15	TP71	Q10
RB3	H23	TP16	Q8	TP72	Q10
RB4	J22	TP17	E15	TP73	Q11
RB5	D6	TP18	E15	TP74	Q11
RB6	A5	TP19	E15	TP75	Q12
RB7	A6	TP20	E15	TP76	Q16
RB8	A7	TP21	E15	TP77	Q16
RB9	D14	TP22	E15	TP78	Q15
RB10	D15	TP23	K24		
RB11	D17	TP24	K24	X1	P1
RB12	D18	TP25	K24		
RB13	F13	TP26	K20		
RB14	A10	TP27	K20		
RB15	A12	TP28	K20		
RB16	D9	TP29	P16		
RB17	D7	TP30	L24		
RB18	A9	TP31	Q5		
RB19	A21	TP32	Q5		
RB20	A22	TP33	G13		
RB21	A24	TP34	G13		
RB22	A17	TP35	H13		
RB23	A18	TP36	H13		
RB24	A20	TP37	J13		
RB25	M1	TP38	J13		
RB26	M4	TP39	J13		
RB27	D3	TP40	F13		
RB28	A2	TP41	F10		
RB29	C2	TP42	E10		
RB30	Q20	TP43	E10		
RB31	P15	TP44	E10		
RB32	M14	TP45	D7		

IC No. on this board shows its address.

A Side

DVR-2000	DVR-2100
J ; S/N 10001 through 10099	J ; S/N 10001 through 10399
UC ; S/N 10001 through 10099	UC ; S/N 10001 through 10399
EK ; S/N 10001 through 10399	EK ; S/N 10001 through 10399

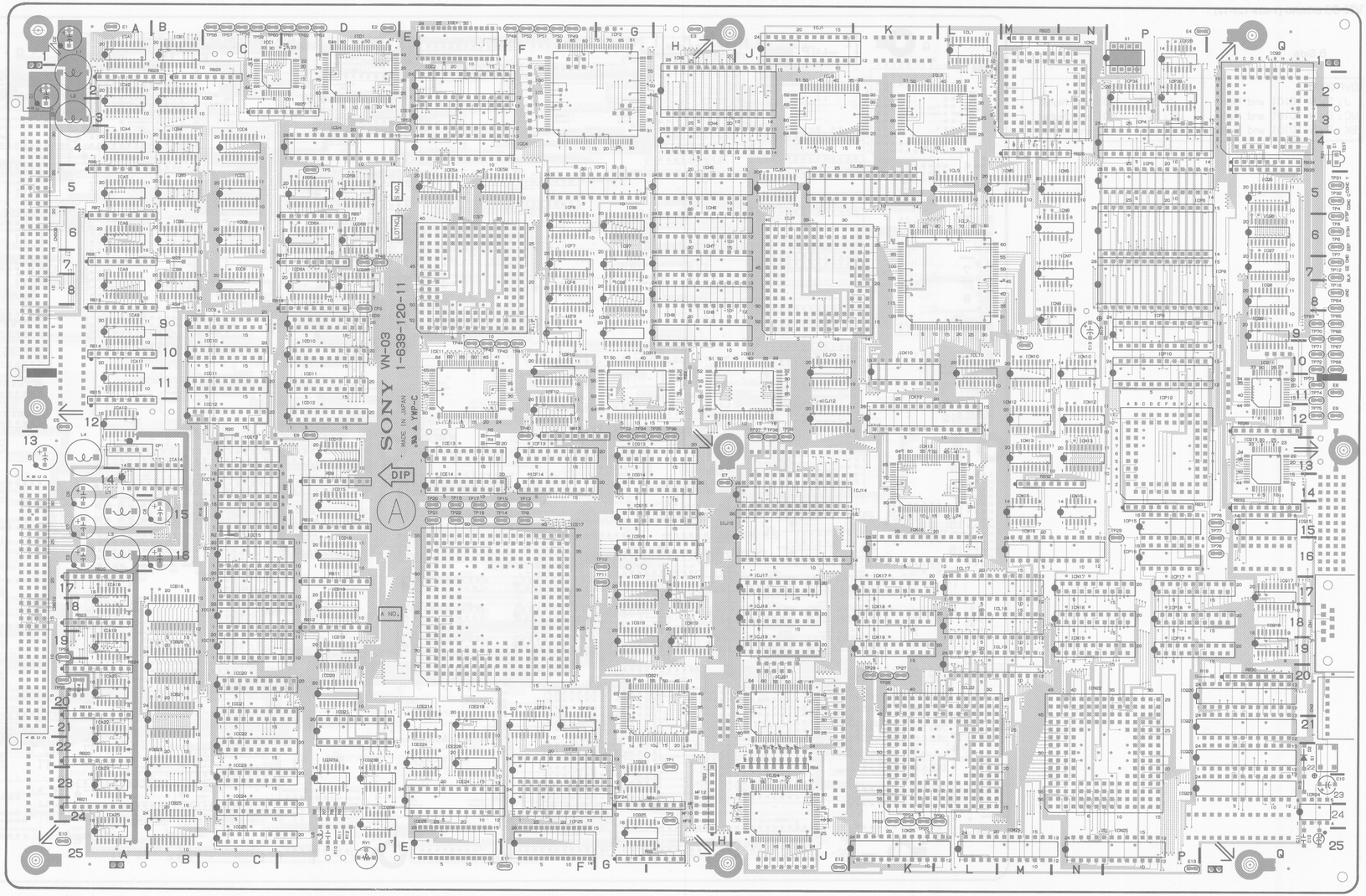

20-10 (a)

VN-03 BOARD CARD RACK

CARD RACK **VN-03 BOARD**

VN-03 BOARD (1-639-120-11)

B Side

DVR-2000	DVR-2100
J ; S/N 10001 through 10099	J ; S/N 10001 through 10399
UC ; S/N 10001 through 10099	UC ; S/N 10001 through 10399
EK ; S/N 10001 through 10099	EK ; S/N 10001 through 10399

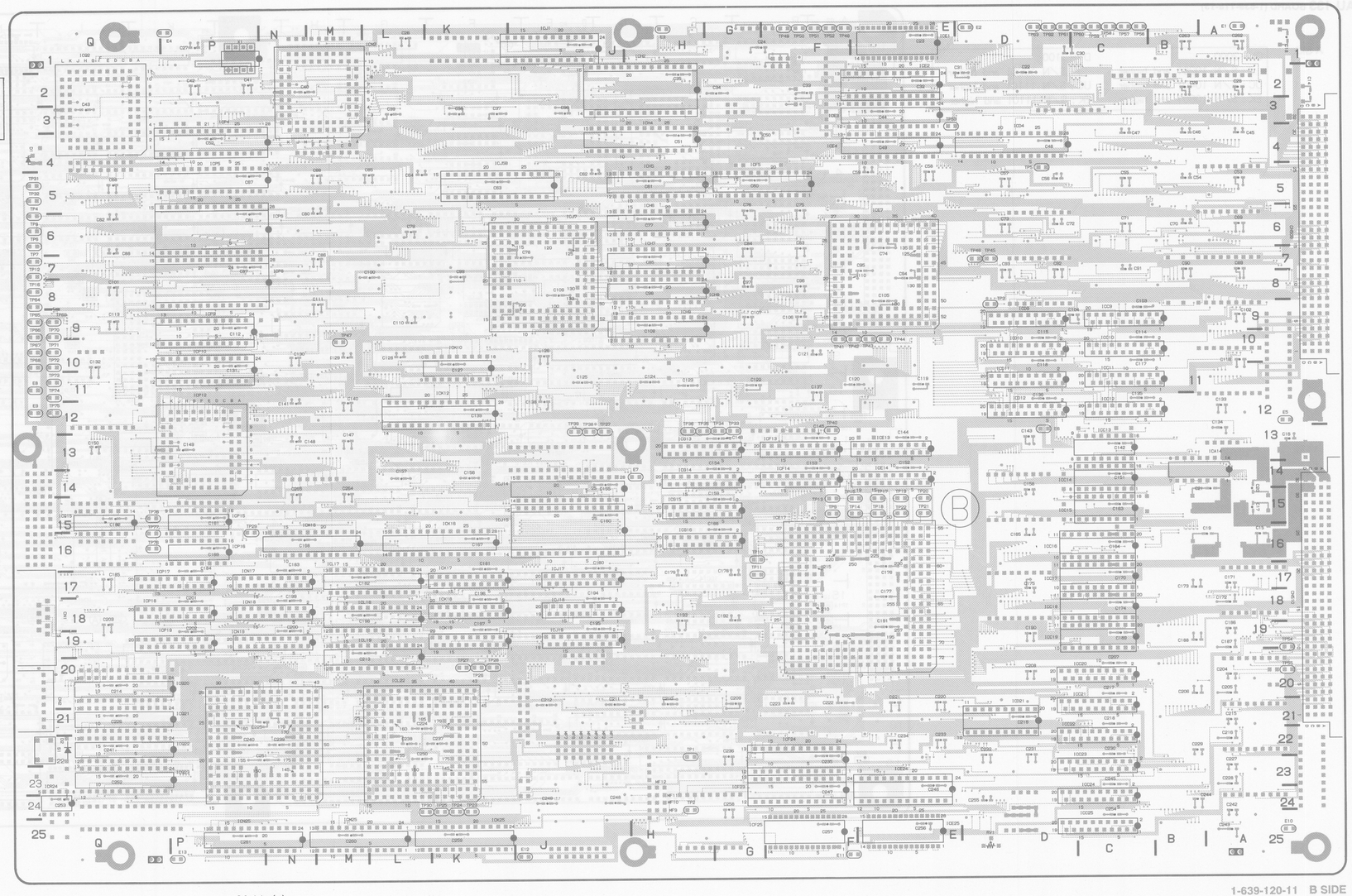

20-11 (a)

1-639-120-11 B SIDE

VN-03 (1-639-120-11, 12)

DVR-2000
DVR-2100

CN1	Q18	RB33	Q15	TP46	D7
CN2	Q20	RB34	Q4	TP47	M10
CN509	A6	RB35	Q4	TP48	F1
CN510	A18	RB36	Q12	TP49	F1
		RB37	C25	TP50	F1
CP1	A13	RB38	B25	TP51	F1
				TP52	F1
D1	Q4	RV1	D25	TP53	E4
D1	Q22			TP54	A19
		S1	Q22	TP55	A20
E1	A1			TP56	C1
E2	D1	TP1	H22	TP57	C1
E3	H1	TP2	H24	TP58	C1
E4	P1	TP3	D9	TP59	C1
E5	A12	TP4	Q6	TP60	C1
E6	D13	TP5	D5	TP61	D1
E7	H14	TP6	Q6	TP62	D1
E8	Q11	TP7	Q7	TP63	D1
E9	Q12	TP8	Q6	TP64	Q8
E10	A25	TP9	F15	TP65	Q9
E11	F25	TP10	G16	TP66	Q9
E12	J25	TP11	G17	TP67	Q10
E13	P25	TP12	Q7	TP68	Q10
		TP13	F15	TP69	Q9
RB1	H24	TP14	E15	TP70	Q9
RB2	H25	TP15	E15	TP71	Q10
RB3	H23	TP16	Q8	TP72	Q10
RB4	J22	TP17	E15	TP73	Q11
RB5	D6	TP18	E15	TP74	Q11
RB6	A5	TP19	E15	TP75	Q12
RB7	A6	TP20	E15	TP76	Q16
RB8	A7	TP21	E15	TP77	Q16
RB9	D14	TP22	E15	TP78	Q15
RB10	D15	TP23	K24		
RB11	D17	TP24	K24	X1	P1
RB12	D18	TP25	K24		
RB13	F13	TP26	K20		
RB14	A10	TP27	K20		
RB15	A12	TP28	K20		
RB16	D9	TP29	P16		
RB17	D7	TP30	L24		
RB18	A9	TP31	Q5		
RB19	A21	TP32	Q5		
RB20	A22	TP33	G13		
RB21	A24	TP34	G13		
RB22	A17	TP35	H13		
RB23	A18	TP36	H13		
RB24	A20	TP37	J13		
RB25	M1	TP38	J13		
RB26	M4	TP39	J13		
RB27	D3	TP40	F13		
RB28	A2	TP41	F10		
RB29	C2	TP42	E10		
RB30	Q20	TP43	E10		
RB31	P15	TP44	E10		
RB32	M14	TP45	D7		

IC No. on this board shows its address.

20-11 (a)

AU-133 BOARD CARD RACK

AU-133 BOARD (1-639-118-13)

AU-133 (1-639-118-13)

DVR-2000
DVR-2100

CN1	D11	RB16	C17
CN2	D11		
CN3	A19	TP1	R5
CN4	A19	TP2	R5
CN505	A2	TP3	R6
CN506	A11	TP4	R6
		TP5	R7
D1	R5	TP6	R7
D2	R4	TP7	R7
D3	R4	TP8	R8
D4	R4	TP9	R8
D5	R3	TP10	R9
D6	R3	TP11	R12
		TP12	R12
E1	A3	TP13	R12
E2	A11	TP15	R12
E3	A19	TP16	R15
E4	G10	TP17	P16
E5	K1	TP18	P6
E6	J10	TP19	P11
E7	K19	TP24	G3
E8	L6	TP37	D13
E9	R1	TP38	H16
E10	P15	TP42	M14
E11	R19	TP43	P17
E12	R11	TP44	P15
E13	R11	TP45	P15
		TP53	L7
MF1	M2	TP54	M6
MF2	M2	TP58	M15
MF3	M2	TP60	K15
MF4	M2		
MF5	M2	X1	F1
MF6	M2		
MF7	M2		
MF8	M2		
MF9	L2		
MF10	L2		
MF11	L2		
MF12	L2		
RB1	C12		
RB2	B8		
RB3	B14		
RB4	C15		
RB5	C15		
RB6	C13		
RB7	C13		
RB8	R2		
RB9	B7		
RB10	B5		
RB11	B4		
RB12	B2		
RB13	M2		
RB14	L3		
RB15	B6		

IC No. on this board shows its address.

A Side

DVR-2000	DVR-2100
J ; S/N 10201 and higher	J ; S/N 10801 and higher
UC ; S/N 10401 and higher	UC ; S/N 11101 and higher
EK ; S/N 10801 and higher	EK ; S/N 11101 and higher

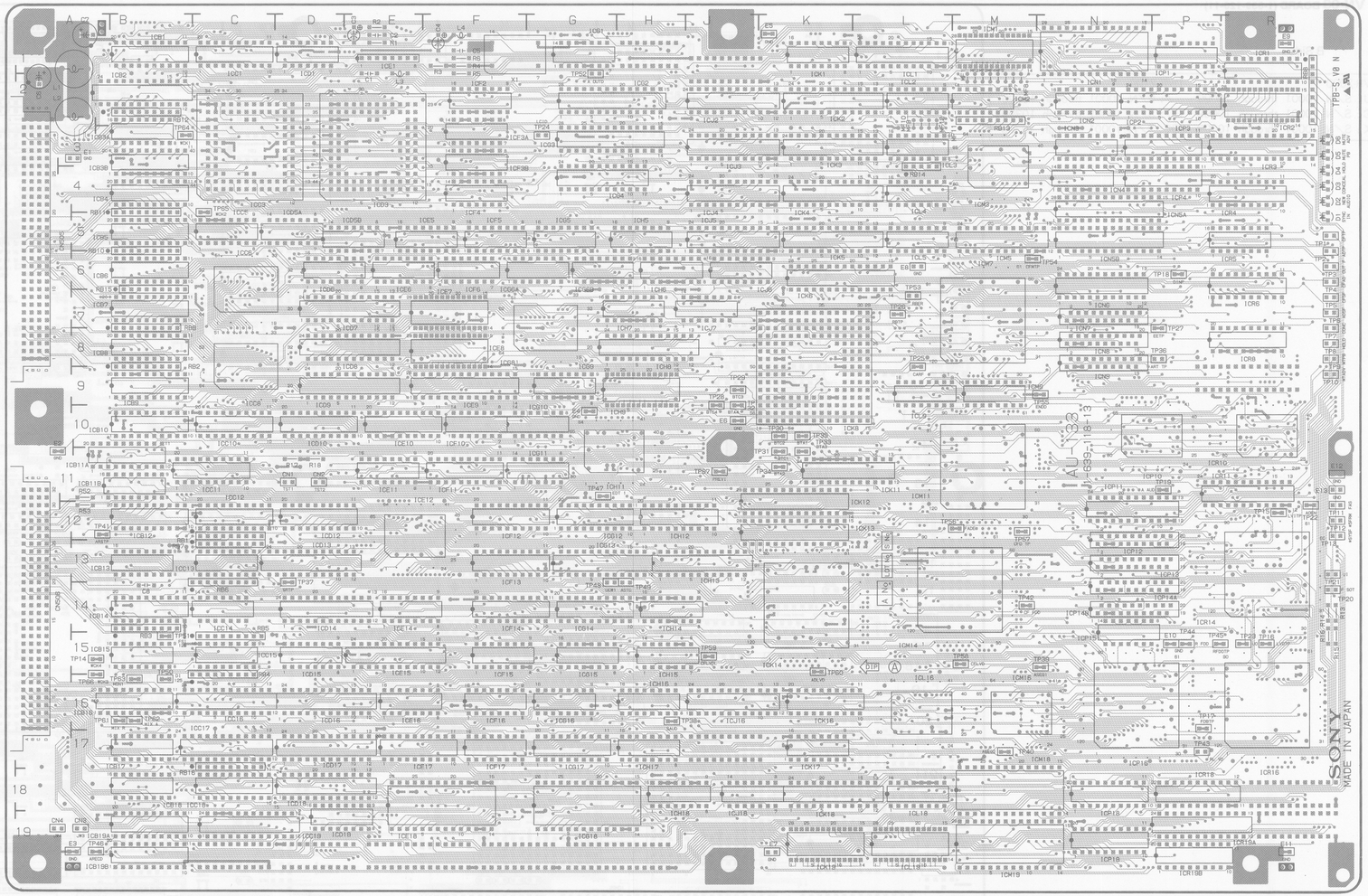

1-639-118-13 A SIDE

CARD RACK **AU-133 BOARD**

AU-133 BOARD (1-639-118-13)

B Side

DVR-2000	DVR-2100
J ; S/N 10201 and higher	J ; S/N 10801 and higher
UC ; S/N 10401 and higher	UC ; S/N 11101 and higher
EK ; S/N 10801 and higher	EK ; S/N 11101 and higher

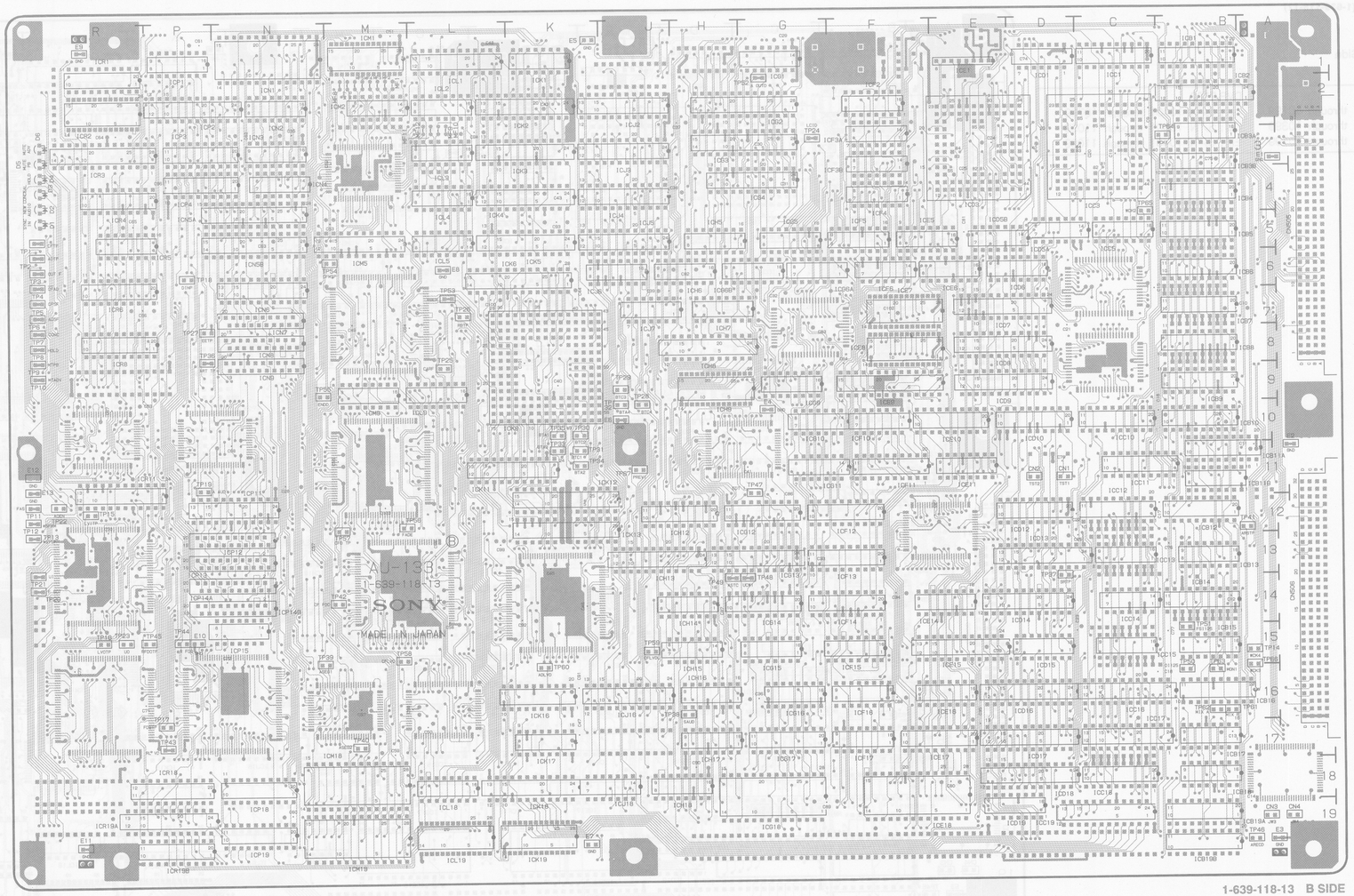

1-639-118-13 B SIDE

AU-133 (1-639-118-13)

DVR-2000
DVR-2100

CN1	D11	RB16	C17
CN2	D11		
CN3	A19	TP1	R5
CN4	A19	TP2	R5
CN505	A2	TP3	R6
CN506	A11	TP4	R6
		TP5	R7
D1	R5	TP6	R7
D2	R4	TP7	R7
D3	R4	TP8	R8
D4	R4	TP9	R8
D5	R3	TP10	R9
D6	R3	TP11	R12
		TP12	R12
E1	A3	TP13	R12
E2	A11	TP15	R12
E3	A19	TP16	R15
E4	G10	TP17	P16
E5	K1	TP18	P6
E6	J10	TP19	P11
E7	K19	TP24	G3
E8	L6	TP37	D13
E9	R1	TP38	H16
E10	P15	TP42	M14
E11	R19	TP43	P17
E12	R11	TP44	P15
E13	R11	TP45	P15
		TP53	L7
MF1	M2	TP54	M6
MF2	M2	TP58	M15
MF3	M2	TP60	K15
MF4	M2		
MF5	M2	X1	F1
MF6	M2		
MF7	M2		
MF8	M2		
MF9	L2		
MF10	L2		
MF11	L2		
MF12	L2		
RB1	C12		
RB2	B8		
RB3	B14		
RB4	C15		
RB5	C15		
RB6	C13		
RB7	C13		
RB8	R2		
RB9	B7		
RB10	B5		
RB11	B4		
RB12	B2		
RB13	M2		
RB14	L3		
RB15	B6		

IC No. on this board shows its address.

20-13 (c)

CARD RACK AU-133 BOARD AU-133 BOARD CARD RACK

AU-133 BOARD (1-639-118-12)

AU-133 (1-639-118-12)

DVR-2000
DVR-2100

CN505	A5	TP17	P16
CN506	A14	TP18	P6
		TP19	P11
D1	R3	TP20	R14
D2	R3	TP21	R13
D3	R2	TP22	R12
D4	R2	TP23	R11
D5	R2	TP24	R14
D6	R2	TP25	L8
		TP26	L7
E1	A3	TP27	P8
E2	A10	TP28	J9
E3	A19	TP29	J9
E4	G10	TP30	K10
E5	K1	TP31	K11
E6	J10	TP32	J10
E7	K19	TP33	K11
E8	L9	TP34	K11
E9	R2	TP35	K10
E10	P15	TP36	P8
E11	R19	TP37	D14
E12	R11	TP38	J16
E13	R11	TP39	M15
		TP40	M17
RB1	C12	TP41	A12
RB2	C9	TP42	M14
RB3	B15	TP43	P17
RB4	C16	TP44	P15
RB5	C14	TP45	P15
RB6	C14	TP46	A19
RB7	C13	TP47	G11
RB8	R1	TP48	G14
RB9	B8	TP49	H14
RB10	A5	TP50	B15
RB11	A4	TP51	B15
RB12	B2	TP52	G2
RB13	M3	TP53	L6
RB14	L4	TP54	L9
RB15	A6	TP55	M9
		TP56	L12
TP1	R4	TP57	M13
TP2	R4	TP58	M15
TP3	R5	TP59	J15
TP4	R5	TP60	K15
TP5	R5	TP61	A16
TP6	R6	TP62	B16
TP7	R6	TP63	B16
TP8	R7	TP64	B3
TP9	R7	TP65	C4
TP10	R8	TP66	A16
TP11	R8	TP67	J11
TP12	R8		
TP13	R9	X1	F2
TP14	A15		
TP15	R12		
TP16	R15		

IC No. on this board shows its address.

A Side

DVR-2000	DVR-2100
J ; S/N 10101 through 10199	J ; S/N 10401 through 10799
UC ; S/N 10101 through 10399	UC ; S/N 10401 through 11099
EK ; S/N 10101 through 10799	EK ; S/N 10401 through 11099

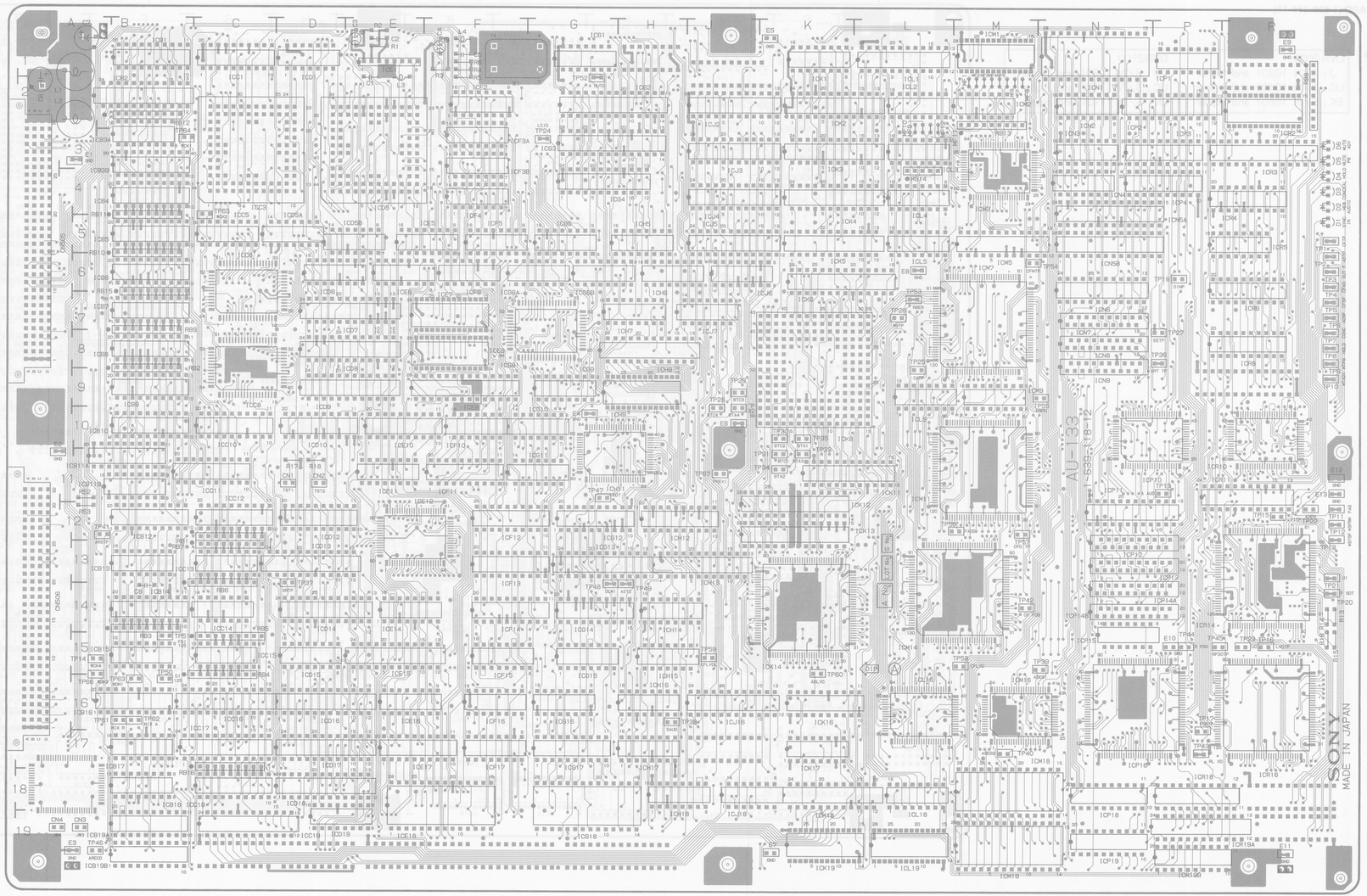

AU-133 BOARD CARD RACK

CARD RACK **AU-133 BOARD**

AU-133 BOARD (1-639-118-12)

B Side

DVR-2000	DVR-2100
J ; S/N 10101 through 10199	J ; S/N 10401 through 10799
UC ; S/N 10101 through 10399	UC ; S/N 10401 through 11099
EK ; S/N 10101 through 10799	EK ; S/N 10401 through 11099

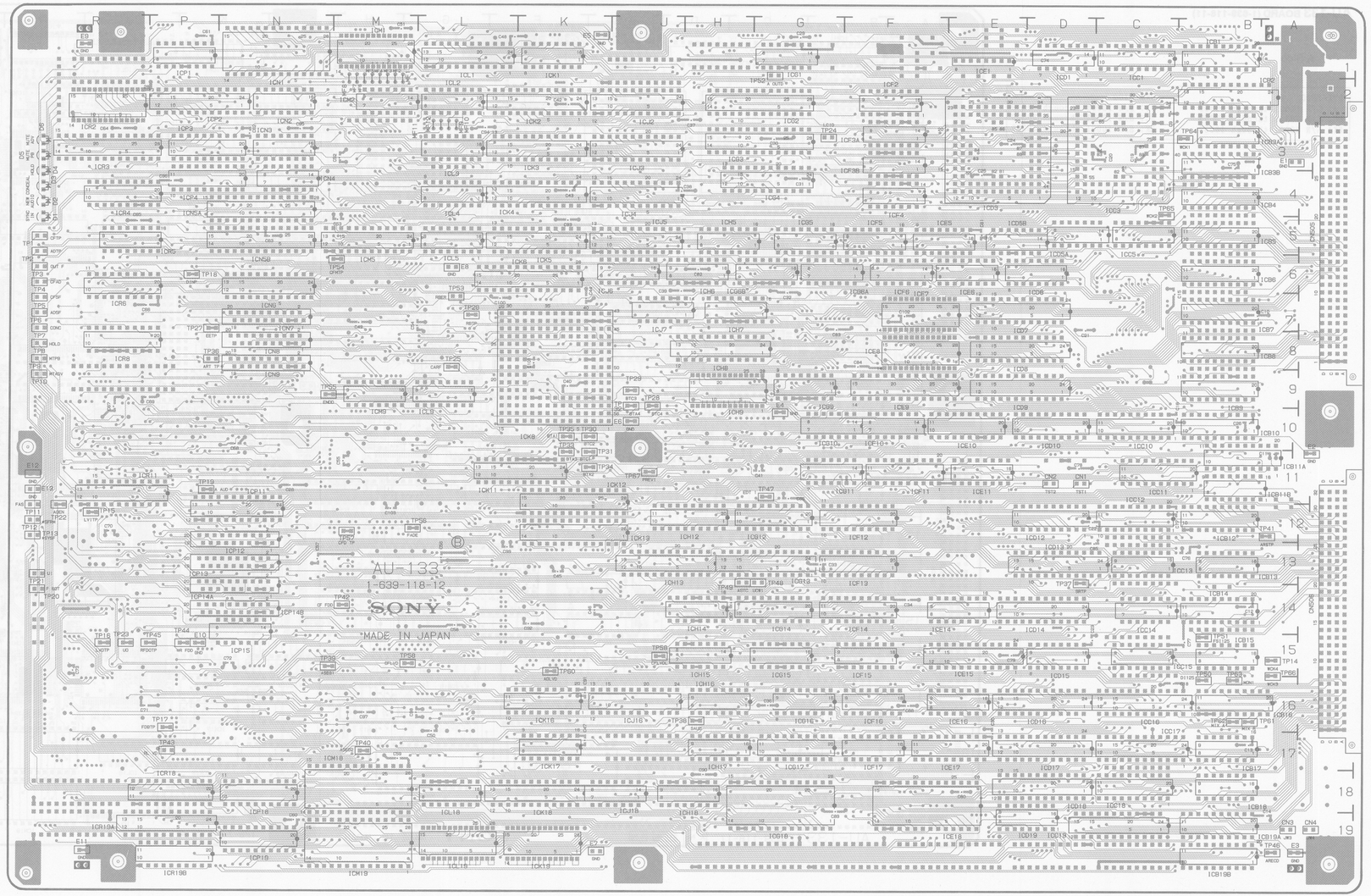

1-639-118-12 B SIDE

AU-133 (1-639-118-12)

DVR-2000
DVR-2100

CN505	A5	TP17	P16
CN506	A14	TP18	P6
		TP19	P11
D1	R3	TP20	R14
D2	R3	TP21	R13
D3	R2	TP22	R12
D4	R2	TP23	R11
D5	R2	TP24	R14
D6	R2	TP25	L8
		TP26	L7
E1	A3	TP27	P8
E2	A10	TP28	J9
E3	A19	TP29	J9
E4	G10	TP30	K10
E5	K1	TP31	K11
E6	J10	TP32	J10
E7	K19	TP33	K11
E8	L9	TP34	K11
E9	R2	TP35	K10
E10	P15	TP36	P8
E11	R19	TP37	D14
E12	R11	TP38	J16
E13	R11	TP39	M15
		TP40	M17
RB1	C12	TP41	A12
RB2	C9	TP42	M14
RB3	B15	TP43	P17
RB4	C16	TP44	P15
RB5	C14	TP45	P15
RB6	C14	TP46	A19
RB7	C13	TP47	G11
RB8	R1	TP48	G14
RB9	B8	TP49	H14
RB10	A5	TP50	B15
RB11	A4	TP51	B15
RB12	B2	TP52	G2
RB13	M3	TP53	L6
RB14	L4	TP54	L9
RB15	A6	TP55	M9
		TP56	L12
TP1	R4	TP57	M13
TP2	R4	TP58	M15
TP3	R5	TP59	J15
TP4	R5	TP60	K15
TP5	R5	TP61	A16
TP6	R6	TP62	B16
TP7	R6	TP63	B16
TP8	R7	TP64	B3
TP9	R7	TP65	C4
TP10	R8	TP66	A16
TP11	R8	TP67	J11
TP12	R8		
TP13	R9	X1	F2
TP14	A15		
TP15	R12		
TP16	R15		

IC No. on this board shows its address.

20-13 (b)

CARD RACK AU-133 BOARD AU-133 BOARD CARD RACK

AU-133 (1-639-118-11)

DVR-2000
DVR-2100

CN505	A5	TP15	R12	X1	F2
CN506	A14	TP16	R15		
		TP17	P16		
D1	R3	TP18	P6		
D2	R3	TP19	P11		
D3	R2	TP20	R14		
D4	R2	TP21	R13		
D5	R2	TP22	R12		
D6	R2	TP23	R11		
		TP24	R14		
E1	A3	TP25	L8		
E2	A10	TP26	L7		
E3	A19	TP27	P8		
E4	G10	TP28	J9		
E5	K1	TP29	J9		
E6	J10	TP30	K10		
E7	K19	TP31	K11		
E8	L9	TP32	J10		
E9	R2	TP33	K11		
E10	P15	TP34	K11		
E11	R19	TP35	K10		
E12	R11	TP36	P8		
E13	R11	TP37	D14		
		TP38	J16		
RB1	C12	TP39	M15		
RB2	C9	TP40	M17		
RB3	B15	TP41	A12		
RB4	C16	TP42	M14		
RB5	C14	TP43	P17		
RB6	C14	TP44	P15		
RB7	C13	TP45	P15		
RB8	R1	TP46	A19		
RB9	B8	TP47	G11		
RB10	A5	TP48	G14		
RB11	A4	TP49	H14		
RB12	B2	TP50	B15		
RB13	M3	TP51	B15		
RB14	L4	TP52	G2		
RB15	A6	TP53	L6		
		TP54	L9		
TP1	R4	TP55	M9		
TP2	R4	TP56	L12		
TP3	R5	TP57	M13		
TP4	R5	TP58	M15		
TP5	R5	TP59	J15		
TP6	R6	TP60	K15		
TP7	R6	TP61	A16		
TP8	R7	TP62	B16		
TP9	R7	TP63	B16		
TP10	R8	TP64	B3		
TP11	R8	TP65	C4		
TP12	R8	TP66	A16		
TP13	R9	TP67	J11		
TP14	A15				

IC No. on this board shows its address.

AU-133 BOARD (1-639-118-11)

A Side

DVR-2000	DVR-2100
J: S/N 10001 through 10099	J: S/N 10001 through 10399
UC: S/N 10001 through 10099	UC: S/N 10001 through 10399
EK: S/N 10001 through 10099	EK: S/N 10001 through 10399

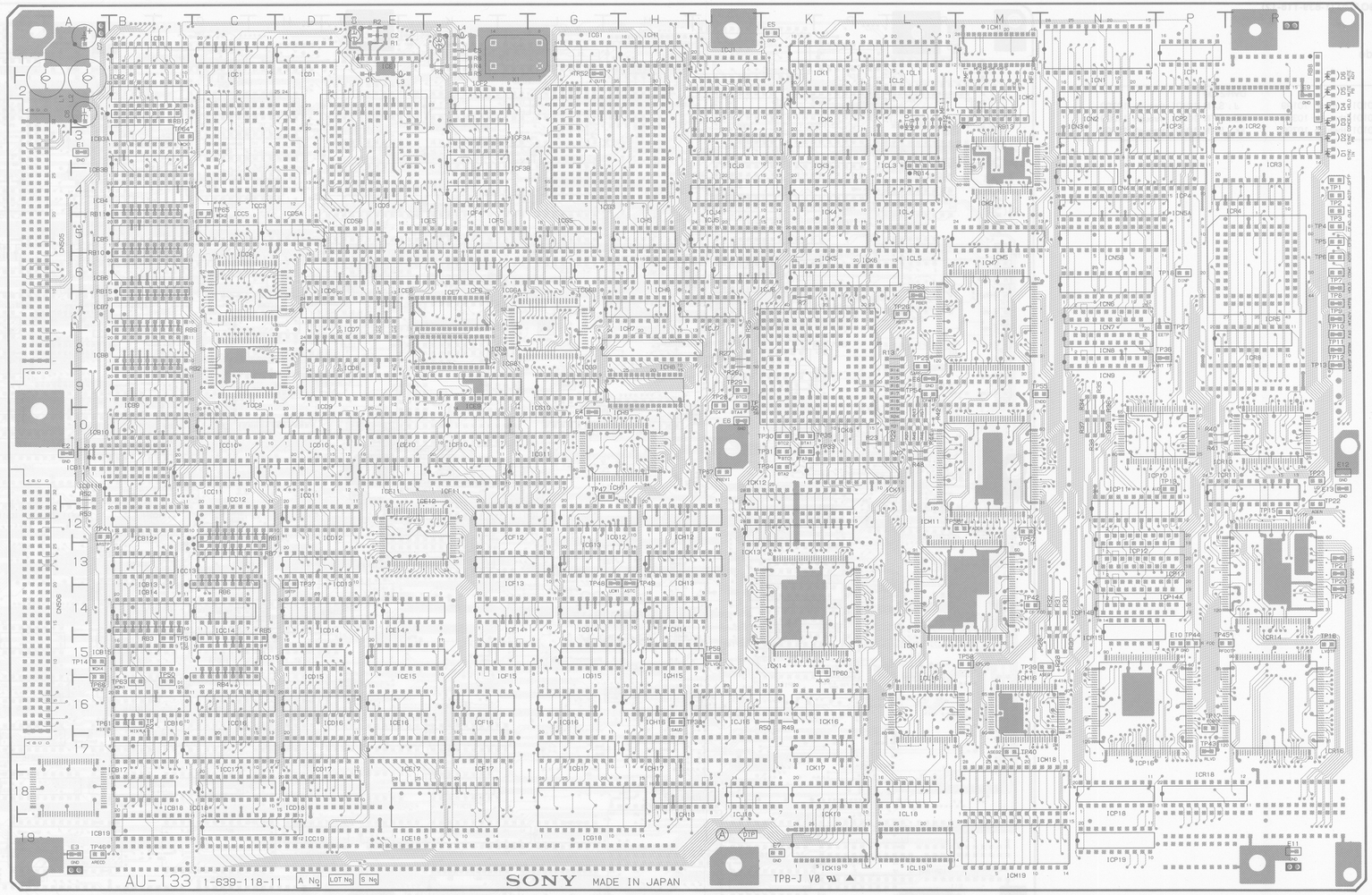

1-639-118-11 A SIDE

20-12 (a)

AU-133 BOARD (1-639-118-11)

B Side

DVR-2000	DVR-2100
J: S/N 10001 through 10099	J: S/N 10001 through 10399
UC: S/N 10001 through 10099	UC: S/N 10001 through 10399
EK: S/N 10001 through 10099	EK: S/N 10001 through 10399

CARD RACK **AU-133 BOARD** **AU-133 BOARD** CARD RACK

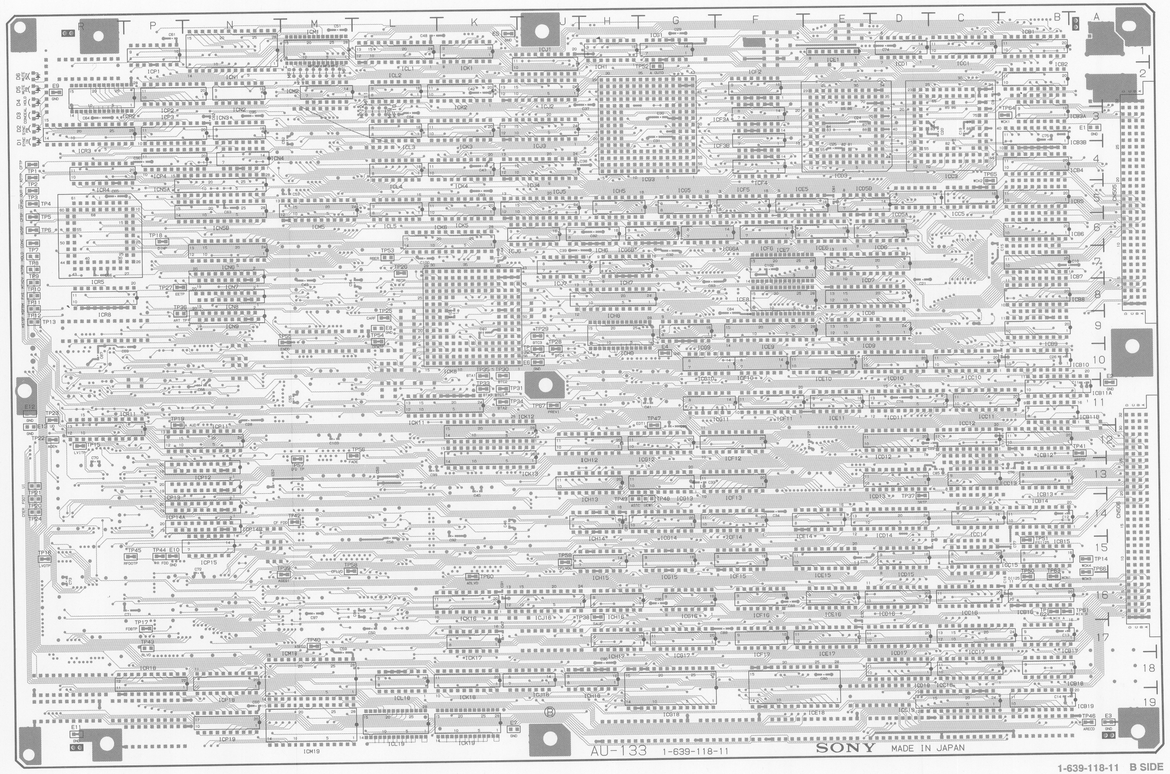

1-639-118-11 B SIDE

AU-133 (1-639-118-11)

DVR-2000
DVR-2100

CN505	A5	TP15	R12	X1	F2
CN506	A14	TP16	R15		
		TP17	P16		
D1	R3	TP18	P6		
D2	R3	TP19	P11		
D3	R2	TP20	R14		
D4	R2	TP21	R13		
D5	R2	TP22	R12		
D6	R2	TP23	R11		
		TP24	R14		
E1	A3	TP25	L8		
E2	A10	TP26	L7		
E3	A19	TP27	P8		
E4	G10	TP28	J9		
E5	K1	TP29	J9		
E6	J10	TP30	K10		
E7	K19	TP31	K11		
E8	L9	TP32	J10		
E9	R2	TP33	K11		
E10	P15	TP34	K11		
E11	R19	TP35	K10		
E12	R11	TP36	P8		
E13	R11	TP37	D14		
		TP38	J16		
RB1	C12	TP39	M15		
RB2	C9	TP40	M17		
RB3	B15	TP41	A12		
RB4	C16	TP42	M14		
RB5	C14	TP43	P17		
RB6	C14	TP44	P15		
RB7	C13	TP45	P15		
RB8	R1	TP46	A19		
RB9	B8	TP47	G11		
RB10	A5	TP48	G14		
RB11	A4	TP49	H14		
RB12	B2	TP50	B15		
RB13	M3	TP51	B15		
RB14	L4	TP52	G2		
RB15	A6	TP53	L6		
		TP54	L9		
TP1	R4	TP55	M9		
TP2	R4	TP56	L12		
TP3	R5	TP57	M13		
TP4	R5	TP58	M15		
TP5	R5	TP59	J15		
TP6	R6	TP60	K15		
TP7	R6	TP61	A16		
TP8	R7	TP62	B16		
TP9	R7	TP63	B16		
TP10	R8	TP64	B3		
TP11	R8	TP65	C4		
TP12	R8	TP66	A16		
TP13	R9	TP67	J11		
TP14	A15				

IC No. on this board shows its address.

AE-12 BOARD (1-639-123-13)

DVR-2000	DVR-2100
J ; S/N 10201 and higher	J ; S/N 10801 and higher
UC ; S/N 10301 and higher	UC ; S/N 11101 and higher
EK ; S/N 10601 and higher	EK ; S/N 11101 and higher

A Side

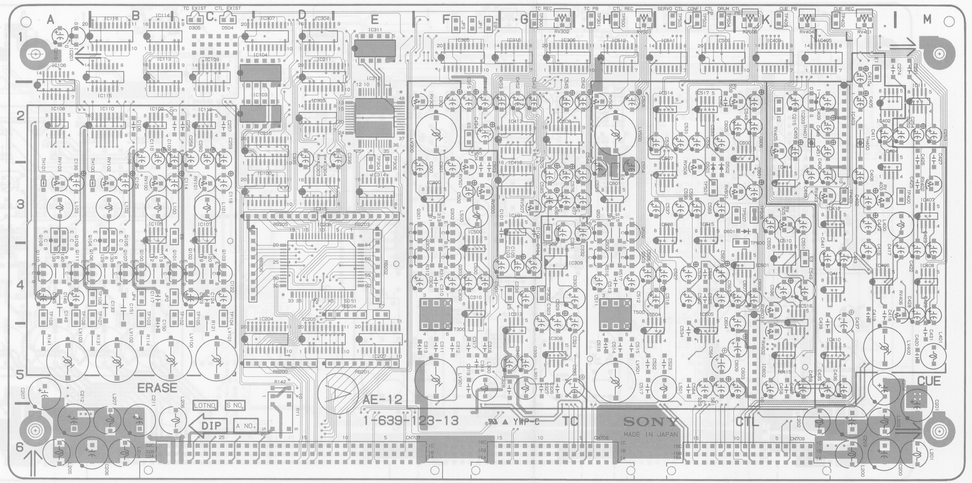

1-639-123-13 A SIDE

B Side

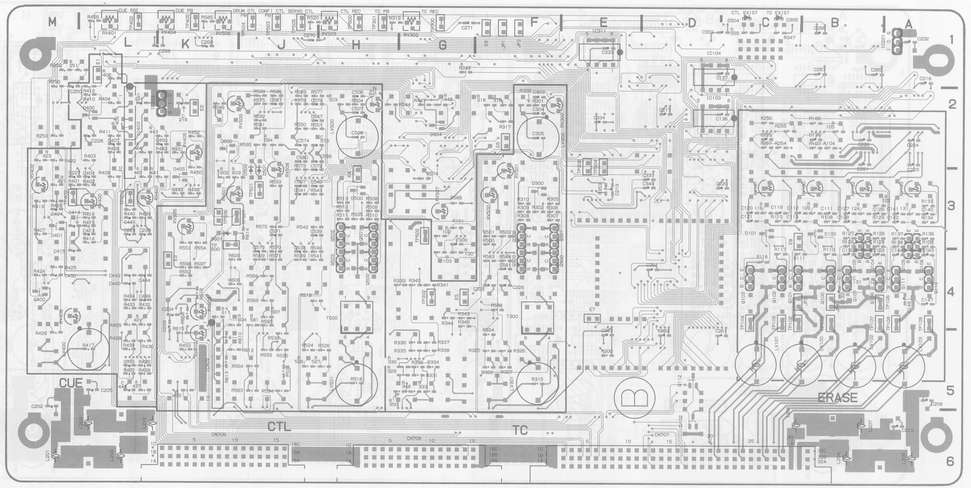

1-639-123-13 B SIDE

AE-12 (1-639-123-13)

DVR-2000
DVR-2100

CN707	D6	IC211	D1	LV101	C5	RV503	H1
CN708	G6	IC300	F3	LV102	B5	RV505	K3
CN709	K6	IC303	D2	LV103	A5	RV506	K1
		IC304	D1	LV300	F2	RV507	G3
D100	*B3	IC305	F1	LV301	F5	RV508	J3
D101	*C3	IC306	G1	LV400	L5	RV509	K2
D102	*D6	IC307	D1	LV500	H2	RV601	K3
D300	*F3	IC308	G5	LV501	H5	RV602	K5
D303	D2	IC309	G4			RV603	K4
D304	D2	IC310	F4	Q100	B4		
D305	C1	IC311	E1	Q101	C4	RY1	D6
D400	*L2	IC312	E2	Q102	C4		
D401	*M3	IC313	G5	Q103	C4	T300	F4
D404	*G2	IC314	E3	Q104	B3	T500	H4
D405	*K3	IC315	D3	Q105	B3		
D500	*H3	IC316	G1	Q106	B4	TH100	B3
D501	J3	IC402	L2	Q107	B4	TH101	A3
D502	J3	IC403	L2	Q108	A3	TH400	L2
D504	C1	IC404	L3	Q109	A3	TH401	K2
D600	*K2	IC405	L1	Q110	A4		
D601	K3	IC406	L4	Q111	A4	TP102	C4
		IC407	M3	Q112	*D5	TP103	B4
E1	L1	IC408	M4	Q300	F4	TP104	C4
E2	K2	IC409	K1	Q301	F3	TP105	C4
E3	K4	IC410	L5	Q302	F3	TP106	B4
E4	H3	IC411	L4	Q303	F4	TP107	B4
E5	G4	IC412	L3	Q400	*M4	TP108	A4
E6	F2	IC413	G2	Q500	H4	TP109	A4
E7	E4	IC414	K3	Q501	H3	TP300	G1
E8	C3	IC415	K5	Q502	H3	TP301	H1
E9	F1	IC416	G3	Q503	H4	TP302	G4
		IC500	F4			TP400	M3
IC100	D3	IC501	H3	RB200	D5	TP402	L1
IC101	G3	IC504	H5	RB201	E5	TP403	L3
IC102	B2	IC505	J5	RB202	E4	TP405	K1
IC103	D2	IC506	J3	RB203	E3	TP500	H1
IC104	D1	IC507	J3	RB204	E4	TP501	J3
IC105	B3	IC508	G2	RB205	D3	TP502	G3
IC106	A2	IC509	J1	RB206	D4	TP503	J1
IC107	C3	IC510	K4			TP504	J1
IC108	A2	IC511	J1	RV100	B3	TP505	J1
IC109	C1	IC512	H1	RV101	C3	TP506	K3
IC110	B2	IC514	J2	RV102	B3	TP507	K3
IC111	M2	IC515	J3	RV103	A3	TP600	K4
IC112	C2	IC516	K5	RV300	F2		
IC113	B1	IC517	J2	RV302	G1	* : B SIDE	
IC114	B1	IC600	K2	RV400	L3		
IC115	B1	IC601	K4	RV401	L1		
IC116	B1	IC602	K5	RV402	M3		
IC201	A1			RV403	L3		
IC203	K2	JP1	F1	RV404	K1		
IC204	D5	JP2	C4	RV405	K2		
IC205	D5	JP3	F1	RV406	M4		
IC207	E5	JP4	B4	RV500	F3		
IC208	D4			RV501	F3		
IC210	D2	LV100	C5	RV502	H2		

CARD RACK **AE-12 BOARD** **AE-12 BOARD** CARD RACK

20-15 (b)

AE-12 BOARD (1-639-123-12)

DVR-2000	DVR-2100
J : S/N 10101 through 10199	J : S/N 10401 through 10999
UC : S/N 10101 through 10299	UC : S/N 10401 through 11099
EK : S/N 10101 through 10599	EK : S/N 10401 through 11099

AE-12 (1-639-123-12)

DVR-2000
DVR-2100

CN707	C4	IC210	C2	LV101	B3	RV503	F1
CN708	E4	IC211	C1	LV102	A3	RV505	G2
CN709	G4	IC300	D2	LV103	A3	RV506	G1
		IC303	C1	LV300	D2	RV507	E2
D100	*B2	IC304	C1	LV301	D4	RV508	F2
D101	*B2	IC305	D1	LV400	H3	RV509	G1
D102	*C4	IC306	E1	LV500	F2	RV510	F4
D300	*D2	IC307	C1			RV601	G2
D303	C2	IC308	E3	Q100	B3		
D304	C2	IC309	E3	Q101	B3	RY1	C4
D305	B1	IC310	D3	Q102	B3		
D400	*H1	IC311	D1	Q103	B3	T300	D3
D401	*H2	IC312	C1	Q104	A2	T500	F3
D404	*E1	IC313	E3	Q105	A2		
D405	*G2	IC314	C2	Q106	A3	TH100	A2
D500	*F2	IC315	C2	Q107	A3	TH101	A2
D501	G2	IC316	E1	Q108	A2	TH400	H2
D502	G2	IC402	H1	Q109	A2	TH401	G2
D504	B1	IC403	H1	Q110	A3		
D600	*G2	IC404	H2	Q111	A3	TP102	B3
D601	G2	IC405	G1	Q112	*C4	TP103	B3
		IC406	H3	Q300	D3	TP104	B3
E1	H1	IC407	H2	Q301	D2	TP105	B3
E2	G1	IC408	H3	Q302	D2	TP106	A3
E3	G3	IC409	G1	Q303	D3	TP107	A3
E4	F2	IC410	H3	Q308	*E3	TP108	A3
E5	E3	IC411	H3	Q400	*H3	TP109	A3
E6	D2	IC412	H2	Q500	F3	TP300	E1
E7	D3	IC413	E2	Q501	F2	TP301	E1
E8	B2	IC414	G2	Q502	F2	TP302	E3
		IC415	G3	Q503	F3	TP304	D2
IC100	C2	IC416	E2			TP306	D2
IC101	E2	IC500	D2	RB200	C3	TP400	H2
IC102	B1	IC501	F2	RB201	C3	TP402	H1
IC103	C1	IC504	F3	RB202	D3	TP403	H2
IC104	C1	IC505	F3	RB203	C2	TP405	G1
IC105	B2	IC506	F2	RB204	C3	TP500	F1
IC106	A1	IC507	F2	RB205	C2	TP501	G2
IC107	B2	IC508	E2	RB206	C3	TP502	E2
IC108	A1	IC509	G1			TP503	F1
IC109	B1	IC510	G3	RV100	B2	TP504	G1
IC110	A1	IC511	F1	RV101	B2	TP505	F1
IC111	H1	IC512	F1	RV102	A2	TP600	G2
IC112	B1	IC513		RV103	A2		
IC113	B1	IC514	F1	RV300	D1		
IC114	B1	IC515	F2	RV302	E1		
IC115	A1	IC516	G3	RV400	H2		
IC116	A1	IC517	F1	RV401	H1		
IC200	E4	IC600	G2	RV402	H2		
IC201	A1	IC601	G3	RV403	H2		
IC202	E4	IC602	G3	RV404	G1		
IC203	G1			RV405	G2		
IC204	C3	JP1	G2	RV406	H3		
IC205	C3	JP2	G2	RV500	D2		
IC207	D3			RV501	D2		
IC208	C3	LV100	B3	RV502	F1		

* : B SIDE

A Side

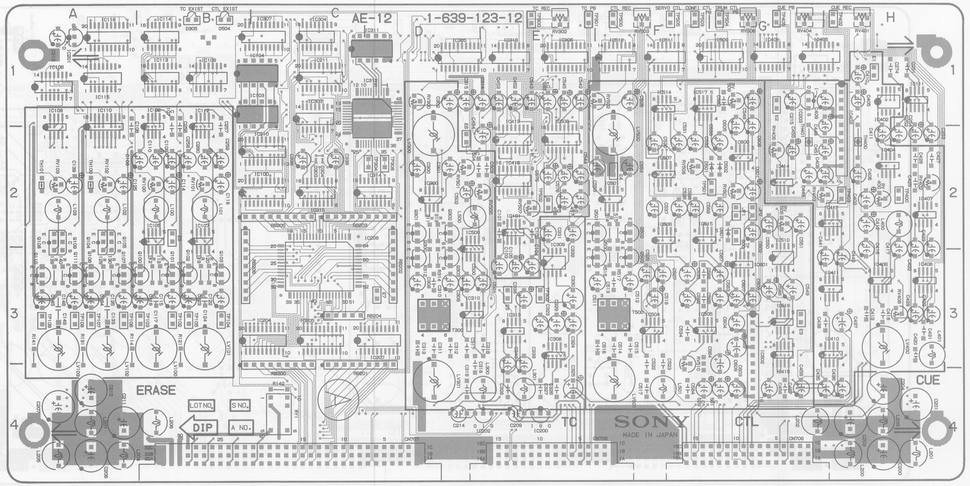

1-639-123-12 A SIDE

B Side

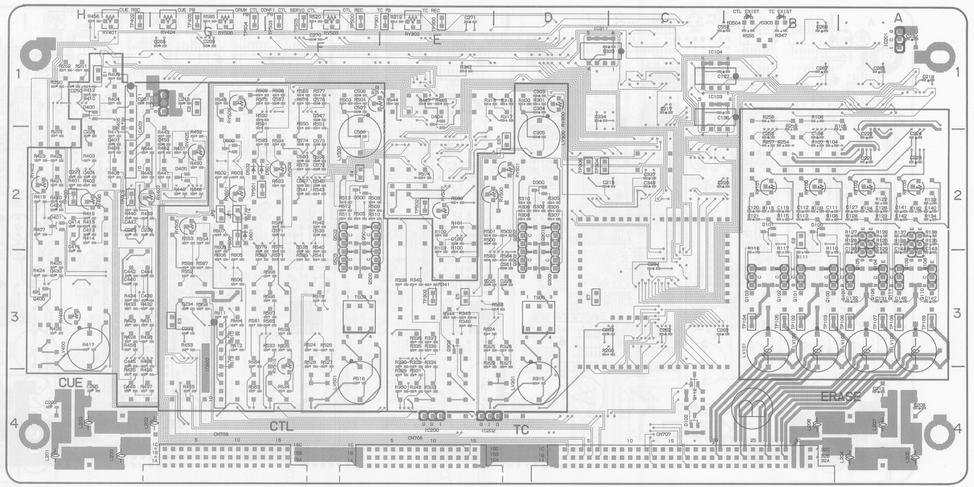

1-639-123-12 B SIDE

CARD RACK **AE-12 BOARD** **AE-12 BOARD** CARD RACK

20-14 (a)

AE-12 BOARD (1-639-123-11)

DVR-2000	DVR-2100
J : S/N 10001 through 10099	J : S/N 10001 through 10399
UC : S/N 10001 through 10099	UC : S/N 10001 through 10399
EK : S/N 10001 through 10099	EK : S/N 10001 through 10399

A Side

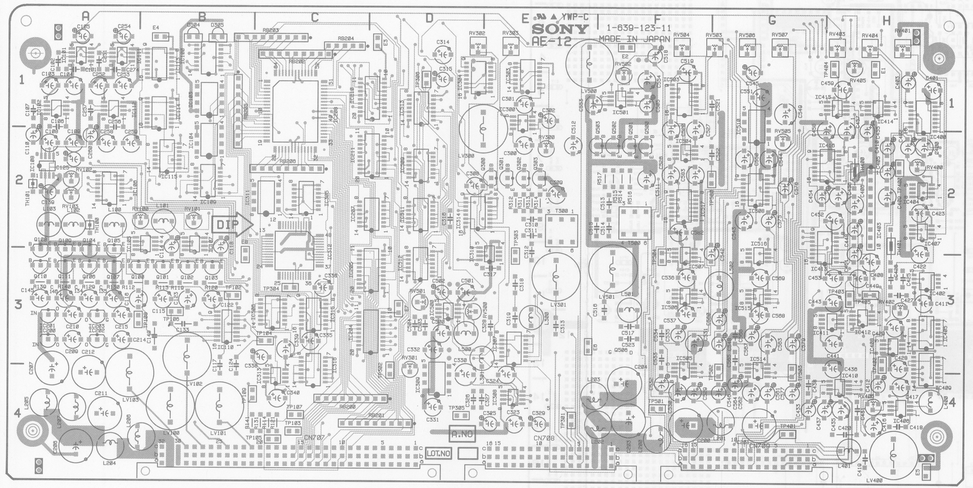

1-639-123-11 A SIDE

B Side

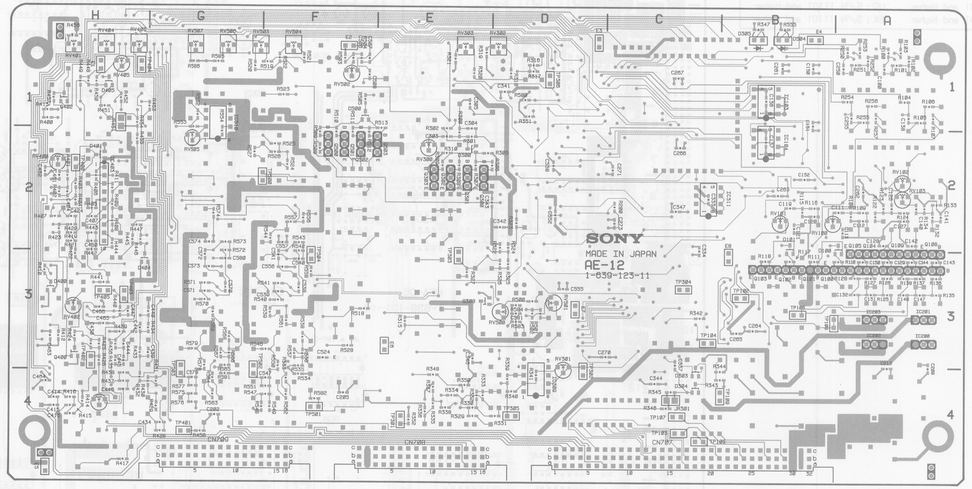

1-639-123-11 B SIDE

DUS-481 BOARD (1-641-736-11)

A Side

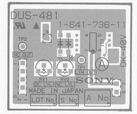

1-641-736-11 A SIDE

B Side

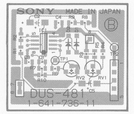

1-641-736-11 B SIDE

DUS-481 CARD RACK AE-12 BOARD AE-12 BOARD CARD RACK DUS-481

AE-12 (1-639-123-11)

DVR-2000
DVR-2100

CN707	C4	IC304	D1	LV500	E1	RV504	F1
CN708	E4	IC305	C2	LV501	F3	RV505	G2
CN709	G4	IC306	C3			RV506	G1
		IC307	E3	Q100	A3	RV507	G1
D100	*B2	IC308	E4	Q101	B3		
D101	*B2	IC309	D4	Q102	B3	TH100	A2
D300	*E2	IC310	D3	Q103	B3	TH101	A2
D303	*C4	IC311	B2	Q104	A2	TH400	H2
D304	*C4	IC312	C3	Q105	A2	TH401	H2
D305	B1	IC313	C4	Q106	A3		
D400	*H3	IC314	D2	Q107	A3	TP102	B3
D401	*H2	IC315	C3	Q108	A2	TP103	C4
D404	*H3	IC316	C4	Q109	A2	TP104	C3
D405	*H1	IC400	H2	Q110	A3	TP105	C4
D500	*F1	IC402	H3	Q111	A3	TP106	B3
D504	B1	IC403	H2	Q300	E2	TP107	C4
		IC404	H2	Q301	E2	TP108	B3
E1	H1	IC405	H3	Q302	E2	TP109	B4
E2	F1	IC406	H4	Q303	E2	TP301	E4
E3	D1	IC407	H2	Q308	*E3	TP302	D4
E4	B1	IC408	H3	Q400	*H3	TP303	E2
E5	H4	IC409	H4	Q402	*H1	TP304	C3
E6	E3	IC410	H4	Q500	F2	TP305	D4
E7	D3	IC411	G3	Q501	F2	TP306	D1
E8	B2	IC412	H3	Q502	F2	TP400	H2
		IC413	G3	Q503	F2	TP401	G4
IC100	B1	IC414	H1			TP402	H3
IC101	A1	IC415	H1	RB200	C4	TP403	H3
IC102	A1	IC416	H2	RB201	D4	TP404	H1
IC103	B1	IC500	D3	RB202	C1	TP405	H3
IC104	B2	IC501	F1	RB203	C1	TP500	F2
IC105	A2	IC503	F1	RB204	C1	TP501	F4
IC106	A2	IC504	F2	RB205	B1	TP502	G4
IC107	B2	IC505	F3	RB206	C2	TP503	G4
IC108	A2	IC506	F3			TP504	F3
IC109	B2	IC507	F3	RV100	A2		
IC110	B3	IC508	G2	RV101	B2	T300	E2
IC111	A1	IC509	D2	RV102	A2	T500	F2
IC112	A1	IC510	G1	RV103	A2		
IC113	B1	IC511	D2	RV300	E2	*: B SIDE	
IC114	B1	IC512	D3	RV301	D3		
IC115	B2	IC513	D1	RV302	D1		
IC200	A3	IC514	G3	RV303	E1		
IC201	A3	IC515	G3	RV400	H2		
IC202	A3	IC516	G2	RV401	H1		
IC203	A3	IC517	F2	RV402	H3		
IC204	C3			RV403	H1		
IC205	C3	LV100	B4	RV404	H1		
IC207	C2	LV101	B4	RV405	H1		
IC208	C1	LV102	B4	RV406	H4		
IC210	C1	LV103	A4	RV500	E3		
IC211	C2	LV300	D2	RV501	D3		
IC300	E1	LV301	E3	RV502	F1		
IC303	E1	LV400	H4	RV503	G1		

CARD RACK **MOA-05 BOARD** **MOA-05 BOARD** CARD RACK

MOA-05 BOARD (1-639-121-13)

MOA-05 (1-639-121-13)

DVR-2000
DVR-2100

CN511	A6	Q3	D9
CN512	A16	Q4	B8
		Q5	B8
D1	G2	Q6	A5
D2	G4	Q7	F8
D3	G3	Q8	F6
D4	G2	Q10	P8
D5	M2	Q11	P8
D6	M4	Q12	S9
D7	B4	Q13	S8
D8	F8	Q14	M9
D9	F6	Q15	M8
D10	R6	Q17	N9
		Q18	N8
E1	H4	Q19	R6
E3	E7		
E5	B10	RV1	G4
E9	P5	RV2	J5
E13	P6	RV6	B9
E14	T10	RV8	N5
E16	L10	RV9	C3
E17	T5	RV11	D4
E18	N10	RV15	R9
E19	M4	RV17	R9
E20	A21	RV19	L7
E21	B14	RV21	M7
E22	G16		
E23	G22	RY1	G2
E24	M19	RY2	B5
E25	N16	RY3	F9
E26	D15	RY4	F7
E27	N22	RY5	R6
E28	T19		
E50	E5	SL1	G1
		SL2	G1
FL1	M5		
FL3	E2	TP3	T11
FL4	P10	TP4	L2
FL5	R10	TP5	A10
FL8	D5	TP6	T7
		TP7	T9
MF1	J21	TP9	T10
MF2	J21	TP13	R7
MF3	J21	TP15	R7
MF4	J20	TP17	T6
MF5	J20	TP19	T4
MF6	J20	TP37	E15
MF7	J20	TP38	T3
MF8	J20	TP39	T14
MF9	J22	TP40	T22
MF10	J22	TP41	T21
MF11	J21	TP42	T20
MF12	J21	TP43	T18
		TP44	T17
Q1	G2	TP45	T16
Q2	J2		

IC No. on this board shows its address.

A Side

DVR-2000	DVR-2100
J ; S/N 10201 and higher	J ; S/N 10801 and higher
UC ; S/N 10301 and higher	UC ; S/N 11101 and higher
EK ; S/N 10601 and higher	EK ; S/N 11101 and higher

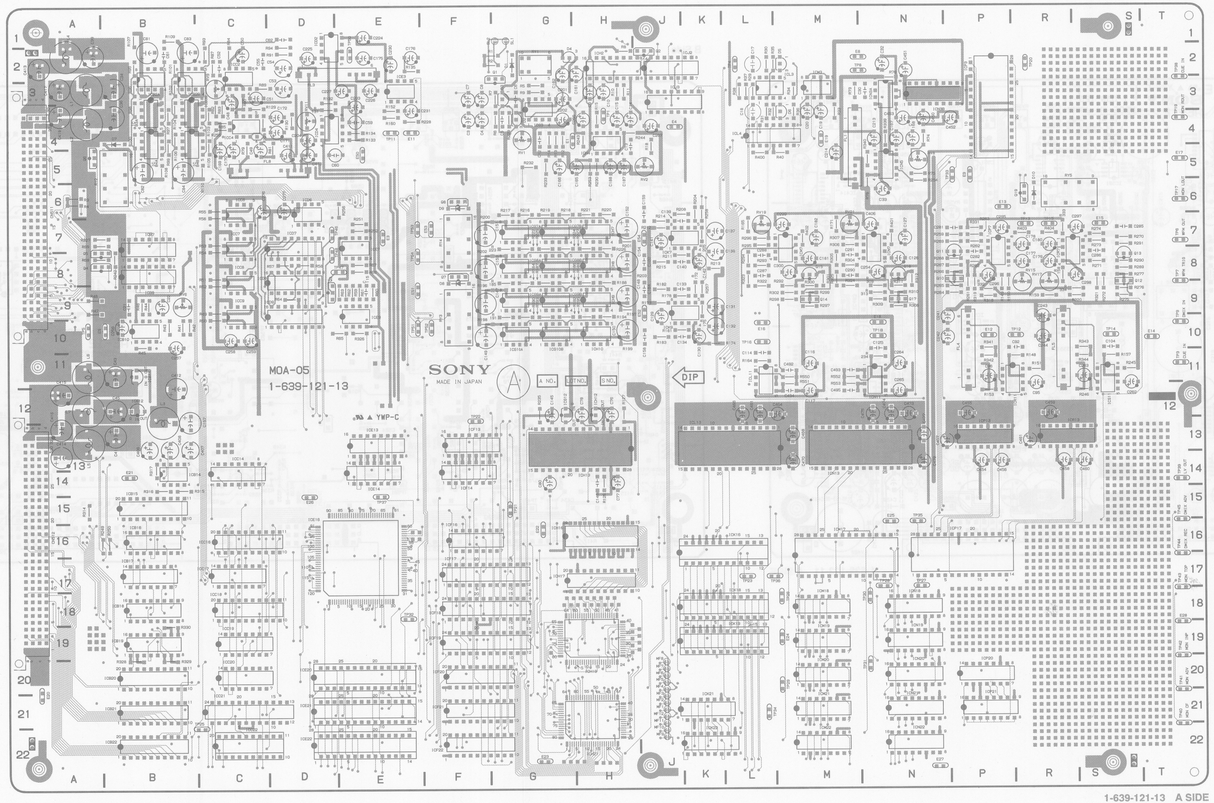

1-639-121-13 A SIDE

20-16 (c)

MOA-05 BOARD CARD RACK

CARD RACK **MOA-05 BOARD**

MOA-05 BOARD (1-639-121-13)

B Side

DVR-2000	DVR-2100
J ; S/N 10201 and higher	J ; S/N 11001 and higher
UC ; S/N 10301 and higher	UC ; S/N 11101 and higher
EK ; S/N 10601 and higher	EK ; S/N 11101 and higher

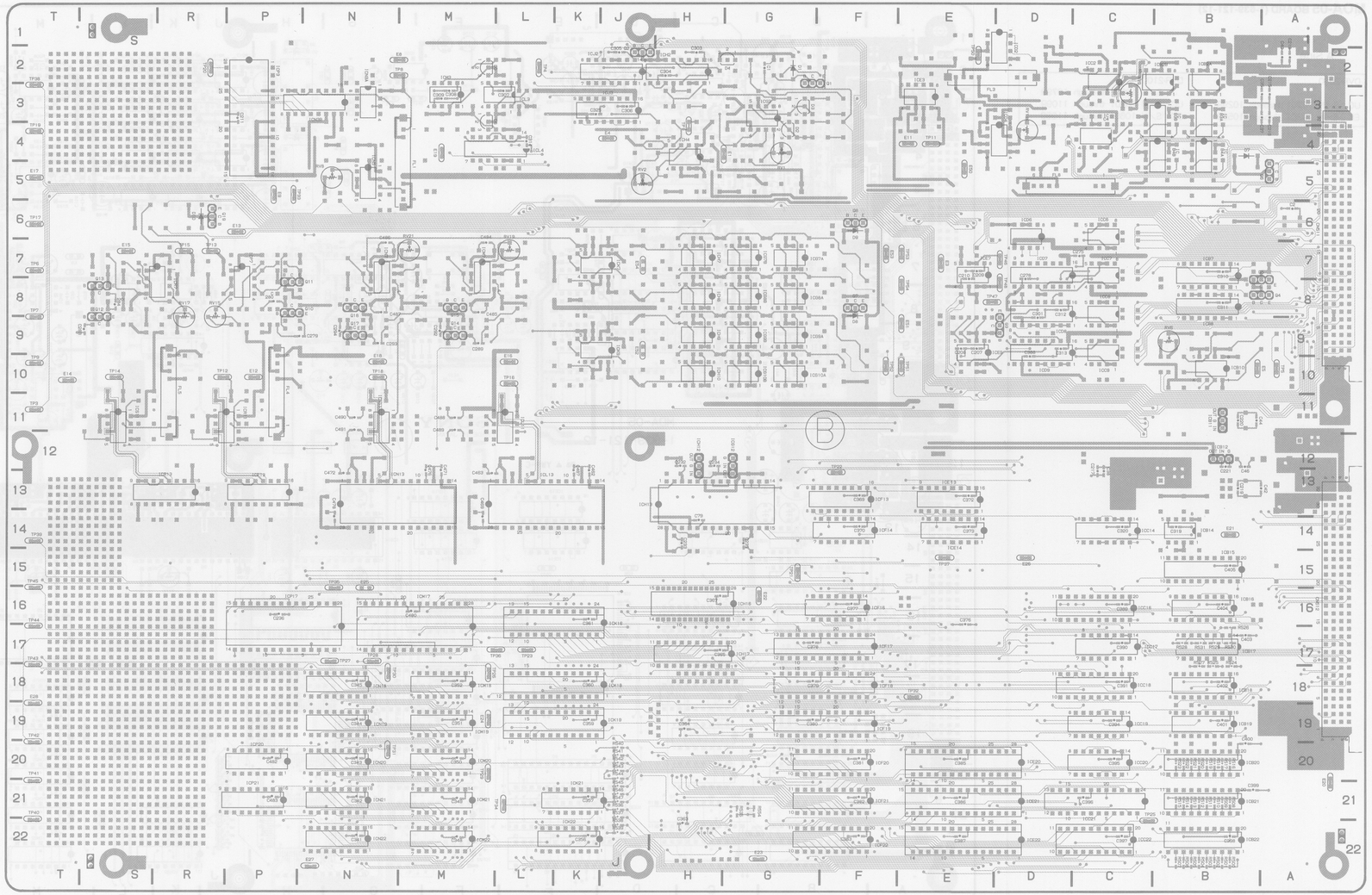

1-639-121-13 B SIDE

MOA-05 (1-639-121-13)

DVR-2000
DVR-2100

CN511	A6	Q3	D9
CN512	A16	Q4	B8
		Q5	B8
D1	G2	Q6	A5
D2	G4	Q7	F8
D3	G3	Q8	F6
D4	G2	Q10	P8
D5	M2	Q11	P8
D6	M4	Q12	S9
D7	B4	Q13	S8
D8	F8	Q14	M9
D9	F6	Q15	M8
D10	R6	Q17	N9
		Q18	N8
E1	H4	Q19	R6
E3	E7		
E5	B10	RV1	G4
E9	P5	RV2	J5
E13	P6	RV6	B9
E14	T10	RV8	N5
E16	L10	RV9	C3
E17	T5	RV11	D4
E18	N10	RV15	R9
E19	M4	RV17	R9
E20	A21	RV19	L7
E21	B14	RV21	M7
E22	G16		
E23	G22	RY1	G2
E24	M19	RY2	B5
E25	N16	RY3	F9
E26	D15	RY4	F7
E27	N22	RY5	R6
E28	T19		
E50	E5	SL1	G1
		SL2	G1
FL1	M5		
FL3	E2	TP3	T11
FL4	P10	TP4	L2
FL5	R10	TP5	A10
FL8	D5	TP6	T7
		TP7	T9
MF1	J21	TP9	T10
MF2	J21	TP13	R7
MF3	J21	TP15	R7
MF4	J20	TP17	T6
MF5	J20	TP19	T4
MF6	J20	TP37	E15
MF7	J20	TP38	T3
MF8	J20	TP39	T14
MF9	J22	TP40	T22
MF10	J22	TP41	T21
MF11	J21	TP42	T20
MF12	J21	TP43	T18
		TP44	T17
Q1	G2	TP45	T16
Q2	J2		

IC No. on this board shows its address.

20-17 (c)

MOA-05 (1-639-121-12)

DVR-2000
DVR-2100

CN511	A6	Q5	A8	TP23	L17
CN512	A17	Q6	A5	TP25	C21
		Q7	H4	TP26	M18
D1	F7	Q8	H1	TP27	N17
D2	F9	Q10	P9	TP28	N17
D3	F8	Q11	P8	TP29	M20
D4	G7	Q12	S9	TP30	N18
D5	K7	Q13	S8	TP31	N20
D6	K8	Q14	P4	TP32	E18
D7	B4	Q15	N4	TP33	N11
D8	H4	Q17	P1	TP34	L21
D9	H2	Q18	N1	TP35	N15
D10	R6	Q19	R5	TP36	M17
				TP37	E15
E1	G9	RV1	F9	TP38	S2
E3	E7	RV2	H10	TP39	S14
E4	H9	RV6	B9	TP40	S21
E5	A10	RV7	N10	TP41	S20
E8	M7	RV8	M10	TP42	S19
E9	N11	RV9	C3	TP43	S17
E11	G3	RV11	D2	TP44	S16
E12	Q12	RV14	N15	TP45	S15
E13	Q7	RV15	Q9	TP46	E7
E14	S12	RV16	Q15	TP47	E8
E15	R7	RV17	Q9	TP48	E8
E16	Q4	RV18	K15	TP50	E4
E17	S5	RV19	N6	TP51	G5
E18	Q2	RV20	M15	TP52	H5
E19	L9	RV21	N3	TP53	G2
E20	A21			TP54	G3
E21	B14	RY1	F7		
E22	G16	RY2	A5		
E23	G22	RY3	H5		
E24	M19	RY4	H3		
E25	N15	RY5	R6		
E26	D15				
E27	N22	TP1	G8		
E28	S18	TP3	S11		
E50	E2	TP4	G8		
E51	G4	TP5	A10		
E52	M5	TP6	S7		
E53	H2	TP7	S8		
E54	M2	TP8	M7		
		TP9	S10		
FL1	M9	TP11	F3		
FL3	E1	TP12	Q12		
FL4	P11	TP13	Q7		
FL5	R11	TP14	R12		
FL6	P6	TP15	R7		
FL7	P3	TP16	Q5		
FL8	D5	TP17	S6		
		TP18	Q2		
Q1	F8	TP19	S4		
Q2	H6	TP20	P7		
Q3	E9	TP21	G15		
Q4	A8	TP22	F12		

IC No. on this board shows its address.

MOA-05 BOARD (1-639-121-12)

A Side

DVR-2000	DVR-2100
	J ; S/N 10601 through 10799
UC ; S/N 10201 through 10299	UC ; S/N 10601 through 11099
EK ; S/N 10301 through 10599	EK ; S/N 10601 through 11099

MOA-05 BOARD CARD RACK

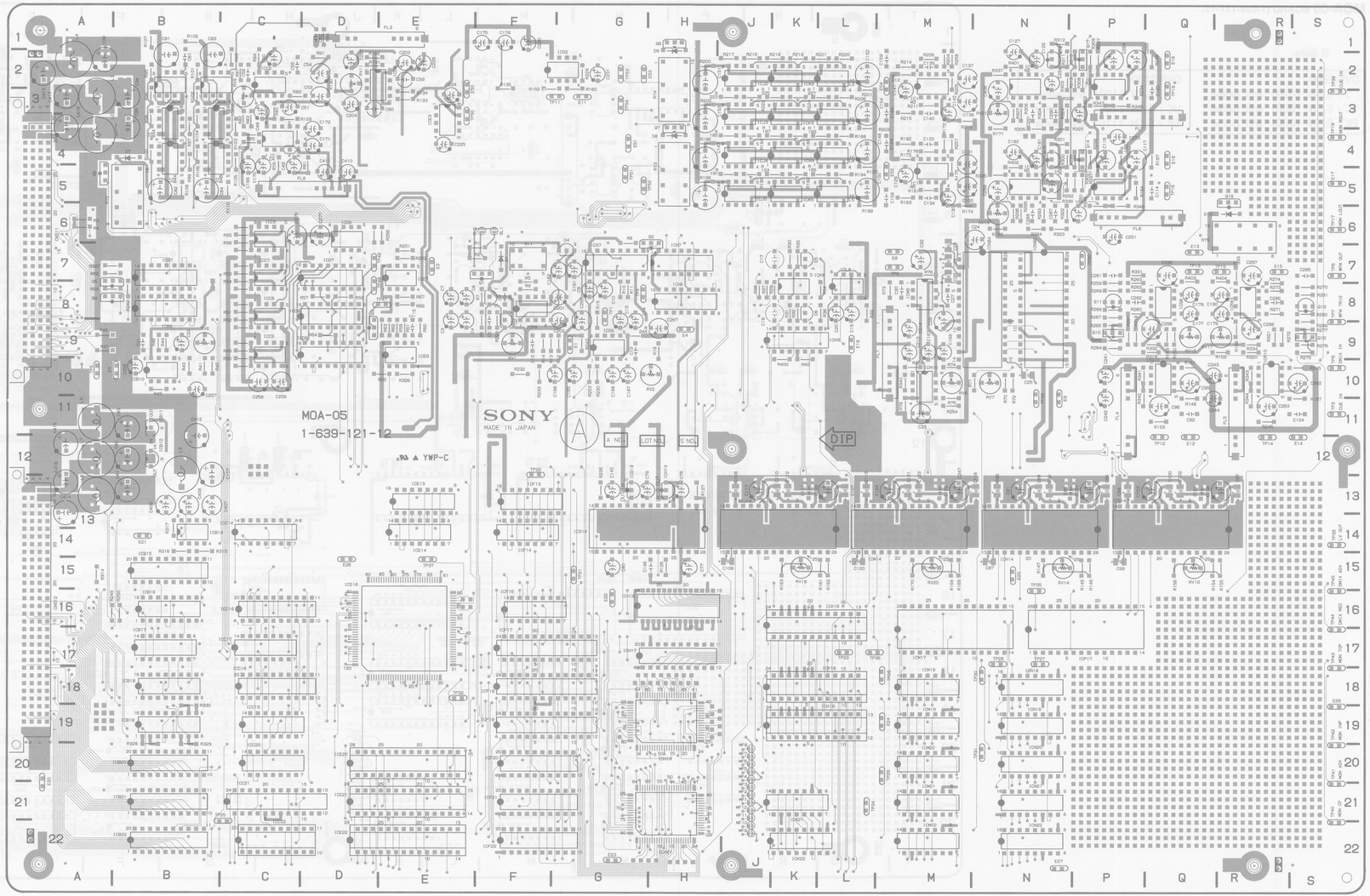

1-639-121-12 A SIDE

20-16 (b)

CARD RACK **MOA-05 BOARD**

MOA-05 BOARD (1-639-121-12)

B Side

DVR-2000	DVR-2100
	J ; S/N 10601 through 10799
UC ; S/N 10201 through 10299	UC ; S/N 10601 through 11099
EK ; S/N 10301 through 10599	EK ; S/N 10601 through 11099

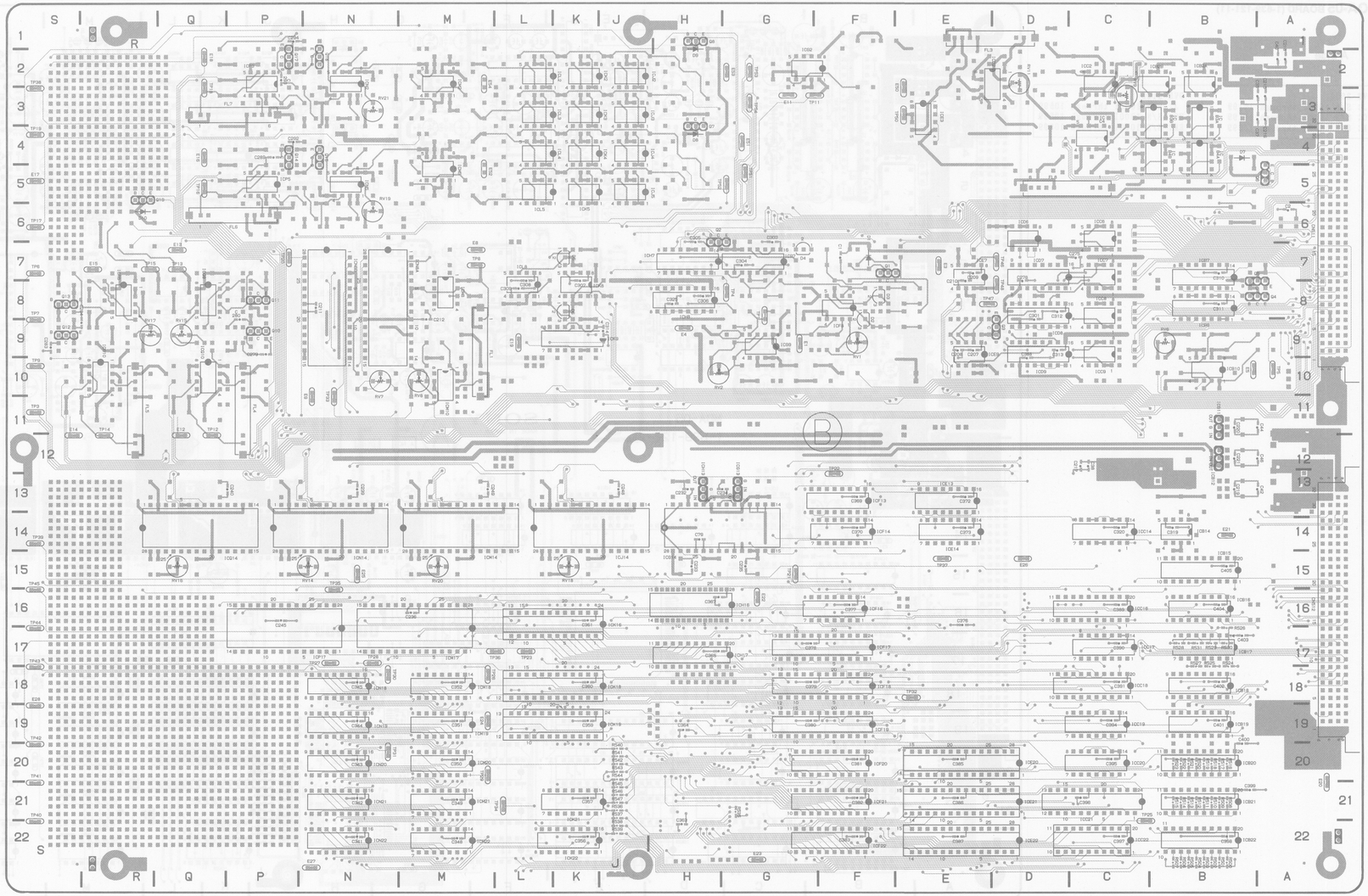

1-639-121-12 B SIDE

MOA-05 (1-639-121-12)

DVR-2000
DVR-2100

CN511	A6	Q5	A8	TP23	L17
CN512	A17	Q6	A5	TP25	C21
		Q7	H4	TP26	M18
D1	F7	Q8	H1	TP27	N17
D2	F9	Q10	P9	TP28	N17
D3	F8	Q11	P8	TP29	M20
D4	G7	Q12	S9	TP30	N18
D5	K7	Q13	S8	TP31	N20
D6	K8	Q14	P4	TP32	E18
D7	B4	Q15	N4	TP33	N11
D8	H4	Q17	P1	TP34	L21
D9	H2	Q18	N1	TP35	N15
D10	R6	Q19	R5	TP36	M17
				TP37	E15
E1	G9	RV1	F9	TP38	S2
E3	E7	RV2	H10	TP39	S14
E4	H9	RV6	B9	TP40	S21
E5	A10	RV7	N10	TP41	S20
E8	M7	RV8	M10	TP42	S19
E9	N11	RV9	C3	TP43	S17
E11	G3	RV11	D2	TP44	S16
E12	Q12	RV14	N15	TP45	S15
E13	Q7	RV15	Q9	TP46	E7
E14	S12	RV16	Q15	TP47	E8
E15	R7	RV17	Q9	TP48	E8
E16	Q4	RV18	K15	TP50	E4
E17	S5	RV19	N6	TP51	G5
E18	Q2	RV20	M15	TP52	H5
E19	L9	RV21	N3	TP53	G2
E20	A21			TP54	G3
E21	B14	RY1	F7		
E22	G16	RY2	A5		
E23	G22	RY3	H5		
E24	M19	RY4	H3		
E25	N15	RY5	R6		
E26	D15				
E27	N22	TP1	G8		
E28	S18	TP3	S11		
E50	E2	TP4	G8		
E51	G4	TP5	A10		
E52	M5	TP6	S7		
E53	H2	TP7	S8		
E54	M2	TP8	M7		
		TP9	S10		
FL1	M9	TP11	F3		
FL3	E1	TP12	Q12		
FL4	P11	TP13	Q7		
FL5	R11	TP14	R12		
FL6	P6	TP15	R7		
FL7	P3	TP16	Q5		
FL8	D5	TP17	S6		
		TP18	Q2		
Q1	F8	TP19	S4		
Q2	H6	TP20	P7		
Q3	E9	TP21	G15		
Q4	A8	TP22	F12		

IC No. on this board shows its address.

20-17 (b)

MOA-05 BOARD CARD RACK

MOA-05 BOARD (1-639-121-11)

MOA-05 (1-639-121-11)

DVR-2000
DVR-2100

CN511	A6	Q4	A8	TP12	Q12
CN512	A17	Q5	A8	TP13	Q7
		Q6	A5	TP14	R12
D1	F7	Q7	H3	TP15	R7
D2	F9	Q8	H1	TP16	Q5
D3	F8	Q10	P9	TP17	S6
D4	G7	Q11	P8	TP18	Q2
D5	K7	Q12	S9	TP19	S3
D6	K8	Q13	S8	TP20	P7
D7	B4	Q14	P4	TP21	G15
D8	H4	Q15	N4	TP22	F12
D9	N2	Q17	P1	TP23	L17
D10	Q6	Q18	N1	TP25	C21
		Q19	R5	TP26	M18
E1	G9			TP27	N17
E3	E7	RB7	B22	TP28	N17
E4	H9	RB8	B22	TP29	M20
E5	A10	RB9	B21	TP30	N18
E8	M7	RB10	B18	TP31	N20
E9	N11	RB11	J20	TP32	E18
E11	G3	RB12	H21	TP33	N11
E12	Q12			TP34	L21
E13	Q7	RV1	F9	TP35	N15
E14	S12	RV2	H10	TP36	M17
E15	R7	RV6	B9	TP37	E15
E16	Q4	RV7	N10	TP38	S2
E17	S5	RV8	M10	TP39	S14
E18	Q2	RV9	C2	TP40	S21
E19	L9	RV11	D2	TP41	S20
E20	A21	RV13	F3	TP42	S19
E21	B14	RV14	N15	TP43	S17
E22	G16	RV15	Q9	TP44	S16
E23	G22	RV16	Q15	TP45	S15
E24	M19	RV17	Q9	TP46	E7
E25	N15	RV18	K15	TP47	E8
E26	D15	RV19	N6	TP48	E8
E27	N22	RV20	M15	TP50	E4
E28	S18	RV21	N3	TP51	G5
E50	E2			TP52	H5
E51	G4	RY1	F7	TP53	G2
E52	M5	RY2	A5	TP54	G3
E53	H2	RY3	H5		
E54	M2	RY4	H3		
		RY5	Q6		
FL1	M9				
FL3	E1	TP1	G8		
FL4	P11	TP3	S11		
FL5	R11	TP4	G8		
FL6	P6	TP5	A10		
FL7	P3	TP6	S7		
		TP7	S8		
Q1	F8	TP8	M7		
Q2	H6	TP9	S10		
Q3	D8	TP11	F3		

IC No. on this board shows its address.

A Side

DVR-2000	DVR-2100
J: S/N 10001 through 10199	J: S/N 10001 through 10599
UC: S/N 10001 through 10199	UC: S/N 10001 through 10599
EK: S/N 10001 through 10299	EK: S/N 10001 through 10599

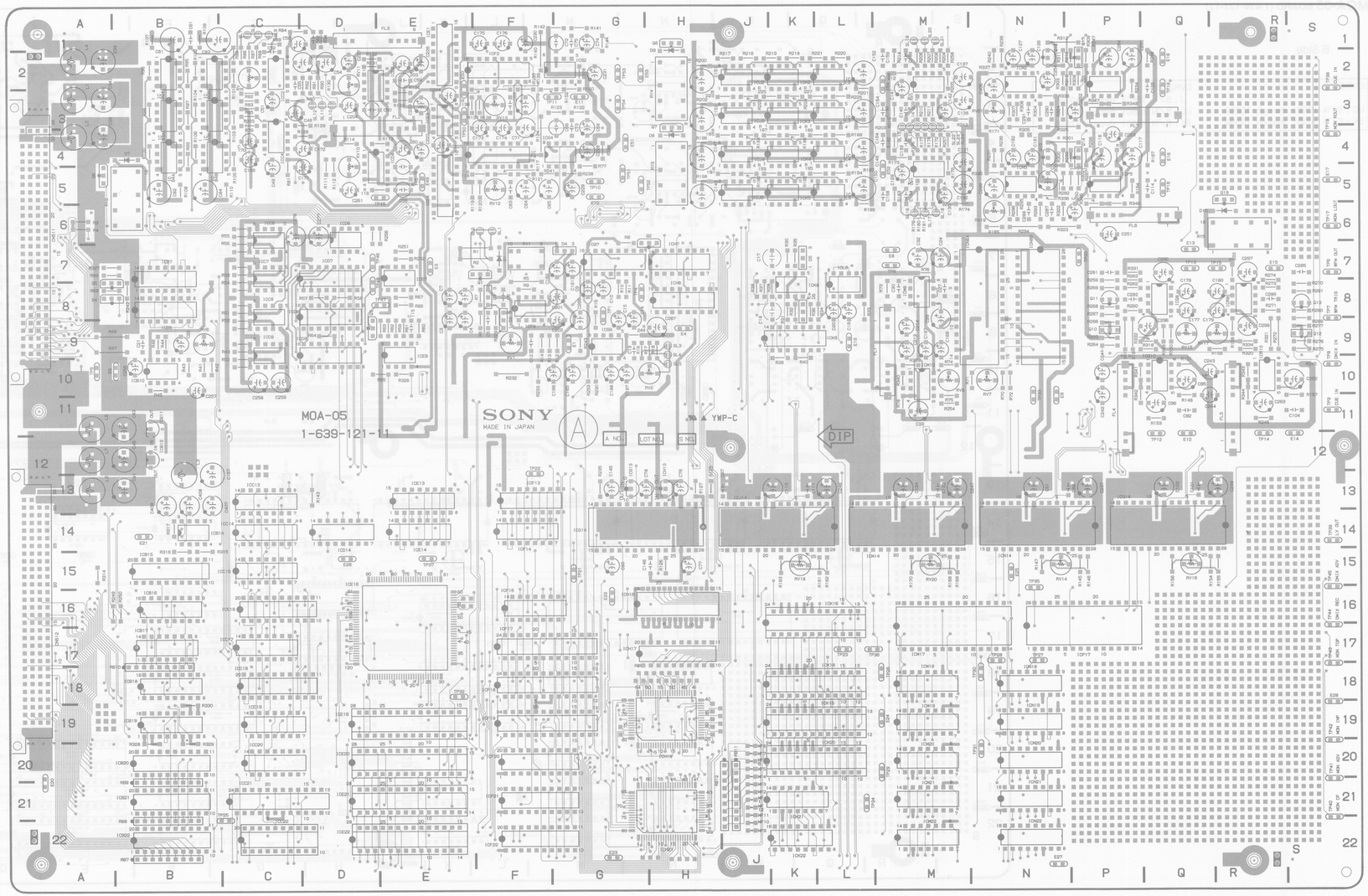

MOA-05 BOARD CARD RACK

CARD RACK MOA-05 BOARD

MOA-05 BOARD (1-639-121-11)

B Side

DVR-2000	DVR-2100
J: S/N 10001 through 10199	J: S/N 10001 through 10599
UC: S/N 10001 through 10199	UC: S/N 10001 through 10599
EK: S/N 10001 through 10299	EK: S/N 10001 through 10599

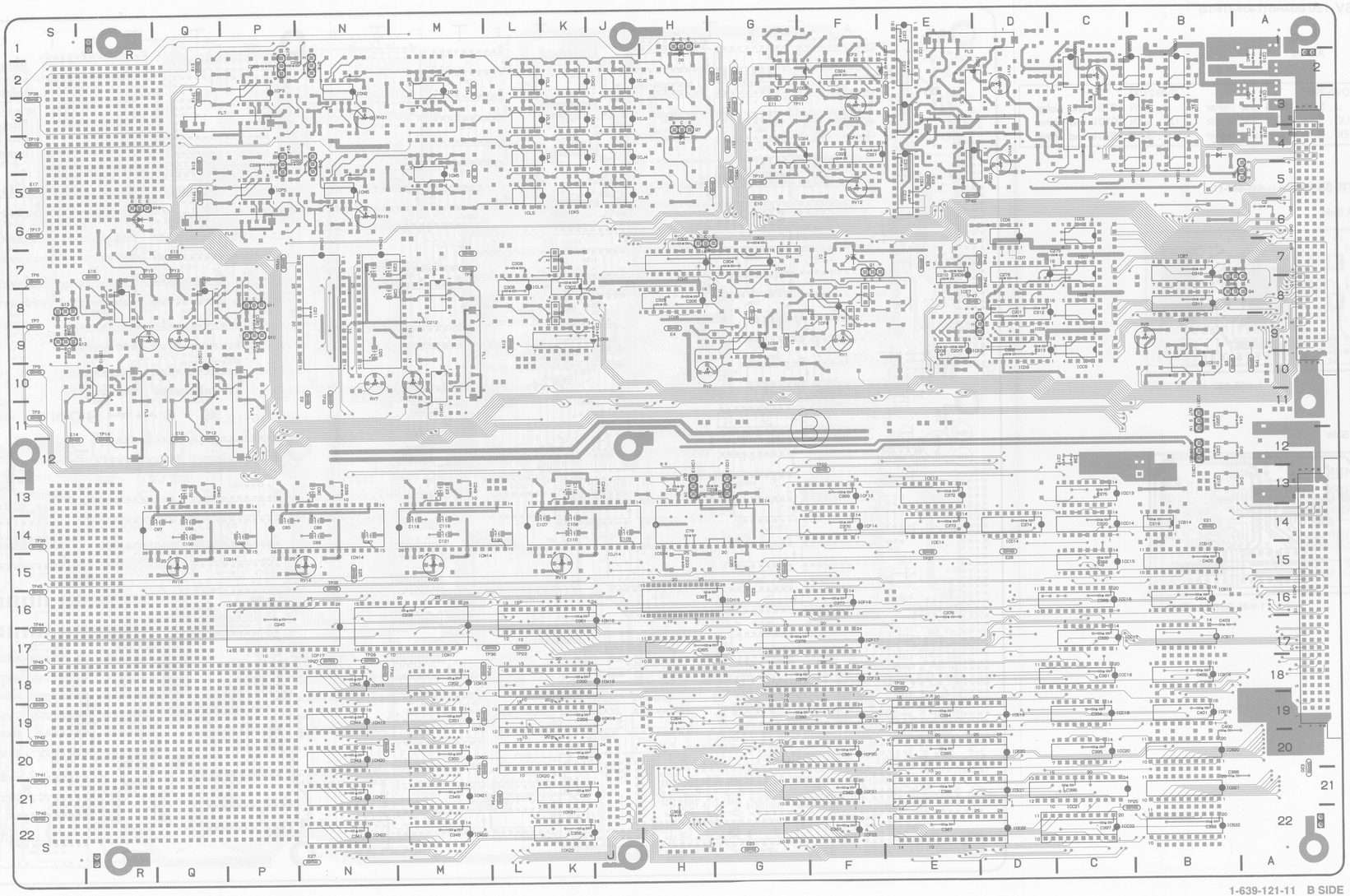

1-639-121-11 B SIDE

MOA-05 (1-639-121-11)

DVR-2000
DVR-2100

CN511	A6	Q4	A8	TP12	Q12
CN512	A17	Q5	A8	TP13	Q7
		Q6	A5	TP14	R12
D1	F7	Q7	H3	TP15	R7
D2	F9	Q8	H1	TP16	Q5
D3	F8	Q10	P9	TP17	S6
D4	G7	Q11	P8	TP18	Q2
D5	K7	Q12	S9	TP19	S3
D6	K8	Q13	S8	TP20	P7
D7	B4	Q14	P4	TP21	G15
D8	H4	Q15	N4	TP22	F12
D9	N2	Q17	P1	TP23	L17
D10	Q6	Q18	N1	TP25	C21
		Q19	R5	TP26	M18
E1	G9			TP27	N17
E3	E7	RB7	B22	TP28	N17
E4	H9	RB8	B22	TP29	M20
E5	A10	RB9	B21	TP30	N18
E8	M7	RB10	B18	TP31	N20
E9	N11	RB11	J20	TP32	E18
E11	G3	RB12	H21	TP33	N11
E12	Q12			TP34	L21
E13	Q7	RV1	F9	TP35	N15
E14	S12	RV2	H10	TP36	M17
E15	R7	RV6	B9	TP37	E15
E16	Q4	RV7	N10	TP38	S2
E17	S5	RV8	M10	TP39	S14
E18	Q2	RV9	C2	TP40	S21
E19	L9	RV11	D2	TP41	S20
E20	A21	RV13	F3	TP42	S19
E21	B14	RV14	N15	TP43	S17
E22	G16	RV15	Q9	TP44	S16
E23	G22	RV16	Q15	TP45	S15
E24	M19	RV17	Q9	TP46	E7
E25	N15	RV18	K15	TP47	E8
E26	D15	RV19	N6	TP48	E8
E27	N22	RV20	M15	TP50	E4
E28	S18	RV21	N3	TP51	G5
E50	E2			TP52	H5
E51	G4	RY1	F7	TP53	G2
E52	M5	RY2	A5	TP54	G3
E53	H2	RY3	H5		
E54	M2	RY4	H3		
		RY5	Q6		
FL1	M9				
FL3	E1	TP1	G8		
FL4	P11	TP3	S11		
FL5	R11	TP4	G8		
FL6	P6	TP5	A10		
FL7	P3	TP6	S7		
		TP7	S8		
Q1	F8	TP8	M7		
Q2	H6	TP9	S10		
Q3	D8	TP11	F3		

IC No. on this board shows its address.

20-17 (a)

CARD RACK SV-120/TR-83 BOARD

SV-120/TR-83 BOARD CARD RACK

SV-120 (1-639-116-12)

DVR-2000
DVR-2100

CN501	A5	RB16	C1	TP24	Q16
CN502	A13	RB17	C7	TP25	L15
CN539	Q14	RB18	D8		
CN540	K13	RB19	D8		
		RB20	D9		
CP1	N10	RB21	E11		
		RB22	F9		
D1	A15	RB23	H3		
D2	A15	RB24	H3		
D3	M2	RB25	J2		
D4	P6	RB26	H13		
D5	Q3	RB27	H14		
D6	Q3	RB28	J13		
D7	Q3	RB29	H13		
D8	Q4	RB30	J14		
D9	Q4	RB31	H15		
D10	Q5	RB32	M11		
D11	E17	RB33	P9		
		RB34	Q10		
E1	A1	RB35	Q12		
E2	A10	RB36	N12		
E4	H1	RB37	N14		
E5	G10				
E6	J16	RV1	A15		
E8	M10				
E9	Q18	S1	B14		
E10	Q6	S2	D7		
E11	Q13	S3	Q1		
		S4	Q2		
FB1	Q15	S5	Q13		
		S6	Q14		
JP1	D8	S7	Q16		
JP2	Q16	S8	Q18		
JP3	Q17				
		TP1	Q7		
JS1	D8	TP2	Q7		
JS2	Q16	TP3	Q8		
JS3	Q17	TP4	Q8		
		TP5	Q8		
Q1	A7	TP6	Q9		
Q2	A8	TP7	Q9		
		TP8	Q10		
RB1	A2	TP9	Q11		
RB2	A3	TP10	Q11		
RB3	A4	TP11	Q11		
RB4	A8	TP12	Q11		
RB5	A9	TP13	Q12		
RB6	A10	TP14	D14		
RB7	A11	TP15	D15		
RB8	A14	TP16	K16		
RB10	B1	TP18	N14		
RB11	B2	TP19	N15		
RB12	B3	TP20	N18		
RB13	C4	TP21	P12		
RB14	C4	TP22	Q13		
RB15	C1	TP23	Q13		

IC No. on this board shows its address.

SV-120 BOARD (1-639-116-12)

A Side

DVR-2000	DVR-2100
J ; S/N 10201 and higher	J ; S/N 10701 and higher
UC ; S/N 10201 and higher	UC ; S/N 10701 and higher
EK ; S/N 10401 and higher	EK ; S/N 10701 and higher

TR-83 BOARD (1-645-687-11)

A Side

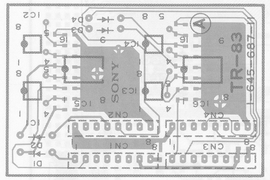

1-645-687-11 A SIDE

B Side

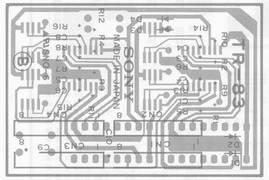

1-645-687-11 B SIDE

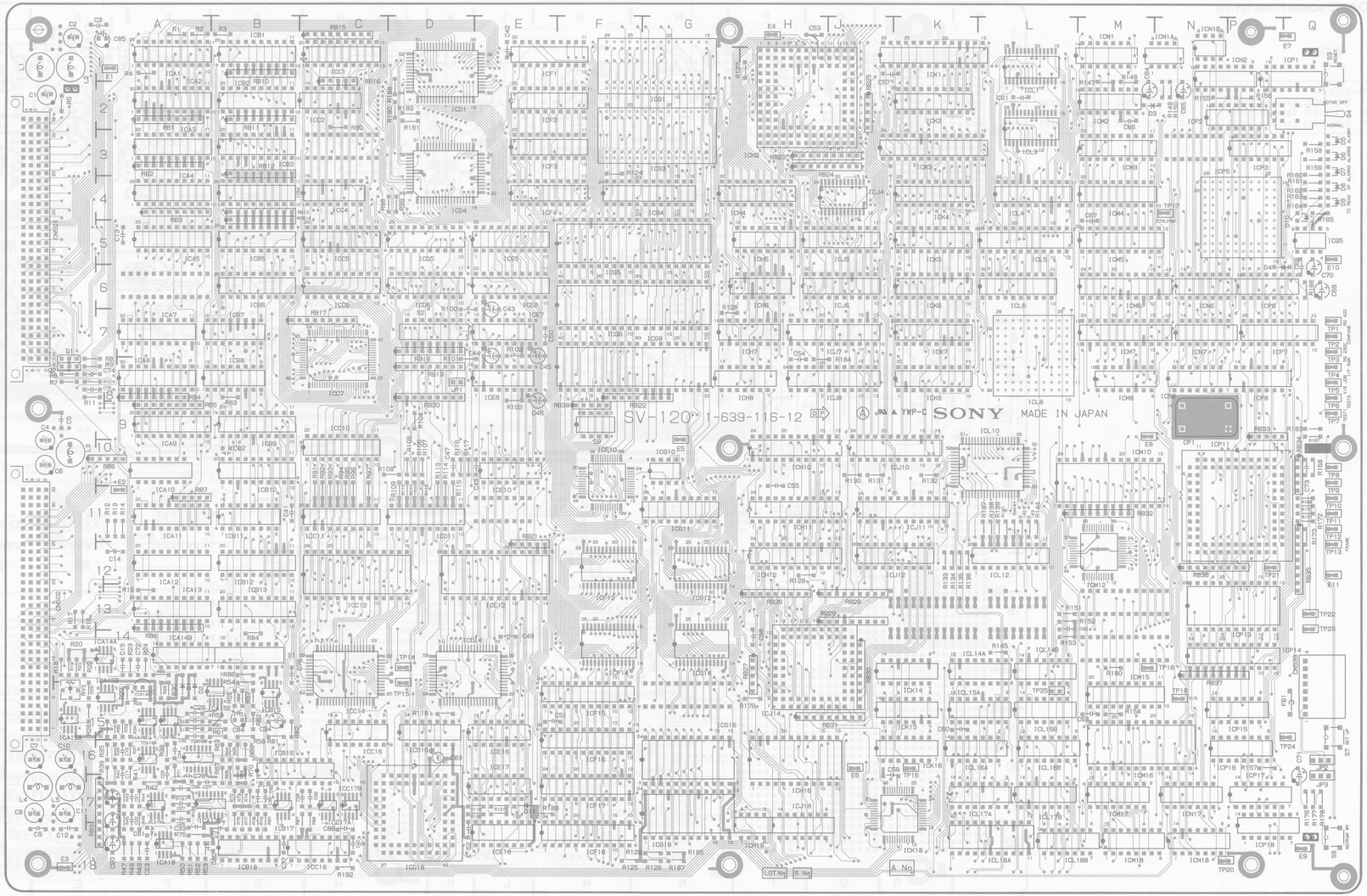

1-639-116-12 A SIDE

20-18 (b)

SV-120 BOARD CARD RACK
CARD RACK SV-120 BOARD

SV-120 BOARD (1-639-116-12)

B Side

DVR-2000	DVR-2100
J: S/N 10201 and higher	J: S/N 10701 and higher
UC: S/N 10201 and higher	UC: S/N 10701 and higher
EK: S/N 10401 and higher	EK: S/N 10701 and higher

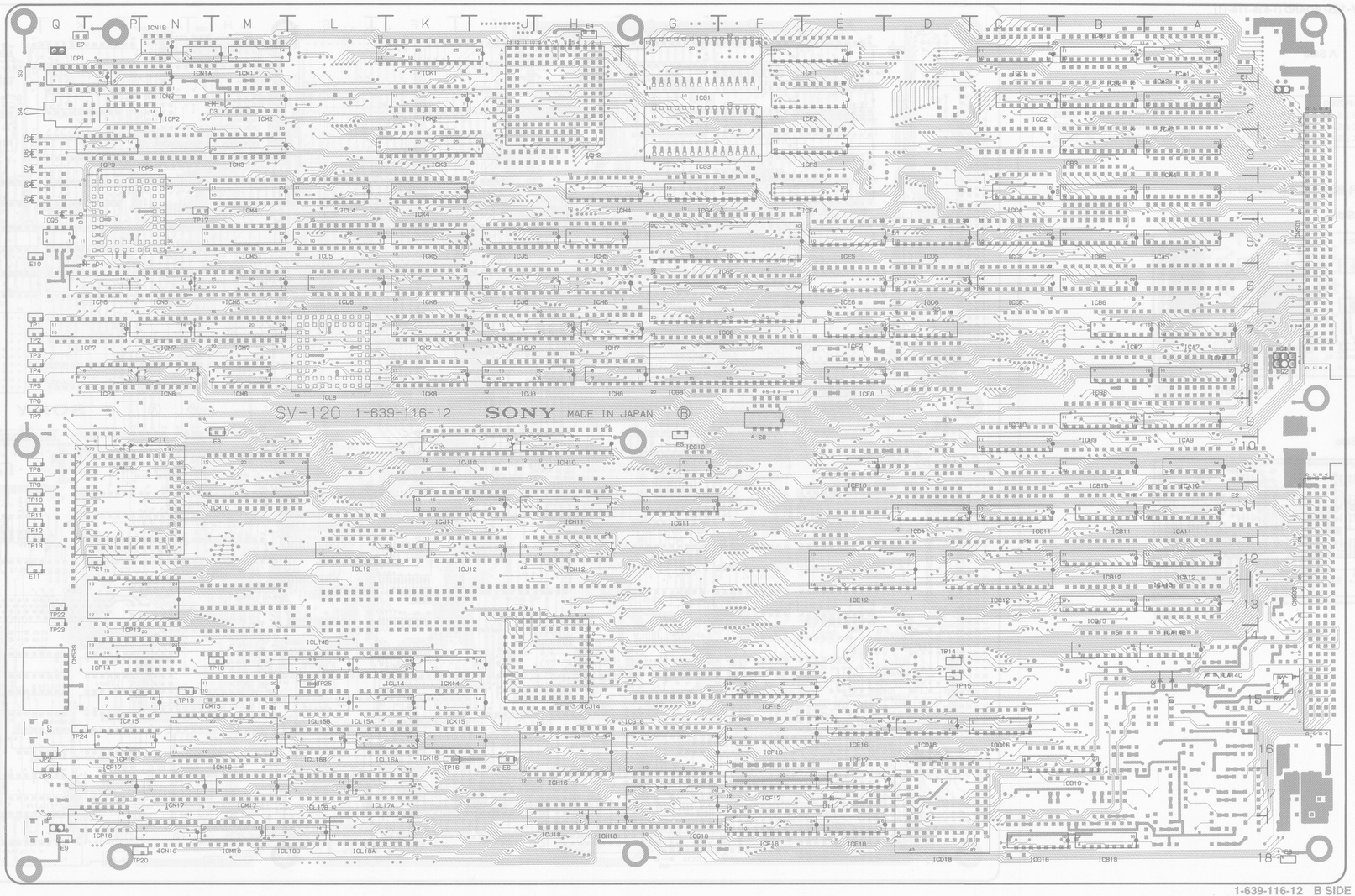

1-639-116-12 B SIDE

SV-120 (1-639-116-12)

DVR-2000
DVR-2100

CN501	A5	RB16	C1	TP24	Q16
CN502	A13	RB17	C7	TP25	L15
CN539	Q14	RB18	D8		
CN540	K13	RB19	D8		
		RB20	D9		
CP1	N10	RB21	E11		
		RB22	F9		
D1	A15	RB23	H3		
D2	A15	RB24	H3		
D3	M2	RB25	J2		
D4	P6	RB26	H13		
D5	Q3	RB27	H14		
D6	Q3	RB28	J13		
D7	Q3	RB29	H13		
D8	Q4	RB30	J14		
D9	Q4	RB31	H15		
D10	Q5	RB32	M11		
D11	E17	RB33	P9		
		RB34	Q10		
E1	A1	RB35	Q12		
E2	A10	RB36	N12		
E4	H1	RB37	N14		
E5	G10				
E6	J16	RV1	A15		
E8	M10				
E9	Q18	S1	B14		
E10	Q6	S2	D7		
E11	Q13	S3	Q1		
		S4	Q2		
FB1	Q15	S5	Q13		
		S6	Q14		
JP1	D8	S7	Q16		
JP2	Q16	S8	Q18		
JP3	Q17				
		TP1	Q7		
JS1	D8	TP2	Q7		
JS2	Q16	TP3	Q8		
JS3	Q17	TP4	Q8		
		TP5	Q8		
Q1	A7	TP6	Q9		
Q2	A8	TP7	Q9		
		TP8	Q10		
RB1	A2	TP9	Q11		
RB2	A3	TP10	Q11		
RB3	A4	TP11	Q11		
RB4	A8	TP12	Q11		
RB5	A9	TP13	Q12		
RB6	A10	TP14	D14		
RB7	A11	TP15	D15		
RB8	A14	TP16	K16		
RB10	B1	TP18	N14		
RB11	B2	TP19	N15		
RB12	B3	TP20	N18		
RB13	C4	TP21	P12		
RB14	C4	TP22	Q13		
RB15	C1	TP23	Q13		

IC No. on this board shows its address.

20-19 (b)

SV-120 (1-639-116-11)

DVR-2000
DVR-2100

CN501	A5	RB11	B2	TP16	K16
CN502	A13	RB12	B3	TP17	N4
CN539	Q14	RB13	C4	TP18	N14
CN540	K13	RB14	C4	TP19	N15
		RB15	C1	TP20	N18
CP1	N10	RB16	C1	TP21	P12
		RB17	C7	TP22	Q13
D1	A15	RB18	D8	TP23	Q13
D2	A15	RB19	D8	TP24	Q16
D3	M2	RB20	D9		
D4	P6	RB21	E11		
D5	Q3	RB22	F9		
D6	Q3	RB23	H3		
D7	Q3	RB24	H3		
D8	Q4	RB25	J2		
D9	Q4	RB26	H13		
D10	Q5	RB27	H14		
D11	E17	RB28	J13		
		RB29	H13		
E1	A1	RB30	J14		
E2	A10	RB31	H15		
E3	A18	RB32	M11		
E4	H1	RB33	P9		
E5	G10	RB34	Q10		
E6	J16	RB35	Q12		
E7	Q1	RB36	N12		
E8	M10	RB37	N14		
E9	Q18				
E10	Q6	RV1	A15		
E11	Q13				
		S1	B14		
FB1	Q15	S2	D7		
		S3	Q1		
JP1	D8	S4	Q2		
JP2	Q16	S5	Q13		
JP3	Q17	S6	Q14		
		S7	Q16		
JS1	D8	S8	Q18		
JS2	Q16				
JS3	Q17	TP1	Q7		
		TP2	Q7		
Q1	A7	TP3	Q8		
Q2	A8	TP4	Q8		
		TP5	Q8		
RB1	A2	TP6	Q9		
RB2	A3	TP7	Q9		
RB3	A4	TP8	Q10		
RB4	A8	TP9	Q11		
RB5	A9	TP10	Q11		
RB6	A10	TP11	Q11		
RB7	A11	TP12	Q11		
RB8	A14	TP13	Q12		
RB9	A18	TP14	D14		
RB10	B1	TP15	D15		

IC No. on this board shows its address.

SV-120 BOARD (1-639-116-11)

A Side

DVR-2000	DVR-2100
J ; S/N 10001 through 10199	J ; S/N 10001 through 10699
UC ; S/N 10001 through 10199	UC ; S/N 10001 through 10699
EK ; S/N 10001 through 10399	EK ; S/N 10001 through 10699

TR-83 BOARD (1-645-687-11)

A Side

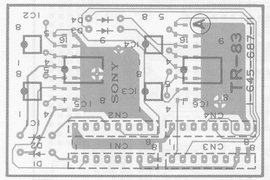

1-645-687-11 A SIDE

B Side

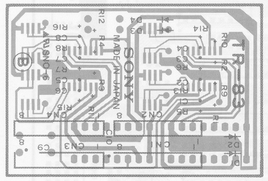

1-645-687-11 B SIDE

SV-120/TR-83 BOARD CARD RACK

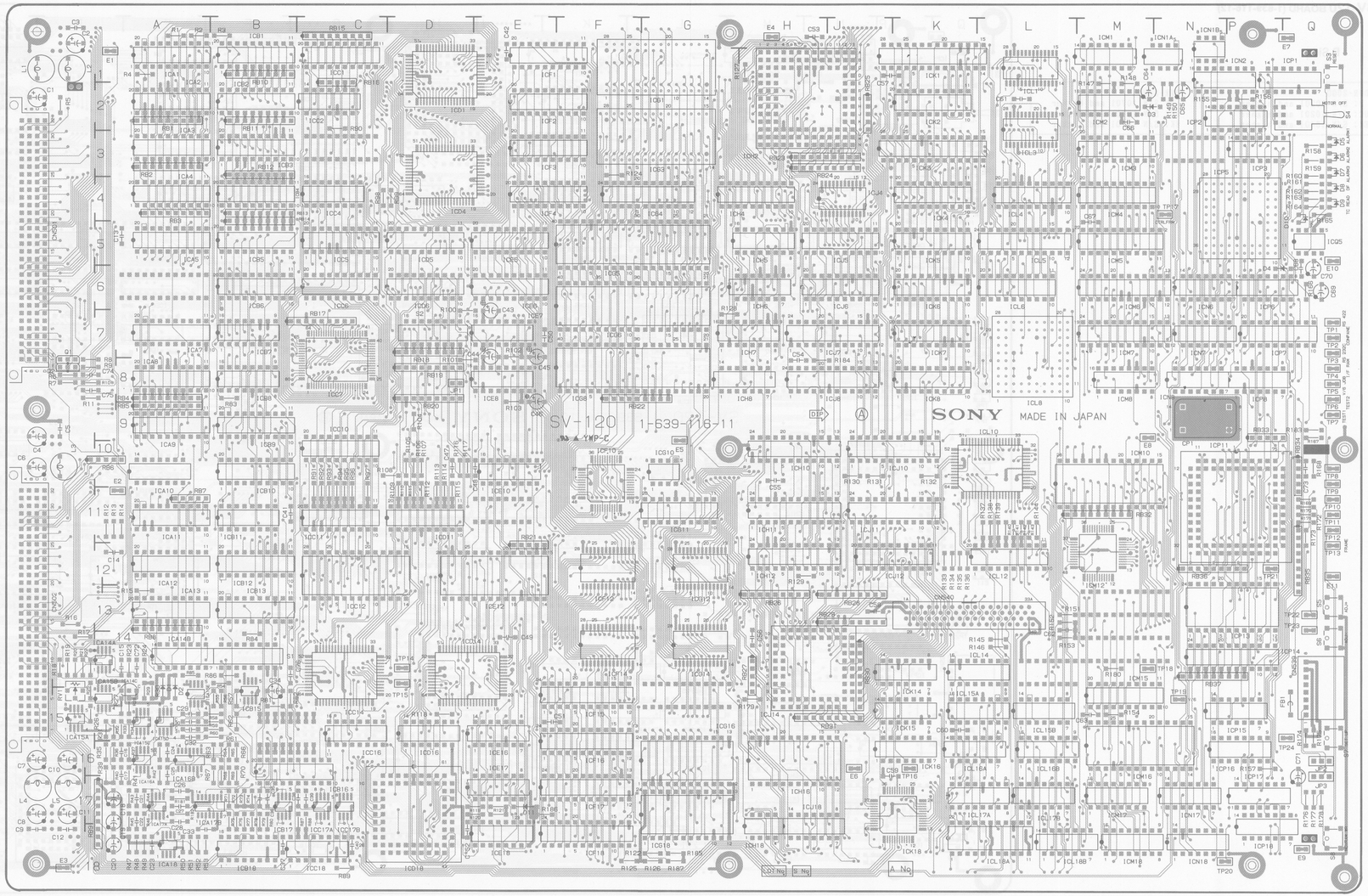

1-639-116-11 A SIDE

SV-120 BOARD CARD RACK
CARD RACK SV-120 BOARD

SV-120 BOARD (1-639-116-11)

B Side

DVR-2000	DVR-2100
J: S/N 10001 through 10199	J: S/N 10001 through 10699
UC: S/N 10001 through 10199	UC: S/N 10001 through 10699
EK: S/N 10001 through 10399	EK: S/N 10001 through 10699

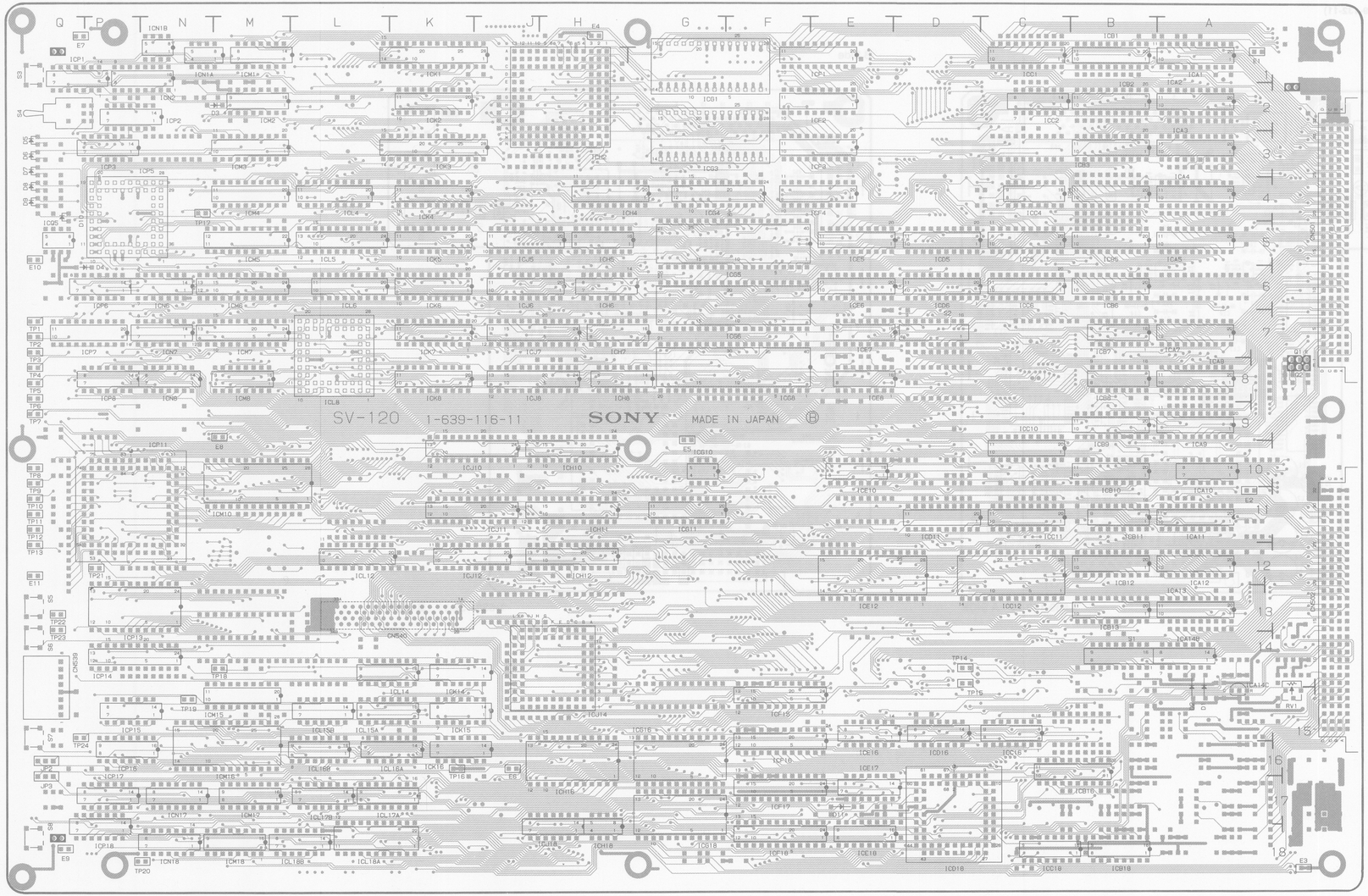

1-639-116-11 B SIDE

SV-120 (1-639-116-11)

DVR-2000
DVR-2100

CN501	A5	RB11	B2	TP16	K16
CN502	A13	RB12	B3	TP17	N4
CN539	Q14	RB13	C4	TP18	N14
CN540	K13	RB14	C4	TP19	N15
		RB15	C1	TP20	N18
CP1	N10	RB16	C1	TP21	P12
		RB17	C7	TP22	Q13
D1	A15	RB18	D8	TP23	Q13
D2	A15	RB19	D8	TP24	Q16
D3	M2	RB20	D9		
D4	P6	RB21	E11		
D5	Q3	RB22	F9		
D6	Q3	RB23	H3		
D7	Q3	RB24	H3		
D8	Q4	RB25	J2		
D9	Q4	RB26	H13		
D10	Q5	RB27	H14		
D11	E17	RB28	J13		
		RB29	H13		
E1	A1	RB30	J14		
E2	A10	RB31	H15		
E3	A18	RB32	M11		
E4	H1	RB33	P9		
E5	G10	RB34	Q10		
E6	J16	RB35	Q12		
E7	Q1	RB36	N12		
E8	M10	RB37	N14		
E9	Q18				
E10	Q6	RV1	A15		
E11	Q13				
		S1	B14		
FB1	Q15	S2	D7		
		S3	Q1		
JP1	D8	S4	Q2		
JP2	Q16	S5	Q13		
JP3	Q17	S6	Q14		
		S7	Q16		
JS1	D8	S8	Q18		
JS2	Q16				
JS3	Q17	TP1	Q7		
		TP2	Q7		
Q1	A7	TP3	Q8		
Q2	A8	TP4	Q8		
		TP5	Q8		
RB1	A2	TP6	Q9		
RB2	A3	TP7	Q9		
RB3	A4	TP8	Q10		
RB4	A8	TP9	Q11		
RB5	A9	TP10	Q11		
RB6	A10	TP11	Q11		
RB7	A11	TP12	Q11		
RB8	A14	TP13	Q12		
RB9	A18	TP14	D14		
RB10	B1	TP15	D15		

IC No. on this board shows its address.

20-19 (a)

SE-144 BOARD SE-144 BOARD

SE-144 BOARD (1-639-132-11)

SE-144 (1-639-132-11)

DVR-2000
DVR-2100

CNI16	C4	RB2	C5
		RB3	C5
CN356	E2	RB4	D5
CN727	C5	RB5	D5
CN738	A2		
CN739	A1	TP1	A2
CN741	C1	TP2	A2
		TP3	A2
D1	B2	TP4	A2
D2	B2		
D3	D4	X1	B3
D4	＊D1		
D5	＊D2	＊: B SIDE	
D6	＊B2		
D7	＊B2		
D8	＊B2		
D9	＊B2		
D10	＊C2		
D11	＊C2		
D12	＊C2		
D13	＊D2		
E1	A1		
E2	E5		
F1	E1		
IC1	A1		
IC2	B1		
IC3	B1		
IC4	A2		
IC5	B2		
IC6	C2		
IC7	A3		
IC8	D3		
IC9	E3		
IC10	A4		
IC11	B3		
IC12	C3		
IC13	D3		
IC14	E4		
IC15	A4		
IC16	C4		
IC17	D4		
IC18	D5		
IC19	E5		
IC20	E5		
Q1	D1		
Q2	C4		
Q3	C4		
Q4	＊D4		
RB1	E2		

A Side

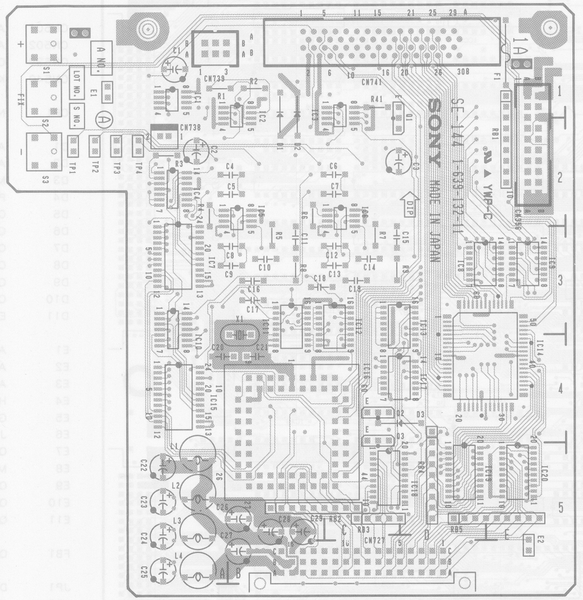

1-639-132-11 A SIDE

B Side

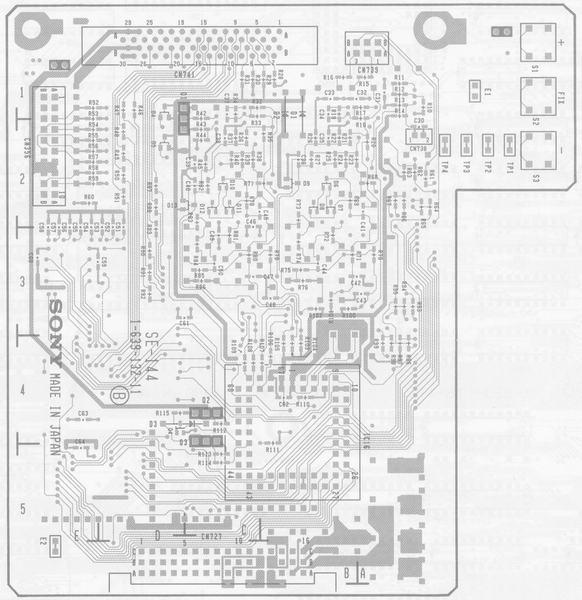

1-639-132-11 B SIDE

CN-508 BOARD

CN-508 BOARD (1-639-145-11)

A Side

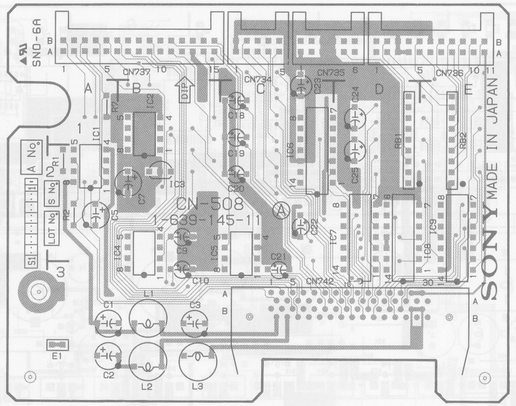

1-639-145-11 A SIDE

B Side

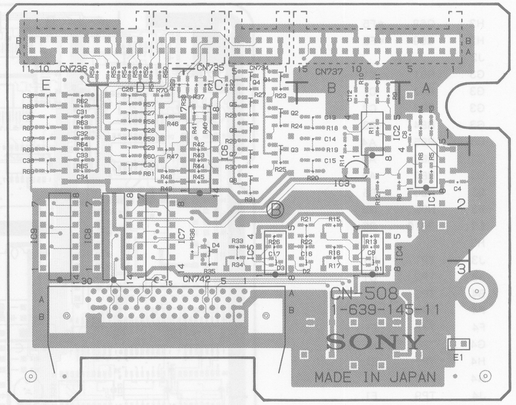

1-639-145-11 B SIDE

CN-508 (1-639-145-11)

DVR-2000
DVR-2100

CN734	C1
CN735	C1
CN736	E1
CN737	B1
CN742	C3
D1	*B3
D2	*B3
D3	*C3
D4	*C2
E1	A3
IC1	A1
IC2	B1
IC3	B2
IC4	B2
IC5	C2
IC6	C2
IC7	D2
IC8	E2
IC9	E2
Q1	*C1
Q2	*C1
Q3	*C2
Q4	*C1
Q5	*C1
Q6	*C1
Q7	*C2
Q8	*C2
RB1	D1
RB2	E1

* : B SIDE

20-21

CARD RACK MD-71 BOARD MD-71 BOARD CARD RACK

MD-71 BOARD (1-639-122-12)

DVR-2000	DVR-2100
J: S/N 10201 and higher	J: S/N 10701 and higher
UC: S/N 10201 and higher	UC: S/N 10701 and higher
EK: S/N 10401 and higher	EK: S/N 10701 and higher

MD-71 (1-639-122-12)

DVR-2000
DVR-2100

CN127	A2	IC6	C1	Q12	H2	Q68	*F5
		IC7	D1	Q13	H2	Q69	*F5
CN710	H5	IC8	B2	Q14	J2		
CN711	E5	IC9	C2	Q15	G3	RB1	C1
CN712	C5	IC10	C2	Q16	G3	RB2	C1
		IC11	D1	Q17	G3	RB3	C2
		IC12	D1	Q18	G3	RB4	B3
		IC13	E1	Q19	C3	RB5	A4
CR3	B3	IC14	D2	Q20	C3	RB6	A4
CR4	E3	IC15	D1	Q21	D3	RB7	A5
		IC16	E1	Q22	E3	RB8	B5
D1	B2	IC17	E1	Q23	E3	RB9	G5
D2	B2	IC18	D2	Q24	E3	RB10	G5
D3	F2	IC19	D2	Q25	H3		
D4	J2	IC20	E2	Q26	J3	TP1	D1
D5	E2	IC21	F1	Q27	J3	TP2	D1
D6	F2	IC22	F1	Q28	B4	TP3	D1
D7	J2	IC23	G1	Q29	F4	TP4	E1
D8	C3	IC24	H1	Q30	F4	TP5	E1
D9	D3	IC25	J1	Q31	G4	TP6	E1
D10	D3	IC26	J1	Q32	H4	TP7	E1
D11	E3	IC27	A2	Q33	H4	TP8	F1
D12	E3	IC28	A3	Q34	J4	TP9	F1
D13	F3	IC29	A3	Q35	*E1	TP10	F1
D14	F3	IC30	B3	Q36	*H1	TP11	H1
D15	G3	IC31	A3	Q37	*H1	TP12	H1
D16	G3	IC32	B3	Q38	*H1	TP13	H1
D17	H3	IC33	B3	Q39	*H1	TP14	H1
D18	H3	IC34	D3	Q40	*H2	TP15	H1
D19	H3	IC35	F3	Q41	*H1	TP16	H1
D20	J3	IC36	H3	Q42	*C3		
D21	J3	IC37	A4	Q43	*C3		
D22	D5	IC38	A4	Q44	*C3		
D23	*C2	IC39	B5	Q45	*E3		
D24	*C2	IC40	C5	Q46	*E3		
D25	*D1	IC41	C5	Q47	*F3		
D26	*E1	IC42	C4	Q48	*G2		
D27	*F2	IC43	D4	Q49	*G2		
D28	*C2	IC44	C5	Q50	*G3		
D29	*C4	IC45	D4	Q51	*G3		
D30	*G5	IC46	E4	Q52	*H2		
D31	*G5	IC47	D5	Q53	*H2		
D32	*G5	IC48	J5	Q54	*H2		
		IC49	J5	Q55	*H3		
E1	E1			Q56	*H3		
E2	G1	Q1	B1	Q57	*J3		
		Q2	C2	Q58	*H3		
E4	J4	Q3	G2	Q59	*J3		
		Q4	G2	Q60	*J2		
FB1	B3	Q5	C2	Q61	*J3		
		Q6	D2	Q62	*J3		
IC1	A1	Q7	D2	Q63	*J3		
IC2	A1	Q8	E2	Q64	*C4		
IC3	A1	Q9	F2	Q65			
IC4	A2	Q10	F2	Q66	*E5		
IC5	A2	Q11	G2	Q67	*F5		

*: B SIDE

A Side

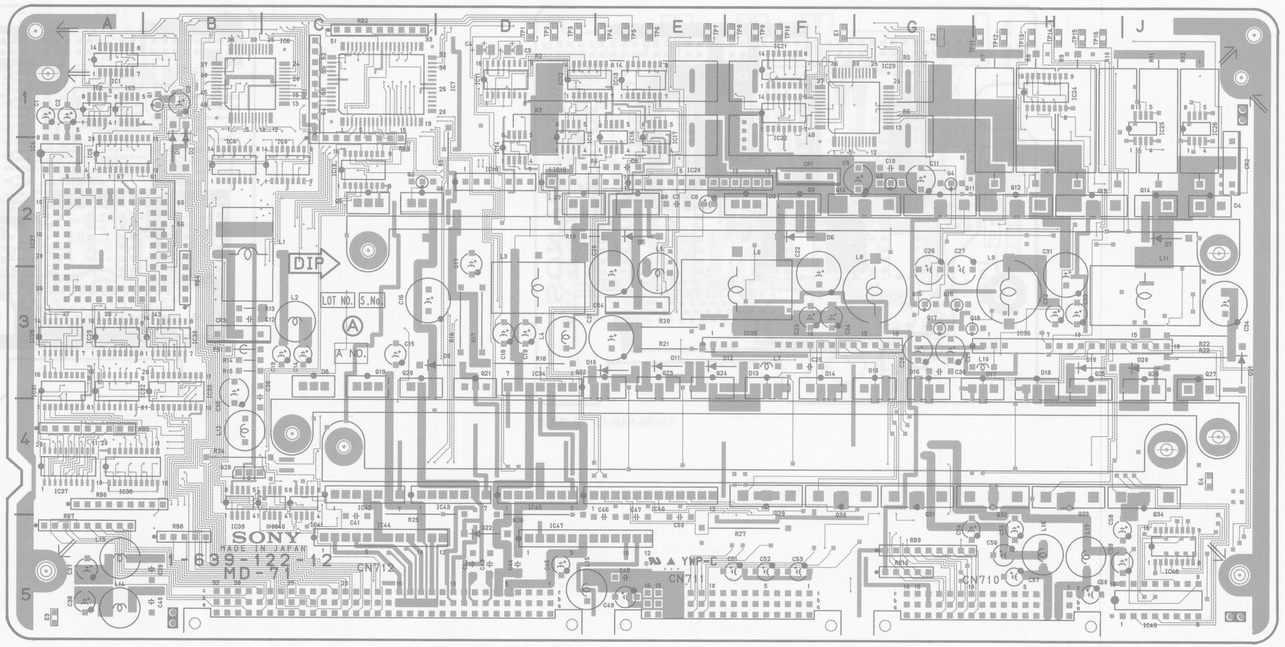

1-639-122-12 A SIDE

20-22 (b)

CARD RACK **MD-71 BOARD**

MD-71 BOARD (1-639-122-12)

DVR-2000	DVR-2100
J: S/N 10201 and higher	J: S/N 10701 and higher
UC: S/N 10201 and higher	UC: S/N 10701 and higher
EK: S/N 10401 and higher	EK: S/N 10701 and higher

B Side

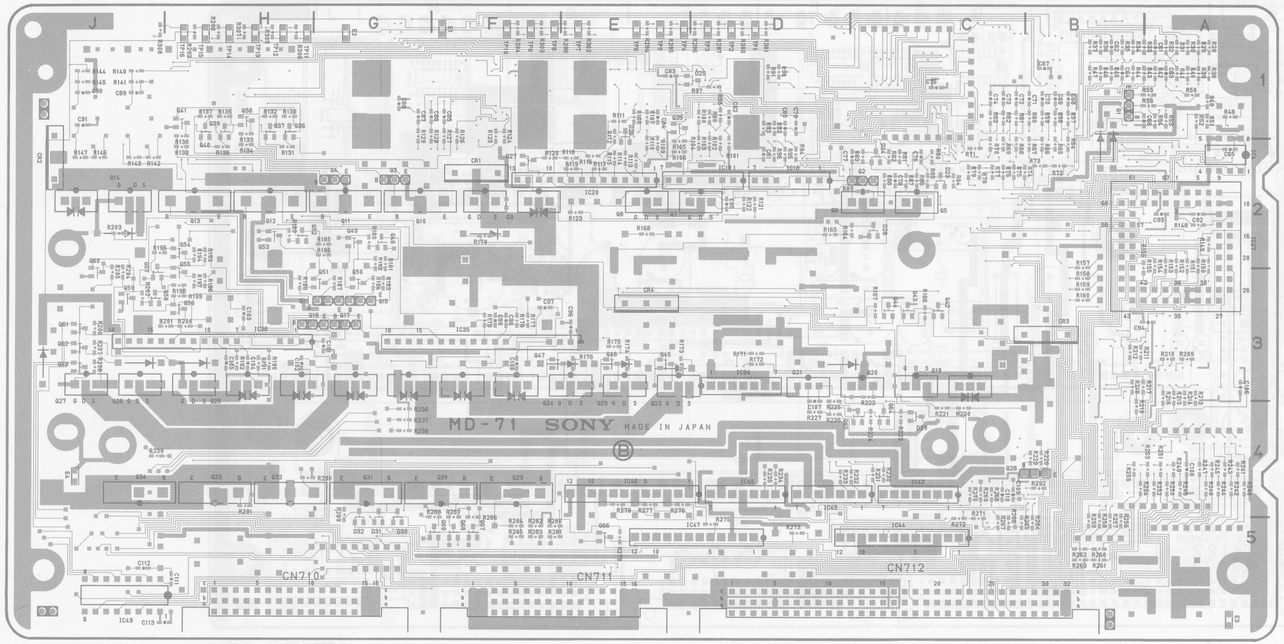

1-639-122-12 B SIDE

MD-71 (1-639-122-12)

DVR-2000
DVR-2100

CNI27	A2	IC6	C1	Q12	H2	Q68	*F5
		IC7	D1	Q13	H2	Q69	*F5
CN710	H5	IC8	B2	Q14	J2		
CN711	E5	IC9	C2	Q15	G3	RB1	C1
CN712	C5	IC10	C2	Q16	G3	RB2	C1
		IC11	D1	Q17	G3	RB3	C2
		IC12	D1	Q18	G3	RB4	B3
		IC13	E1	Q19	C3	RB5	A4
CR3	B3	IC14	D2	Q20	C3	RB6	A4
CR4	E3	IC15	D1	Q21	D3	RB7	A5
		IC16	E1	Q22	E3	RB8	B5
D1	B2	IC17	E1	Q23	E3	RB9	G5
D2	B2	IC18	D2	Q24	E3	RB10	G5
D3	F2	IC19	D2	Q25	H3		
D4	J2	IC20	E2	Q26	J3	TP1	D1
D5	E2	IC21	F1	Q27	J3	TP2	D1
D6	F2	IC22	F1	Q28	B4	TP3	D1
D7	J2	IC23	G1	Q29	F4	TP4	E1
D8	C3	IC24	H1	Q30	F4	TP5	E1
D9	D3	IC25	J1	Q31	G4	TP6	E1
D10	D3	IC26	J1	Q32	H4	TP7	E1
D11	E3	IC27	A2	Q33	H4	TP8	F1
D12	E3	IC28	A3	Q34	J4	TP9	F1
D13	F3	IC29	A3	Q35	*E1	TP10	F1
D14	F3	IC30	B3	Q36	*H1	TP11	H1
D15	G3	IC31	A3	Q37	*H1	TP12	H1
D16	G3	IC32	B3	Q38	*H1	TP13	H1
D17	H3	IC33	B3	Q39	*H1	TP14	H1
D18	H3	IC34	D3	Q40	*H2	TP15	H1
D19	H3	IC35	F3	Q41	*H1	TP16	H1
D20	J3	IC36	H3	Q42	*C3		
D21	J3	IC37	A4	Q43	*C3	*: B SIDE	
D22	D5	IC38	A4	Q44	*C3		
D23	*C2	IC39	B5	Q45	*E3		
D24	*C2	IC40	C5	Q46	*E3		
D25	*D1	IC41	C5	Q47	*F3		
D26	*E1	IC42	C4	Q48	*G2		
D27	*F2	IC43	D4	Q49	*G2		
D28	*C2	IC44	C5	Q50	*G3		
D29	*C4	IC45	D4	Q51	*G3		
D30	*G5	IC46	E4	Q52	*H2		
D31	*G5	IC47	D5	Q53	*H2		
D32	*G5	IC48	J5	Q54	*H2		
		IC49	J5	Q55	*H3		
E1	E1			Q56	*H3		
E2	G1	Q1	B1	Q57	*J3		
		Q2	C2	Q58	*H3		
E4	J4	Q3	G2	Q59	*J3		
		Q4	G2	Q60	*J2		
FB1	B3	Q5	C2	Q61	*J3		
		Q6	D2	Q62	*J3		
IC1	A1	Q7	D2	Q63	*J3		
IC2	A1	Q8	E2	Q64	*C4		
IC3	A1	Q9	F2	Q65			
IC4	A2	Q10	F2	Q66	*E5		
IC5	A2	Q11	G2	Q67	*F5		

20-23 (b)

CARD RACK MD-71 BOARD MD-71 BOARD CARD RACK

MD-71 BOARD (1-639-122-11)

DVR-2000	DVR-2100
J: S/N 10001 through 10199	J: S/N 10001 through 10699
UC: S/N 10001 through 10199	UC: S/N 10001 through 10699
EK: S/N 10001 through 10399	EK: S/N 10001 through 10699

MD-71 (1-639-122-11)

DVR-2000
DVR-2100

CNI27	A2	IC4	A2	Q8	E2	Q62	*J3
		IC5	A2	Q9	F2	Q63	*J3
CN710	H5	IC6	C1	Q10	F2	Q64	*C4
CN711	E5	IC7	D1	Q11	G2	Q65	*D4
CN712	C5	IC8	B2	Q12	H2	Q66	*E5
		IC9	C2	Q13	H2	Q67	*F5
CR1	F2	IC10	C2	Q14	J2	Q68	*F5
CR2	J2	IC11	D1	Q15	G3	Q69	*F5
CR3	B3	IC12	D1	Q16	G3		
CR4	E3	IC13	E1	Q17	G3	RB1	C1
		IC14	D2	Q18	G3	RB2	C1
D1	B2	IC15	D1	Q19	C3	RB3	C2
D2	B2	IC16	E1	Q20	C3	RB4	B3
D3	F2	IC17	E1	Q21	D3	RB5	A4
D4	J2	IC18	D2	Q22	E3	RB6	A4
D5	E2	IC19	D2	Q23	E3	RB7	A5
D6	F2	IC20	E2	Q24	E3	RB8	B5
D7	J2	IC21	F1	Q25	H3	RB9	G5
D8	C3	IC22	F1	Q26	J3	RB10	G5
D9	D3	IC23	G1	Q27	J3		
D10	D3	IC24	H1	Q28	B4	TP1	D1
D11	E3	IC25	J1	Q29	F4	TP2	D1
D12	E3	IC26	J1	Q30	F4	TP3	D1
D13	F3	IC27	A2	Q31	G4	TP4	E1
D14	F3	IC28	A3	Q32	H4	TP5	E1
D15	G3	IC29	A3	Q33	H4	TP6	E1
D16	G3	IC30	B3	Q34	J4	TP7	E1
D17	H3	IC31	A3	Q35	*E1	TP8	F1
D18	H3	IC32	B3	Q36	*H1	TP9	F1
D19	H3	IC33	B3	Q37	*H1	TP10	F1
D20	J3	IC34	D3	Q38	*H1	TP11	H1
D21	J3	IC35	F3	Q39	*H1	TP12	H1
D22	D5	IC36	H3	Q40	*H2	TP13	H1
D23	*C2	IC37	A4	Q41	*H1	TP14	H1
D24	*C2	IC38	A4	Q42	*C3	TP15	H1
D25	*D1	IC39	B5	Q43	*C3	TP16	H1
D26	*E1	IC40	C5	Q44	*C3		
D27	*F2	IC41	C5	Q45	*E3	* : B SIDE	
D28	*C2	IC42	C4	Q46	*E3		
D29	*C4	IC43	D4	Q47	*F3		
D30	*G5	IC44	C5	Q48	*G2		
D31	*G5	IC45	D4	Q49	*G2		
D32	*G5	IC46	E4	Q50	*G3		
		IC47	D5	Q51	*G3		
E1	E1	IC48	J5	Q52	*H2		
E2	G1	IC49	J5	Q53	*H2		
E3	A5			Q54	*H2		
E4	J4	Q1	B1	Q55	*H3		
		Q2	C2	Q56	*H3		
FB1	B3	Q3	G2	Q57	*J3		
		Q4	G2	Q58	*H3		
IC1	A1	Q5	C2	Q59	*J3		
IC2	A1	Q6	D2	Q60	*J2		
IC3	A1	Q7	D2	Q61	*J3		

A Side

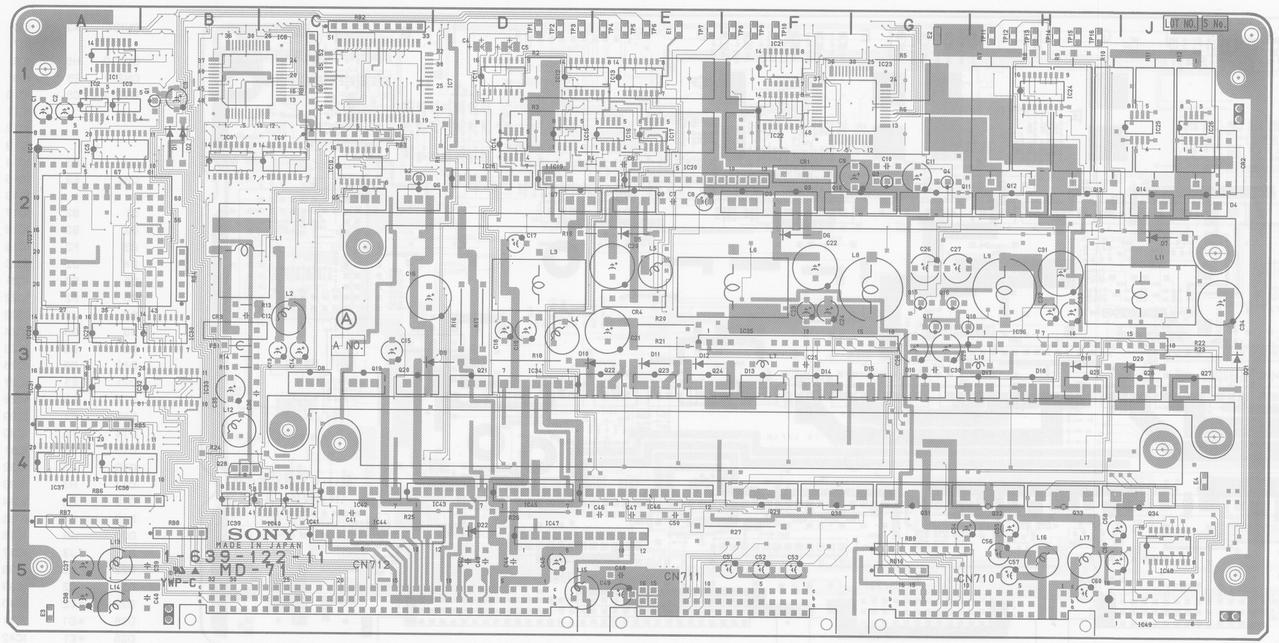

1-639-122-11 A SIDE

20-22 (a)

CARD RACK **MD-71 BOARD**

MD-71 BOARD (1-639-122-11)

DVR-2000	DVR-2100
J: S/N 10001 through 10199	J: S/N 10001 through 10699
UC: S/N 10001 through 10199	UC: S/N 10001 through 10699
EK: S/N 10001 through 10399	EK: S/N 10001 through 10699

B Side

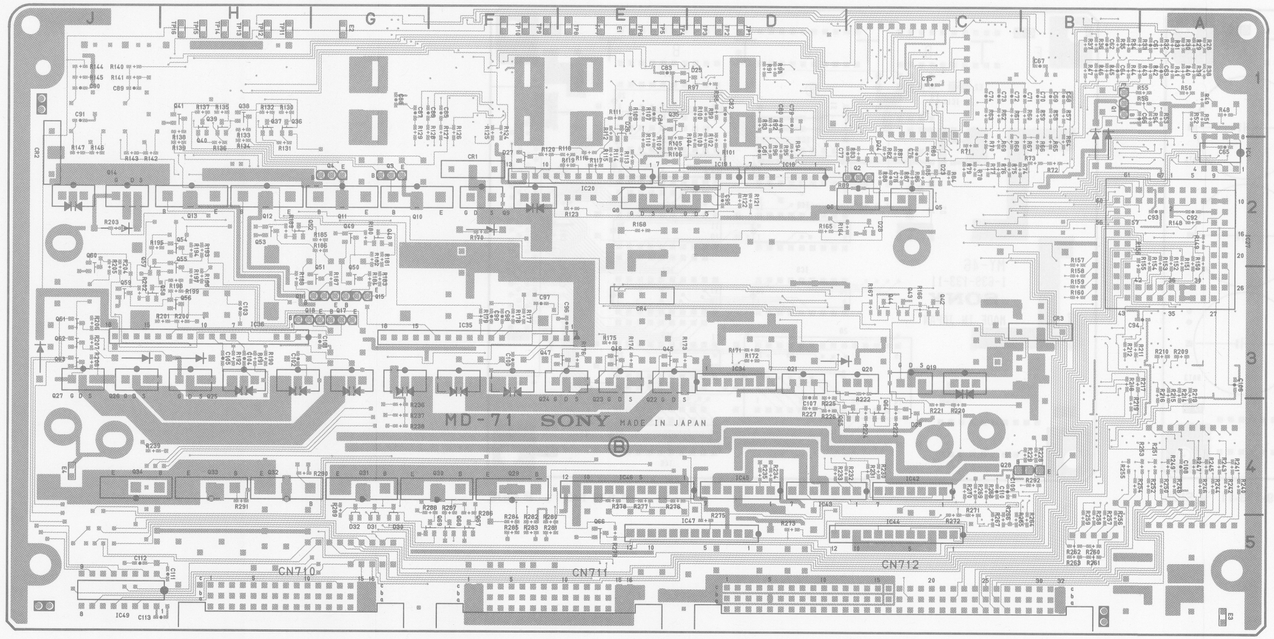

1-639-122-11 B SIDE

MD-71 (1-639-122-11)

DVR-2000
DVR-2100

CN127	A2	IC4	A2	Q8	E2	Q62	*J3
		IC5	A2	Q9	F2	Q63	*J3
CN710	H5	IC6	C1	Q10	F2	Q64	*C4
CN711	E5	IC7	D1	Q11	G2	Q65	*D4
CN712	C5	IC8	B2	Q12	H2	Q66	*E5
		IC9	C2	Q13	H2	Q67	*F5
CR1	F2	IC10	C2	Q14	J2	Q68	*F5
CR2	J2	IC11	D1	Q15	G3	Q69	*F5
CR3	B3	IC12	D1	Q16	G3		
CR4	E3	IC13	E1	Q17	G3	RB1	C1
		IC14	D2	Q18	G3	RB2	C1
D1	B2	IC15	D1	Q19	C3	RB3	C2
D2	B2	IC16	E1	Q20	C3	RB4	B3
D3	F2	IC17	E1	Q21	D3	RB5	A4
D4	J2	IC18	D2	Q22	E3	RB6	A4
D5	E2	IC19	D2	Q23	E3	RB7	A5
D6	F2	IC20	E2	Q24	E3	RB8	B5
D7	J2	IC21	F1	Q25	H3	RB9	G5
D8	C3	IC22	F1	Q26	J3	RB10	G5
D9	D3	IC23	G1	Q27	J3		
D10	D3	IC24	H1	Q28	B4	TP1	D1
D11	E3	IC25	J1	Q29	F4	TP2	D1
D12	E3	IC26	J1	Q30	F4	TP3	D1
D13	F3	IC27	A2	Q31	G4	TP4	E1
D14	F3	IC28	A3	Q32	H4	TP5	E1
D15	G3	IC29	A3	Q33	H4	TP6	E1
D16	G3	IC30	B3	Q34	J4	TP7	E1
D17	H3	IC31	A3	Q35	*E1	TP8	F1
D18	H3	IC32	B3	Q36	*H1	TP9	F1
D19	H3	IC33	B3	Q37	*H1	TP10	F1
D20	J3	IC34	D3	Q38	*H1	TP11	H1
D21	J3	IC35	F3	Q39	*H1	TP12	H1
D22	D5	IC36	H3	Q40	*H2	TP13	H1
D23	*C2	IC37	A4	Q41	*H1	TP14	H1
D24	*C2	IC38	A4	Q42	*C3	TP15	H1
D25	*D1	IC39	B5	Q43	*C3	TP16	H1
D26	*E1	IC40	C5	Q44	*C3		
D27	*F2	IC41	C5	Q45	*E3		
D28	*C2	IC42	C4	Q46	*E3		
D29	*C4	IC43	D4	Q47	*F3		
D30	*G5	IC44	C5	Q48	*G2		
D31	*G5	IC45	D4	Q49	*G2		
D32	*G5	IC46	E4	Q50	*G3		
		IC47	D5	Q51	*G3		
E1	E1	IC48	J5	Q52	*H2		
E2	G1	IC49	J5	Q53	*H2		
E3	A5			Q54	*H2		
E4	J4	Q1	B1	Q55	*H3		
		Q2	C2	Q56	*H3		
FB1	B3	Q3	G2	Q57	*J3		
		Q4	G2	Q58	*H3		
IC1	A1	Q5	C2	Q59	*J3		
IC2	A1	Q6	D2	Q60	*J2		
IC3	A1	Q7	D2	Q61	*J3		

*: B SIDE

20-23 (a)

MY-46 BOARD MY-46 BOARD

MY-46 BOARD (1-639-133-11)

MY-46 (1-639-133-11)

DVR-2000
DVR-2100

BT1	E2
BT2	E3
BT3	E4
CN1	A3
D1	D2
D2	D2
D3	D2
E1	A4
E2	D1
E3	D4
IC1	B1
IC2	B2
IC3	B2
IC4	B3
IC5	B3
IC6	B4
IC7	C2
IC8	C2
IC9	C3
IC10	C4
IC11	D1
JS1	D2
JW1	D2
JW2	D3
RB1	A2
RB2	A2
RB3	A3
RB4	A3
RB5	A4
RB6	A4
X1	C1

A Side

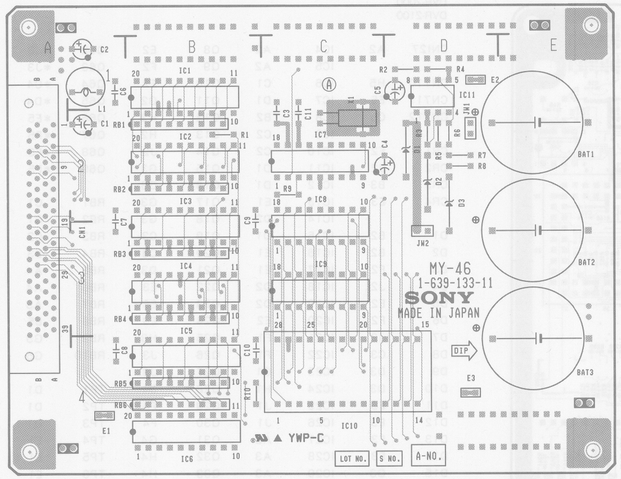

1-639-133-11 A SIDE

B Side

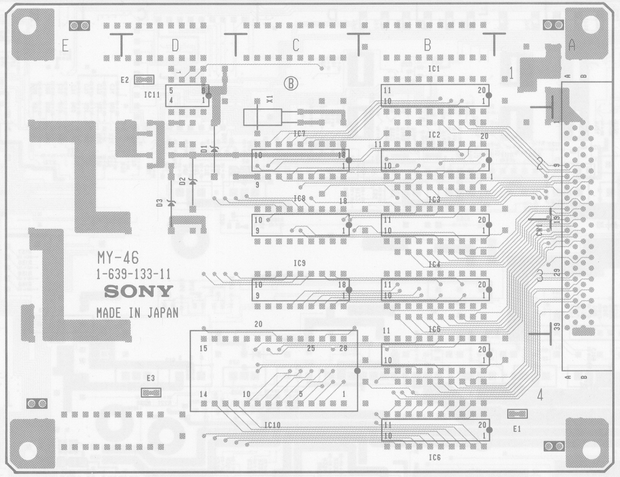

1-639-133-11 B SIDE

20-24 (b)

VIO-15 BOARD (1-639-126-13)

DVR-2000	DVR-2100
J ; S/N 10201 and higher	J ; S/N 10801 and higher
UC ; S/N 10301 and higher	UC ; S/N 11101 and higher
EK ; S/N 10601 and higher	EK ; S/N 11101 and higher

A Side

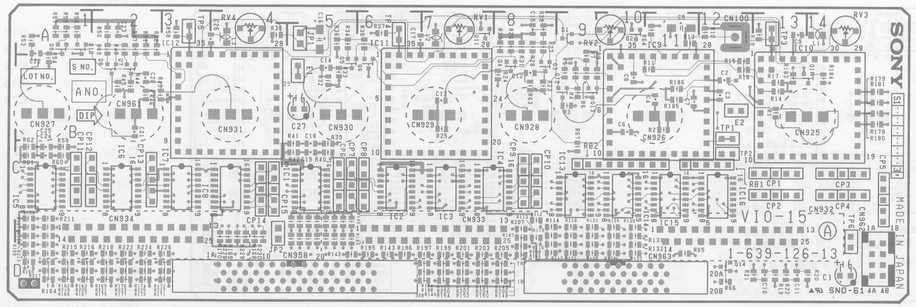

1-639-126-13 A SIDE

B Side

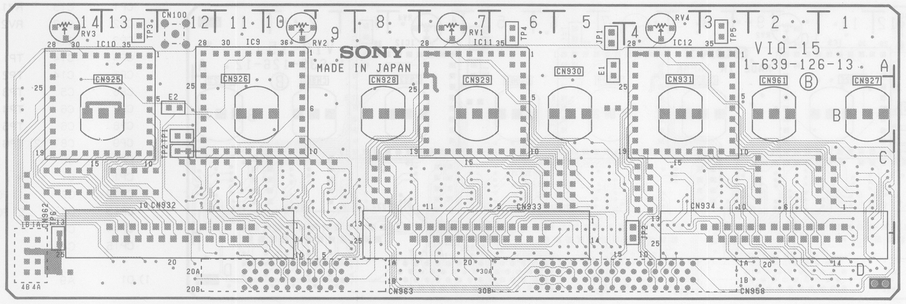

1-639-126-13 B SIDE

VIO-15 (1-639-126-13)

DVR-2000
DVR-2100

CN100	A12	JP1	A5
		JP2	D4
CN925	∗B13		
CN926	∗B11	Q1	B14
CN927	∗B1	Q2	A10
CN928	∗B8	Q3	B8
CN929	∗B7	Q4	B8
CN930	∗B5	Q5	B5
CN931	∗B4	Q6	B6
CN932	∗C12	Q7	B2
CN933	∗C6	Q8	B2
CN934	∗C3	Q9	A1
CN958	D4	Q10	A1
CN961	∗B2	Q11	A7
CN962	D14	Q12	B9
CN963	D11	Q13	B9
		Q14	D12
CP1	C13		
CP2	C13	RB1	C12
CP3	C14	RB2	C9
CP4	C14		
CP5	C14	RV1	A7
CP6	C5	RV2	A10
CP7	C5	RV3	A14
CP8	C6	RV4	A4
CP9	C8		
CP10	C8	TP1	B12
CP11	C1	TP2	C12
CP12	C2	TP3	A13
CP13	C2	TP4	A6
CP14	C4	TP5	A3
CP15	C4	TP6	D14
D1	A9	∗ : B SIDE	
E1	B5		
E2	B12		
IC1	C5		
IC2	C6		
IC3	C7		
IC4	C8		
IC5	C1		
IC6	C2		
IC7	C3		
IC8	C4		
IC9	A11		
IC10	A14		
IC11	A6		
IC12	A3		
IC13	C9		
IC14	C10		
IC15	C11		
IC16	C12		

VIO-15 BOARD (1-639-126-12)

DVR-2000	DVR-2100
J ; S/N 10201 through 10199	J ; S/N 10601 through 10799
UC ; S/N 10201 through 10299	UC ; S/N 10601 through 11099
EK ; S/N 10301 through 10599	EK ; S/N 10601 through 11099

A Side

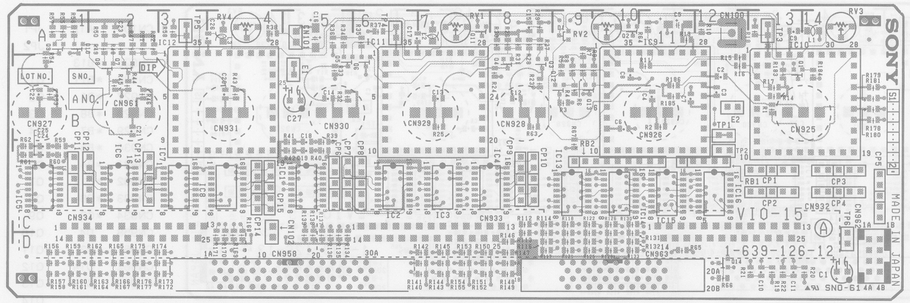

1-639-126-12 A SIDE

B Side

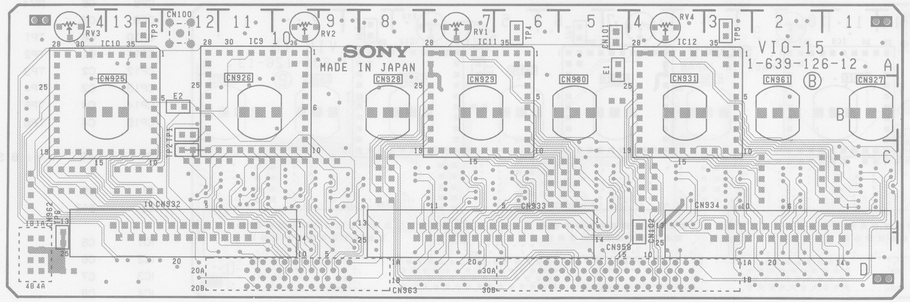

1-639-126-12 B SIDE

VIO-15 (1-639-126-11, 12)

DVR-2000
DVR-2100

	CNI9	A11	IC12	A3
	CNI10	A14	IC13	C9
	CNI11	B6	IC14	C11
	CNI12	A3	IC15	C11
			IC16	C12
	CN100	A12		
	CN101	A5	Q1	B13
2)	CN102	D4	2) Q2	A10
			Q3	A8
	CN925	*B13	Q4	A8
	CN926	*B11	Q5	A5
	CN927	*B1	Q6	A6
	CN928	*B8	Q7	A2
	CN929	*B7	Q8	A2
	CN930	*B5	Q9	A1
	CN931	*B4	Q10	A2
	CN932	*C12	Q11	A7
	CN933	*C6	Q12	B9
	CN934	*C3	Q13	B9
	CN958	D4	Q14	D12
	CN961	*B2		
	CN962	C14	RB1	C12
	CN963	D11	RB2	C9
	CP1	C13	RV1	A7
	CP2	C13	RV2	A9
	CP3	C14		
	CP4	C14	TP1	B12
	CP5	C14	TP2	C12
	CP6	C5	TP3	A13
	CP7	C6	TP4	A6
	CP8	C6	TP5	A3
	CP9	C8	2) TP6	D14
	CP10	C8		
	CP11	C1	* : B SIDE	
	CP12	C2	1) FOR SUFFIX-11	
	CP13	C3	2) FOR SUFFIX-12	
	CP14	C4		
	CP15	C4		
1)	D1	A9		
1)	E1	A5		
1)	E2	B12		
1)	IC1	C5		
1)	IC2	C7		
1)	IC3	C7		
1)	IC4	C8		
1)	IC5	C1		
1)	IC6	C2		
1)	IC7	C3		
1)	IC8	C4		
1)	IC9	A11		
	IC10	A14		
	IC11	B6		

VIO-15 BOARD, VIO-16 BOARD

VIO-16 BOARD (1-639-127-12)

DVR-2000	DVR-2100
J ; S/N 10201 and higher	J ; S/N 10601 and higher
UC ; S/N 10201 and higher	UC ; S/N 10601 and higher
EK ; S/N 10301 and higher	EK ; S/N 10601 and higher

A Side

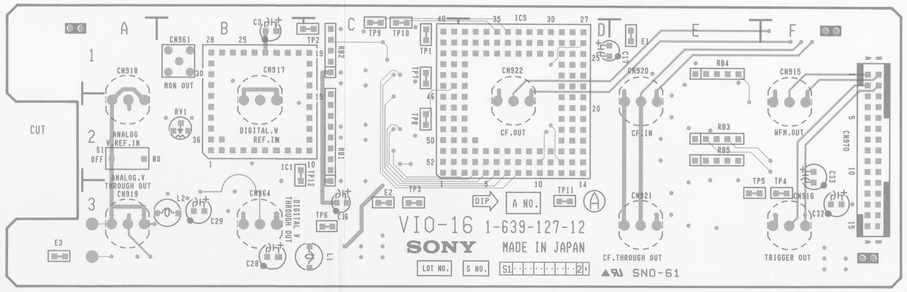

1-639-127-12 A SIDE

B Side

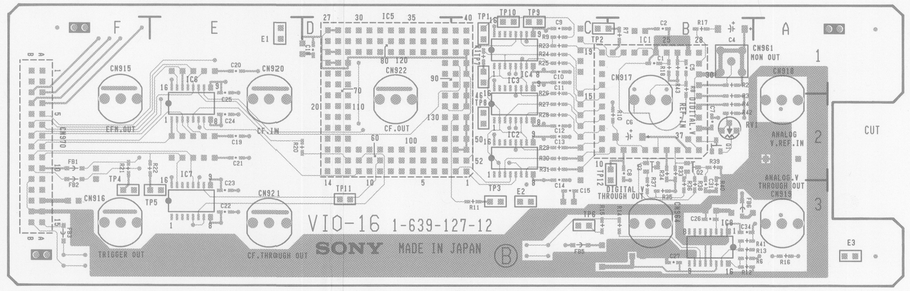

1-639-127-12 B SIDE

VIO-16 (1-639-127-11, 12)

DVR-2000
DVR-2100

	CNI1	B2	2) TP9	C1
	CNI5	D1	2) TP10	C1
			2) TP11	D3
	CN915	F1	2) TP12	B3
	CN916	F3		
	CN917	B1	* : B SIDE	
	CN918	A1	2) FOR SUFFIX-12	
	CN919	A3		
	CN920	E1		
	CN921	E3		
	CN922	D1		
	CN961	B1		
	CN964	B3		
	CN970	F2		
	E1	E1		
	E2	C3		
	E3	A3		
	FB1	*F2		
	FB2	*F3		
	FB3	*F3		
	FB5	*C3		
	FB6	*B3		
	IC1	B2		
	IC2	*C2		
	IC3	*C1		
	IC4	*C1		
	IC5	D1		
	IC6	*E1		
	IC7	*E2		
	IC8	*B3		
2)	Q1	*B2		
	Q2	*B2		
	Q3	*B2		
	RB1	C2		
	RB2	C1		
	RB3	E2		
	RB4	E1		
	RB5	E2		
	RV1	B2		
	S1	A2		
	TP1	C1		
	TP2	C1		
	TP3	C3		
	TP4	F3		
	TP5	E3		
	TP6	C3		
	TP7	C1		
2)	TP8	C2		

VIO-15 BOARD, VIO-16 BOARD

VIO-15 BOARD (1-639-126-11)

DVR-2000	DVR-2100
J ; S/N 10001 through 10199	J ; S/N 10001 through 10599
UC ; S/N 10001 through 10199	UC ; S/N 10001 through 10599
EK ; S/N 10001 through 10299	EK ; S/N 10001 through 10599

A Side

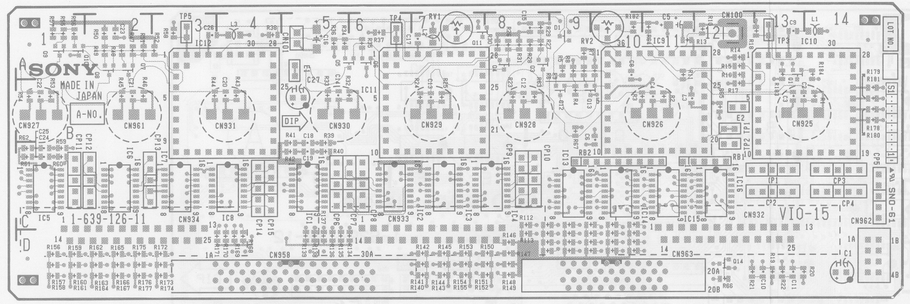

1-639-126-11 A SIDE

B Side

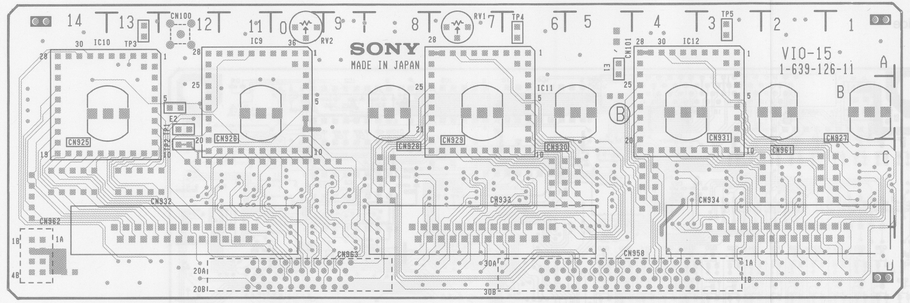

1-639-126-11 B SIDE

VIO-15 (1-639-126-11, 12)

DVR-2000
DVR-2100

	CNI9	A11	IC12	A3
	CNI10	A14	IC13	C9
	CNI11	B6	IC14	C11
	CNI12	A3	IC15	C11
			IC16	C12
	CN100	A12		
	CN101	A5	Q1	B13
2)	CN102	D4	2) Q2	A10
			Q3	A8
	CN925	∗B13	Q4	A8
	CN926	∗B11	Q5	A5
	CN927	∗B1	Q6	A6
	CN928	∗B8	Q7	A2
	CN929	∗B7	Q8	A2
	CN930	∗B5	Q9	A1
	CN931	∗B4	Q10	A2
	CN932	∗C12	Q11	A7
	CN933	∗C6	Q12	B9
	CN934	∗C3	Q13	B9
	CN958	D4	Q14	D12
	CN961	∗B2		
	CN962	C14	RB1	C12
	CN963	D11	RB2	C9
	CP1	C13	RV1	A7
	CP2	C13	RV2	A9
	CP3	C14		
	CP4	C14	TP1	B12
	CP5	C14	TP2	C12
	CP6	C5	TP3	A13
	CP7	C6	TP4	A6
	CP8	C6	TP5	A3
	CP9	C8	2) TP6	D14
	CP10	C8		
	CP11	C1	∗ : B SIDE	
	CP12	C2	1) FOR SUFFIX-11	
	CP13	C3	2) FOR SUFFIX-12	
	CP14	C4		
	CP15	C4		
1)	D1	A9		
1)	E1	A5		
1)	E2	B12		
1)	IC1	C5		
1)	IC2	C7		
1)	IC3	C7		
1)	IC4	C8		
1)	IC5	C1		
1)	IC6	C2		
1)	IC7	C3		
1)	IC8	C4		
1)	IC9	A11		
	IC10	A14		
	IC11	B6		

VIO-16 BOARD (1-639-127-11)

DVR-2000	DVR-2100
J ; S/N 10001 through 10199	J ; S/N 10001 through 10599
UC ; S/N 10001 through 10199	UC ; S/N 10001 through 10599
EK ; S/N 10001 through 10299	EK ; S/N 10001 through 10599

A Side

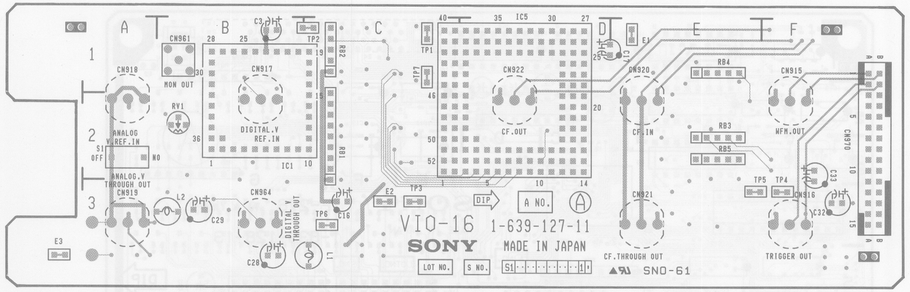

1-639-127-11 A SIDE

B Side

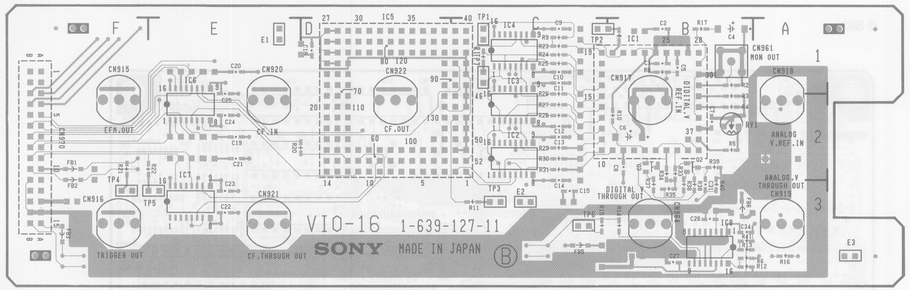

1-639-127-11 B SIDE

VIO-16 (1-639-127-11, 12)

DVR-2000
DVR-2100

	CNI1	B2	2) TP9	C1
	CNI5	D1	2) TP10	C1
			2) TP11	D3
	CN915	F1	2) TP12	B3
	CN916	F3		
	CN917	B1	∗ : B SIDE	
	CN918	A1	2) FOR SUFFIX-12	
	CN919	A3		
	CN920	E1		
	CN921	E3		
	CN922	D1		
	CN961	B1		
	CN964	B3		
	CN970	F2		
	E1	E1		
	E2	C3		
	E3	A3		
	FB1	∗F2		
	FB2	∗F3		
	FB3	∗F3		
	FB5	∗C3		
	FB6	∗B3		
	IC1	B2		
	IC2	∗C2		
	IC3	∗C1		
	IC4	∗C1		
	IC5	D1		
	IC6	∗E1		
	IC7	∗E2		
	IC8	∗B3		
2)	Q1	∗B2		
	Q2	∗B2		
	Q3	∗B2		
	RB1	C2		
	RB2	C1		
	RB3	E2		
	RB4	E1		
	RB5	E2		
	RV1	B2		
	S1	A2		
	TP1	C1		
	TP2	C1		
	TP3	C3		
	TP4	F3		
	TP5	E3		
	TP6	C3		
	TP7	C1		
2)	TP8	C2		

IF-276 BOARD (1-639-128-13)

DVR-2000	DVR-2100
J ; S/N 10201 and higher	J ; S/N 10801 and higher
UC ; S/N 10301 and higher	UC ; S/N 11101 and higher
EK ; S/N 10601 and higher	EK ; S/N 11101 and higher

IF-276 (1-639-128-13)

DVR-2000
DVR-2100

CN952	C6	Q21	* G4
CN960	G1	Q22	* G4
CN970	G1	Q23	* G4
CN971	G6	Q24	* G4
		Q25	* G4
E1	A1	Q26	* G4
		Q27	* G4
		Q28	* G4
E4	E6	Q29	* G4
		Q30	* G4
F1	G6	Q31	* G4
		Q32	* G4
FBI	G6	Q33	* G4
		Q34	* G4
IC1	A1	Q35	* G4
IC2	B1	Q36	* G4
IC3	C1	Q37	* G4
IC4	D1	Q38	* G4
IC5	A2		
IC6	B2	RB1	G1
IC7	E2	RB2	D2
IC8	F2	RB3	G3
IC9	A3	RB4	B6
IC10	B3	RB5	B6
IC11	C4	RB6	C5
IC12	E3	RB7	F5
IC13	F3	RB8	F6
IC14	A5	RB9	G5
IC16	A6	RB10	G6
IC17	A5	RB11	B6
IC19	A2		
IC20	A3	* : B SIDE	
IC22	A4		
JP1	G6		
Q1	* G2		
Q2	* G2		
Q3	* G2		
Q4	* G2		
Q5	* G2		
Q6	* G2		
Q7	* G2		
Q8	* G2		
Q9	* G2		
Q10	* E4		
Q11	* E4		
Q12	* E4		
Q13	* E4		
Q14	* E4		
Q15	* E4		
Q16	* F4		
Q17	* F4		
Q18	* F4		
Q19	* F4		
Q20	* G4		

A Side

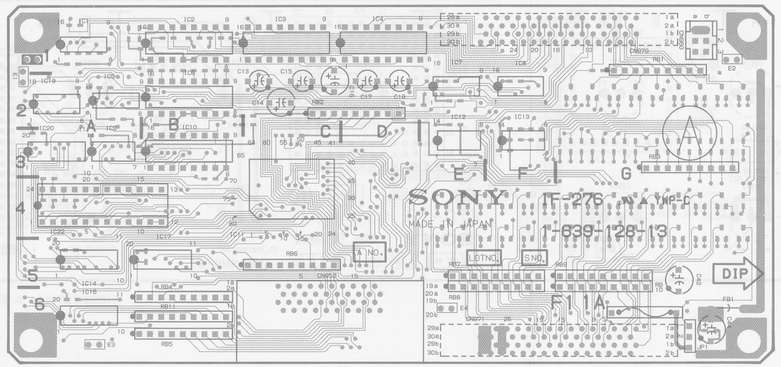

1-639-128-13 A SIDE

B Side

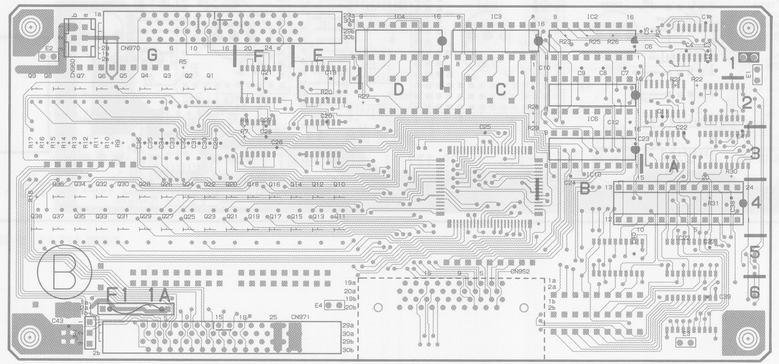

1-639-128-13 B SIDE

IF-276 BOARD

IF-276 BOARD (1-639-128-12)

DVR-2000	DVR-2100
J ; S/N 10001 through 10199	J ; S/N 10001 through 10799
UC ; S/N 10001 through 10199	UC ; S/N 10001 through 11099
EK ; S/N 10001 through 10299	EK ; S/N 10001 through 11099

IF-276 (1-639-128-12)

DVR-2000
DVR-2100

CN952	C5	Q17	* F4
CN960	G1	Q18	* F4
CN970	* G1	Q19	* F4
CN971	* E6	Q20	* G4
		Q21	* G4
E1	A2	Q22	* G4
E2	G1	Q23	* G4
E3	A6	Q24	* G4
E4	E6	Q25	* G4
		Q26	* G4
F1	G6	Q27	* G4
		Q28	* G4
FB1	G6	Q29	* G4
		Q30	* G4
IC1	A1	Q31	* G4
IC2	B1	Q32	* G4
IC3	C1	Q33	* G4
IC4	D1	Q34	* G4
IC5	A2	Q35	* G4
IC6	B1	Q36	* G4
IC7	E1	Q37	* G4
IC8	F1	Q38	* G4
IC9	A3		
IC10	B3	RB1	G1
IC11	B4	RB2	C2
IC12	E2	RB3	G3
IC13	F2	RB4	B5
IC14	A4	RB5	B6
IC15	B4	RB6	C5
IC16	A4	RB7	E5
IC17	B4	RB8	E6
IC18	A6	RB9	G5
IC19	A1	RB10	G6
IC20	A3	RB11	B6
IC21	A4		
		* : B SIDE	
JP1	G6		
JS1	G6		
Q1	* G2		
Q2	* G2		
Q3	* G2		
Q4	* G2		
Q5	* G2		
Q6	* G2		
Q7	* G2		
Q8	* G2		
Q9	* G2		
Q10	* E4		
Q11	* E4		
Q12	* E4		
Q13	* E4		
Q14	* E4		
Q15	* E4		
Q16	* F4		

A Side

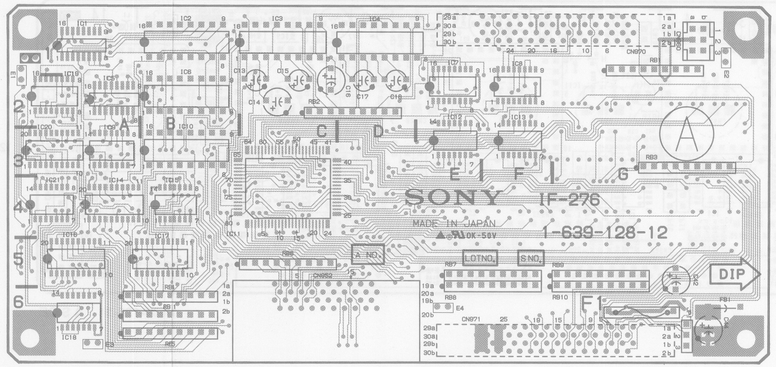

1-639-128-12 A SIDE

B Side

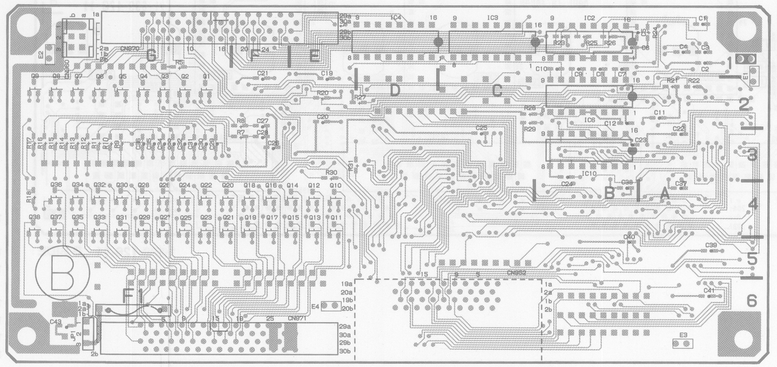

1-639-128-12 B SIDE

ASW-22 BOARD (1-639-131-11)

A Side

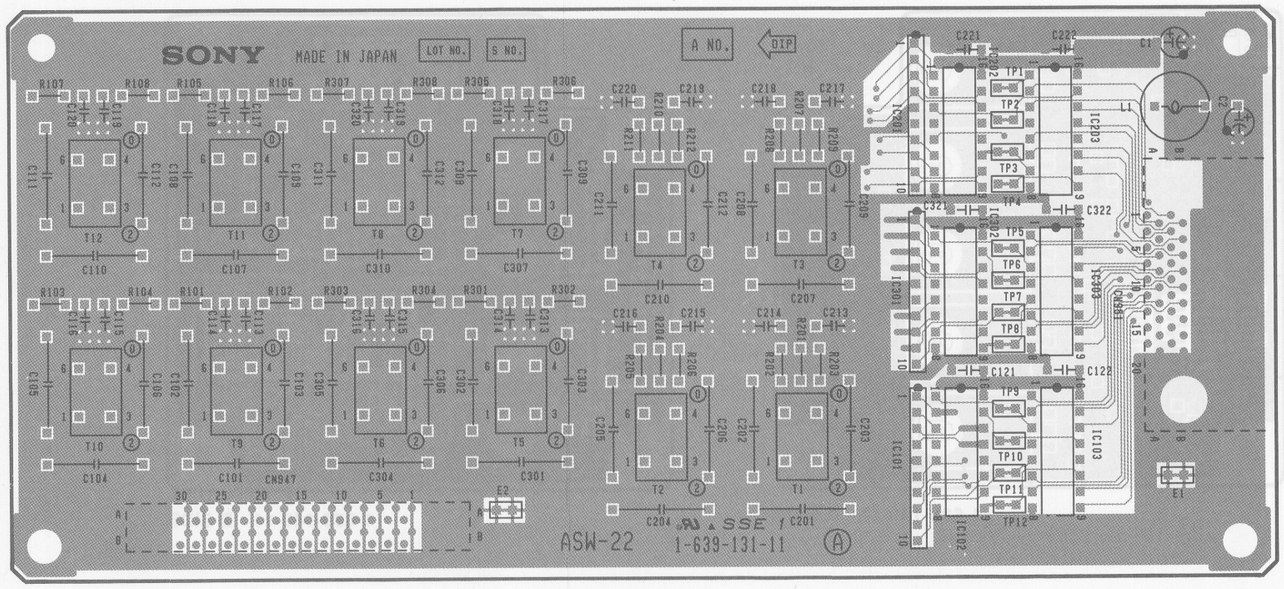

1-639-131-11 A SIDE

B Side

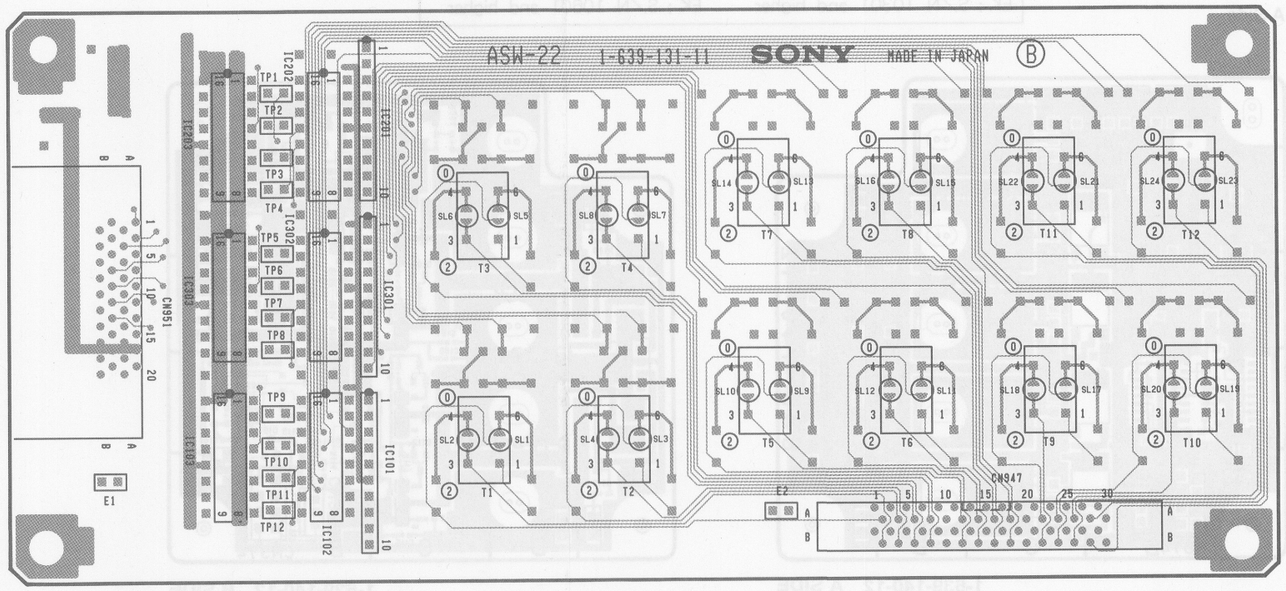

1-639-131-11 B SIDE

20-27

PD-49 BOARD (1-639-140-11)

DVR-2000	DVR-2100
J ; S/N 10001 through 10199	J ; S/N 10001 through 10599
UC ; S/N 10001 through 10199	UC ; S/N 10001 through 10599
EK ; S/N 10001 through 10299	EK ; S/N 10001 through 10599

PD-49 (1-639-140-11, 12)

DVR-2000
DVR-2100

CN374	B5	Q101	*B3
CN378	E4	Q102	*B3
CN379	A2	Q103	B3
CN388	B5	Q104	C2
		Q105	C3
D101	*B3	Q106	C2
2) D102	C3	Q111	*B5
2) D103	B2	Q112	*B4
D111	B4	Q113	B5
2) D112	C5	Q114	C4
2) D113	C4	Q115	C5
D151	*B4	Q116	C4
2) D201	B2	Q201	C2
		2) Q202	B2
1) E101	D2		
1) E102	D5	TP101	E2
E201	A3	TP102	E5
		1) TP201	A2
IC101	A4		
IC102	B4	*: B SIDE	
IC103	A3	1) FOR SUFFIX-11	
IC201	B1	2) FOR SUFFIX-12	
JP101	A5		
2) JP102	A5		

A Side

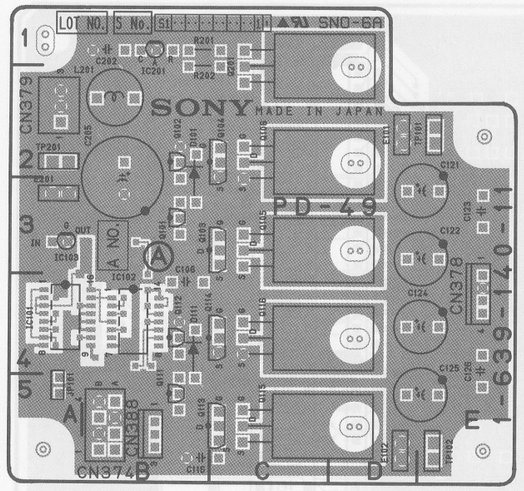

1-639-140-11 A SIDE

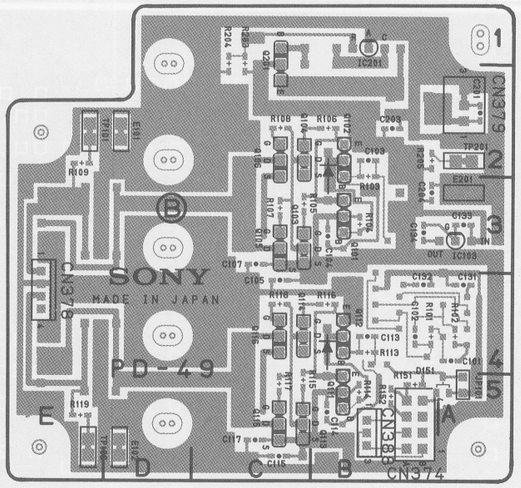

1-639-140-11 B SIDE

PD-49 BOARD (1-639-140-12)

DVR-2000	DVR-2100
J ; S/N 10201 and higher	J ; S/N 10601 and higher
UC ; S/N 10201 and higher	UC ; S/N 10601 and higher
EK ; S/N 10301 and higher	EK ; S/N 10601 and higher

PD-49 (1-639-140-11, 12)

DVR-2000
DVR-2100

CN374	B5	Q101	*B3
CN378	E4	Q102	*B3
CN379	A2	Q103	B3
CN388	B5	Q104	C2
		Q105	C3
D101	*B3	Q106	C2
2) D102	C3	Q111	*B5
2) D103	B2	Q112	*B4
D111	B4	Q113	B5
2) D112	C5	Q114	C4
2) D113	C4	Q115	C5
D151	*B4	Q116	C4
2) D201	B2	Q201	C2
		2) Q202	B2
1) E101	D2		
1) E102	D5	TP101	E2
E201	A3	TP102	E5
		1) TP201	A2
IC101	A4		
IC102	B4	*: B SIDE	
IC103	A3	1) FOR SUFFIX-11	
IC201	B1	2) FOR SUFFIX-12	
JP101	A5		
2) JP102	A5		

A Side

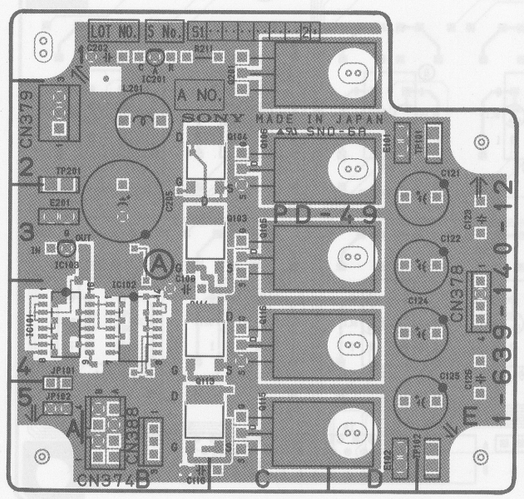

1-639-140-12 A SIDE

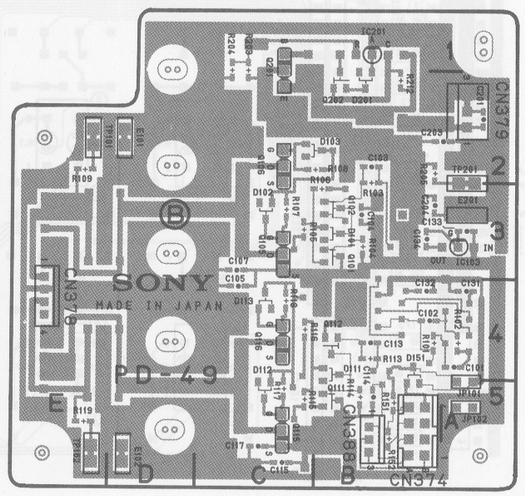

1-639-140-12 B SIDE

POWER SUPPLY FU-53, CT-133, RE-52

FU-53, CT-133, RE-52 POWER SUPPLY

FU-53 BOARD (1-639-463-11)

DVR-2100
J ; S/N 10001 through 10299
UC ; S/N 10001 through 10299
EK ; S/N 10001 through 10299

COMPONENT Side

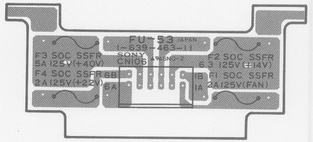

1-639-463-11 COMPONENT SIDE

FU-53 BOARD (1-639-463-12)

DVR-2000	DVR-2100
J ; S/N 10001 and higher	J ; S/N 10301 and higher
UC ; S/N 10001 and higher	UC ; S/N 10301 and higher
EK ; S/N 10001 and higher	EK ; S/N 10301 and higher

COMPONENT Side

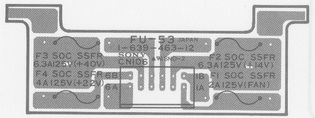

1-639-463-12 COMPONENT SIDE

CT-133 BOARD (1-639-628-11)

A Side

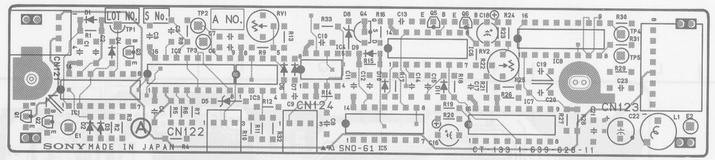

1-639-628-11 A SIDE

B Side

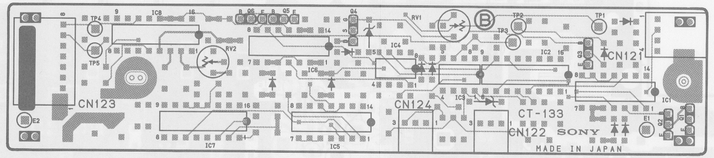

1-639-628-11 B SIDE

RE-52 BOARD (1-630-525-11)

COMPONENT Side

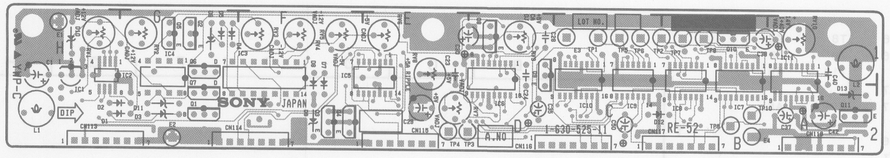

1-630-525-11 COMPONENT SIDE

SOLDER Side

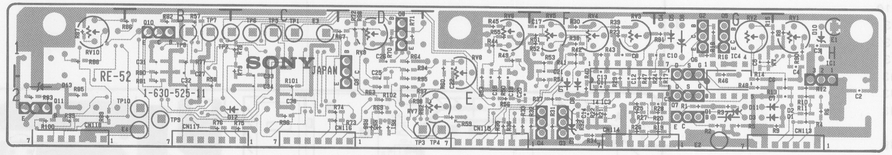

1-630-525-11 SOLDER SIDE

RE-52 (1-630-525-11)

DVR-2000
DVR-2100

CN113	H2	RV5	F1
CN114	G2	RV6	E1
CN115	E2	RV7	D2
CN116	D2	RV8	E1
CN117	C2	RV9	D1
CN118	A2	RV10	A1
D1	H2	TP1	C1
D2	H2	TP2	C1
D3	G2	TP3	E2
D4	G1	TP5	C1
D5	G1	TP6	C1
D6	G1	TP7	B1
D7	F1	TP8	B1
D8	F1	TP10	B2
D9	F2		
D10	H1		
D11	G2		
D12	C2		
D13	A2		
D14	E1		
E1	H1		
E2	G2		
E3	C1		
IC1	H2		
IC2	G1		
IC3	F1		
IC4	G1		
IC5	F1		
IC6	D2		
IC7	B2		
IC8	B2		
IC9	C2		
IC10	C2		
IC11	A1		
Q1	G2		
Q2	G1		
Q3	F2		
Q4	F2		
Q5	G1		
Q6	G1		
Q7	G2		
Q8	D1		
Q9	D1		
Q10	B1		
Q11	A2		
RV1	H1		
RV2	G1		
RV3	F1		
RV4	F1		

20-29

PS-256 POWER SUPPLY

POWER SUPPLY PS-256

PS-256 BOARD (1-639-630-12)

DVR-2000	DVR-2100
J ; S/N 10201 and higher	J ; S/N 10801 and higher
UC ; S/N 10401 and higher	UC ; S/N 11101 and higher
EK ; S/N 10701 and higher	EK ; S/N 11101 and higher

A Side

PS-256 (1-639-630-11, 12)

DVR-2000
DVR-2100

CN103	B7	D114	H6	T8	K9
CN104	R1	D115	N6	T9	P9
CN105	S1			T10	R9
CN106	N2	FB101	G7		
CN107	T1	FB102	G7	VDR1	A6
CN108	R1				
CN109	D5	F1	D6		
CN110	C4	F2	E7		
CN111	K10				
CN112	Q10	IC1	G10		
CN113	U2	IC2	J10		
CN114	S2	IC3	K10		
CN115	R2	IC4	M10		
CN116	P2	IC5	N10		
CN117	N2	IC6	P10		
CN118	M2	IC7	J10		
CN119	M4	IC101	P3		
CN120	J10	IC102	P3		
		IC103	P3		
CP1	Q10	IC104	Q3		
CP101	G6	IC105	U3		
CP103	K6	IC106	N3		
CP104	K6				
CP105	M6	Q1	G9		
CP106	N6	Q2	H9		
CP107	P6	Q3	K9		
CP108	P6	Q4	M9		
CP109	R6	Q5	N9		
CP110	R6	Q6	P9		
CP111	S6	Q7	R10		
		Q8	R9		
D1	C5	Q101	J7		
D2	D6	Q102	R3		
D3	R10	Q103	S3		
D4	R10	Q104	S3		
D5	R10	Q105	T3		
D6	R10	Q106	U3		
D7	R10	Q110	Q5		
D8	T8	Q111	Q4		
D9	Q9	Q112	R4		
D10	D5	Q113	Q1		
D101	G7	Q114	P4		
D102	G7				
D103	J7	RY1	D5		
D104	L7	RY2	B4		
D105	L7	RY3	C6		
D106	N7				
D107	P7	T1	G10		
D108	Q7	T2	J10		
D109	Q7	T3	K10		
D110	R7	T4	M10		
D111	S7	T5	N10		
D112	G6	T6	P10		
D113	H6	T7	G9		

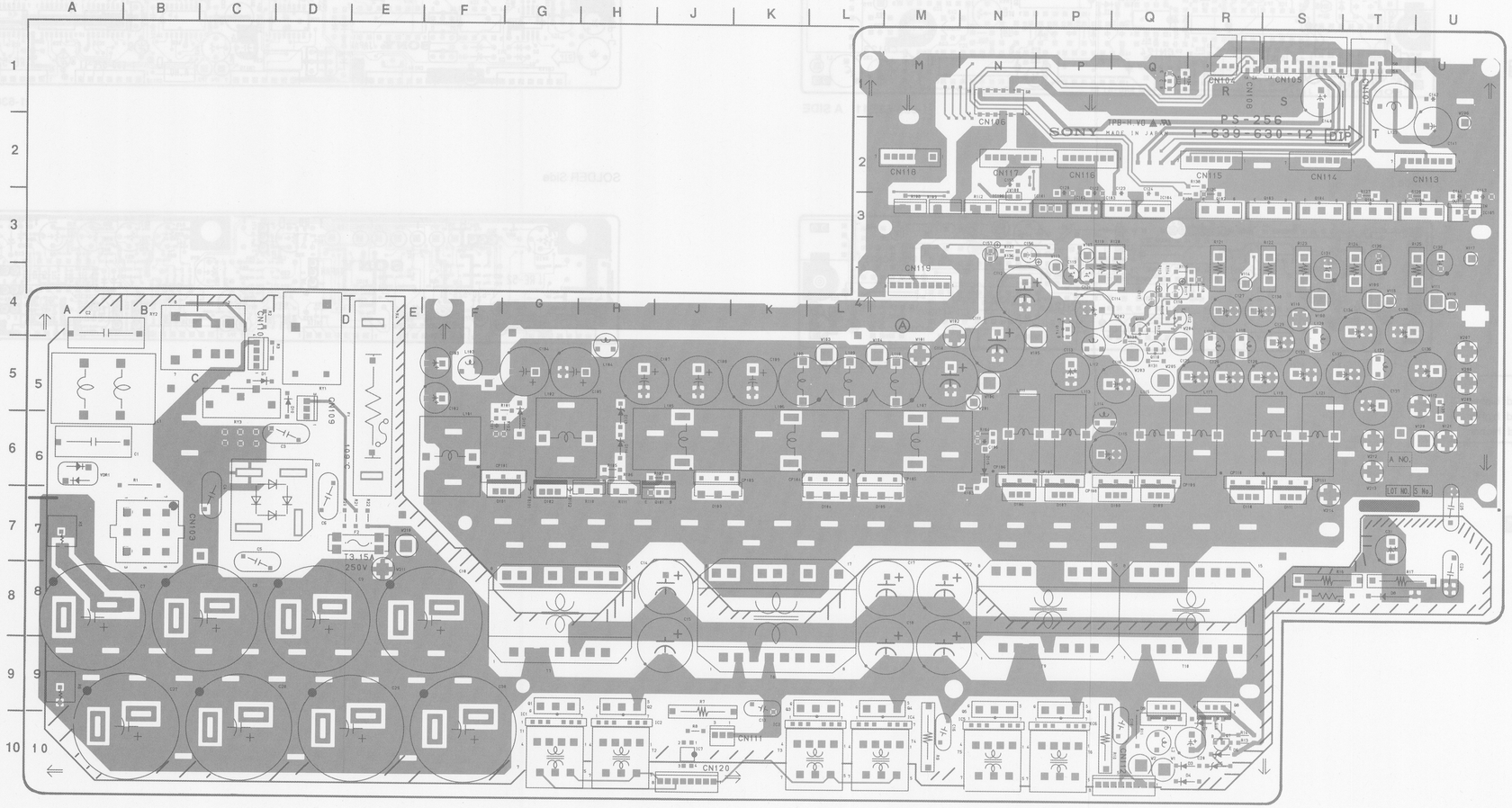

20-30 (b)

POWER SUPPLY PS-256

PS-256 POWER SUPPLY

PS-256 BOARD (1-639-630-12)

B Side

DVR-2000	DVR-2100
J ; S/N 10201 and higher	J ; S/N 10801 and higher
UC ; S/N 10401 and higher	UC ; S/N 11101 and higher
EK ; S/N 10701 and higher	EK ; S/N 11101 and higher

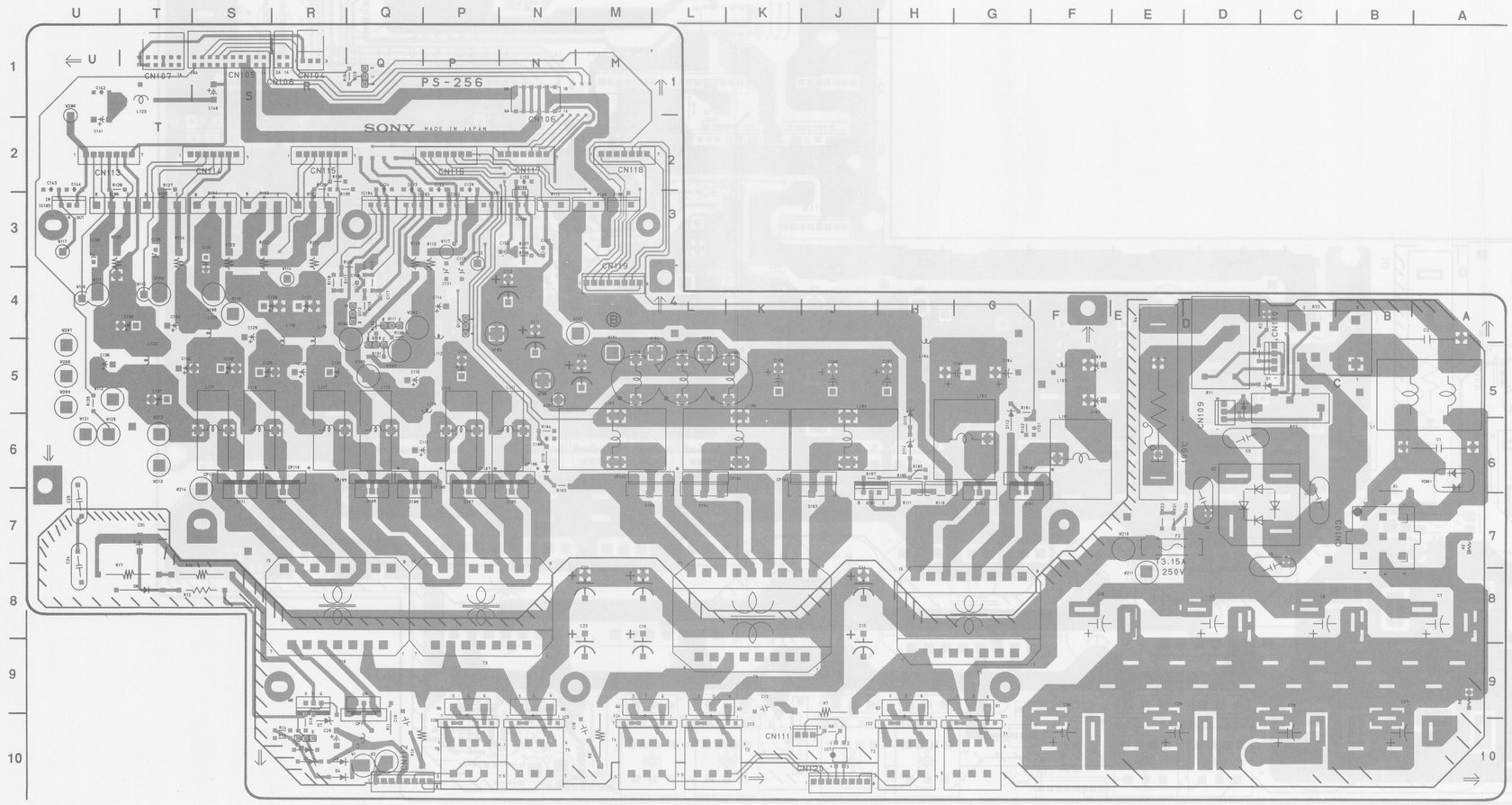

PS-256 (1-639-630-11, 12)

DVR-2000
DVR-2100

CN103	B7	D114	H6	T8	K9
CN104	R1	D115	N6	T9	P9
CN105	S1			T10	R9
CN106	N2	FB101	G7		
CN107	T1	FB102	G7	VDR1	A6
CN108	R1				
CN109	D5	F1	D6		
CN110	C4	F2	E7		
CN111	K10				
CN112	Q10	IC1	G10		
CN113	U2	IC2	J10		
CN114	S2	IC3	K10		
CN115	R2	IC4	M10		
CN116	P2	IC5	N10		
CN117	N2	IC6	P10		
CN118	M2	IC7	J10		
CN119	M4	IC101	P3		
CN120	J10	IC102	P3		
		IC103	P3		
CP1	Q10	IC104	Q3		
CP101	G6	IC105	U3		
CP103	K6	IC106	N3		
CP104	K6				
CP105	M6	Q1	G9		
CP106	N6	Q2	H9		
CP107	P6	Q3	K9		
CP108	P6	Q4	M9		
CP109	R6	Q5	N9		
CP110	R6	Q6	P9		
CP111	S6	Q7	R10		
		Q8	R9		
D1	C5	Q101	J7		
D2	D6	Q102	R3		
D3	R10	Q103	S3		
D4	R10	Q104	S3		
D5	R10	Q105	T3		
D6	R10	Q106	U3		
D7	R10	Q110	Q5		
D8	T8	Q111	Q4		
D9	Q9	Q112	R4		
D10	D5	Q113	Q1		
D101	G7	Q114	P4		
D102	G7				
D103	J7	RY1	D5		
D104	L7	RY2	B4		
D105	L7	RY3	C6		
D106	N7				
D107	P7	T1	G10		
D108	Q7	T2	J10		
D109	Q7	T3	K10		
D110	R7	T4	M10		
D111	S7	T5	N10		
D112	G6	T6	P10		
D113	H6	T7	G9		

20-31 (b)

POWER SUPPLY PS-256

PS-256 BOARD (1-639-630-11)

DVR-2000	DVR-2100
J ; S/N 10001 through 10199	J ; S/N 10001 through 10799
UC ; S/N 10001 through 10399	UC ; S/N 10001 through 11099
EK ; S/N 10001 through 10699	EK ; S/N 10001 through 11099

A Side

PS-256 (1-639-630-11, 12)

DVR-2000
DVR-2100

CN103	B7	D114	H6	T8	K9
CN104	R1	D115	N6	T9	P9
CN105	S1			T10	R9
CN106	N2	FB101	G7		
CN107	T1	FB102	G7	VDR1	A6
CN108	R1				
CN109	D5	F1	D6		
CN110	C4	F2	E7		
CN111	K10				
CN112	Q10	IC1	G10		
CN113	U2	IC2	J10		
CN114	S2	IC3	K10		
CN115	R2	IC4	M10		
CN116	P2	IC5	N10		
CN117	N2	IC6	P10		
CN118	M2	IC7	J10		
CN119	M4	IC101	P3		
CN120	J10	IC102	P3		
		IC103	P3		
CP1	Q10	IC104	Q3		
CP101	G6	IC105	U3		
CP103	K6	IC106	N3		
CP104	K6				
CP105	M6	Q1	G9		
CP106	N6	Q2	H9		
CP107	P6	Q3	K9		
CP108	P6	Q4	M9		
CP109	R6	Q5	N9		
CP110	R6	Q6	P9		
CP111	S6	Q7	R10		
		Q8	R9		
D1	C5	Q101	J7		
D2	D6	Q102	R3		
D3	R10	Q103	S3		
D4	R10	Q104	S3		
D5	R10	Q105	T3		
D6	R10	Q106	U3		
D7	R10	Q110	Q5		
D8	T8	Q111	Q4		
D9	Q9	Q112	R4		
D10	D5	Q113	Q1		
D101	G7	Q114	P4		
D102	G7				
D103	J7	RY1	D5		
D104	L7	RY2	B4		
D105	L7	RY3	C6		
D106	N7				
D107	P7	T1	G10		
D108	Q7	T2	J10		
D109	Q7	T3	K10		
D110	R7	T4	M10		
D111	S7	T5	N10		
D112	G6	T6	P10		
D113	H6	T7	G9		

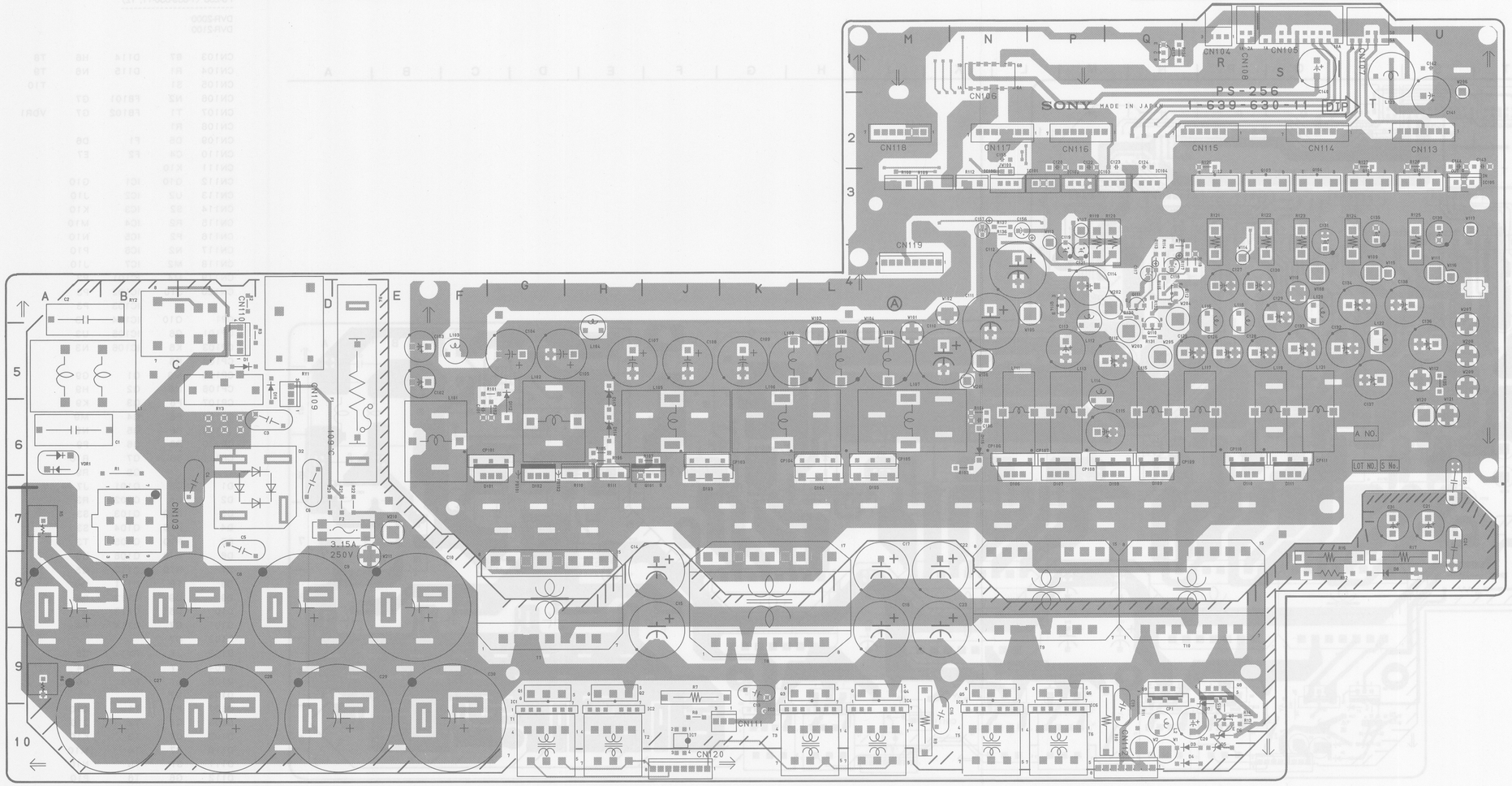

1-639-630-11 A SIDE

POWER SUPPLY PS-256

PS-256 POWER SUPPLY

PS-256 BOARD (1-639-630-11)

DVR-2000	DVR-2100
J ; S/N 10001 through 10199	J ; S/N 10001 through 10799
UC ; S/N 10001 through 10399	UC ; S/N 10001 through 10399
EK ; S/N 10001 through 10699	EK ; S/N 10001 through 11099

B Side

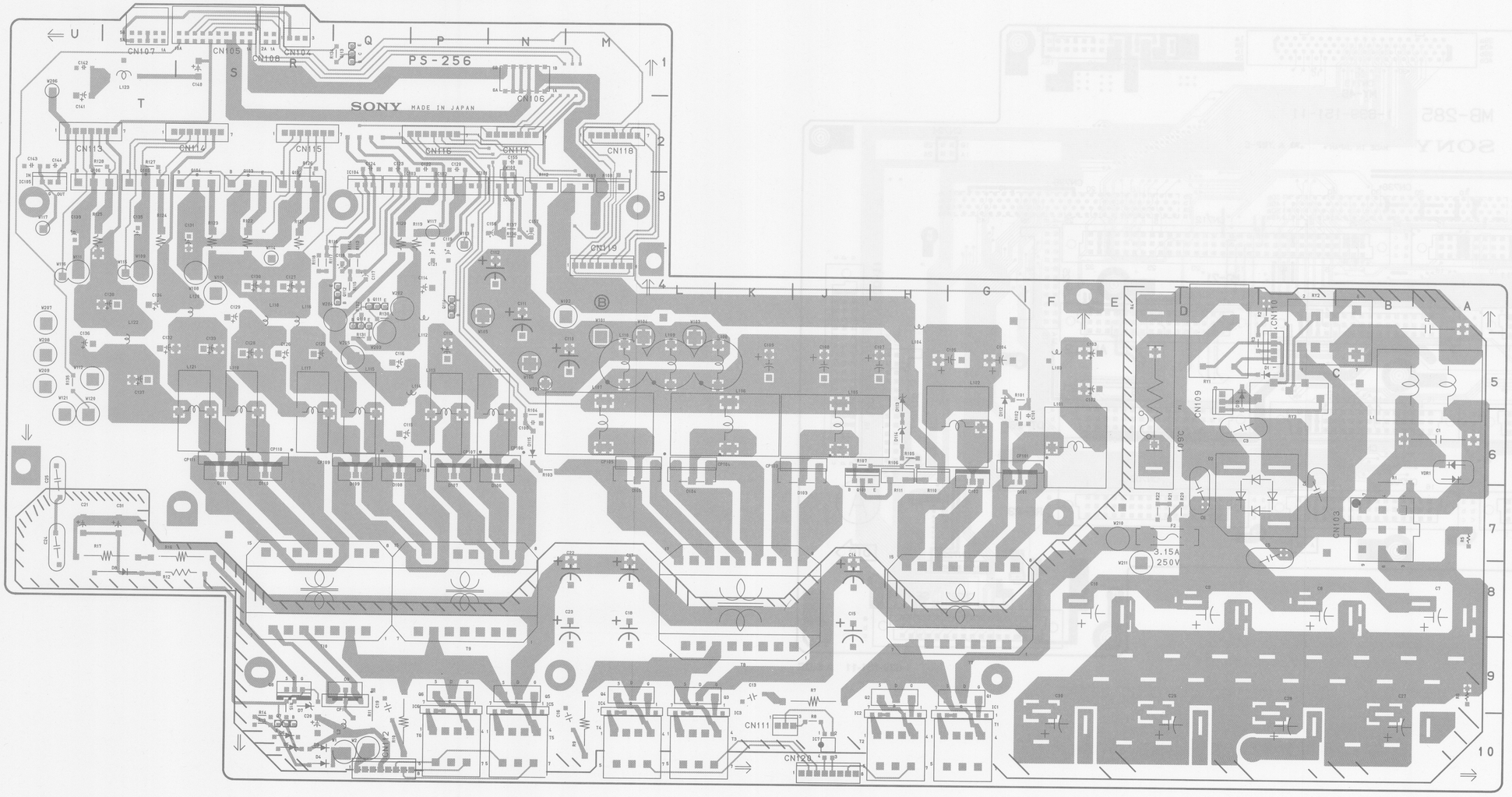

20-31 (a)

1-639-630-11 B SIDE

PS-256 (1-639-630-11, 12)

DVR-2000
DVR-2100

CN103	B7	D114	H6	T8	K9
CN104	R1	D115	N6	T9	P9
CN105	S1			T10	R9
CN106	N2	FB101	G7		
CN107	T1	FB102	G7	VDR1	A6
CN108	R1				
CN109	D5	F1	D6		
CN110	C4	F2	E7		
CN111	K10				
CN112	Q10	IC1	G10		
CN113	U2	IC2	J10		
CN114	S2	IC3	K10		
CN115	R2	IC4	M10		
CN116	P2	IC5	N10		
CN117	N2	IC6	P10		
CN118	M2	IC7	J10		
CN119	M4	IC101	P3		
CN120	J10	IC102	P3		
		IC103	P3		
CP1	Q10	IC104	Q3		
CP101	G6	IC105	U3		
CP103	K6	IC106	N3		
CP104	K6				
CP105	M6	Q1	G9		
CP106	N6	Q2	H9		
CP107	P6	Q3	K9		
CP108	P6	Q4	M9		
CP109	R6	Q5	N9		
CP110	R6	Q6	P9		
CP111	S6	Q7	R10		
		Q8	R9		
D1	C5	Q101	J7		
D2	D6	Q102	R3		
D3	R10	Q103	S3		
D4	R10	Q104	S3		
D5	R10	Q105	T3		
D6	R10	Q106	U3		
D7	R10	Q110	Q5		
D8	T8	Q111	Q4		
D9	Q9	Q112	R4		
D10	D5	Q113	Q1		
D101	G7	Q114	P4		
D102	G7				
D103	J7	RY1	D5		
D104	L7	RY2	B4		
D105	L7	RY3	C6		
D106	N7				
D107	P7	T1	G10		
D108	Q7	T2	J10		
D109	Q7	T3	K10		
D110	R7	T4	M10		
D111	S7	T5	N10		
D112	G6	T6	P10		
D113	H6	T7	G9		

20-31 (a)

CARD RACK MB-285 BOARD

MB-285 BOARD CARD RACK

MB-285 BOARD (1-639-151-11)

A Side

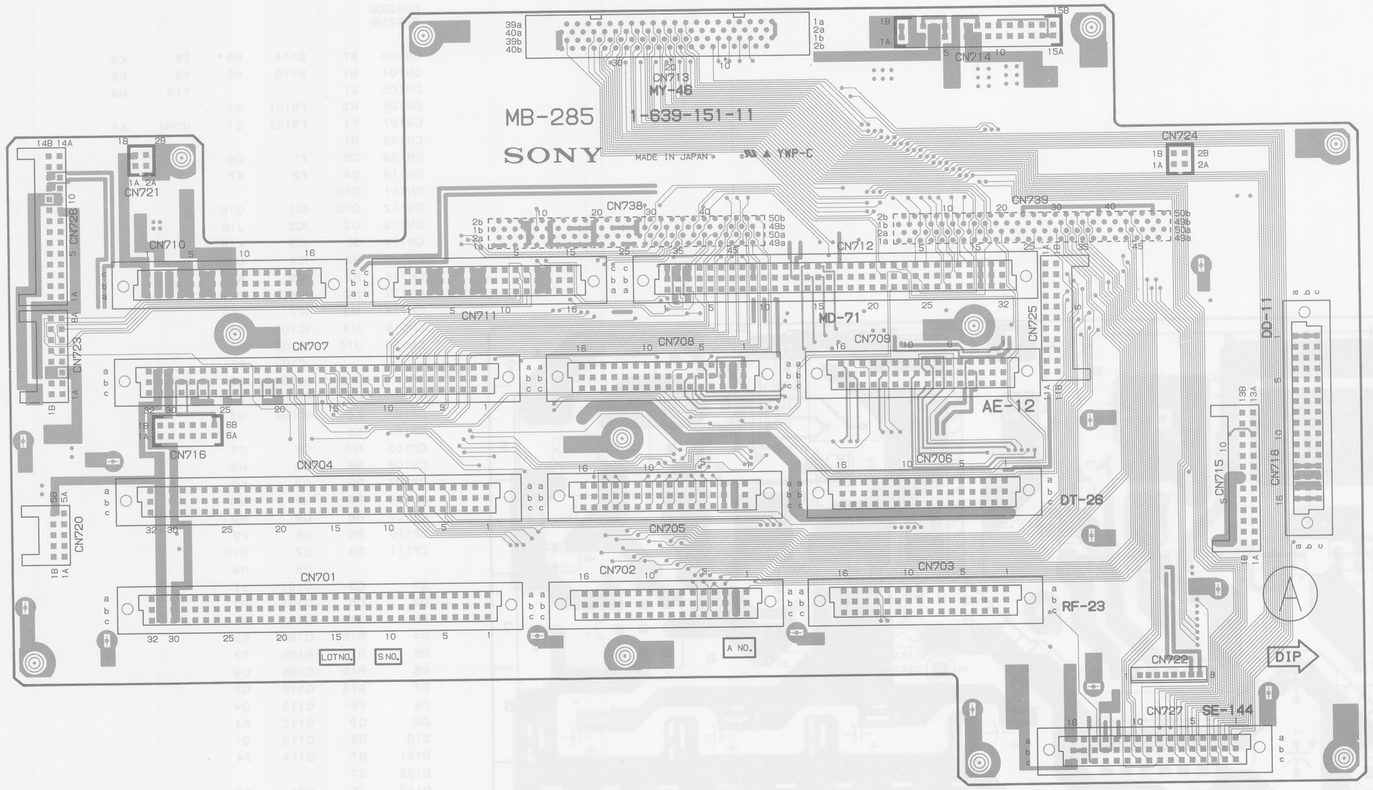

1-639-151-11 A SIDE

20-32

MB-285 BOARD (1-639-151-11)

B Side

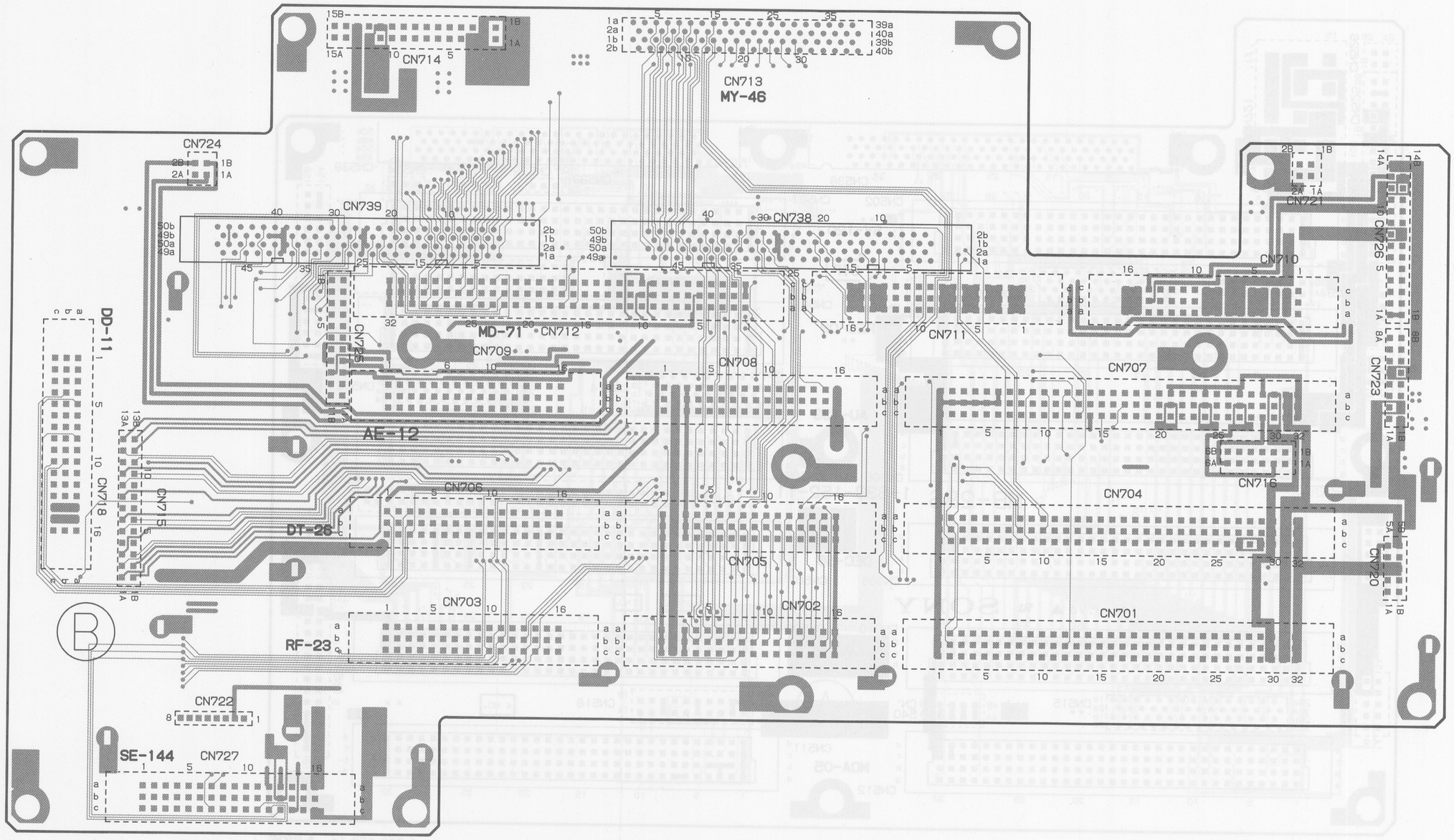

1-639-151-11 B SIDE

20-33

MB-286 BOARD (1-639-152-11)

A Side

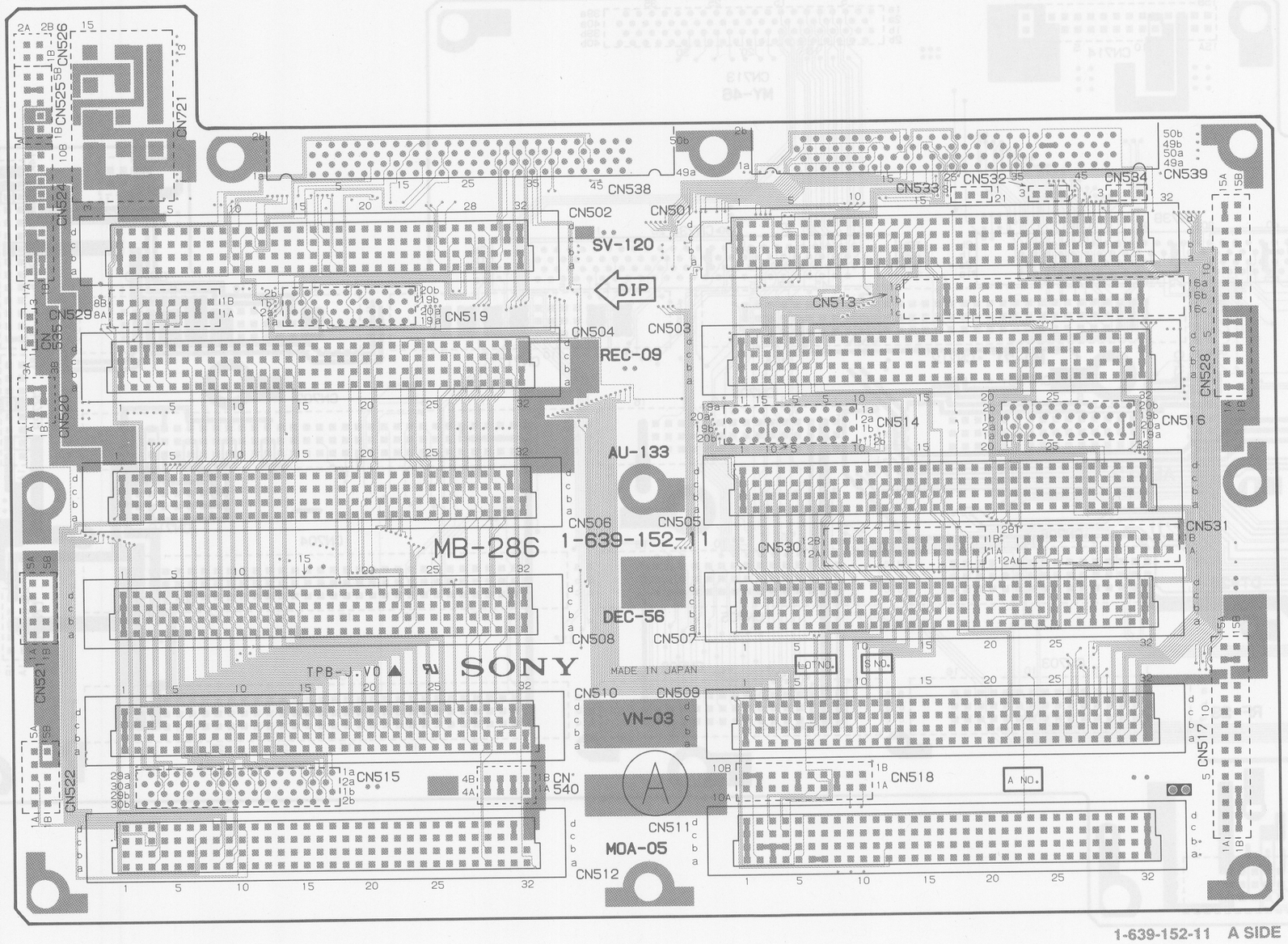

1-639-152-11 A SIDE

20-34

MB-286 BOARD (1-639-152-11)

B Side

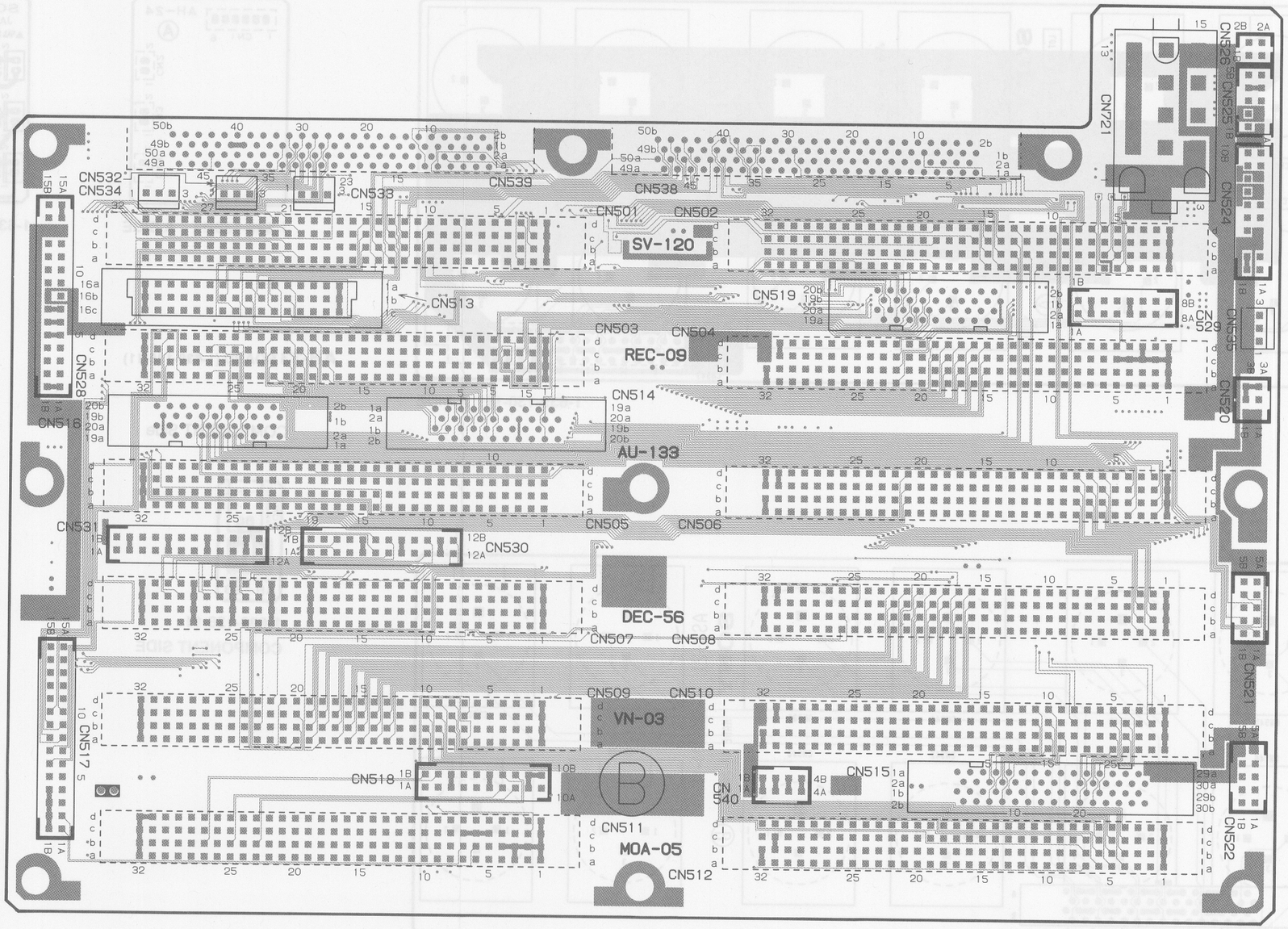

1-639-152-11 B SIDE

20-35

ASW-21 BOARD (1-639-130-11)

A Side

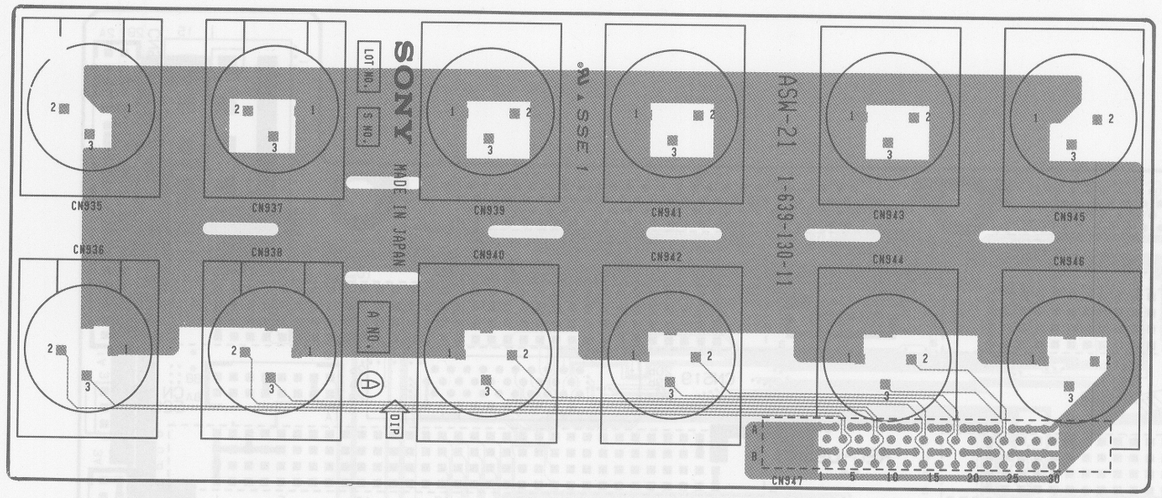

1-639-130-11 A SIDE

B Side

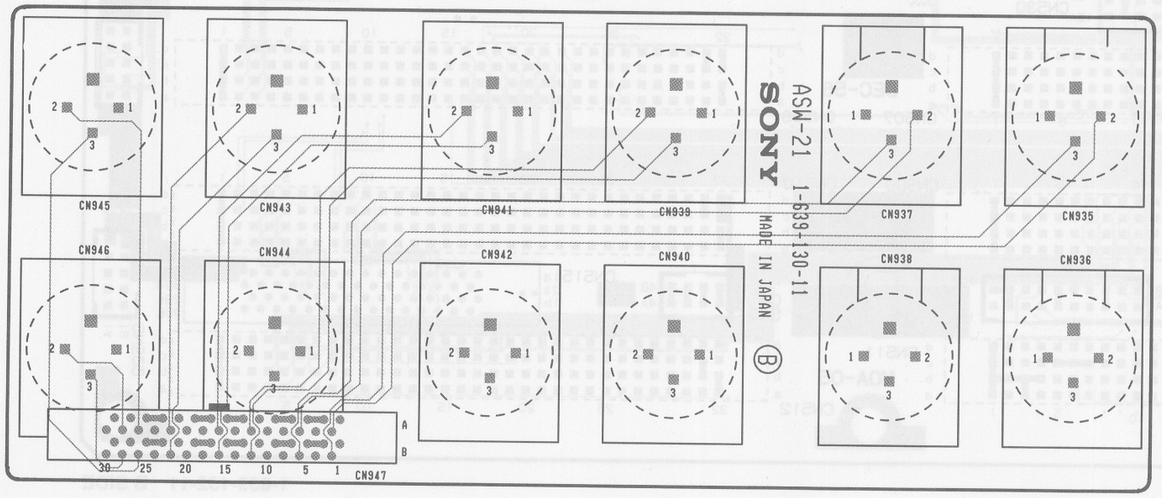

1-639-130-11 B SIDE

AH-24 BOARD (1-639-139-11)

A Side

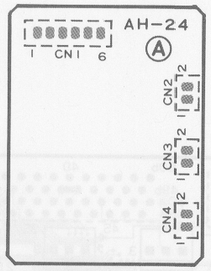

1-639-139-11 A SIDE

B Side

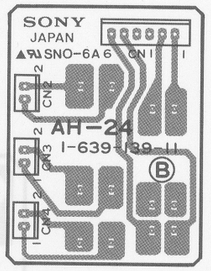

1-639-139-11 B SIDE

AH-33 BOARD (1-639-138-11)

COMPONENT Side

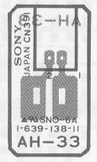

1-639-138-11
COMPONENT SIDE

20-36

FRAME WIRING CN-401, CN-481, CN-501, CN-512, CN-581, DE-34, DE-38, FP-33

CN-401, CN-481, CN-501, CN-512, CN-581, DE-34, DE-38, FP-33 **FRAME WIRING**

CN-401 BOARD (1-639-143-11)

A Side

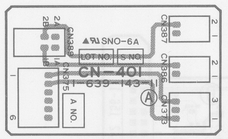

1-639-143-11 A SIDE

B Side

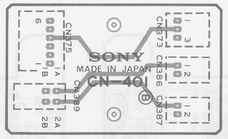

1-639-143-11 B SIDE

CN-481 BOARD (1-638-948-11)

A Side

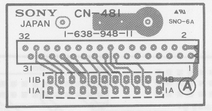

1-638-948-11 A SIDE

B Side

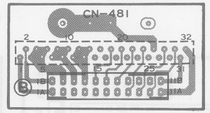

1-638-948-11 B SIDE

CN-501 BOARD (1-639-144-11)

A Side

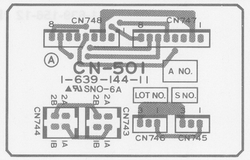

1-639-144-11 A SIDE

B Side

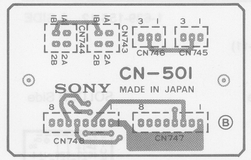

1-639-144-11 B SIDE

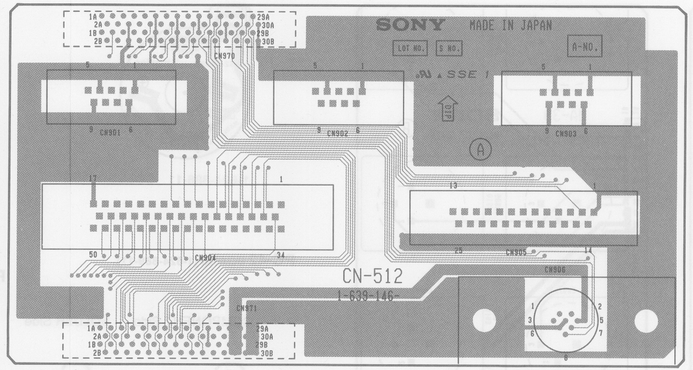

1-639-146-11, 12 A SIDE

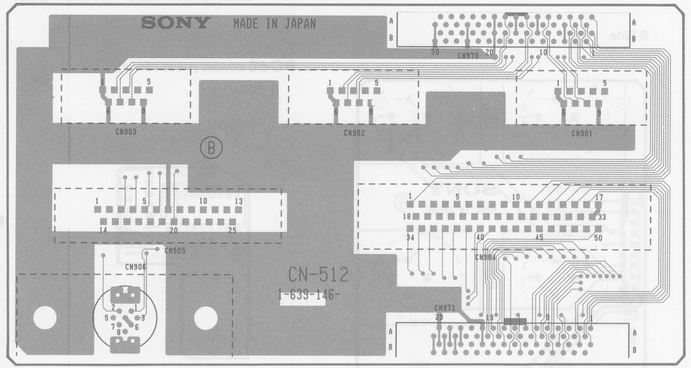

1-639-146-11, 12 B SIDE

CN-581 BOARD (1-639-148-11)

A Side

1-639-148-11
A SIDE

B Side

1-639-148-11
B SIDE

DE-34 BOARD (1-639-142-11, 12)

A Side

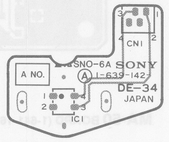

1-639-142-11, 12 A SIDE

DE-38 BOARD (1-639-147-11, 12)

A Side

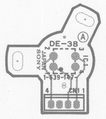

1-639-147-11, 12
A SIDE

B Side

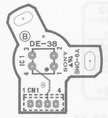

1-639-147-11, 12
B SIDE

FP-33 BOARD (1-639-136-11, 12)

A Side

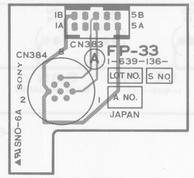

1-639-136-11, 12 A SIDE

B Side

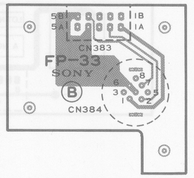

1-639-136-11, 12 B SIDE

20-37

LE-62 BOARD (1-624-888-11)

COMPONENT Side

1-624-888-11
COMPONENT SIDE

LE-77 BOARD (1-639-137-11)

A Side

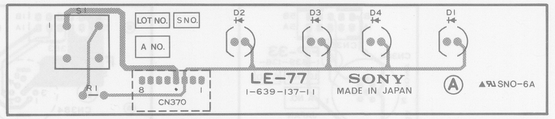

1-639-137-11 A SIDE

B Side

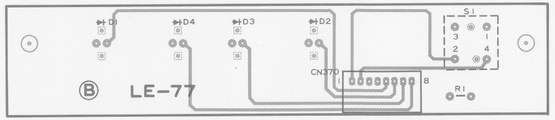

1-639-137-11 B SIDE

MA-39 BOARD (1-639-129-11)

A Side

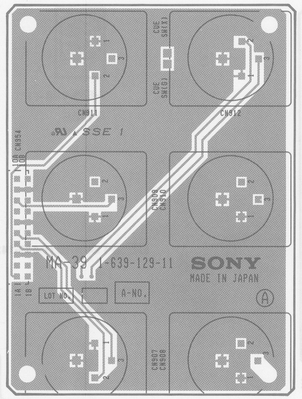

1-639-129-11 A SIDE

B Side

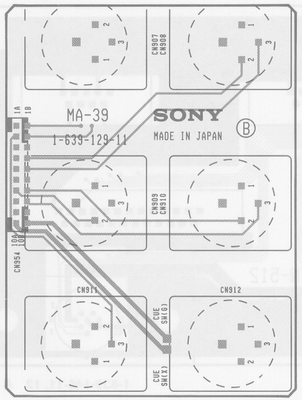

1-639-129-11 B SIDE

MA-50 BOARD (1-641-164-11)

A Side

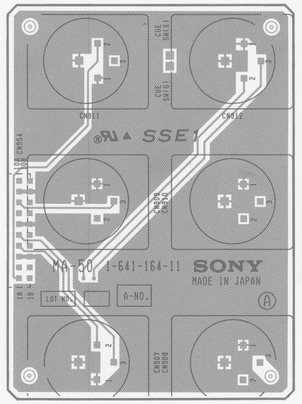

1-641-164-11 A SIDE

B Side

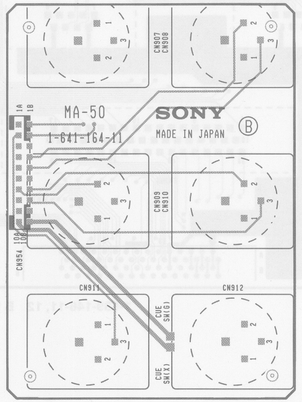

1-641-164-11 B SIDE

LE-62, LE-77, MA-39, MA-50, MT-47, PC-42, PA-142, PC-50, PC-51 FRAME WIRING

MT-47 BOARD (1-624-886-11)

COMPONENT Side

1-624-886-11 SOLDER SIDE

PC-42 BOARD (1-624-889-11)

COMPONENT Side SOLDER Side

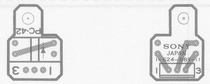

1-624-889-11
COMPONENT SIDE

1-624-889-11
SOLDER SIDE

PC-50 BOARD (1-630-528-11)

A Side

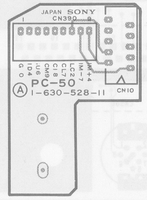

1-630-528-11 A SIDE

PA-142 BOARD (1-639-156-11)

DVR-2100
J ; S/N 10001 through 10199
UC ; S/N 10001 through 10199
EK ; S/N 10001 through 10199

A Side B Side

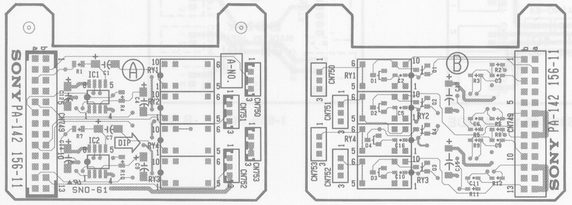

1-639-156-11 A SIDE 1-639-156-11 B SIDE

PA-142 BOARD (1-639-156-12)

DVR-2000	DVR-2100
J ; S/N 10001 and higher	J ; S/N 10201 and higher
UC ; S/N 10001 and higher	UC ; S/N 10201 and higher
EK ; S/N 10001 and higher	EK ; S/N 10201 and higher

A Side B Side

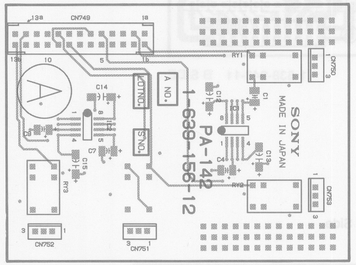

1-639-156-12 A SIDE

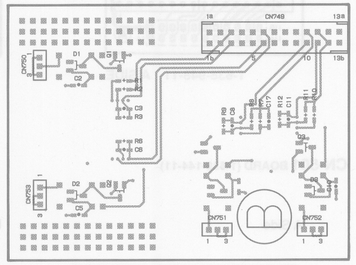

1-639-156-12 B SIDE

PC-51 BOARD (1-630-529-11)

COMPONENT Side SOLDER Side

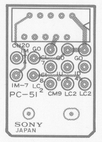

1-630-529-11
COMPONENT SIDE

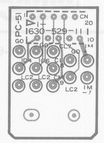

1-630-529-11
SOLDER SIDE

FRAME WIRING PC-52, PC-53, PC-54, PC-55, PC-60, PC-64, PE-18, TR-43, VR-106, VR-107

PC-52, PC-53, PC-54, PC-55, PC-60, PC-64, PE-18, TR-43, VR-106, VR-107 **FRAME WIRING**

PC-52 BOARD (1-630-530-11)

COMPONENT Side

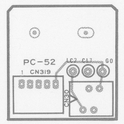

1-630-530-11
COMPONENT SIDE

PC-54 BOARD (1-630-532-11)

COMPONENT Side

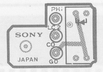

1-630-532-11
COMPONENT SIDE

PC-60 BOARD (1-639-141-11, 12)

A Side

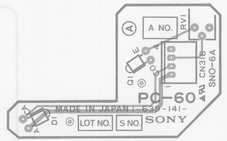

1-639-141-11, 12 A SIDE

PE-18 BOARD (1-620-916-11)

COMPONENT Side

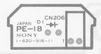

1-620-916-11
COMPONENT SIDE

VR-106 BOARD (1-639-134-12)

A Side

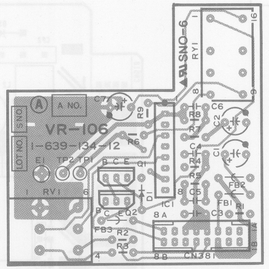

1-639-134-12 A SIDE

B Side

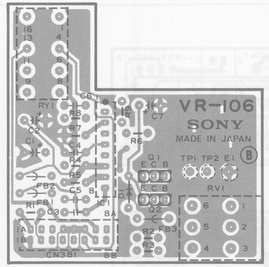

1-639-134-12 B SIDE

PC-53 BOARD (1-630-531-11)

SOLDER Side

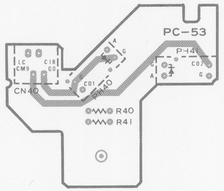

1-630-531-11 SOLDER SIDE

PC-55 BOARD (1-630-533-11)

SOLDER Side

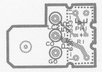

1-630-533-11
SOLDER SIDE

PC-64 BOARD (1-639-149-11)

A Side

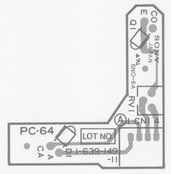

1-639-149-11 A SIDE

TR-43 BOARD (1-624-887-11)

COMPONENT Side

1-624-887-11
COMPONENT SIDE

VR-107 BOARD (1-639-135-11)

A Side

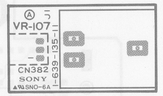

1-639-135-11 A SIDE

B Side

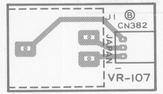

1-639-135-11 B SIDE

20-39

DET-11 BOARD (1-633-840-12)

DVR-2000	DVR-2100
J ; S/N 10001 through 10199	J ; S/N 10001 through 10799
UC ; S/N 10001 through 10399	UC ; S/N 10001 through 11099
EK ; S/N 10001 through 10799	EK ; S/N 10001 through 11099

A Side

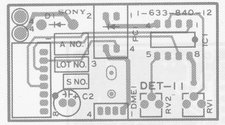

1-633-840-12 A SIDE

B Side

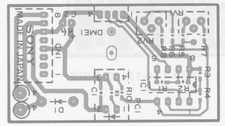

1-633-840-12 B SIDE

DET-11 BOARD (1-633-840-13)

DVR-2000	DVR-2100
J ; S/N 10201 and higher	J ; S/N 10801 and higher
UC ; S/N 10401 and higher	UC ; S/N 11101 and higher
EK ; S/N 10801 and higher	EK ; S/N 11101 and higher

A Side

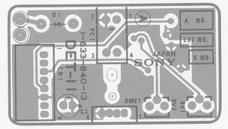

1-633-840-13 A SIDE

B Side

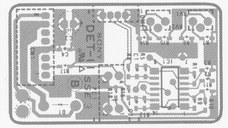

1-633-840-13 B SIDE

PS-219 BOARD (1-639-112-11)

A Side

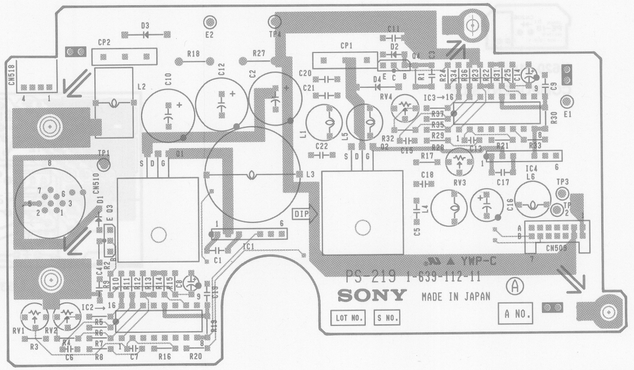

1-639-112-11 A SIDE

B Side

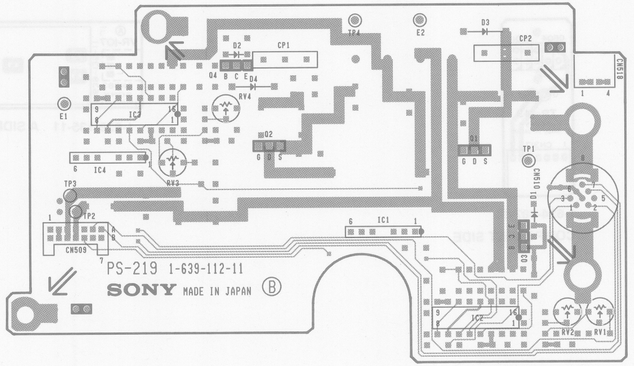

1-639-112-11 B SIDE

FUNCTION CONTROL PANEL DET-11, PS-219, LE-78

LE-78 BOARD (1-639-115-11)

A Side

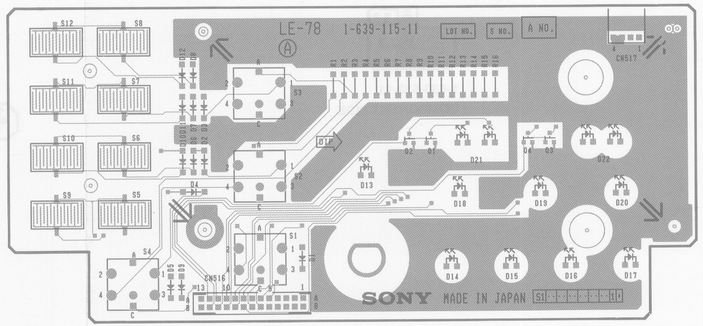

1-639-115-11 A SIDE

SW-423 BOARD (1-639-114-11)

A Side

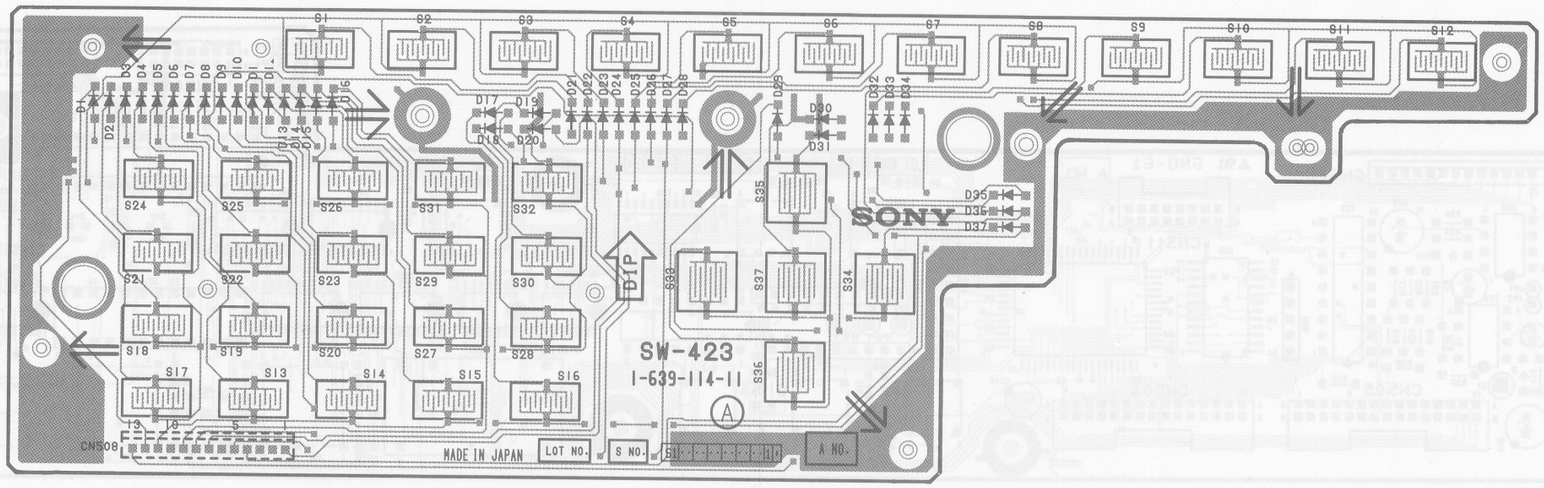

1-639-114-11 A SIDE

B Side

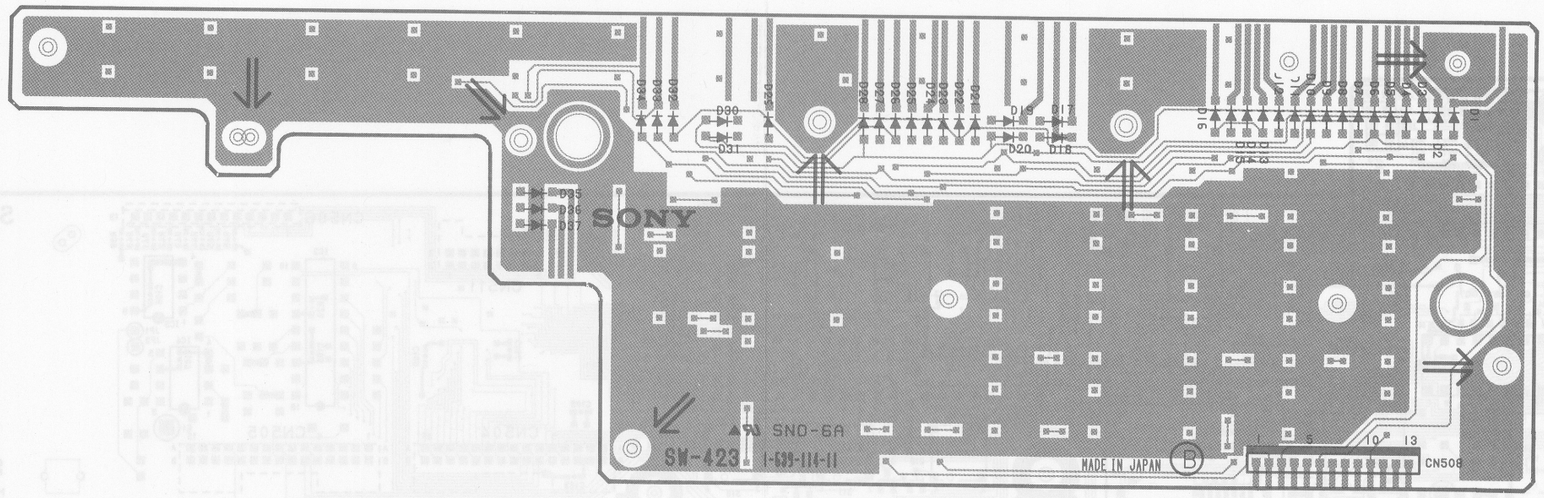

1-639-114-11 B SIDE

20-41

SW-448 BOARD (1-639-113-11)

A Side

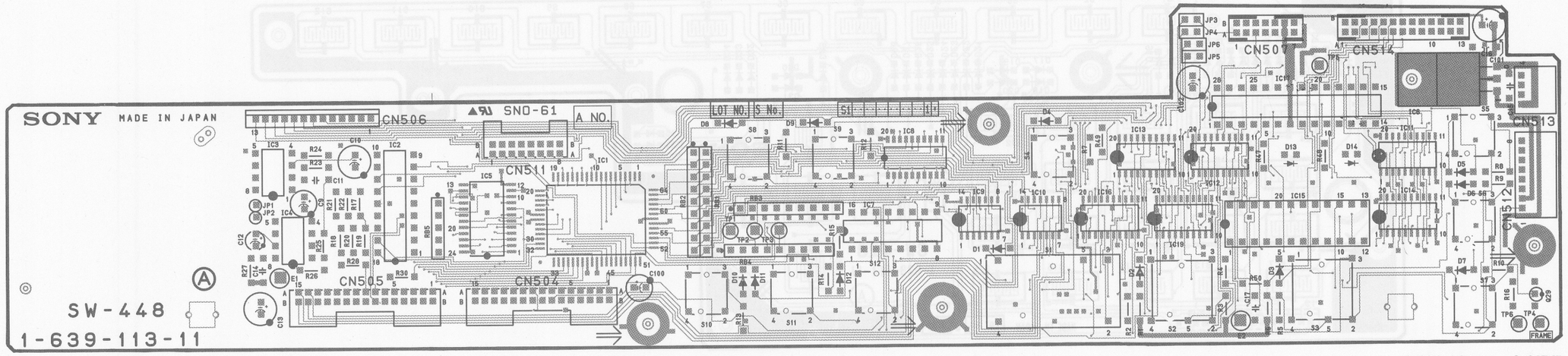

1-639-113-11 A SIDE

B Side

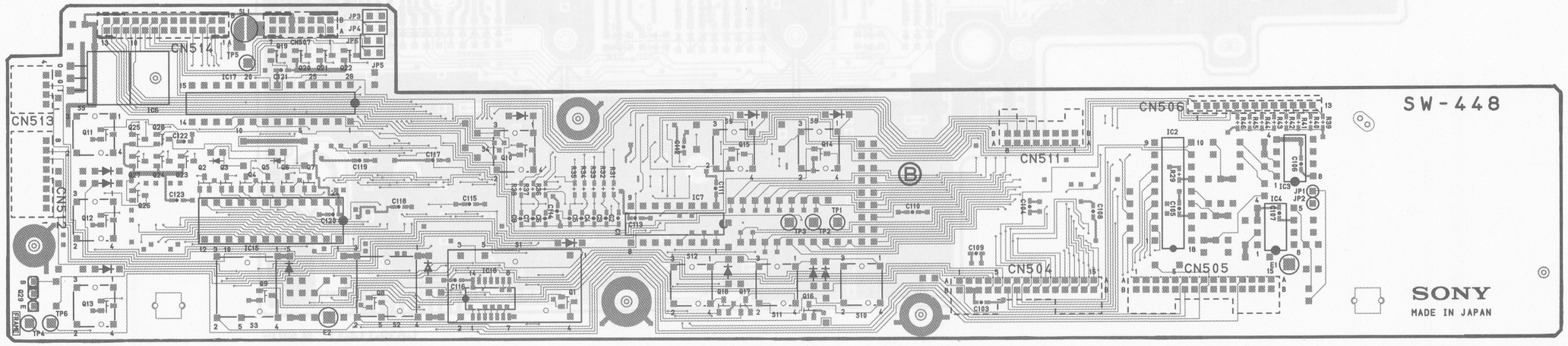

1-639-113-11 B SIDE

20-42

CP-156 BOARD (1-639-111-11)

A Side

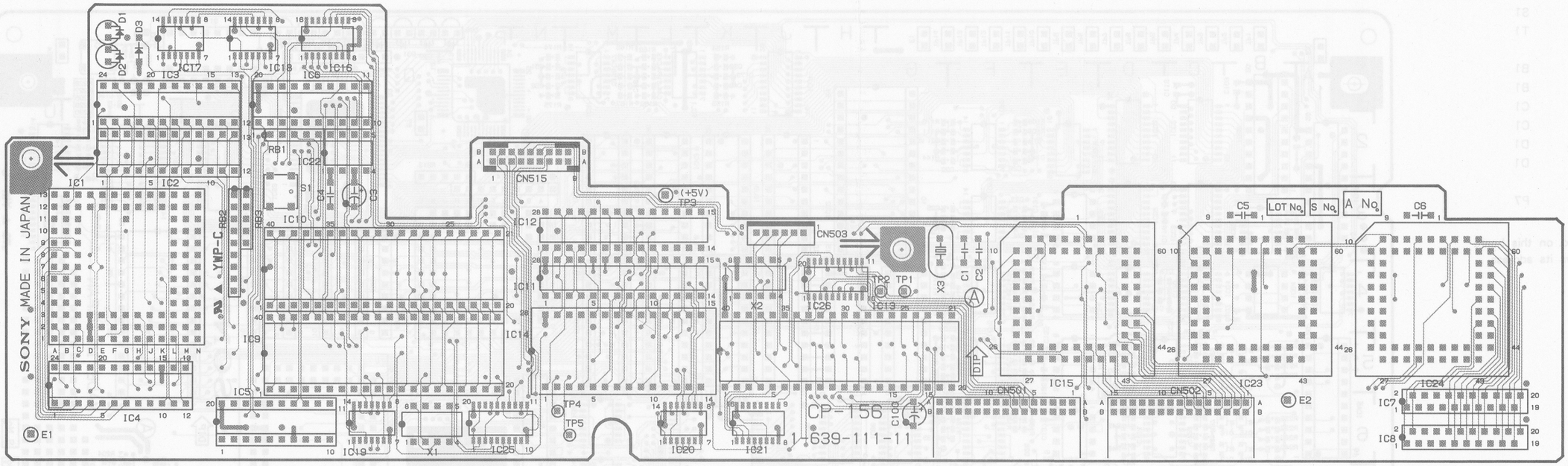

1-639-111-11 A SIDE

B Side

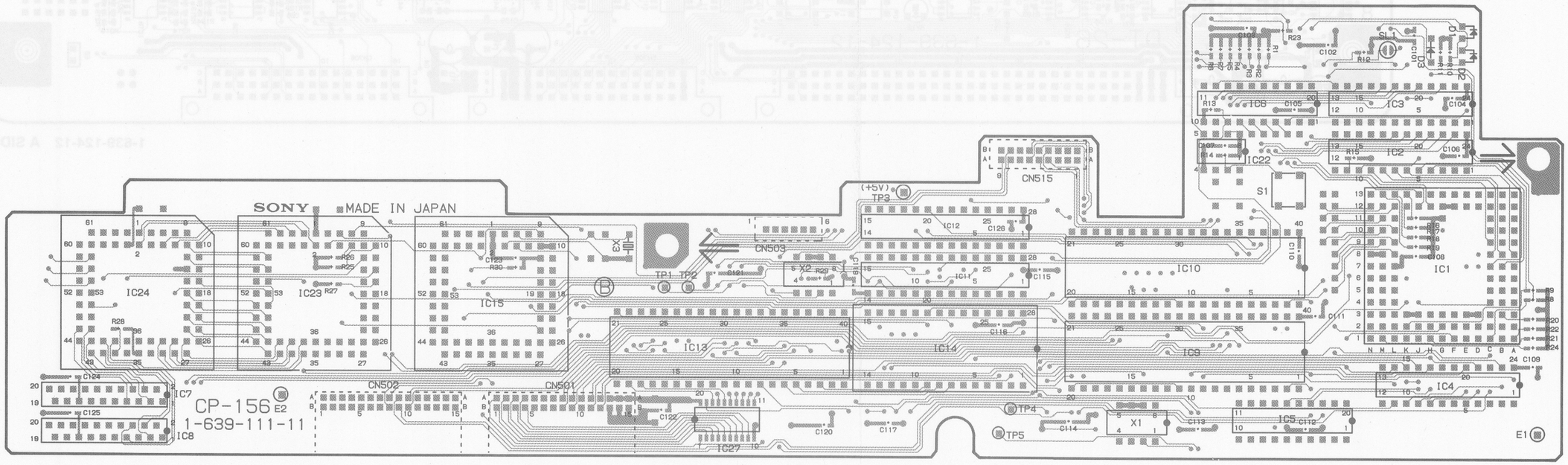

1-639-111-11 B SIDE

20-43

DT-26 BOARD (1-639-124-12)

DVR-2100 ONLY

DVR-2000	DVR-2100
J; S/N 10201 and higher	J; S/N 10601 and higher
UC; S/N 10201 and higher	UC; S/N 10601 and higher
EK; S/N 10301 and higher	EK; S/N 10601 and higher

DT-26 (1-639-124-12)

DVR-2100

CN704	F8	S11	S1
CN705	L8	S12	T1
CN706	R8		
		TP1	B1
D11	B5	TP2	B1
D13	B5	TP3	C1
D14	B5	TP4	C1
D15	B6	TP5	D1
D16	B6	TP6	D1
D17	B6		
D18	B6	X1	P7
D19	B7		
D20	B7		
D21	B7		
D22	B7		
D23	B8		
D24	B8		
D25	B8		
D26	B8		
D27	D7		
D28	F6		
D29	P1		
D30	Q1		
D31	Q1		
D32	R1		
D33	R1		
D34	R1		
D35	R1		
D36	S1		
D37	T1		
D38			
E1	G1		
E2	A1		
E3	A8		
E4	T1		
E5	T8		
IC1			
IC3			
IC4			
IC5			
IC6			
RB11	A6		
RB12	A8		
RB17	S1		
RB18	R7		
RB19			
RB20			
RB21			
RB22			
RV11	F7		
RV12	F8		
RV13	G7		
RV14	G8		

IC No. on this board shows its address.

A Side

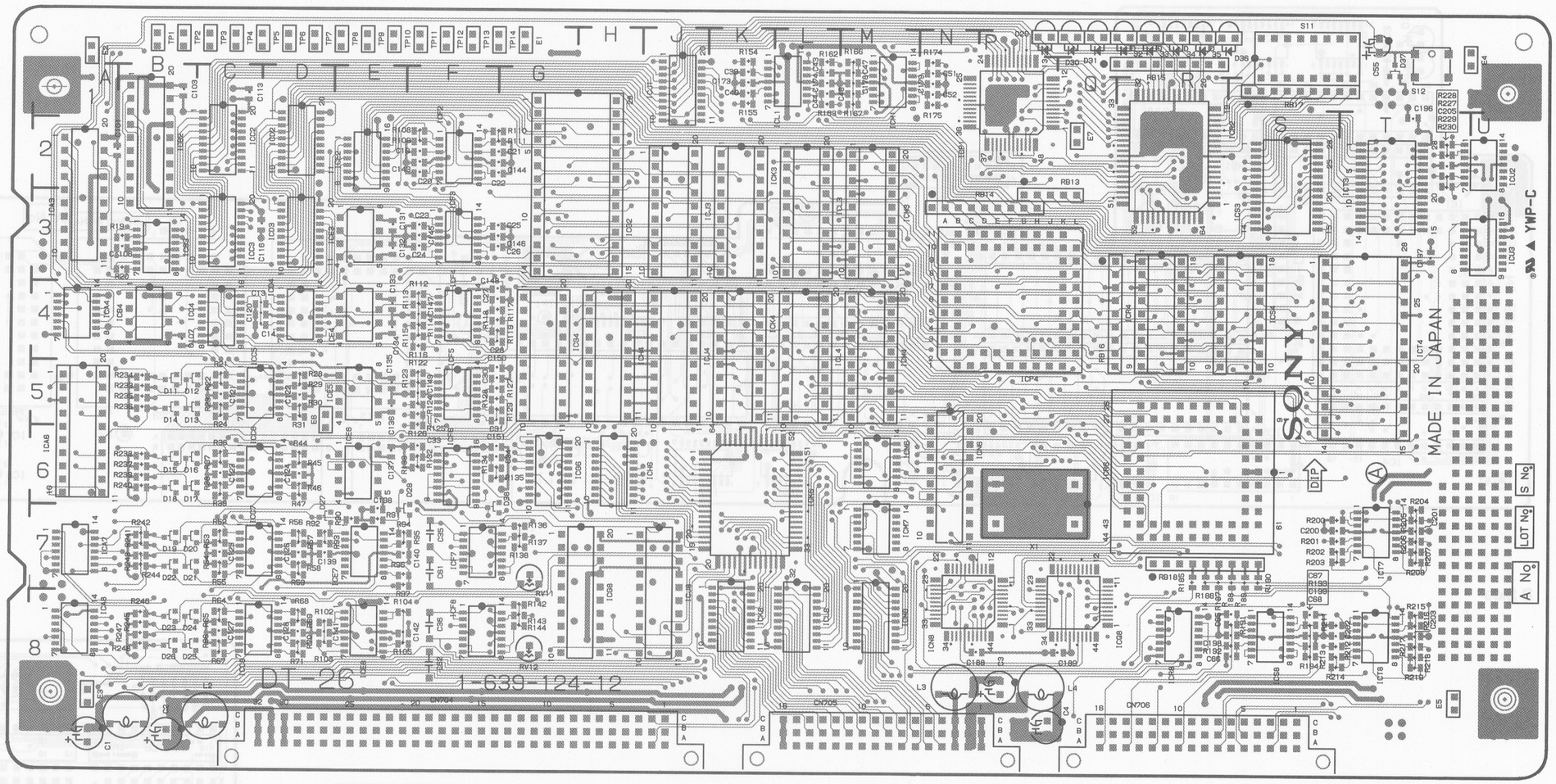

1-639-124-12 A SIDE

20-44 (b)

DT-26 BOARD (1-639-124-12)

DVR-2100 ONLY

DVR-2000	DVR-2100
J; S/N 10201 and higher	J; S/N 10601 and higher
UC; S/N 10201 and higher	UC; S/N 10601 and higher
EK; S/N 10301 and higher	EK; S/N 10601 and higher

B Side

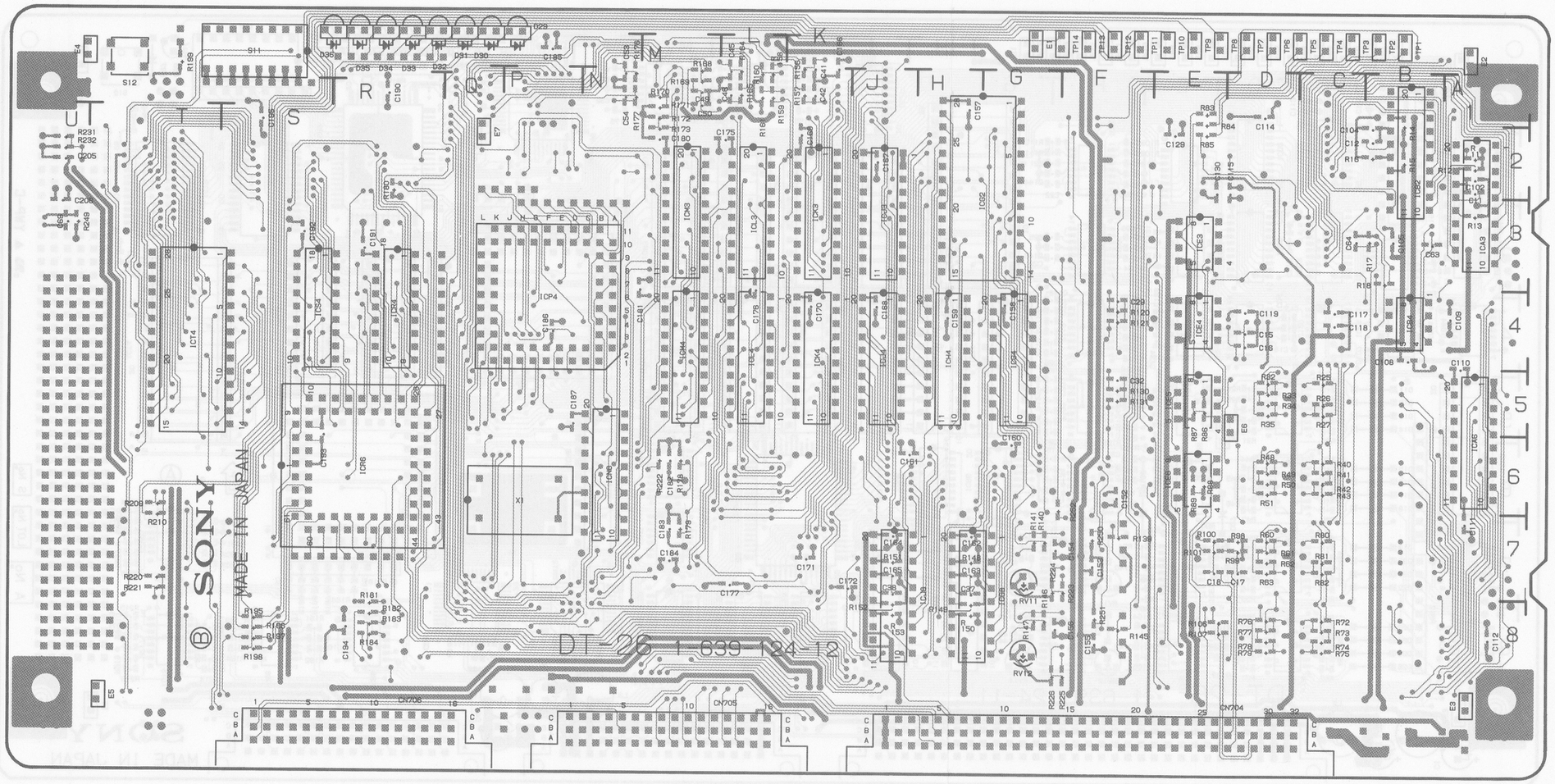

1-639-124-12 B SIDE

DT-26 (1-639-124-12)

DVR-2100

CN704	F8	S11	S1
CN705	L8	S12	T1
CN706	R8		
		TP1	B1
D11	B5	TP2	B1
D13	B5	TP3	C1
D14	B5	TP4	C1
D15	B6	TP5	D1
D16	B6	TP6	D1
D17	B6		
D18	B6	X1	P7
D19	B7		
D20	B7		
D21	B7		
D22	B7		
D23	B8		
D24	B8		
D25	B8		
D26	B8		
D27	D7		
D28	F6		
D29	P1		
D30	Q1		
D31	Q1		
D32	R1		
D33	R1		
D34	R1		
D35	R1		
D36	S1		
D37	T1		
D38			
E1	G1		
E2	A1		
E3	A8		
E4	T1		
E5	T8		
IC1			
IC3			
IC4			
IC5			
IC6			
RB11	A6		
RB12	A8		
RB17	S1		
RB18	R7		
RB19			
RB20			
RB21			
RB22			
RV11	F7		
RV12	F8		
RV13	G7		
RV14	G8		

IC No. on this board shows its address.

20-45 (b)

DT-26 BOARD (1-639-124-11)

DVR-2100 ONLY

DVR-2000	DVR-2100
J; S/N 10001 through 10199	J; S/N 10001 through 10599
UC; S/N 10001 through 10199	UC; S/N 10001 through 10599
EK; S/N 10001 through 10299	EK; S/N 10001 through 10599

DT-26 (1-639-124-11)

DVR-2100

CN704	F8	TP1	B1
CN705	L8	TP2	B1
CN706	R8	TP3	C1
		TP4	C1
D11	B5	TP5	D1
D13	B5	TP6	D1
D14	B5		
D15	B6	X1	P7
D16	B6		
D17	B6		
D18	B6		
D19	B7		
D20	B7		
D21	B7		
D22	B7		
D23	B8		
D24	B8		
D25	B8		
D26	B8		
D27	D7		
D28	F6		
D29	P1		
D30	Q1		
D31	Q1		
D32	R1		
D33	R1		
D34	R1		
D35	R1		
D36	S1		
D37	T1		
D38	S1		
E1	G1		
E2	A1		
E3	A8		
E4	T1		
E5	T8		
RB11	A6		
RB12	A8		
RB13	P2		
RB14	P3		
RB15	R1		
RB16	Q4		
RB17	S1		
RB18	R7		
RV11	F7		
RV12	F8		
RV13	G7		
RV14	G8		
S11	S1		
S12	T1		

A Side

IC No. on this board shows its address.

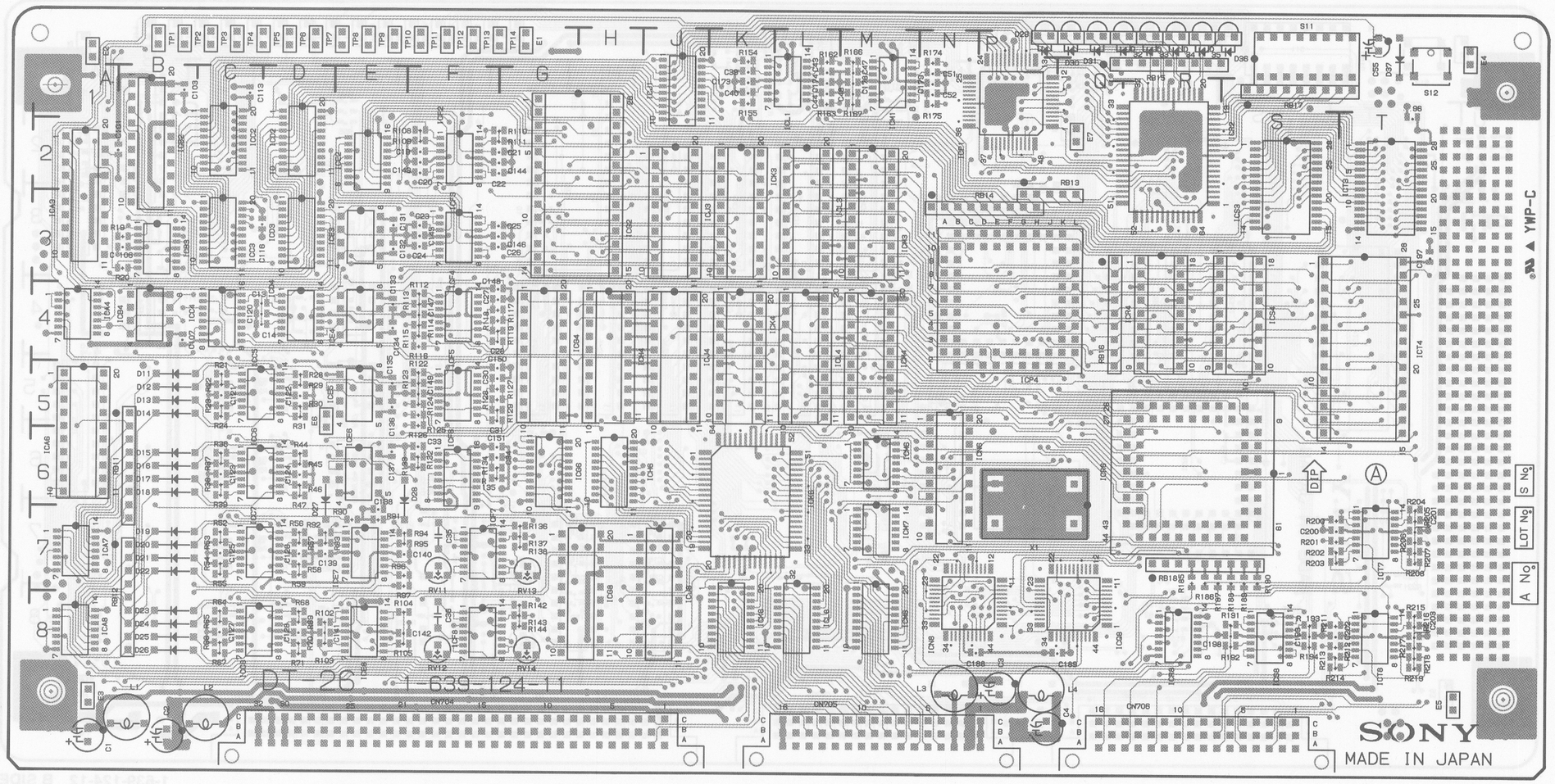

1-639-124-11 A SIDE

20-44 (a)

DT-26 BOARD (1-639-124-11)

DVR-2100 ONLY

DVR-2000	DVR-2100
J; S/N 10001 through 10199	J; S/N 10001 through 10599
UC; S/N 10001 through 10199	UC; S/N 10001 through 10599
EK; S/N 10001 through 10299	EK; S/N 10001 through 10599

B Side

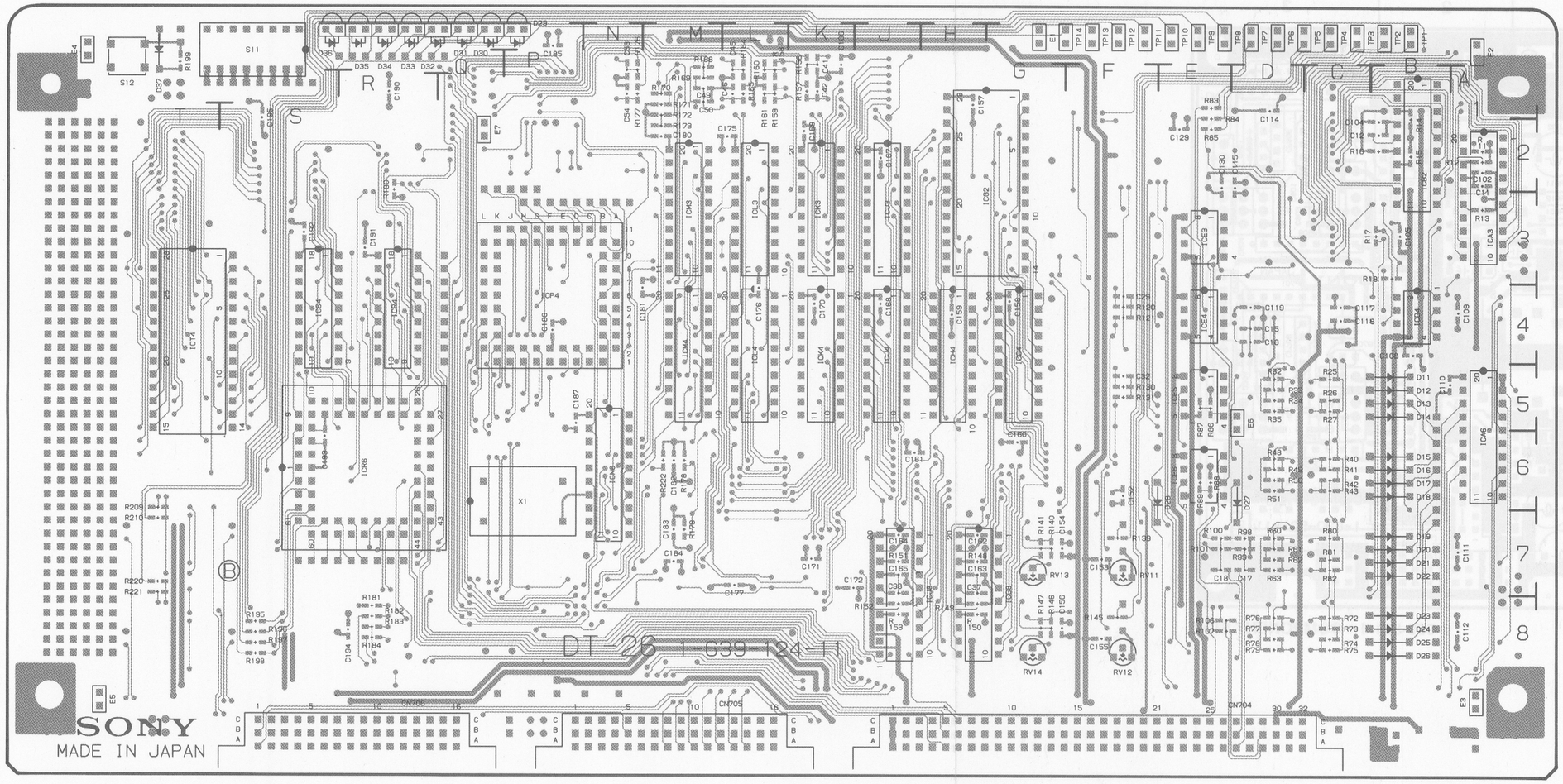

1-639-124-11 B SIDE

DT-26 (1-639-124-11)

DVR-2100

CN704	F8	TP1	B1
CN705	L8	TP2	B1
CN706	R8	TP3	C1
		TP4	C1
D11	B5	TP5	D1
D13	B5	TP6	D1
D14	B5		
D15	B6	X1	P7
D16	B6		
D17	B6		
D18	B6		
D19	B7		
D20	B7		
D21	B7		
D22	B7		
D23	B8		
D24	B8		
D25	B8		
D26	B8		
D27	D7		
D28	F6		
D29	P1		
D30	Q1		
D31	Q1		
D32	R1		
D33	R1		
D34	R1		
D35	R1		
D36	S1		
D37	T1		
D38	S1		
E1	G1		
E2	A1		
E3	A8		
E4	T1		
E5	T8		
RB11	A6		
RB12	A8		
RB13	P2		
RB14	P3		
RB15	R1		
RB16	Q4		
RB17	S1		
RB18	R7		
RV11	F7		
RV12	F8		
RV13	G7		
RV14	G8		
S11	S1		
S12	T1		

IC No. on this board shows its address.

20-45 (a)

DD-11 BOARD (1-630-521-11)

DVR-2100 ONLY

DD-11 (1-630-521-11)

DVR-2100

CN338	D2
D601	B1
D602	B1
D603	B1
D604	B2
D605	B2
E601	A3
IC601	D1
Q601	B2
Q602	A2
Q701	C3
Q702	C3
Q703	C3
Q704	C3
Q705	C3
Q706	C2
Q707	C3
Q708	C3
Q709	D3
Q710	C3
Q711	D2
Q801	A3
Q802	B3
Q803	B3
Q804	B3
Q805	B3
Q806	B2
Q807	A3
Q808	A3
Q809	B3
Q810	B3
Q811	C2
RV601	A3
TP601	A1
T601	C2

COMPONENT Side

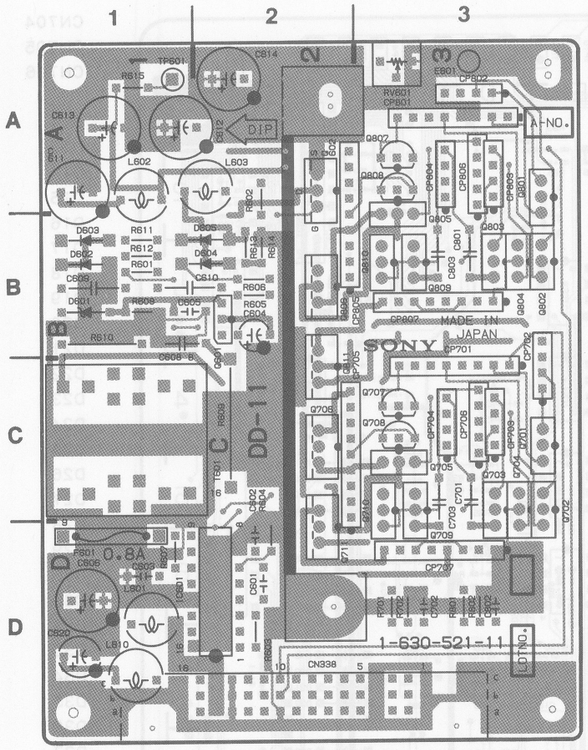

1-630-521-1 COMPONENT SIDE

20-46

SECTION 21
SEMICONDUCTOR PIN ASSIGNMENT

この章の図の中には互換性のないダイオード，トランジスタ，ICが併記されていることがあります。部品を交換するときには必ず部品表を参照してください。
等価回路はICメーカーのData Bookに従いました。

The chart in this section may sometimes show diodes, transistors, and ICs that are not interchangeable. When replacing a component, be sure to refer to the parts list. The circuit diagram of each IC is obtained from the IC data book published by the manufacturer.

TYPE	PAGE
02DZ ? ?	21-4
10E-2	21-4
1S2836	21-4
1SS106	21-4
1SS119	21-4
1SS120	21-4
1SS198	21-4
1SS226	21-4
1SS269	21-4
1SS97	21-4
1SZ ? ?	21-4
2SA1020	21-5
2SA1115	21-5
2SA1162	21-5
2SA1220A	21-5
2SA1226	21-5
2SA1283	21-5
2SA1413	21-5
2SA1461	21-5
2SA771	21-5
2SA844	21-5
2SA937	21-5
2SB1068	21-5
2SB1142	21-5
2SB1151	21-5
2SB733	21-5
2SB734	21-5
2SB740	21-5
2SB757	21-5
2SC1623	21-5
2SC1775A	21-5
2SC2120	21-5
2SC2240	21-5
2SC2655	21-5
2SC2690A	21-5
2SC2713	21-5
2SC2785	21-5
2SC2901	21-5
2SC3012	21-5
2SC3356	21-5
2SC3360	21-5
2SC3559	21-5
2SC3632	21-5
2SC3732	21-5
2SC3734	21-5
2SC3735	21-5
2SD1118	21-5
2SD1616A	21-5
2SD1691	21-5
2SD717	21-5
2SD774	21-5
2SD998	21-5
2SJ120S	21-5
2SJ122	21-6
2SK152	21-6
2SK385	21-6
2SK416S	21-6
2SK428	21-6
2SK523	21-6
2SK528	21-6
2SK554	21-6
74AC02SJ	21-7
74AC04PC	21-7
74AC04SJ	21-7
74AC08SJ	21-7
74AC244PC	21-7
74AC541SJ	21-7
74AC74PC	21-7
74AC86SJ	21-8
74ACT245SJ	21-8
74ACT573SJ	21-8
74ACT74PC	21-7
74F04PC	21-8
74F175PC	21-8
74F374PC	21-9
AD42020-1	21-9
AK5327-VP	21-9
AM26LS30PC	21-10
AM26LS31PC	21-10
AM26LS32PC	21-10
AM27C512-150DC	21-94
AM27C512-155DC	21-94
AT27HC642-35DC	21-97
AT28C64-15PC	21-94
BG5531K	21-4
BP026	21-11
BQ4011YMA-100	21-93 (b)
BX1040	21-11
BX1229	21-11
BX1281	21-11
BX1320	21-11
BX1321	21-11
BX365A	21-11
CF77074NT	21-12
CX20160	21-12
CX23028	21-12
CX23038	21-13
CX23043	21-13
CX23065A	21-13
CX7907A	21-14
CX7912A	21-16
CXA1570M	21-18
CXA1626Q	21-18
CXA1627Q	21-18
CXA1628Q	21-19
CXA1629Q	21-19
CXB1008G	21-20
CXD1095Q	21-20
CXD1317Q	21-21
CXD2210Q	21-22
CXD8046G	21-23
CXD8068G	21-24
CXD8069BG	21-25
CXD8069G	21-25
CXD8093Q	21-26
CXD8094Q	21-26
CXD8099G	21-27
CXD8123G	21-28
CXD8124G	21-29
CXD8125Q	21-30
CXD8167Q	21-30
CXD8173G	21-31
CXD8174G	21-32
CXD8179G	21-33
CXD8201Q	21-34
CXD8215Q	21-35
CXD8216AG	21-36
CXD8216G	21-36
CXD8224ASP	21-37
CXD8224S	21-37
CXD8225AG	21-37
CXD8226P	21-38
CXD8246Q	21-38
CXD8247Q	21-39
CXD8248Q	21-39
CXD8249Q	21-40
CXD8250G	21-41
CXD8251G	21-42
CXD8252Q	21-43
CXD8253BG	21-44
CXD8253G	21-44
CXD8273Q	21-45
CXD8280Q	21-46
CXD8281Q	21-47
CXD8305G	21-48
CXK51256P-55	21-49
CXK5464AP-25	21-49
CXK5464AP-35	21-49
CXK581001M-70L	21-50
CXK58257ASP-10L	21-50
CXK58257ASP-70LL	21-50
CXK58257M-70LL	21-50
CXK58257SP-10L	21-50
CXK58257SP-70LL	21-50
CXK58258SP-45	21-51
CXK5863P-35	21-51
CXQ71054P	21-52
CY7C199-45PC	21-93 (b)
CY7C225-30PC	21-95
CY7C235-30PC	21-96
CY7C245A-35PC	21-95
CY7C291L-35PC	21-96
CY7C421-30PC	21-52
D8LC40	21-4
D8LCA20R	21-4
DA204U	21-4
DM211A	21-6
DM230	21-6
DS1230Y	21-53
DTA114ES	21-6
DTA144ES	21-6
DTC114EK	21-6
DTC114YS	21-6
DTC124EK	21-6
DTC124ES	21-6
DTC143TK	21-6
DTC143TS	21-6
DTC144EF	21-6
DTC144WK	21-6

TYPE	PAGE
DTC144WS	21-6
EAA5504S	21-4
EAY5504S	21-4
EBR3403S	21-4
EBR5504S	21-4
EPM5032DC-2	21-99
EPM5032PC-2	21-99
ERA81-004	21-4
ERA82-004	21-4
ERA84	21-4
ERB81-004	21-4
ERB84-009	21-4
ERC84-009	21-4
ESAB85-009	21-4
ESAC85-009	21-4
ESAC92-02	21-4
ESAD83	21-4
FT6022	21-53
FT6022D	21-53
HD14046BP	21-53
HD14053BFP	21-53
HD63140CP	21-54
HD63484CP8	21-55
HD63487CP	21-56
HM514402BZ-8	21-93 (b)
HM514402ZP-10	21-57
HN27C1024HG-85	21-98
HN27C4096G-10	21-96
HSM88AS	21-4
ICL7665SCPA	21-57
IDT74FCT821ATP	21-57
IDT74FCT821ATSO	21-57
LM317T	21-58
LM324NS	21-93 (a)
LM337T	21-58
LM339N	21-93 (a)
LM358PS	21-93 (a)
LM386N	21-58
LM7812CT	21-58
LM78L05ACZ	21-58
LM7912CT	21-58
LN35BP	21-4
LN45YP	21-4
LT1081CN	21-58
LT-9200N	21-4
M5220L	21-59
M5220P	21-59
M5238FP	21-59
M5238P	21-59
M5241L	21-59
M5F78M05L	21-59
MB3759	21-59
MB3759PF	21-59
MB3769AP	21-59
MB4002	21-59
MB4002PF	21-59
MB81C79A-45P	21-60
MB8421-90LPFQ	21-60
MB84256A-70LLPF	21-63
MB8431-90LPFQ	21-61
MB86022PF	21-62
MB89251APF	21-62
MB89254H-SOP	21-63
MB89363PF	21-64
MB89371APF	21-65
MBM2212-20P	21-66
MC10H116M	21-66
MC10H124L	21-66
MC10H124M	21-66
MC10H125L	21-66
MC10H125M	21-66
MC14001BCP	21-66
MC14001BF	21-66
MC14011BF	21-66
MC14049UBF	21-66
MC14051BCP	21-67
MC14052BCP	21-67
MC14052BF	21-67
MC14520BCP	21-67
MC14538BCP	21-67
MC14538BF	21-67
MC34050P	21-67
MC34051P	21-93 (b)
MC3486M	21-67
MC68020RC16	21-68
MC68681P	21-69
MC74HC109N	21-73
MC74HC175F	21-93 (c)
MC74HC4051F	21-69
MC74HC4052F	21-69
MC74HC4053F	21-69
MC74HC4538AN	21-83
MC74HC74N	21-7
MC932	21-4
MP6901	21-70
MS62256CLL-70NC	21-50
NE527N	21-70
NJM082M	21-93 (a)
NJM78L05A	21-58
NJM78L06A	21-58
NJM78L09A	21-58
NJN79L09A	21-70
PAL20RA10CNS	21-99
PALCE16V8H-15PC/4	21-99
PALCE16V8H-15PC	21-99
PALCE16V8H-25PC	21-99
PALCE16V8Q-25PC/4	21-99
PALCE16V8Q-25PC	21-99
PALCE20V8H-15PC/4	21-99
PALCE20V8H-15PC	21-99
PALCE22V10H-15PC/4	21-99
PALCE22V10H-15PC	21-99
PALCE22V10H-25PC/4	21-99
PALCE22V10H-25PC	21-99
PC627	21-70
PC817	21-4
PCM56P-K	21-70
PCM58P-J	21-70
PCM63P-K	21-88
PG5531KX	21-4
PH110	21-6
PY5504S	21-4
PY5525S	21-4
PY5531K	21-4
RC2043MD	21-59
RC4558PS	21-58
RC5532DD	21-59
RC78L05A	21-58
RC78L06A	21-58
RC78L09A	21-58
RC79L05A	21-70
RC79L06A	21-70
RC79L09A	21-70
RD ? ? EB ?	21-4
RD ? ? ESB ?	21-4
RD ? ? M	21-4
RP5C15	21-71
RU3AM	21-4
S10SC4MR	21-4
S15VB60	21-4
S3K40	21-4
S5KC20	21-4
S5KC20R	21-4
SBX1601A	21-71
SBX1602A	21-71
SE310	21-4
SEL1510C	21-4
SLP162B	21-4
SM5813APT	21-72
SM5843AP1	21-93 (c)
SN74ALS04BN	21-8
SN74ALS112ANS	21-72
SN74ALS874BNT	21-72
SN74ALS874NT	21-72
SN74HC00AN	21-72
SN74HC00ANS	21-72
SN74HC02AN	21-7
SN74HC02ANS	21-7
SN74HC03NS	21-73
SN74HC04AN	21-7
SN74HC04ANS	21-7
SN74HC05AN	21-73
SN74HC05ANS	21-73
SN74HC08AN	21-7
SN74HC08ANS	21-7
SN74HC107N	21-73
SN74HC109N	21-73
SN74HC10AN	21-73
SN74HC11AN	21-73
SN74HC11N	21-73
SN74HC125AN	21-73
SN74HC125N	21-73
SN74HC125NS	21-73
SN74HC126AN	21-73
SN74HC126N	21-73
SN74HC133N	21-73
SN74HC133NS	21-73
SN74HC138AN	21-74
SN74HC138ANS	21-74
SN74HC139AN	21-74
SN74HC139ANS	21-74
SN74HC148ANS	21-74
SN74HC148N	21-74
SN74HC148NS	21-74
SN74HC14AN	21-74
SN74HC14ANS	21-74
SN74HC151AN	21-74
SN74HC153AN	21-75
SN74HC157AN	21-75
SN74HC157ANS	21-75
SN74HC161AN	21-75
SN74HC163AN	21-75
SN74HC163ANS	21-75
SN74HC164AN	21-76
SN74HC164N	21-76
SN74HC166AN	21-76
SN74HC166N	21-76
SN74HC174AN	21-76
SN74HC175AN	21-76
SN74HC175ANS	21-76
SN74HC20AN	21-76
SN74HC20ANS	21-76
SN74HC21AN	21-77

TYPE	PAGE
SN74HC21N	21-77
SN74HC240AN	21-77
SN74HC240ANS	21-77
SN74HC244AN	21-7
SN74HC244ANS	21-7
SN74HC245AN	21-8
SN74HC245ANS	21-8
SN74HC253AN	21-77
SN74HC253N	21-77
SN74HC257AN	21-77
SN74HC257ANS	21-77
SN74HC257N	21-77
SN74HC257NS	21-77
SN74HC273ANS	21-77
SN74HC27AN	21-77
SN74HC27N	21-77
SN74HC280NS	21-78
SN74HC30AN	21-78
SN74HC30N	21-78
SN74HC32AN	21-78
SN74HC32ANS	21-78
SN74HC352NS	21-78
SN74HC368ANS	21-75
SN74HC374AN	21-78
SN74HC377AN	21-78
SN74HC377ANS	21-78
SN74HC393AN	21-79
SN74HC393ANS	21-79
SN74HC4024N	21-79
SN74HC4040AN	21-79
SN74HC4040N	21-79
SN74HC4075AN	21-79
SN74HC4075ANS	21-79
SN74HC4075N	21-79
SN74HC4075NS	21-79
SN74HC540AN	21-79
SN74HC541AN	21-7
SN74HC541ANS	21-7
SN74HC573BNS	21-8
SN74HC573NS	21-8
SN74HC574AN	21-80
SN74HC574ANS	21-80
SN74HC74AN	21-7
SN74HC74ANS	21-7
SN74HC86AN	21-8
SN74HCT245ANS	21-8
SN74HCT374AN	21-78
SN74HCT541NS	21-7
SN74HCU04ANS	21-7
SN74LS04N	21-8
SN74LS08N	21-80
SN74LS240N	21-80
SN74LS244N	21-80
SN74LS374N	21-9
SN74LS399N	21-80
SN74S1057SC	21-80
SN751177N	21-81
SN75188N	21-81
SN75189AN	21-81
SN75ALS194N	21-81
TA7257P	21-81
TC40107BP	21-81
TC4049BF	21-66
TC4093BP	21-81
TC40H004F	21-82
TC40H074F	21-82
TC40H368F	21-82
TC4520BPHB	21-67
TC5020BP	21-82
TC524258AZ-10	21-82
TC55416P-25	21-93 (c)
TC74AC574F	21-80
TC74ACT04F	21-7
TC74ACT541F	21-7
TC74HC123AP	21-83
TC74HC221AF	21-83
TC74HC283AP	21-83
TC74HC352AF	21-93 (c)
TC74HC40105AP	21-83
TC74HC4053AF	21-69
TC74HC4538AP	21-83
TC74HC595AP	21-84
TL084CNS	21-84
TL431CLP	21-84
TL7700CP	21-84
TL7705ACP	21-84
TLC372CPS	21-84
TLR214	21-4
TLR224	21-4
TMS27C512-15JL	21-94
TMS27C512-20JL	21-94
TMS4C1050-30SD	21-85
TMS4C1060-40SD	21-85
UPC1663G	21-85
UPC319C	21-85
UPC319G2	21-85
UPC324G2	21-85
UPC339C	21-85
UPC339G2	21-85
UPC358C	21-85
UPC358G2	21-85
UPC393C	21-86
UPC393G2	21-86
UPC4082G2	21-59
UPC4084C	21-84
UPC4558C	21-59
UPC4558G2	21-59
UPC648C	21-86
UPD4053BC	21-53
UPD42101C-3	21-86
UPD42505C-50	21-86
UPD431000AGW-70L	21-93
UPD5201G	21-87
UPD6451CX-501	21-87
UPD70136R-12	21-88
UPD70136R-16	21-88
UPD70208R-10	21-89
UPD70320L-8	21-90
UPD71054GB-3B4	21-91
UPD71055GB-10-3B4	21-91
UPD71059C	21-92
UPD71059GB-3B4	21-92
UPD71621C	21-93
V09G	21-4
V11 ?	21-4
X2212P	21-66
YM2413	21-93

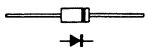

10E-2
1SS119
1SS120
ERA84
RU3AM
S3K40

TOP VIEW

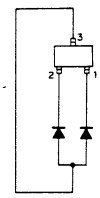

1S2836
1SS269

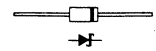

1SS106
1SS198
1SS97
ERA81-004
ERA82-004
ERB81-004
ERB84-009
ERC84-009

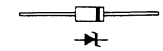

1SZ ? ?
RD ? ?EB ?
RD ? ?ESB ?

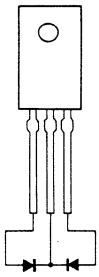

D8LC40

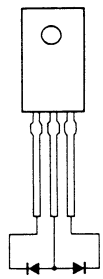

D8LCA20R

TOP VIEW

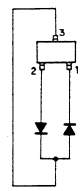

1SS226
DA204U
HSM88AS

EAA5504S ; AMBER
EAY5504S ; YELLOW
EBR5504S ; RED

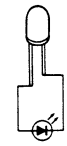

EBR3403S ; RED

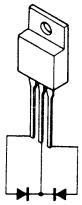

ESAB85-009
ESAC85-009
ESAC92-02
S5KC20

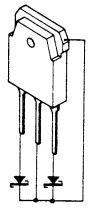

ESAD83

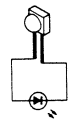

LN35BP ; GREEN
LN45YP ; AMBER
TLR214 ; RED
TLR224 ; RED

-SIDE VIEW-

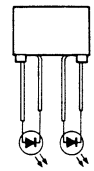

LT-9200N : YELLOWISH GREEN

MC932

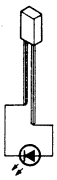

BG5531K ; GREEN
PG5531KX ; GREEN
PY5531K ; YELLOW

PY5504S ; YELLOW
PY5525S ; YELLOW

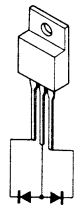

S10SC4MR
S5KC20R

BOTTOM VIEW

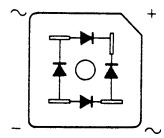

S15VB60

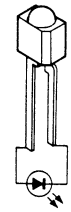

SE310 ; INFRARED

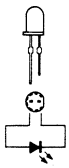

SEL1510C ; GREEN

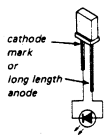

SLP162B ; RED

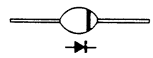

V09G
V11 ?

(TOP VIEW)

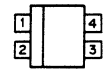

PC817

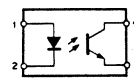

TOP VIEW

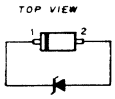

02DZ ? ?

TOP VIEW

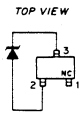

RD ? ?M

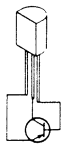

2SA1020
2SA1283
2SB740

2SA1115

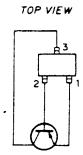

2SA1162
2SA1226
2SA1461

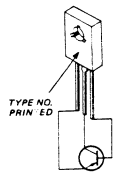

2SA1220A
2SB1151

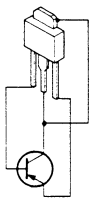

2SA1413

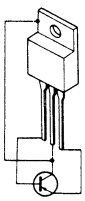

2SA771

2SA844
2SB1068

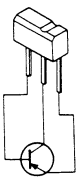

2SA937

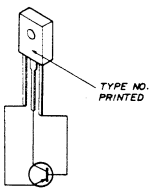

2SB1142

2SB733
2SB734

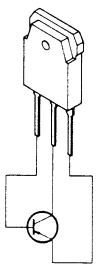

2SB757

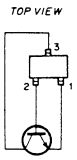

2SC1623
2SC2713
2SC3356
2SC3360
2SC3734
2SC3735

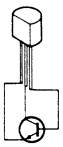

2SC1775A
2SC2120
2SC2240
2SD1616A

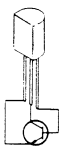

2SC2655

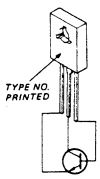

2SC2690A
2SD1691

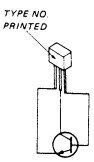

2SC2785
2SC3732

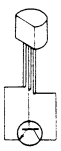

2SC2901

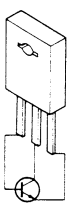

2SC3012

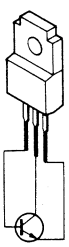

2SC3559

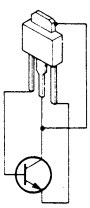

2SC3632

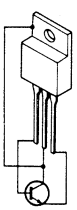

2SD1118

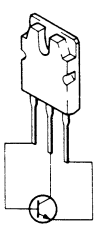

2SD717

2SD774

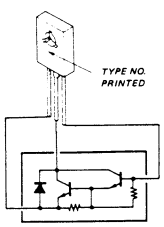

2SD998

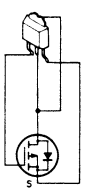

2SJ120S

2SJ122

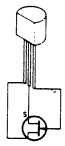

2SK152
2SK523

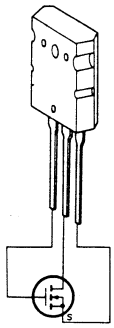

2SK385

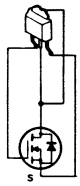

2SK416S

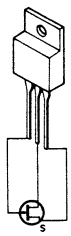

2SK428

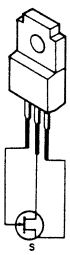

2SK528

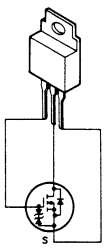

2SK554

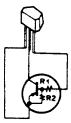

DTA114ES (R1 = 10K, R2 = 10K)
DTA144ES (R1 = 47K, R2 = 47K)

TOP VIEW

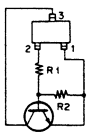

DTC114EK (R1 = 10K, R2 = 10K)
DTC124EK (R1 = 22K, R2 = 22K)
DTC143TK (R1 = 4.7K, R2 = ∞)
DTC144WK (R1 = 47K, R2 = 22K)

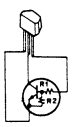

DTC114YS (R1 = 10K, R2 = 47K)
DTC124ES (R1 = 22K, R2 = 22K)
DTC143TS (R1 = 4.7K, R2 = OPEN)
DTC144WS (R1 = 47K, R2 = 22K)

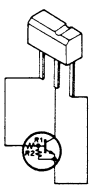

DTC144EF (R1 = 47K, R2 = 47K)

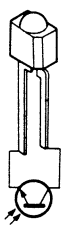

PH110

TOP VIEW

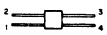

DM-230

– Equivalent Circuit –

DM211A

Magneto-Sensing Element
– Equivalent Circuit –

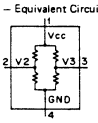

74AC02SJ (NS) FLAT PACKAGE
SN74HC02AN (TI)
SN74HC02ANS (TI) FLAT PACKAGE

C-MOS QUAD 2-INPUT NOR GATE
– TOP VIEW –

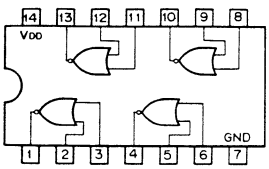

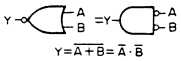

$Y = \overline{A+B} = \overline{A} \cdot \overline{B}$

A	B	Y
0	0	1
0	1	0
1	0	0
1	1	0

0 ; LOW LEVEL
1 ; HIGH LEVEL

NOTE :

TYPE	VDD
TC74AC02F	+2 to +5.5V
OTHER TYPES	+2 to +6V

74AC04PC (NS)
74AC04SJ (NS) FLAT PACKAGE
SN74HC04AN (TI)
SN74HC04ANS (TI) FLAT PACKAGE
SN74HCU04ANS (TI) FLAT PACKAGE
TC74ACT04F (TOSHIBA) FLAT PACKAGE

C-MOS HEX INVERTER
– TOP VIEW –

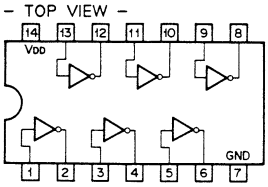

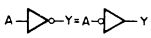

$Y = \overline{A}$

A	Y
0	1
1	0

0 ; LOW LEVEL
1 ; HIGH LEVEL

NOTE :

TYPE	VDD
74ACT04 TYPES 74HCT04 TYPES	+5V
TC74AC04F	+2 to +5.5V
TC74ACT04F	+4.5 to +5.5V
OTHER TYPES	+2 to +6V

74AC08SJ (NS) FLAT PACKAGE
SN74HC08AN (TI)
SN74HC08ANS (TI) FLAT PACKAGE

C-MOS QUAD 2-INPUT AND GATE
– TOP VIEW –

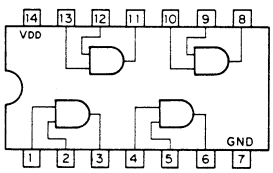

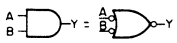

$Y = A \cdot B = \overline{\overline{A} + \overline{B}}$

A	B	Y
0	0	0
0	1	0
1	0	0
1	1	1

0 ; LOW LEVEL
1 ; HIGH LEVEL

NOTE :

TYPE	VDD
TC74AC08F	+2 to +5.5V
OTHER TYPES	+2 to +6V

74AC244PC (NS)
SN74HC244AN (TI)
SN74HC244ANS (TI) FLAT PACKAGE

C-MOS BUS BUFFER WITH 3-STATE OUTPUTS
– TOP VIEW –

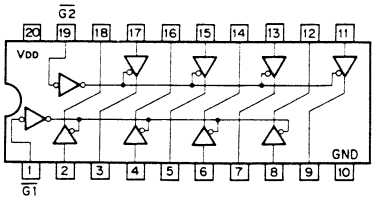

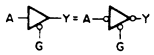

G	A	Y
0	0	0
0	1	1
1	X	HI-Z

0 ; LOW LEVEL
1 ; HIGH LEVEL
X ; DON'T CARE
HI-Z ; HIGH IMPEDANCE

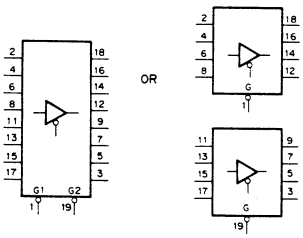

NOTE :

TYPE	VDD
AC HC 40H	+2 to +6V
ACT HCT	+5V

74AC541SJ (NS) FLAT PACKAGE
SN74HC541AN (TI)
SN74HC541ANS (TI) FLAT PACKAGE
SN74HCT541NS (TI) FLAT PACKAGE
TC74ACT541F (TOSHIBA) FLAT PACKAGE

C-MOS BUFFERS AND LINE DRIVERS WITH 3-STATE OUTPUTS
– TOP VIEW –

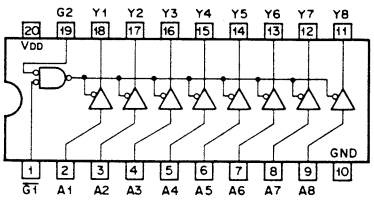

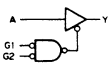

G1	G2	A	Y
0	0	0	0
0	0	1	1
1	X	X	HI-Z
X	1	X	HI-Z

0 ; LOW LEVEL
1 ; HIGH LEVEL
X ; DON'T CARE
HI-Z ; HIGH IMPEDANCE

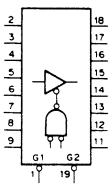

NOTE :

TYPE	VDD
AC	+2 to +5.5V
HC	+2 to +6V
ACT/HCT	+5V

74AC74PC (NS)
74ACT74PC (NS)
MC74HC74N (MOTOROLA)
SN74HC74AN (TI)
SN74HC74ANS (TI) FLAT PACKAGE

C-MOS D-TYPE FLIP FLOP WITH DIRECT SET/RESET
– TOP VIEW –

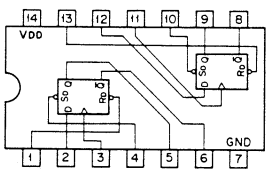

INPUTS				OUTPUTS	
$\overline{SD}$	$\overline{RD}$	CK	D	Qn+1	$\overline{Qn+1}$
0	1	X	X	1	0
1	0	X	X	0	1
0	0	X	X	1	1
1	1	↑	1	1	0
1	1	↑	0	0	1
1	1	0	X	Qn	$\overline{Qn}$

0 ; LOW LEVEL
1 ; HIGH LEVEL
X ; DON'T CARE

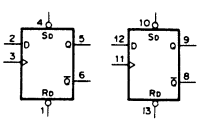

NOTE :

TYPE	VDD
74ACT	+5V
TC74AC74F	+2 to +5.5V
TC74ACT74F	+4.5 to +5.5V
OTHER TYPES	+2 to +6V

74AC86SJ (NS) FLAT PACKAGE
SN74HC86AN (TI)

C-MOS EXCLUSIVE OR GATE
– TOP VIEW –

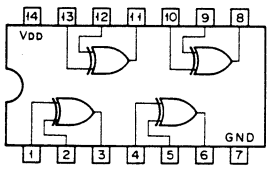

A	B	Y
0	0	0
0	1	1
1	0	1
1	1	0

0 ; LOW LEVEL
1 ; HIGH LEVEL

TYPE	VDD
TC74AC86F	+2 to +5.5V
OTHER TYPES	+2 to +6V

74ACT245SJ (NS) FLAT PACKAGE
SN74HC245AN (TI)
SN74HC245ANS (TI) FLAT PACKAGE
SN74HCT245ANS (TI) FLAT PACKAGE

C-MOS BILATERAL BUS TRANSCEIVERS WITH 3-STATE OUTPUTS
– TOP VIEW –

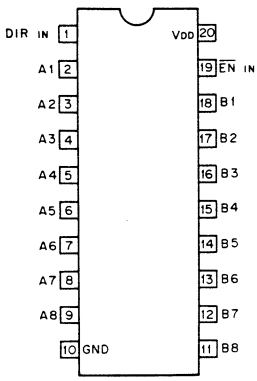

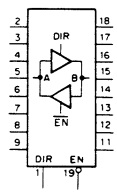

EN	DIR	OPERATION
0	0	B to A
0	1	A to B
1	X	HI – Z

0 ; LOW LEVEL
1 ; HIGH LEVEL
X ; DON'T CARE
HI-Z ; HIGH IMPEDANCE

NOTE :

TYPE	VDD
AC HC	+2 to +6V
ACT HCT	+5V
TC74AC245F TC74AC245P	+2 to +5.5V

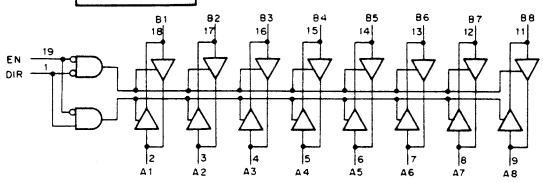

74ACT573SJ (NS) FLAT PACKAGE
SN74HC573BNS (TI) FLAT PACKAGE
SN74HC573NS (TI) FLAT PACKAGE

C-MOS 3-STATE OUTPUTS OCTAL LATCHES
– TOP VIEW –

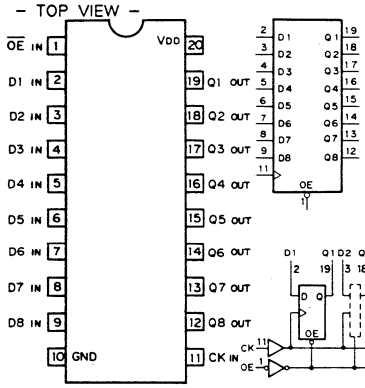

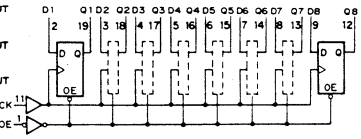

INPUTS			OUT
OE	CK	D	Q
0	1	1	1
0	1	0	0
0	0	X	Q_0
1	X	X	HI-Z

0 : LOW LEVEL
1 : HIGH LEVEL
X : DON'T CARE
HI-Z : HIGH IMPEDANCE
Q_0 : NO CHANGE

NOTE :

TYPE	VDD
AC HC	+2 to +6V
ACT HCT	+5V
TC74AC573	+2 to +5.5V

74F04PC (NS)
SN74ALS04BN (TI)
SN74LS04N (TI)

TTL INVERTER
– TOP VIEW –

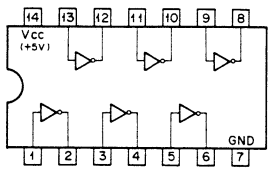

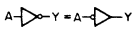

Y = $\overline{A}$

A	Y
0	1
1	0

0 ; LOW LEVEL
1 ; HIGH LEVEL

74F175PC (NS)

TTL D-TYPE FLIP-FLOP WITH CLEAR
– TOP VIEW –

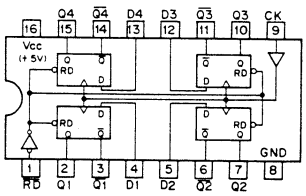

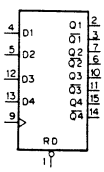

$\overline{RD}$	CK	D	Q	$\overline{Q}$
0	X	X	0	1
1	↑	1	1	0
1	↑	0	0	1
1	0	X	Q_0	$\overline{Q_0}$

0 ; LOW LEVEL
1 ; HIGH LEVEL
X ; DON'T CARE

74F374PC (NS)
SN74LS374N (TI)

TTL 3-STATE OUTPUTS OCTAL D-TYPE FLIP-FLOP
– TOP VIEW –

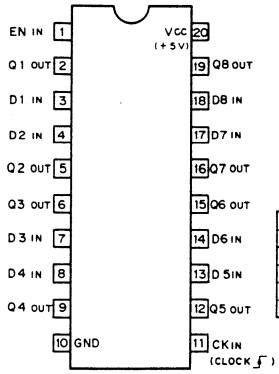

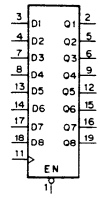

INPUTS			OUT
EN	D	CK	Q
0	1	↑	1
0	0	↑	0
0	X	0	Qo
1	X	X	HI-Z

0 ; LOW LEVEL
1 ; HIGH LEVEL
X ; DON'T CARE
HI-Z ; HIGH IMPEDANCE

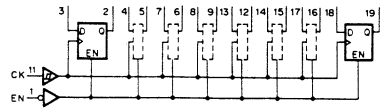

AD42020-1 (SONY)

ANALOG MULTIPLIER
– TOP VIEW –

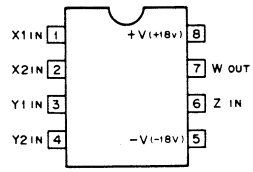

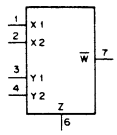

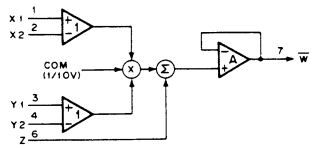

AK5327-VP (ASAHI KASEI)

C-MOS 16-BIT A/D CONVERTER
– TOP VIEW –

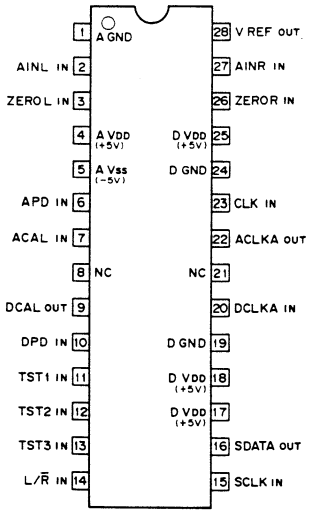

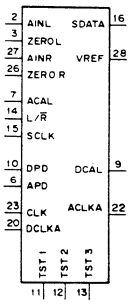

ACAL	; ANALOG CALIBRATION INPUT
ACLKA	; ANALOG SYSTEM CLOCK OUTPUT
AINL,R	; L,R CHANNEL ANALOG INPUTS
APD	; ANALOG POWER DOWN INPUT
CLK	; MASTER CLOCK INPUT
DCAL	; DIGITAL CALIBRATION OUTPUT
DCLKA	; DIGITAL SYSTEM CLOCK INPUT
DPD	; DIGITAL POWER DOWN INPUT
L/R̄	; CHANNEL SELECT INPUT
SCLK	; SERIAL DATA OUTPUT CLOCK INPUT
SDATA	; SERIAL DATA OUTPUT
TST1,2,3	; TEST INPUTS
VREF	; REFERENCE VOLTAGE OUTPUT (– 3.6V)
ZEROL,R	; L,R CHANNEL ZERO LEVEL INPUTS

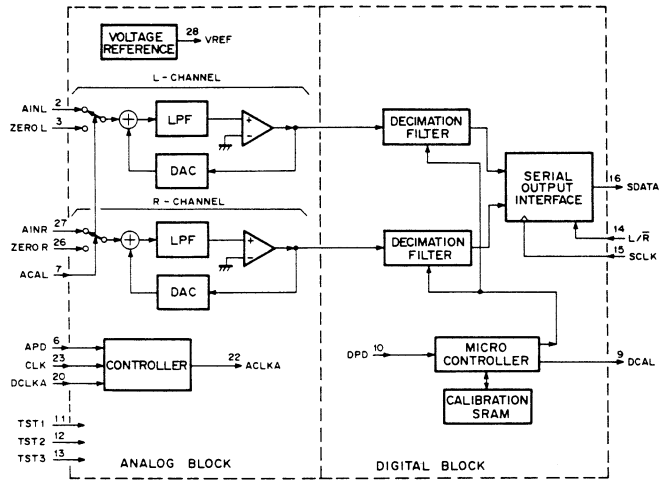

AM26LS30PC (ADVANCED MICRO DEVICES)

LINE DRIVER
– TOP VIEW –

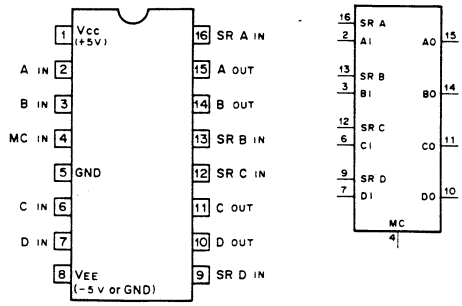

MC ; MODE CONTROL
SR ; SLEW RATE CONTROL

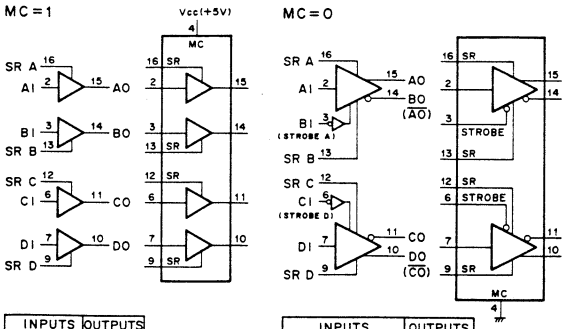

INPUTS		OUTPUTS
MC	A TO D	A TO D
1	0	0
1	1	1

0; LOW LEVEL
1; HIGH LEVEL

X;DON'T CARE
HI-Z;HIGH IMPEDANCE

INPUTS			OUTPUTS	
MC	STROBE	A & D	A & D	B & C
0	0	0	0	1
0	0	1	1	0
0	1	X	HI-Z	HI-Z

AM26LS31PC (ADVANCED MICRO DEVICES)

HIGH SPEED DIFFERENTIAL LINE DRIVER
– TOP VIEW –

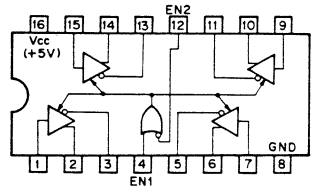

FUNCTION TABLE

EN2	EN1	OUTPUT
0	0	ENABLE
0	1	ENABLE
1	0	HI-Z
1	1	ENABLE

0 ; LOW LEVEL
1 ; HIGH LEVEL
HI-Z ; HIGH IMPEDANCE

AM26LS32PC (ADVANCED MICRO DEVICES)

HIGH SPEED DIFFERENTIAL LINE RECEIVER
– TOP VIEW –

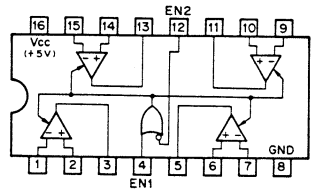

FUNCTION TABLE

EN2	EN1	OUTPUT
0	0	ENABLE
0	1	ENABLE
1	0	HI-Z
1	1	ENABLE

0; LOW LEVEL
1; HIGH LEVEL
HI-Z ; HIGH IMPEDANCE

	SENSE	INPUT VOLT
LS32	±200mV	±7V
LS33	±500mV	±15V

BX1040 (SONY)

SYNC SEPARATOR
- REAR VIEW -

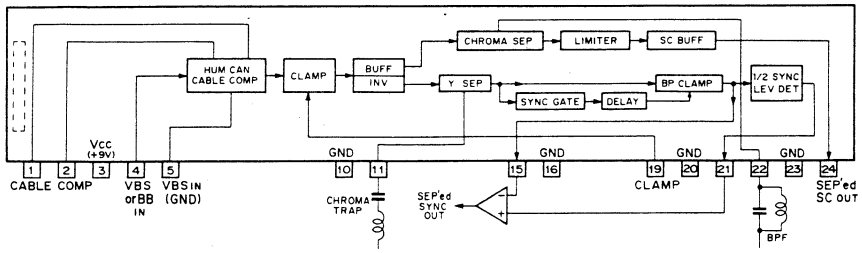

BX1229 (SONY)

FLOATING INPUT VIDEO AMPLIFIER
- REAR VIEW -

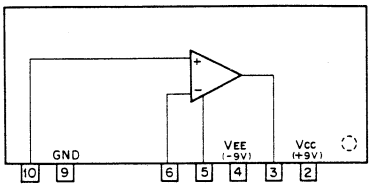

BX1321 (SONY)

REEL MOTOR DRIVE CONTROLLER
- PRINTED SIDE VIEW -

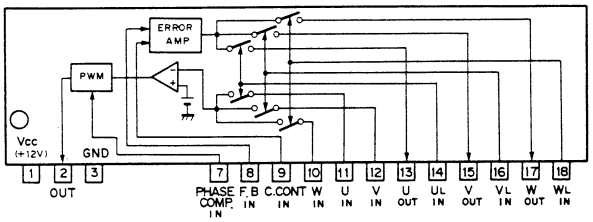

BP026 (MRT)
BX1281 (SONY)

POWER MOS FET DRIVER
- PRINTED SIDE VIEW -

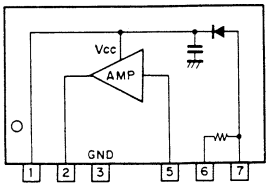

BX365A (SONY)

VIDEO AMPLIFIER
- SIDE VIEW -

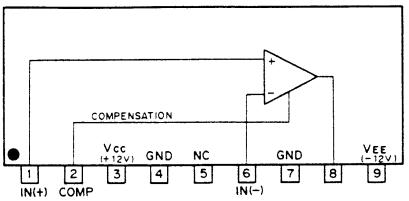

BX1320 (SONY)

DRUM AND CAPSTAN MOTOR DRIVE CONTROLLER
- PRINTED SIDE VIEW -

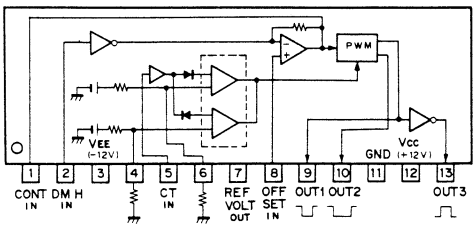

CF77074NT (TI)

CLOCK COUNTER
– TOP VIEW –

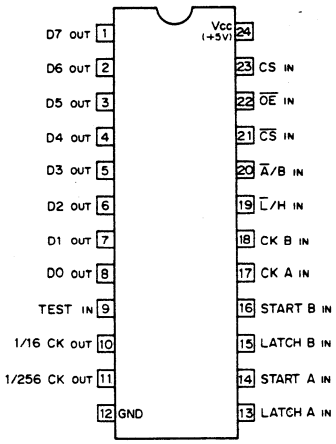

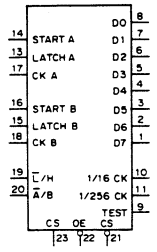

A/B ; DATA LATCH A/B SELECT INPUT
CKA,CKB; CLOCK INPUT (↑ → COUNT UP, ↑ → LATCH)
CS ; CHIP SELECT INPUT
D0-D7 ; DATA OUTPUT
L/H ; DATA LATCH LOW/HIGH SELECT INPUT
OE ; OUTPUT ENABLE INPUT

MODE SELECT

INPUT					OUTPUT
CS	CS	OE	A/B	L/H	D0-D7
0	X	X	X	X	HI-Z
1	0	0	0	0	LATCH A LOW BYTE
1	0	0	0	1	LATCH A HIGH BYTE
1	0	0	1	0	LATCH B LOW BYTE
1	0	0	1	1	LATCH B HIGH BYTE
X	1	X	X	X	HI-Z
X	X	1	X	X	

0; LOW LEVEL
1; HIGH LEVEL
X; DON'T CARE
HI-Z; HIGH IMPEDANCE

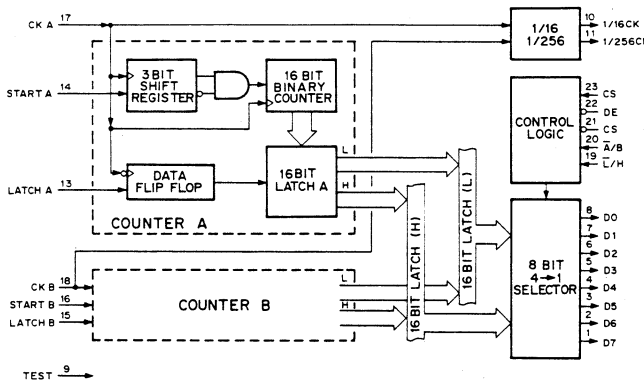

CX20160 (SONY)

TTL OCTAL 3 OR 4 STAGE SHIFT REGISTER
– TOP VIEW –

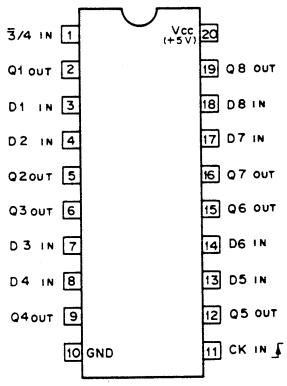

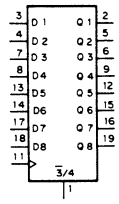

3/4; TOTAL STAGE SELECTION SIGNAL INPUT
H: 4 STAGES, L: 3 STAGES

CX23028 (SONY)

C-MOS SYNCHRONOUS ROTATIONAL DIRECTION DETECTOR
– TOP VIEW –

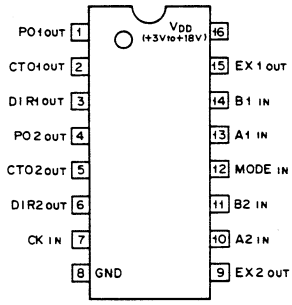

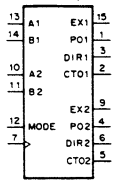

A,B ; SIGNAL INPUTS
EX ; A⊕B
PO ; A⊕B(SYNCHRONOUS)
DIR ; DIRECTION OUTPUT
CTO ; COUNT PULSE OUTPUT
MODE ; DIR1 & CTO1 MODE SELECT
⊕ ; EXCLUSIVE-OR

MODE="1"

DIRECTION OUTPUT "DIR"

INPUTS	DIR
A∠B	1
B∠A	0

TIMING CHART "CTO"

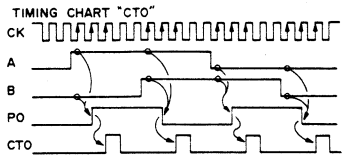

MODE="0"

DIRECTION OUTPUT "DIR"

INPUTS		DIR 1	DIR 2
CH1	CH2		
A1∠B1	A2∠B2	1	THE SAME FUNCTION OF MODE "1"
B1∠A1	A2∠B2	OUTPUT "1" AND "0" ALTERNATELY	
A1∠B1	B2∠A2		
B1∠A1	B2∠A2	0	

CTO 1 ; CTO 1 with MODE "0" = CTO 1 with MODE "1" + CTO 2
CTO 2 ; THE SAME FUNCTION OF MODE "1"

1 ; HIGH LEVEL
0 ; LOW LEVEL
A∠B ; THE PHASE OF SIGNAL A IS IN ADVANCE FOR THE PHASE OF B.

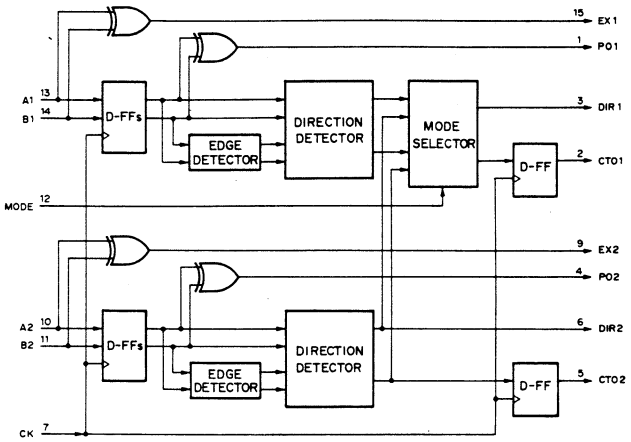

CX23038 (SONY)

C-MOS PROGRAMABLE SHIFT REGISTER
– TOP VIEW –

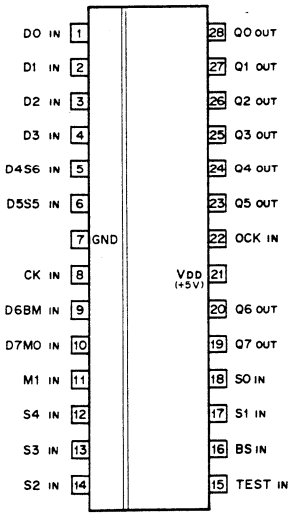

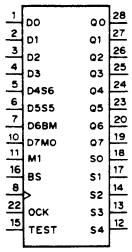

D0~D3 : DATA INPUTS
D4S6,D5S5 : DATA/SHIFT SELECT INPUTS
S0~S4 : SHIFT SELECT INPUTS
Q0~Q7 : DATA OUTPUTS
D6BM : DATA/BIT SLICE INPUT
D7MO,M1 : DATA/RANGE MODE INPUTS
BS : DATA/BIT SLICE CHANGE INPUT
CK : MAIN CLOCK
OCK : OUTPUT CLOCK
TEST : TEST INPUT (NORMALLY LOW)

CX23038(2/2)

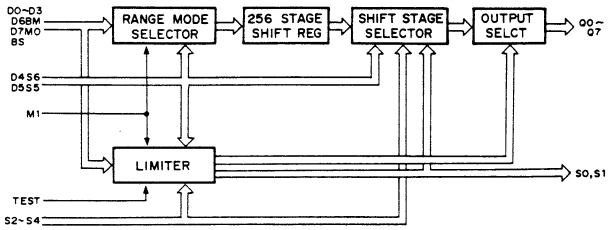

CX23065A (SONY)

N-MOS PHASE COMPARATOR WITH INVERSION AMPLIFIER
– PRINTED SIDE VIEW –

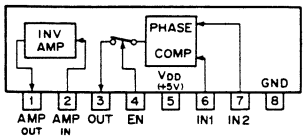

EN	OUT
1	ACTIVE
0	HIGH IMPEDANCE

1 ; HIGH LEVEL
0 ; LOW LEVEL

TIMING CHART

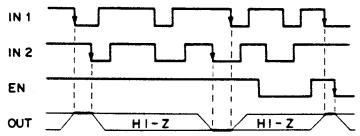

HI-Z ; HI-IMPEDANCE

CX23043 (SONY)

N-MOS SYNCHRONOUS 10-BIT BINARY COUNTER
– TOP VIEW –

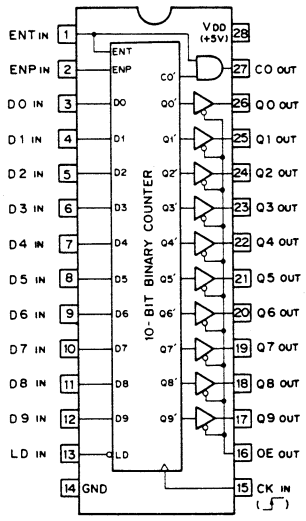

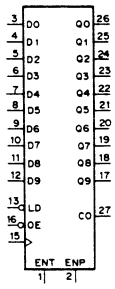

ENT	ENP	LD	FUNCTION
1	1	1	COUNT
0	X	1	NO COUNT
X	0	1	NO COUNT
X	X	0	LOAD

OE	Q0 to Q9 OUTPUT
0	Q0′ to Q9′
1	HI-IMPEDANCE

0 ; LOW LEVEL
1 ; HIGH LEVEL
X ; DON'T CARE

Q0 to Q9 ; OUTPUTS
Q0′ to Q9′ ; COUNTER OUTPUTS
D0 to D9 ; INPUTS DATA
CO ; CARRY OUTPUT
OE ; OUTPUT ENABLE
LD ; INPUT DATA LOAD
ENT ; CLOCK & CARRY OUT ENABLE
ENP ; CLOCK ENABLE
CK ; CLOCK INPUT

CARRY OUTPUT "CO"

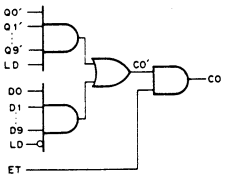

CX7907A (SONY)

C-MOS TIME CODE GENERATOR
– TOP VIEW –

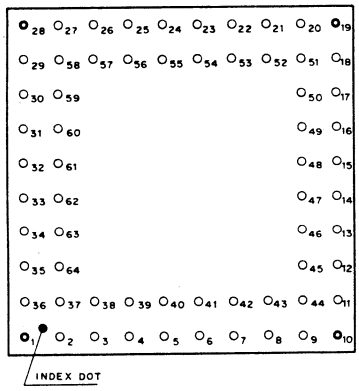

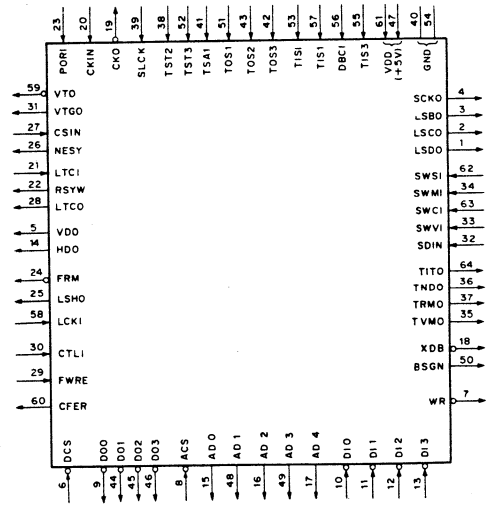

PIN ASSIGNMENT

Pin No.	IN	OUT	SYMBOL	Pin No.	IN	OUT	SYMBOL	Pin No.	IN	OUT	SYMBOL	Pin No.	IN	OUT	SYMBOL
1		o	LSDO	17		o	AD4	33	o		SWVI	49		o	AD3
2		o	LSCO	18		o	XDB	34	o		SWMI	50		o	BSGN
3		o	LSBO	19		o	CKO	35		o	TVMO	51	o		TOS1
4		o	SCKO	20	o		CKIN	36		o	TNDO	52	o		TST3
5		o	VDO	21	o		LTCI	37		o	TRMO	53	o		TISI
6	o		DCS	22		o	RSYW	38	o		TST2	54		o	GND
7		o	WR	23	o		PORI	39	o		SLCK	55	o		TIS3
8	o		ACS	24		o	FRM	40		o	GND	56	o		DBCI
9		o	DO0	25		o	LSHO	41	o		TSAI	57	o		TIS1
10	o		DI0	26		o	NESY	42	o		TOS3	58	o		LCKI
11	o		DI1	27	o		CSIN	43	o		TOS2	59		o	VTO
12	o		DI2	28		o	LTCO	44		o	DO1	60		o	CFER
13	o		DI3	29	o		FWRE	45		o	DO2	61	o		VDD(+5V)
14		o	HDO	30	o		CTLI	46		o	DO3	62	o		SWSI
15		o	AD0	31		o	VTGO	47	o		VDD(+5V)	63	o		SWCI
16		o	AD2	32	o		SDIN	48		o	AD1	64		o	TITO

BLOCK DIAGRAM

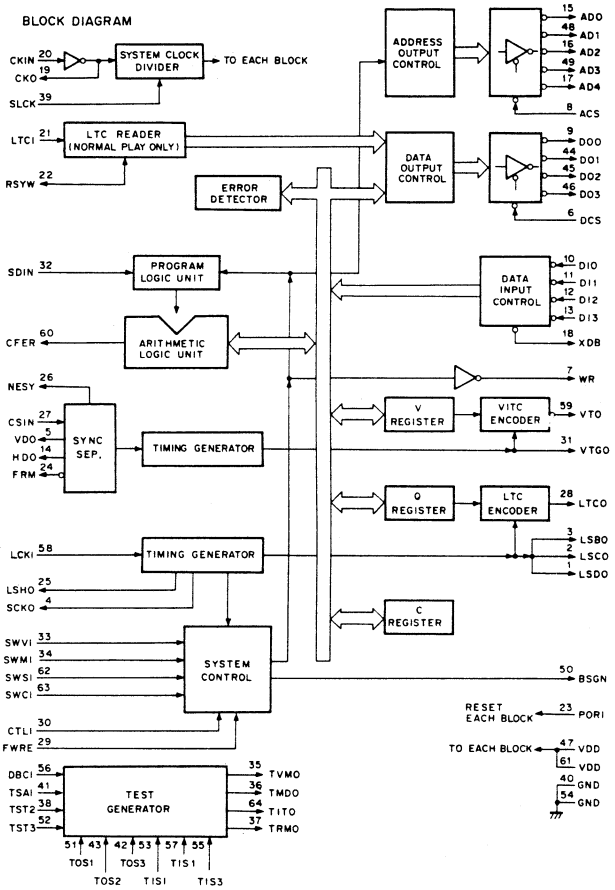

FUNCTIONAL PIN DEFINITION

Pin No.	SYMBOL	DESCRIPTION
8	ACS	ADDRESS LINE CHIP SELECT INPUT
15	AD0	ADDRESS DATA OUTPUT
48	AD1	
16	AD2	
49	AD3	
17	AD4	
50	BSGN	BUSY GENERATOR OUTPUT
60	CFER	COLOR FRAME ERROR FLAG OUTPUT
20	CKIN	SYSTEM CLOCK INPUT
19	CKO	CLOCK OUTPUT
27	CSIN	COMPOSITE SYNC INPUT
30	CTLI	CTL(TIMER) SIGNAL INPUT (⊓⊔)
6	DCS	DATA LINE CHIP SELECT INPUT (NEGATIVE-LOGIC)
10	DI0	DATA BUS INPUT (NEGATIVE-LOGIC)
11	DI1	
12	DI2	
13	DI3	
9	DO0	DATA BUS OUTPUT (NEGATIVE-LOGIC)
44	DO1	
45	DO2	
46	DO3	
24	FRM	FRAME SIGNAL OUTPUT (NEGATIVE-LOGIC)
29	FWRE	CTL DIRECTION INPUT
14	HDO	HORIZONTAL SYNC DRIVE OUTPUT
58	LCKI	LTC CLOCK INPUT (SMPTE 9.6kHz/EBU 8kHz)
3	LSBO	LTC SYNCHRONOUS SIGNAL B OUTPUT
2	LSCO	LTC SYNCHRONOUS SIGNAL C OUTPUT
1	LSDO	LTC SYNCHRONOUS SIGNAL D OUTPUT
25	LSHO	LTC SYNCHRONOUS SIGNAL H OUTPUT
21	LTCI	LTC INPUT
28	LTCO	LTC SIGNAL OUTPUT
26	NESY	LOST-SYNC FLAG OUTPUT
23	PORI	POWER ON RESET INPUT
22	RSYW	READ SYNC WORD OUTPUT
4	SCKO	SWITCHES SIGNAL IN CLOCK OUTPUT
32	SDIN	SERIAL DATA INPUT
39	SLCK	SELECT CLOCK INPUT
63	SWCI	SWITCHES SIGNAL C INPUT
34	SWMI	SWITCHES SIGNAL M INPUT
62	SWSI	SWITCHES SIGNAL S INPUT
33	SWVI	SWITCHES SIGNAL V INPUT
5	VDO	VERTICAL SYNC DRIVE OUTPUT
31	VTGO	VITC GATE SIGNAL OUTPUT
59	VTO	VITC SIGNAL OUTPUT (NEGATIVE-LOGIC)
7	WR	WRITE SIGNAL OUTPUT (NEGATIVE-LOGIC)
18	XDB	EXTERNAL DATA BUS IN FLAG OUTPUT (NEGATIVE-LOGIC)
47	VDD	POWER LINE (+5V)
61	VDD	
40	GND	GND LINE
54	GND	
56	DBCI	TEST INPUT (TO BE CONNECTED WITH GND)
57	TIS1	
55	TIS3	
53	TISI	
51	TOS1	
43	TOS2	
42	TOS3	
41	TSAI	
38	TST2	
52	TST3	
64	TITO	TEST OUTPUT (TO BE LEFT OPEN)
36	TNDO	
37	TRMO	
35	TVMO	

#32 SDIN

LSDO	LSCO	LSBO	SDIN	FUNCTION
0	0	0		INCREASE IN BIT 'FR or U1'
0	0	1		INCREASE IN BIT 'FT or U2'
0	1	0		INCREASE IN BIT 'SE or U3'
0	1	1		INCREASE IN BIT 'ST or U4'
1	0	0		INCREASE IN BIT 'MN or U5'
1	0	1		INCREASE IN BIT 'MT or U6'
1	1	0		INCREASE IN BIT 'HR or U7'
1	1	1		INCREASE IN BIT 'HT or U8'

NOTE;INFLUENCED BIT IS DECIDED BY FIRST 2 BITS OF SWCI.

#33 SWVI

LSDO	LSCO	LSBO	SWVI	FUNCTION
0	0	0	SW1A†	VITC POSITION SELECT A
0	0	1	SW1B†	
0	1	0	SW1C†	
0	1	1	SW1D†	
1	0	0	SW2A†	VITC POSITION SELECT B
1	0	1	SW2B†	
1	1	0	SW2C†	
1	1	1	SW2D†	

†;VITC POSITION SELECT

SW1D SW2D	SW1C SW2C	SW1B SW2B	SW1A SW2A	INSERTION LINE NTSC	INSERTION LINE PAL,SECAM
0	0	0	0	LINE 25	LINE 22,335
0	0	0	1	24	21,334
0	0	1	0	23	20,333
0	0	1	1	22	19,332
0	1	0	0	21	18,331
0	1	0	1	20	17,330
0	1	1	0	19	16,329
0	1	1	1	18	15,328
1	0	0	0	17	14,327
1	0	0	1	16	13,326
1	0	1	0	15	12,325
1	0	1	1	14	11,324
1	1	0	0	13	10,323
1	1	0	1	12	9,322
1	1	1	0	11	8,321
1	1	1	1	10	7,320

#34 SWMI

LSDO	LSCO	LSBO	SWMI	FUNCTION
0	0	0	x	INSERT SWMI DATA INTO BIT 'AS1'(NEGATIVE-LOGIC)
0	0	1	x	INSERT SWMI DATA INTO BIT 'AS2'(NEGATIVE-LOGIC)
0	1	0	x	INSERT SWMI DATA INTO BIT 'AS3'(NEGATIVE-LOGIC)
0	1	1	x	INSERT SWMI DATA INTO BIT 'AS4'(NEGATIVE-LOGIC)
1	0	0	x	INSERT SWMI DATA INTO BIT 'AS5'(NEGATIVE-LOGIC)
1	0	1	x	INSERT SWMI DATA INTO BIT 'AS6'(NEGATIVE-LOGIC)
1	1	0	ʃ	COLOR FRAME LOCK IN FIELD 1
1	1	1	0	COLOR FRAME OFF
1	1	1	1	COLOR FRAME ON

X;DON'T CARE.

#62 SWSI

LSDO	LSCO	LSBO	SWSI	FUNCTION
0	0	0	FBS1*	VITC FIELD MARK/ LTC PHASE CORRECTION POSITION SELECT
0	0	1	FBS2*	
0	1	0	FBS3*	
0	1	1	0	PHASE CORRECTION ON
0	1	1	1	PHASE CORRECTION OFF
1	0	0	S1**	SIGNAL FORMAT SELECT
1	0	1	S2**	
1	1	0	S4**	
1	1	1	x	-

x;DON'T CARE.

*;VITC FIELD MARK/LTC PHASE CORRECTION POSITION SELECT

FBS3	FBS2	FBS1	FIELD MARK POSITION	LTC BIT No.
0	0	0	AS1	10
0	0	1	AS2	11
0	1	0	AS3	27
0	1	1	AS4	43
1	0	0	AS5	58
1	0	1	AS6	59
1	1	0	-	-
1	1	1	-	-

NOTE;LTC PHASE CORRECTION BIT OF CX7907 IS FIXED ON BIT-63.

**;SIGNAL FORMAT SELECT

S4	S2	S1	FORMAT	FRAME
0	0	0	FILM	24
0	0	1	NOT ALLOWED	-
0	1	x		
1	0	0	PAL,SECAM	25
1	0	1	NOT ALLOWED	-
1	1	0	NTSC NDF	30
1	1	1	NTSC DF	30

DF;DROP FRAME
NDF;NON DROP FRAME
x;DON'T CARE.

0;LOW LEVEL
1;HIGH LEVEL

#63 SWCI

LSDO	LSCO	LSBO	SWCI	FUNCTION
0	0	0	0	U-BIT
0	0	0	1	TIME
0	0	1	0	CTL
0	0	1	1	TIME/U-BIT
0	1	0	x	-
0	1	1	0	DATA RESET ON*2
0	1	1	1	DATA RESET OFF
1	0	0	0	TIME DATA HOLD
1	0	0	1	TIME DATA RUN
1	0	1	1	EXTERNAL DATA LOAD*2
1	1	0	0	EXTRAPOLATION ON
1	1	0	1	EXTRAPOLATION OFF
1	1	1	x	-

IN/OUT DATA SELECT*1

x; DON'T CARE.
*1;REFER TO TIMING CHART(DATA OUT).
*2;INFLUENCED DATA IS DECIDED BY FIRST 2 BITS OF SWCI.

ERROR BYPASS ALGORITHM

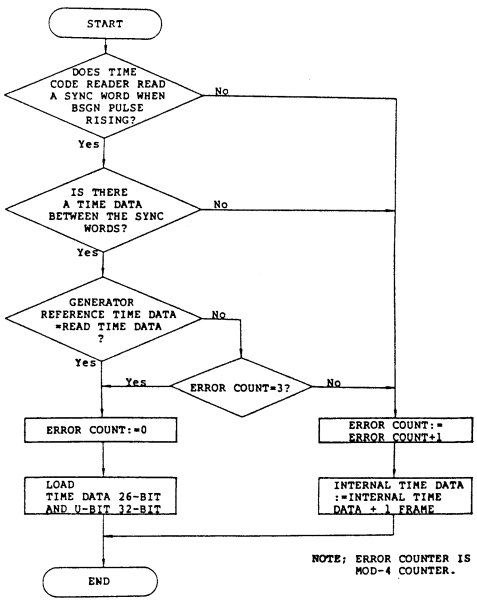

NOTE; ERROR COUNTER IS MOD-4 COUNTER.

TIMING CHART

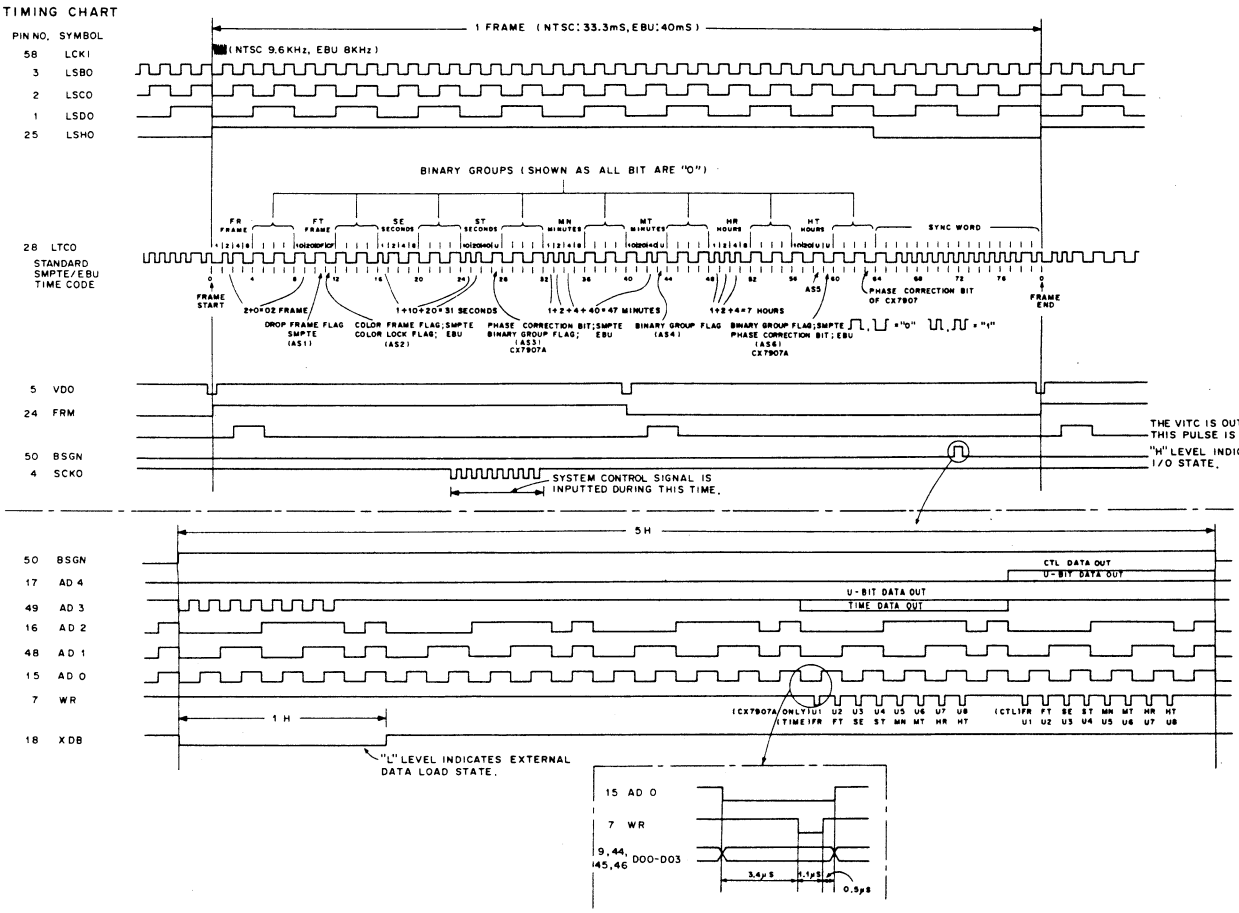

CX7912A (SONY)

C-MOS TIME CODE READER
– TOP VIEW –

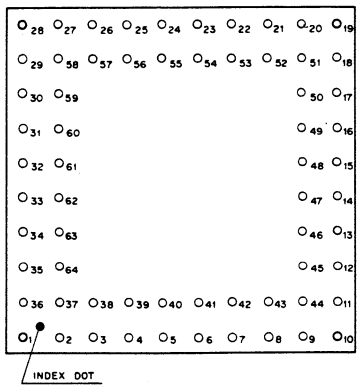

PIN ASSIGNMENT

PIN NO.	IN	OUT	SYMBOL	PIN NO.	IN	OUT	SYMBOL	PIN NO.	IN	OUT	SYMBOL	PIN NO.	IN	OUT	SYMBOL
1	O		S1	17		O	AD 4	33	O		SLCT	49		O	AD 3
2	O		RSTI	18		O	RDSY	34	O		OUDS	50		O	BSRL
3		O	DER	19		O	CK O	35	O		S4	51		O	TCT
4		O	BER	20	O		CK IN	36	O		S2	52	O		SCKI
5		O	FWRE	21		O	SCKO	37	O		TSG 1	53		O	TMO
6	O		DCS	22	O		DMSS	38	O		TSG 2	54		O	GND
7		O	WR	23	O		PN	39	O		TSG 3	55	O		XPN
8	O		ACS	24		O	PND	40		O	GND	56		O	AS6
9		O	DO O	25		O	AS5	41		O	H4 O	57		O	AS4
10		O	CFS A	26		O	AS3	42		O	H8 O	58		O	AS2
11		O	CFS B	27		O	AS 1	43		O	H 16 O	59		O	DCLK
12		O	CFS C	28		O	DATA	44		O	DO 1	60		O	CAL
13		O	CFS D	29	O		FRE	45		O	DO 2	61	O		VDD(+5V)
14		O	FLD	30	O		CTL I	46		O	DO3	62	O		SLTC
15		O	AD O	31	O		TC IN	47	O		VDD(+5V)	63	O		TPN
16		O	AD 2	32		O	OVF	48		O	AD 1	64	O		TEST

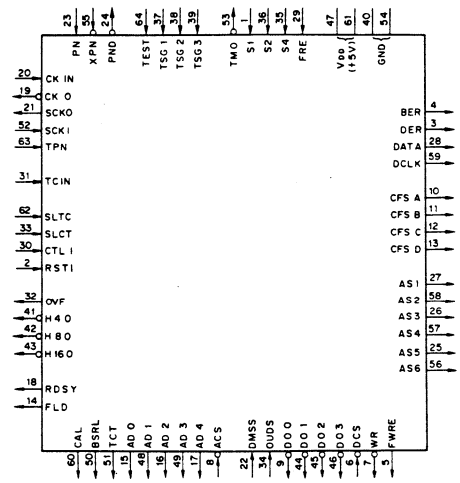

MODE SELECT

SLCT	SLTC	MODE
0	0	AUTO
0	1	TIME CODE
1	0	CTL
1	1	AUTO

CTL COUNT

FRE	RSTI	COUNT
0	X	DOWN COUNT
1	X	UP COUNT
X	⎍	RESET

SIGNAL FORMAT SELECT

S4	S2	S1	FORMAT	FRAME
0	0	0	FILM	24
0	0	1		
0	1	0		—
0	1	1		
1	0	0	PAL, SECAM	25
1	0	1	NOT ALLOWED	—
1	1	0	NTSC (NON DROP FRAME)	30
1	1	1	NTSC (DROP FRAME)	30

O : LOW LEVEL
1 : HIGH LEVEL
X : DON'T CARE

BLOCK DIAGRAM

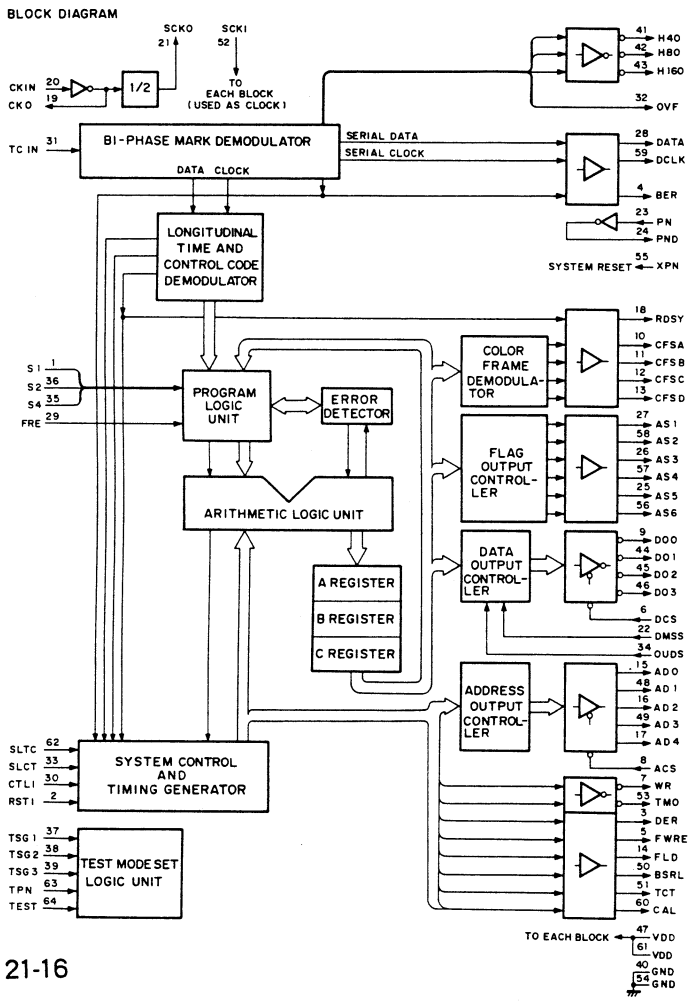

FUNCTIONAL PIN DEFINITION

Pin No.	SYMBOL	DESCRIPTION
8	ACS	ADDRESS LINE OUTPUT ENABLE (NEGATIVE-LOGIC)
15	AD0	ADDRESS DATA OUTPUT
48	AD1	
16	AD2	
49	AD3	
17	AD4	
27	AS1	PARALLEL DATA OUTPUT
58	AS2	
26	AS3	
57	AS4	
25	AS5	
56	AS6	
4	BER	BI-PHASE MARK ERROR (BIT ERROR) OUTPUT
50	BSRL	DATA OUT FLAG OUTPUT
60	CAL	CALCULATE OUT FLAG OUTPUT
10	CFSA	DEMODULATED COLOR FRAME OUTPUT
11	CFSB	
12	CFSC	
13	CFSD	
20	CKIN	CLOCK INPUT
19	CKO	CLOCK OUTPUT (NEGATIVE-LOGIC)
30	CTLI	CTL SIGNAL INPUT (⎍)
28	DATA	DEMODULATED SERIAL DATA OUTPUT
59	DCLK	DEMODULATED CLOCK OUTPUT
6	DCS	DATA LINE OUTPUT ENABLE (NEGATIVE-LOGIC)
3	DER	DEMODULATE DATA ERROR OUTPUT
22	DMSS	ASSIGNED DATA SELECT
9	DO0	DATA OUTPUT (NEGATIVE-LOGIC)
44	DO1	
45	DO2	
46	DO3	
14	FLD	FIELD DATA OUTPUT
29	FRE	CTL DIRECTION SIGNAL INPUT
5	FWRE	DEMODULATE DIRECTION SIGNAL OUTPUT
41	H4O	SPEED RANGE FLAG 4 OUTPUT (NEGATIVE-LOGIC)
42	H8O	SPEED RANGE FLAG 8 OUTPUT (NEGATIVE-LOGIC)
43	H16O	SPEED RANGE FLAG 16 OUTPUT (NEGATIVE-LOGIC)
34	OUDS	ERROR BYPASS ON/OFF SELECT
32	OVF	OVERFLOW FLAG OUTPUT
23	PN	POWER ON SIGNAL INPUT
24	PND	POWER ON SIGNAL OUPUT (NEGATIVE-LOGIC)
18	RDSY	READ SYNC WORD DATA OUTPUT
2	RSTI	CTL TIMER RESET INPUT (⎍)
1	S1	SIGNAL FORMAT SELECT S1
36	S2	SIGNAL FORMAT SELECT S2
35	S4	SIGNAL FORMAT SELECT S4
52	SCKI	SYSTEM CLOCK INPUT
21	SCKO	SYSTEM CLOCK OUTPUT
33	SLCT	SELECT CTL INPUT
62	SLTC	SELECT LTC INPUT
55	XPN	SYSTEM RESET SIGNAL INPUT (NEGATIVE-LOGIC)
31	TCIN	LONGITUDINAL TIME AND CONTROL CODE INPUT
51	TCT	INPUT SELECT FLAG OUTPUT
53	TMO	TIME OVER SIGNAL OUTPUT (NEGATIVE-LOGIC)
7	WR	WRITE SIGNAL OUTPUT (NEGATIVE-LOGIC)
47	VDD	POWER LINE (+5V)
61	VDD	
40	GND	GND LINE
54	GND	
64	TEST	TEST MODE SET INPUT (TO BE CONNECTED WITH GND)
63	TPN	
37	TSG1	
38	TSG2	
39	TSG3	

TIMING CHART

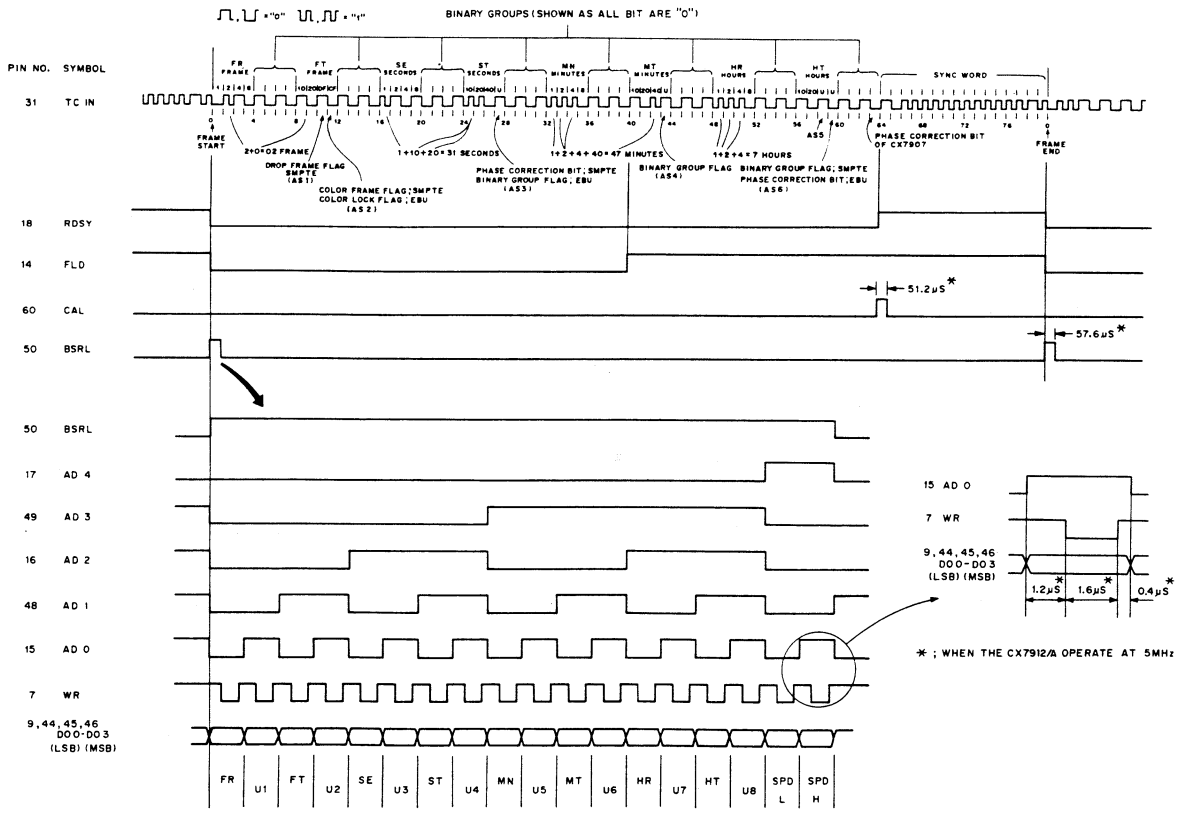

* ; WHEN THE CX7912/A OPERATE AT 5MHz

CXA1570M (SONY)

FLOATING VIDEO BUFFER/LINE DRIVER
– TOP VIEW –

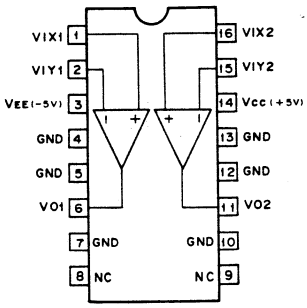

CXA1626Q (SONY) FLAT PACKAGE

C-MOS RECORD DRIVER
– TOP VIEW –

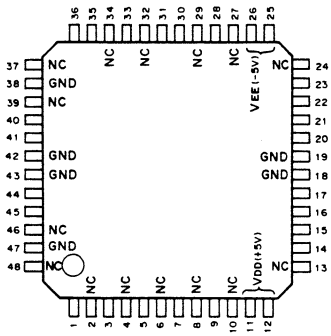

(VDD = + 5V)
(VEE = – 5V)

PIN No.	I/O	SIGNAL	PIN No.	I/O	SIGANL	PIN No.	I/O	SIGNAL	PIN No.	I/O	SIGNAL
1	–	CBB	13	–	NC	25	–	VEE	37	–	NC
2	–	NC	14	–	CAX	26	–	VEE	38	–	GND
3	I	CCK	15	–	CAY	27	–	NC	39	–	NC
4	–	NC	16	O	DAX	28	I	REN	40	I	BY
5	I	STR	17	O	DAY	29	–	NC	41	I	BX
6	–	NC	18	–	GND	30	I	A2	42	–	GND
7	I	DTA	19	–	GND	31	I	A1	43	–	GND
8	–	NC	20	O	DBX	32	–	NC	44	I	AY
9	I	ENA	21	O	DBY	33	–	CEX	45	I	AX
10	–	NC	22	–	CBX	34	–	NC	46	–	NC
11	–	VDD	23	–	CBY	35	I	SCKY	47	–	GND
12	–	VDD	24	–	NC	36	I	SCKX	48	–	NC

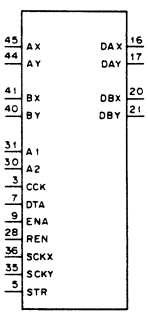

INPUT
A1 ; CHIP ADDRESS 1
A2 ; CHIP ADDRESS 2
AX ; A CH REC DATA (X)
AY ; A CH REC DATA (Y)
BX ; B CH REC DATA (X)
BY ; B CH REC DATA (Y)
CCK ; CONTROL CLOCK
DTA ; CONTROL DATA
ENA ; INHIBIT/ENABLE-1
REN ; INHIBIT/ENABLE-2
SCKX; REC CLOCK (X)
SCKY; REC CLCCK (Y)
STR ; CONTROL STROBE

OUTPUT
DAX ; A CH REC SIGNAL (X)
DAY ; A CH REC SIGNAL (Y)
DBX ; B CH REC SIGNAL (X)
DBY ; B CH REC SIGNAL (Y)

CXA1627Q (SONY) FLAT PACKAGE

C-MOS PB PLL
– TOP VIEW –

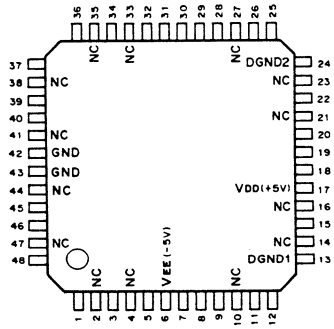

(VDD = + 5V)
(VEE = – 5V)

PIN No.	I/O	SIGNAL	PIN No.	I/O	SIGANL	PIN No.	I/O	SIGNAL	PIN No.	I/O	SIGNAL
1	I	DO1	13	–	DGND1	25	O	DT2X	37	–	SP2
2	–	NC	14	–	NC	26	O	DT2Y	38	–	NC
3	–	CV1X	15	O	LST1	27	–	NC	39	I	IN2X
4	–	NC	16	–	NC	28	O	CK2X	40	I	IN2Y
5	–	PR1	17	–	VDD	29	O	CK2Y	41	–	NC
6	–	VEE	18	I	STR	30	–	FR2	42	–	GND
7	–	FR1	19	I	DTA	31	–	VEE	43	–	GND
8	O	CK1Y	20	I	CCK	32	–	PR2	44	–	NC
9	O	CK1X	21	–	NC	33	–	NC	45	I	IN1X
10	–	NC	22	O	LST2	34	–	CV2X	46	I	IN1Y
11	O	DT1Y	23	–	NC	35	–	NC	47	–	NC
12	O	DT1X	24	–	DGND2	36	I	DO2	48	–	SP1

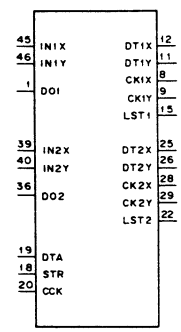

INPUT
CCK ; CONTROL CLOCK
DO1 ; 1 CH DO SIGNAL
DO2 ; 2 CH DO SIGNAL
DTA ; CONTROL DATA
IN1X ; 1 CH PB SIGNAL (X)
IN1Y ; 1 CH PB SIGNAL (Y)
IN2X ; 2 CH PB SIGNAL (X)
IN2Y ; 2 CH PB SIGNAL (Y)
STR ; CONTROL STROBE

OUTPUT
CK1X; 1 CH PB CLOCK (X)
CK1Y; 1 CH PB CLOCK (Y)
CK2X; 2 CH PB CLOCK (X)
CK2Y; 2 CH PB CLOCK (Y)
DT1X; 1 CH PB DATA (X)
DT1Y; 1 CH PB DATA (Y)
DT2X; 2 CH PB DATA (X)
DT2Y; 2 CH PB DATA (Y)
LST1 ; 1 CH LOCK STATUS
LST2 ; 2 CH LOCK STATUS

CXA1628Q (SONY) FLAT PACKAGE

C-MOS PB EQUALIZER

– TOP VIEW –

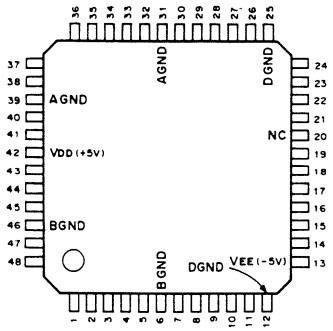

(VDD = + 5V)
(VEE = – 5V)

PIN No.	I/O	SIGNAL	PIN No.	I/O	SIGANL	PIN No.	I/O	SIGNAL	PIN No.	I/O	SIGNAL
1	–	BCN	13	–	VEE	25	–	DGND	37	I	AYIN
2	–	BCAG	14	I	BEEX	26	O	AXOUT	38	I	AXIN
3	–	BOFX	15	I	BEEY	27	O	AYOUT	39	–	AGND
4	–	BOFY	16	I	EET	28	O	ADO	40	O	AENV
5	O	MONB	17	I	CCK	29	–	AOFE	41	–	CVB
6	–	BGND	18	I	CDTA	30	I	ACEX	42	–	VDD
7	I	BCEX	19	I	STR	31	–	AGND	43	I	CSE2
8	–	BOFE	20	–	NC	32	O	MONA	44	I	CSE1
9	O	BDO	21	I	COM	33	–	AOFY	45	O	BENV
10	O	BXOUT	22	I	AEEX	34	–	AOFX	46	–	BGND
11	O	BYOUT	23	I	AEEY	35	–	ACAG	47	I	BYIN
12	–	DGND	24	–	VEE	36	–	ACN	48	I	BXIN

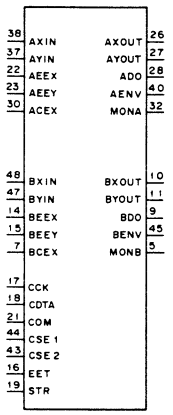

INPUT

ACEX ; A CH OFFSET ADJUST
AEEX ; A CH EE DATA (X)
AEEY ; A CH EE DATA (Y)
AXIN ; A CH PB SIGNAL (X)
AYIN ; A CH PB SIGNAL (Y)
BCEX ; B CH OFFSET ADJUST
BEEX ; B CH EE DATA (X)
BEEY ; B CH EE DATA (Y)
BXIN ; B CH PB SIGNAL (X)
BYIN ; B CH PB SIGNAL (Y)
CCK ; CONTROL CLOCK
CDTA ; CONTROL DATA
COM ; EE BIAS
CSE1 ; CHIP ADDRESS 1
CSE2 ; CHIP ADDRESS 2
EET ; EE/PB SELECT
STR ; CONTROL STROBE

OUTPUT

ADO ; A CH DO SIGNAL
AENV ; A CH ENVELOPE
AXOUT ; A CH PB DATA (X)
AYOUT ; A CH PB DATA (Y)
BDO ; B CH DO SIGNAL
BENV ; B CH ENVELOPE
BXOUT ; B CH PB DATA (X)
BYOUT ; B CH PB DATA (Y)
MONA ; A CH MONITOR
MONB ; B CH MONITOR

CXA1629Q (SONY) FLAT PACKAGE

TTL PARALLEL-TO-SERIAL CONVERTER (ECL OUTPUT)

– TOP VIEW –

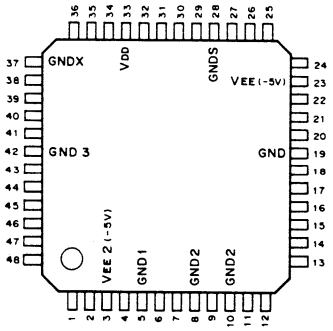

(VDD = + 5V)
(VEE = – 5V)
(VEE2 = – 5V)

PIN No.	I/O	SIGNAL	PIN No.	I/O	SIGANL	PIN No.	I/O	SIGNAL	PIN No.	I/O	SIGNAL
1	I	D16	13	I	D25	25	I	SIX	37	–	GNDX
2	I	D17	14	I	D24	26	O	PCY	38	I	PRC
3	–	VEE2	15	I	D23	27	O	PCX	39	I	PIX
4	O	S1Y	16	I	D22	28	–	GNDS	40	I	PIY
5	–	GND1	17	I	D21	29	O	SCX	41	I	EN1
6	O	S1X	18	I	D20	30	O	SCY	42	–	GND3
7	O	S2X	19	–	GND	31	–	VR3	43	I	D10
8	–	GND2	20	I	EN2	32	–	VR3X	44	I	D11
9	O	S2Y	21	–	VR1	33	–	VDD	45	I	D12
10	–	GND2	22	–	VR2	34	O	CEX	46	I	D13
11	I	D27	23	–	VEE	35	I	FV	47	I	D14
12	I	D26	24	I	SIY	36	I	TRH	48	I	D15

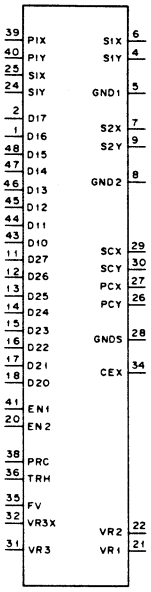

INPUT

D10 – D17; CHANNEL1 DATA
D20 – D27; CHANNEL2 DATA
EN1 ; CHANNEL1 ENABLE
EN2 ; CHANNEL2 ENABLE
FV ; VCO FREERUN ADJUST
PIX ; PARALLEL CLOCK X
PIY ; PARALLEL CLOCK Y
PRC ; PARALLEL REF. CLOCK
SIX ; SERIAL CLOCK X
SIY ; SERIAL CLOCK Y
TRH ; REF. CLOCK CONTROL

OUTPUT

CEX ; P. D OUTPUT
PCX ; PARALLEL CLOCK X
PCY ; PARALLEL CLOCK Y
S1X ; CHANNEL1 SERIAL DATA X
S1Y ; CHANNEL1 SERIAL DATA Y
S2X ; CHANNEL2 SERIAL DATA X
S2Y ; CHANNEL2 SERIAL DATA Y
SCX ; SERIAL CLOCK X
SCY ; SERIAL CLOCK Y

CXB1008G (SONY)

ECL SERIAL-TO-PARALLEL CONVERTER (TTL OUTPUT)
- TOP VIEW -

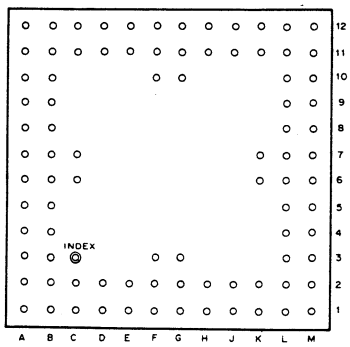

VCC=+5V
VEE=-5.2V

PIN	I/O	SYMBOL	PIN	I/O	SYMBOL	PIN	I/O	SYMBOL	PIN	I/O	SYMBOL
A1	-	GND	B11	-	VCC	G1	O	ODB5	L3	I	IDBX
A2	-	GND	B12	-	GND	G2	O	ODB4	L4	I	ICBX
A3	O	OCB2	C1	-	OG16	G3	-	GND	L5	I	IRBY
A4	-	OG14	C2	-	OG15	G10	-	GND	L6	I	IEBY
A5	-	OG13	C6	-	VEE	G11	O	ODA4	L7	I	IEAY
A6	O	OTB1	C7	-	VEE	G12	O	ODA5	L8	I	IRAY
A7	O	OTA1	C11	-	OG08	H1	O	ODB7	L9	I	ICAX
A8	-	OG10	C12	-	OG07	H2	O	ODB6	L10	I	IDAX
A9	-	OG09	D1	-	OG18	H11	O	ODA6	L11	-	VCC
A10	O	OCA2	D2	-	OG17	H12	O	ODA7	L12	-	GND
A11	-	GND	D11	-	OG06	J1	-	OG19	M1	-	GND
A12	-	GND	D12	-	OG05	J2	-	OG20	M2	-	GND
B1	-	GND	E1	O	ODB0	J11	-	OG03	M3	I	IDBY
B2	-	VCC	E2	O	ODB1	J12	-	OG04	M4	I	ICBY
B3	O	OCB3	E11	O	ODA1	K1	-	OG21	M5	I	IRBX
B4	O	OCB1	E12	O	ODA0	K2	-	OG22	M6	I	IEBX
B5	-	OG12	F1	O	ODB2	K6	-	VEE	M7	I	IEAX
B6	O	OTB2	F2	O	ODB3	K7	-	VEE	M8	I	IRAX
B7	O	OTA2	F3	-	GND	K11	-	OG01	M9	I	ICAY
B8	-	OG11	F10	-	GND	K12	-	OG02	M10	I	IDAY
B9	O	OCA1	F11	O	ODA3	L1	-	GND	M11	-	GND
B10	O	OCA3	F12	O	ODA2	L2	-	VCC	M12	-	GND

A CHANNEL

INPUT
ICAX,ICAY ; SERIAL CLOCK INPUTS
IDAX,IDAY ; SERIAL DATA INPUTS
IEAX,IEAY ; ECL DATA INPUTS
IRAX,IRAY ; PHASE RESET INPUTS

OUTPUT
OCA1,OCA2 ; ÷8 COUNTER CLOCK OUTPUTS
OCA3 ; ÷4 COUNTER CLOCK OUTPUT
ODA0-ODA7 ; PARALLEL DATA OUTPUTS
OTA1,OTA2 ; ECL-TO-TTL CONVERTED DATA OUTPUTS

B CHANNEL

INPUT
ICBX,ICBY ; SERIAL CLOCK INPUTS
IDBX,IDBY ; SERIAL DATA INPUTS
IEBX,IEBY ; ECL DATA INPUTS
IRBX,IRBY ; PHASE RESET INPUTS

OUTPUT
OCB1,OCB2 ; ÷8 COUNTER CLOCK OUTPUTS
OCA3 ; ÷4 COUNTER CLOCK OUTPUT
ODA0-ODA7 ; PARALLEL DATA OUTPUTS
OTA1,OTA2 ; ECL-TO-TTL CONVERTED DATA OUTPUTS

TEST TERMINAL

OG01-OG22 ; TEST TERMINAL

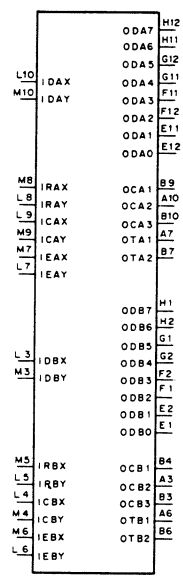

CXD1095Q (SONY) FLAT PACKAGE

C-MOS I/O PORT EXPANDER
- TOP VIEW -

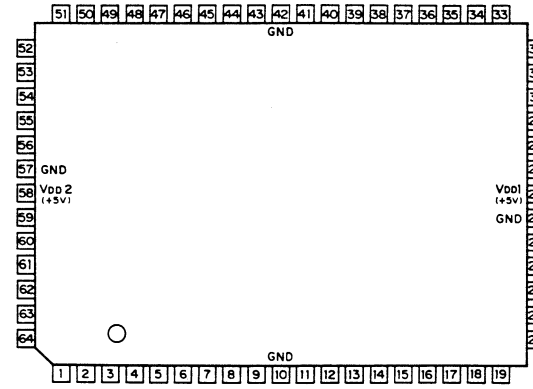

PIN NO.	IN	OUT	SYMBOL	PIN NO.	IN	OUT	SYMBOL	PIN NO.	IN	OUT	SYMBOL	PIN NO.	IN	OUT	SYMBOL
1			NC	17	O	O	PC6	33			NC	49	O	O	PX0
2			NC	18	O	O	PC7	34			NC	50	O	O	PX1
3	O	O	PB1	19			NC	35	O	O	D3	51			NC
4	O	O	PB2	20	O	O	PD0	36	O	O	D4	52	O	O	PX2
5	O	O	PB3	21	O	O	PD1	37	O	O	D5	53	O	O	PX3
6	O	O	PB4	22	O	O	PD2	38	O	O	D6	54	O	O	PA0
7	O	O	PB5	23	O	O	PD3	39	O	O	D7	55	O	O	PA1
8	O	O	PB6	24	O	O	PD4	40	O		CLR	56	O	O	PA2
9	O	O	PB7	25			GND	41	O		RST	57			GND
10			GND	26	O		VDD (+5V)	42			GND	58	O		VDD (+5V)
11	O	O	PC0	27	O	O	PD5	43	O		WR	59	O	O	PA3
12	O	O	PC1	28	O	O	PD6	44	O		RD	60	O	O	PA4
13	O	O	PC2	29	O	O	PD7	45	O		CS	61	O	O	PA5
14	O	O	PC3	30	O	O	D0	46	O		A0	62	O	O	PA6
15	O	O	PC4	31	O	O	D1	47	O		A1	63	O	O	PA7
16	O	O	PC5	32	O	O	D2	48	O		A2	64	O	O	PB0

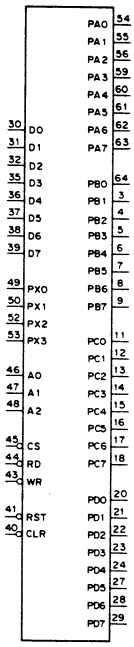

CS	RD	WR	A2	A1	A0	MODE
0	0	1	0	0	0	PORT A → DATA BUS
0	0	1	0	0	1	PORT B → DATA BUS
0	0	1	0	1	0	PORT C → DATA BUS
0	0	1	0	1	1	PORT D → DATA BUS
0	0	1	1	0	0	PORT X → DATA BUS
0	0	1	1	0	1	——
0	0	1	1	1	0	——
0	0	1	1	1	1	——
0	1	0	0	0	0	DATA BUS → PORT A
0	1	0	0	0	1	DATA BUS → PORT B
0	1	0	0	1	0	DATA BUS → PORT C
0	1	0	0	1	1	DATA BUS → PORT D
0	1	0	1	0	0	DATA BUS → PORT X
0	1	0	1	0	1	——
0	1	0	1	1	0	DATA BUS → CTL REG.1
0	1	0	1	1	1	DATA BUS → CTL REG.2
1	X	X	X	X	X	DATA BUS ; HI-Z

0 ; LOW LEVEL
1 ; HIGH LEVEL
X ; DON'T CARE
HI-Z, HIGH IMPEDANCE

D0-D7 ; DATA BUS INPUTS/OUTPUTS
CS ; CHIP SELECT INPUT
RD ; READ STROBE INPUT
WR ; WRITE STROBE INPUT
A0-A2 ; ADDRESS INPUT
RST ; RESET INPUT
CLR ; CLEAR INPUT
PA0-PA7 ; PORT A INPUTS/OUTPUTS
PB0-PB7 ; PORT B INPUTS/OUTPUTS
PC0-PC7 ; PORT C INPUTS/OUTPUTS
PD0-PD7 ; PORT D INPUTS/OUTPUTS
PX0-PX3 ; PORT X INPUTS/OUTPUTS

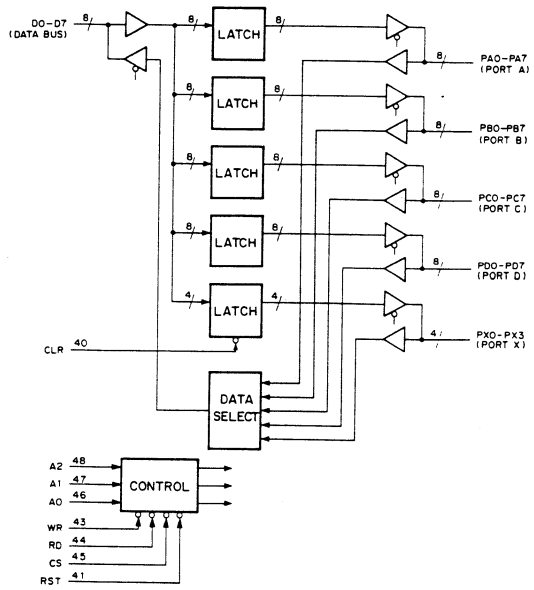

CXD1317Q (SONY) FLAT PACKAGE

C-MOS 8-CH PWM D/A CONVERTER

– TOP VIEW –

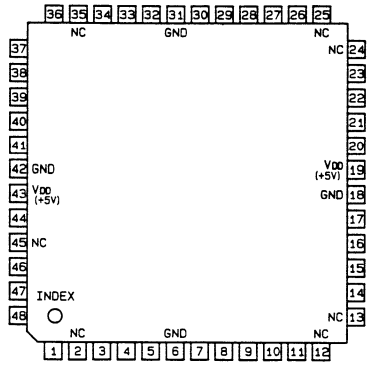

PIN NO.	I/O	SYMBOL	PIN NO.	I/O	SYMBOL	PIN NO.	I/O	SYMBOL	PIN NO.	I/O	SYMBOL
1	I	WR	13	—	NC	25	—	NC	37	I	A1
2	—	NC	14	I	DB0	26	O	Q0	38	I	A2
3	O	P0	15	I	DB1	27	O	Q1	39	I	A3
4	O	P1	16	I	DB2	28	O	Q2	40	I	CK IN
5	O	P2	17	I	DB3	29	O	Q3	41	O	CK OUT
6	—	GND	18	—	GND	30	O	Q4	42	—	GND
7	O	P3	19	—	VDD (+5V)	31	—	GND	43	—	VDD (+5V)
8	O	P4	20	I	DB4	32	O	Q5	44	I	TEST1
9	O	P5	21	I	DB5	33	O	Q6	45	—	NC
10	O	P6	22	I	DB6	34	O	Q7	46	I	CS2
11	O	P7	23	I	DB7	35	—	NC	47	I	CS1
12	—	NC	24	—	NC	36	I	A0	48	I	CS0

A1–A3; ADDRESS INPUTS
CS0–CS2; CHIP SELECT INPUTS
DB0–DB7; DATA INPUTS
P0–P7; PWM OUTPUTS
Q0–Q7; FREE RUN COUNTER OUTPUTS
WR; WRITE ENABLE INPUT

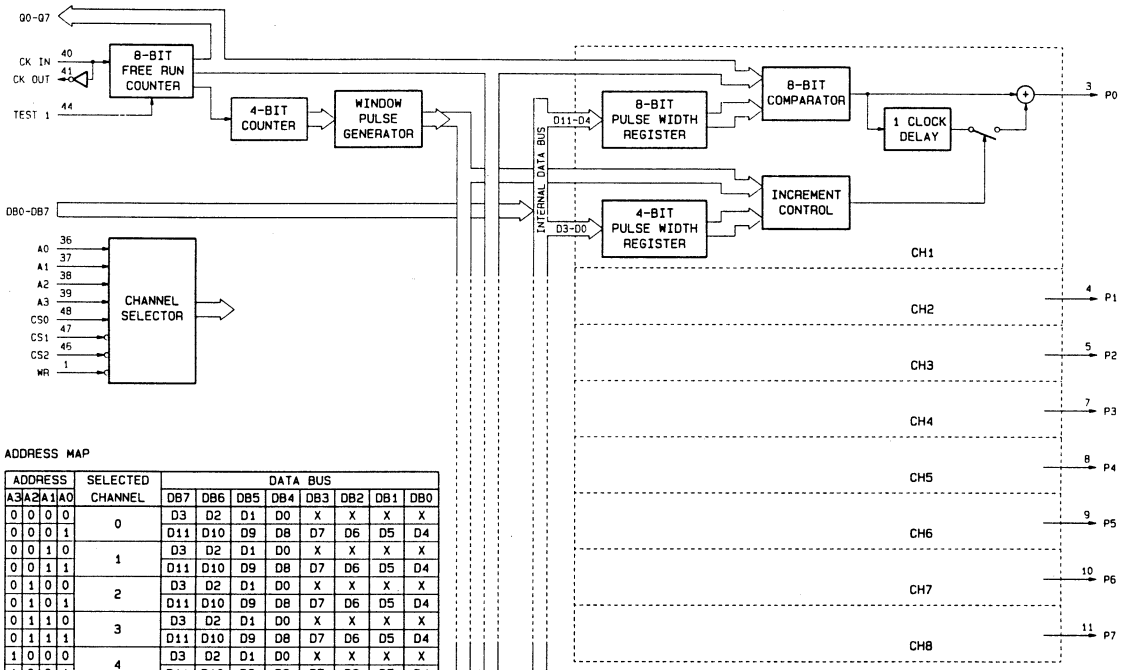

ADDRESS MAP

ADDRESS				SELECTED	DATA BUS							
A3	A2	A1	A0	CHANNEL	DB7	DB6	DB5	DB4	DB3	DB2	DB1	DB0
0	0	0	0	0	D3	D2	D1	D0	X	X	X	X
0	0	0	1		D11	D10	D9	D8	D7	D6	D5	D4
0	0	1	0	1	D3	D2	D1	D0	X	X	X	X
0	0	1	1		D11	D10	D9	D8	D7	D6	D5	D4
0	1	0	0	2	D3	D2	D1	D0	X	X	X	X
0	1	0	1		D11	D10	D9	D8	D7	D6	D5	D4
0	1	1	0	3	D3	D2	D1	D0	X	X	X	X
0	1	1	1		D11	D10	D9	D8	D7	D6	D5	D4
1	0	0	0	4	D3	D2	D1	D0	X	X	X	X
1	0	0	1		D11	D10	D9	D8	D7	D6	D5	D4
1	0	1	0	5	D3	D2	D1	D0	X	X	X	X
1	0	1	1		D11	D10	D9	D8	D7	D6	D5	D4
1	1	0	0	6	D3	D2	D1	D0	X	X	X	X
1	1	0	1		D11	D10	D9	D8	D7	D6	D5	D4
1	1	1	0	7	D3	D2	D1	D0	X	X	X	X
1	1	1	1		D11	D10	D9	D8	D7	D6	D5	D4

D11 (MSB)
0; LOW LEVEL
1; HIGH LEVEL
X; DON'T CARE

CXD2210Q (SONY) FLAT PACKAGE

C-MOS Y-ADD

– TOP VIEW –

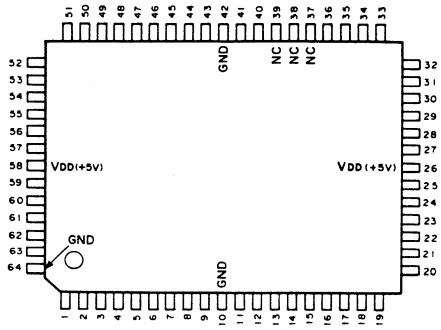

(VDD = + 5V)

PIN No.	I/O	SIGNAL	PIN No.	I/O	SIGNAL	PIN No.	I/O	SIGNAL	PIN No.	I/O	SIGNAL
1	I	DTIN0	17	I	PB O/E	33	I	TEST1	49	O	DOTB1
2	I	DTIN1	18	I	V TIMING	34	I	TEST2	50	O	DOTB0
3	I	DTIN2	19	I	L ; THRU	35	I	TEST3	51	–	GND
4	I	DTIN3	20	I	L ; SECAM	36	I	L ; SHIFT	52	O	DOTA9
5	I	DTIN4	21	I	L ; DT	37	–	NC	53	O	DOTA8
6	I	DTIN5	22	I	L ; BID	38	–	NC	54	O	DOTA7
7	I	DTIN6	23	I	L ; ADDINH	39	–	NC	55	O	DOTA6
8	I	DTIN7	24	I	L ; DOCINH	40	O	DOTB9	56	O	DOTA5
9	I	DTIN8	25	I	L ; 2LDOC	41	O	DOTB8	57	O	DOTA4
10	–	GND	26	–	VDD	42	–	GND	58	–	VDD
11	I	DTIN9	27	I	UP/DOWN	43	O	DOTB7	59	O	DOTA3
12	I	RCK	28	I	MOD1	44	O	DOTB6	60	O	DOTA2
13	I	L ; B-Y	29	I	MOD2	45	O	DOTB5	61	O	DOTA1
14	I	H SYNC	30	I	MOD3	46	O	DOTB4	62	O	DOTA0
15	I	ADVVBLK	31	I	MOD4	47	O	DOTB3	63	I	OE
16	I	REF O/E	32	I	CLR	48	O	DOTB2	64	–	GND

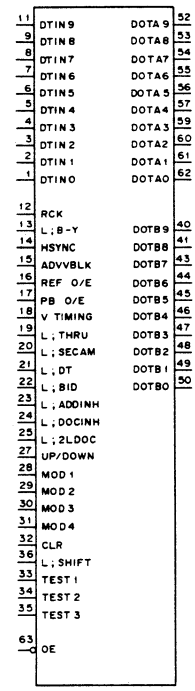

INPUT

ADVVBLK	; ADVANCED V-BLANKING
CLR	; CLEAR
DTIN9 – DTIN0	; 10-BIT VIDEO DATA INPUTS
HSYNC	; H TIMING PULSE
L : 2LDOC	; 2 LINE DOC
L : ADDINH	; ADD INHIBIT
L : B-Y	; B-Y/R-Y
L : BID	; VARIABLE PLAY MODE
L : DOCINH	; DROP-OUT COMPENSATION INHIBIT
L : DT	; DT MODE
L : SECAM	; SECAM MODE
L : SHIFT	; SHIFT MODE
L : THRU	; DATA THROUGH
MOD1 – MOD4	; MODE CONTROL
OE	; OUTPUT ENABLE
PB O/E	; PB ODD/EVEN
RCK	; SYSTEM CLOCK
REF O/E	; REFERENCE ODD/EVEN
TEST1 – TEST3	; TEST CONTROL
UP/DOWN	; 1H UP/DOWN
V TIMING	; V TIMING PULSE

OUTPUT

DOTA9 – DOTA0	; 10-BIT VIDEO DATA OUTPUTS-A
DOTB9 – DOTB0	; 10-BIT VIDEO DATA OUTPUTS-B

CXD8046G (SONY)

C-MOS GATE ARRAY
– BOTTOM VIEW –

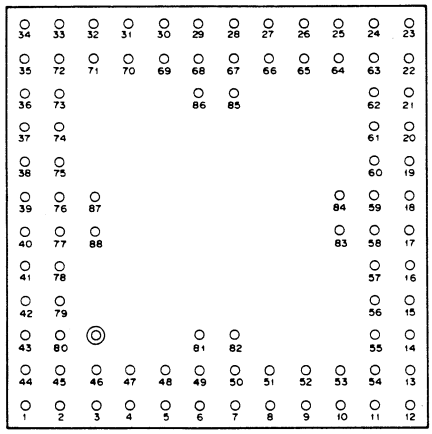

(V_{DD} = 5V)

PIN No.	I/O	SIGNAL	PIN No.	I/O	SIGNAL	PIN No.	I/O	SIGNAL	PIN No.	I/O	SIGNAL
1	I	IFDD	23	–	N.C	45	I	SL0C	67	O	EXTH
2	I	IHDD	24	I	RS5F	46	I	SL2D	68	O	OHD
3	I	SL1D	25	I	ILK	47	I	CK13D	69	O	OVD
4	I	SL0D	26	I	I48K	48	O	FCNT0	70	O	OFD
5	O	FCNT1	27	I	IFDB	49	O	FCNT2	71	O	O48K
6	O	FCNT3	28	I	IHDB	50	O	FCNT4	72	O	O61M
7	O	FCNT5	29	I	ICSY	51	O	FCNT6	73	O	OSTP
8	O	FCNT7	30	O	OFTP	52	I	TSTA	74	O	OHTP
9	O	FCNT8	31	I	SLCN	53	I	TSTB	75	I	CK27M
10	O	FCNT9	32	O	OREFB	54	O	SCNT2	76	O	O5FR
11	O	SCNT0	33	O	OVALB	55	O	SCNT4	77	O	CK90M
12	–	GND	34	–	GND	56	–	N.C	78	O	OFRM
13	O	SCNT1	35	O	OREFA	57	O	SCNT7	79	I	CK13C
14	O	SCNT3	36	O	OVALA	58	O	SCNT9	80	I	SL1C
15	O	SCNT5	37	O	CK15M	59	O	SCNTB	81	–	GND
16	O	SCNT6	38	O	CK22M	60	O	SCNTD	82	–	V_{DD}
17	O	SCNT8	39	O	CK67M	61	I	CK12M	83	–	V_{DD}
18	O	SCNTA	40	O	CK13M	62	I	MD56	84	–	GND
19	O	SCNTC	41	O	OHDA	63	I	TST1	85	–	GND
20	I	SLVA	42	I	IFDC	64	O	LOCKA	86	–	V_{DD}
21	I	RSLA	43	I	IHDC	65	O	LOCKB	87	–	V_{DD}
22	I	RSLB	44	I	SL2C	66	O	OMD	88	–	GND

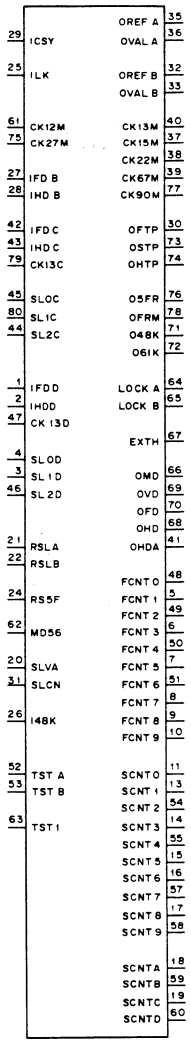

INPUT

CK12M	; AUDIO 12.288MHz CLOCK
CK13C	; CLOCK FOR REFERENCE INPUT C
CK13D	; CLOCK FOR REFERENCE INPUT D
CK27M	; VIDEO 27.0MHz CLOCK
I48K	; AUDIO 48kHz INPUT
ICSY	; COMPOSITE SYNC INPUT
IFDB	; FRAME PULSE OF REFERENCE INPUT B
IFDC	; FRAME PULSE OF REFERENCE INPUT C
IFDD	; FRAME PULSE OF REFERENCE INPUT D
IHDB	; H SYNC PULSE OF REFERENCE INPUT B
IHDC	; H SYNC PULSE OF REFERENCE INPUT C
IHDD	; H SYNC PULSE OF REFERENCE INPUT D
ILK	; INHIBITION OF AUDIO PLL REFERENCE
MD56	; 525/625 SYSTEM MODE
RS5F	; AUDIO 5 FRAME RESET INPUT
RSLA, RSLB	; REFERENCE INPUT SELECT CONTROL
SL0C – SL2C	; DELAY CONTROL OF REFERENCE INPUTS C
SL0D – SL2D	; DELAY CONTROL OF REFERENCE INPUTS D
SLCN	; SEGMENT/HORIZONTAL COUNT SELECT CONTROL
SLVA	; VIDEO/AUDIO REFERENCE SELECT
TST1	; TEST USE
TSTA, TSTB	; TEST USE

OUTPUT

CM13M	; 13.5MHz CLOCK
CK15M	; 1.5MHz CLOCK
CK22M	; 2.25MHz CLOCK
CK67M	; 6.75MHz CLOCK
CK90M	; 9.0MHz CLOCK
EXTH	; REFERENCE INPUT DETECT
FCNT0 – FCNT9	; FRAME COUNT OUTPUTS (FCNT9 : MSB)
LOCK A, LOCK B	; LOCK STATE OUTPUTS OF PLL A (VIDEO), PLL B (AUDIO)
O48K	; 48kHz OUTPUT
O5FR	; AUDIO 5 FRAME OUTPUT
O61M	; 6.144MHz OUTPUT
OFD	; FRAME PULSE OF SELECTED REFERENCE
OFRM	; FRAME PULSE
OFTP	; FRAME TOP PULSE
OHD	; H SYNC PULSE OF SELECTED REFERENCE
OHDA	; H SYNC PULSE
OHTP	; H SYNC TOP PULSE
OMD	; DETECTED 525/625 SYSTEM MODE
OREFA, OREFB	; REFERENCE PULSE OF PLL A, PLL B
OSTP	; SEGMENT/HORIZONTAL COUNT TOP PULSE
OVALA, OVALB	; VALIABLE PULSE OF PLL A, PLL B
OVD	; V PULSE OF COMPOSITE SYNC INPUT
SCNT0 – SCNT9	; SEGMENT/HORIZONTAL COUNTER OUTPUTS
SCNTA – SCNTD	; SEGMENT/HORIZONTAL COUNTER OUTPUTS (SCNTD : MSB)

CXD8068G (SONY)

C-MOS 4 : 2 : 2 COMPONENT DIGITAL VIDEO
PARALLEL INTERFACE ENCODER
– BOTTOM VIEW –

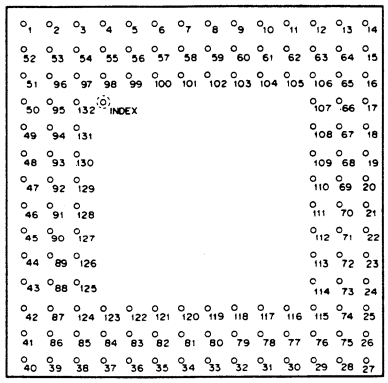

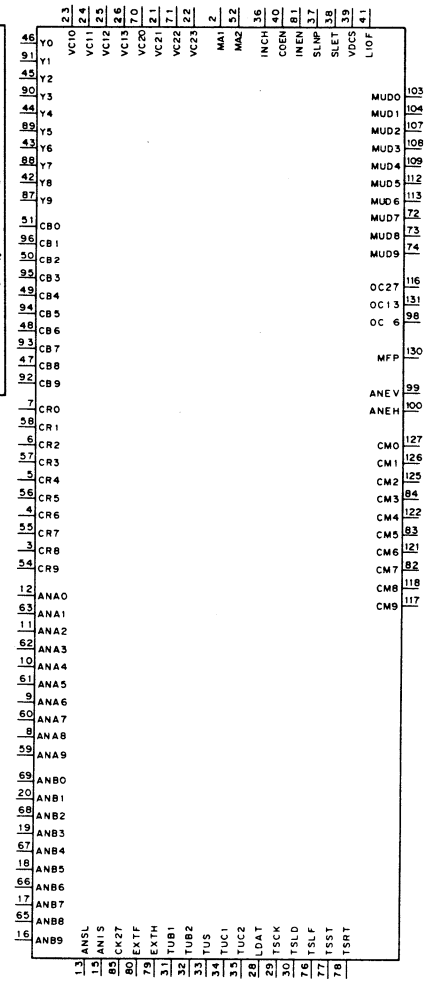

INPUT

ANA0 – ANA9	; ANCILLARY SIGNAL (13.5MHz 20 BITS OR 27MHz 10 BITS)
ANB0 – ANB9	; ANCILLARY SIGNAL (13.5MHz 20 BITS)
ANIS	; ANC SIGNAL INSERT SELECTOR
ANSL	; ANC 10 BITS/20 BITS SIGNAL SELECTOR
CB0 – CB9	; C_B OR $C_B \cdot C_R$ MPX SIGNAL
CK27	; 27MHz CLOCK
COEN	; CONNECT WITH "+5V"
CR0 – CR9	; C_R OR $C_B \cdot C_R$ MPX SIGNAL (INPUT CHECK)
EXTF	; REFERENCE F
EXTH	; REFERENCE H
INEH	; CONNECT WITH "+5V"
INCH	; CONNECT WITH "+5V"
TUB1, TUB2	; CONNECT WITH "GND"
TUS, TUC1, TUC2	; CONNECT WITH "GND"
LDAT, TSCK, TSLD	; FOR TEST
LIOF	; DATA LIMIT SELECTOR (ON/OFF)
MA1, MA2	; ROUND MODE SELECTOR (ROUND, RAISE, CUT OFF, THROUGH)
SLET	; DATA SELECTOR (8 BITS OR 10 BITS)
SLNP	; 525 LINE/625 LINE SELECTOR
TSLF, TSST, TSRT	; FOR TEST
VC10 – VC13	; 525/60 (FIELD1) V BLANKING CONTROL
VC20 – VC23	; 525/60 (FIELD2) V BLANKING CONTROL
VDCS	; CHROMA SIGNAL SELECTOR ($C_B \cdot C_R$ MPX/C_B, C_R)
Y0 – Y9	; Y SIGNAL

OUTPUT

ANEH	; DATA INTERVAL SIGNAL ("HIGH" AT BETWEEN EAV AND SAV)
ANEV	; DATA VALID SIGNAL ("HIGH" AT THE DATA VALID PERIOD IN V BLK INTERVAL)
CM0 – CM9	; F, H COUNTER
MFP	; POSITION OF F COUNTER VALUE (MULTIPLEX SIGNAL)
MUD0 – MUD9	; MULTIPLEX DATA
OC6	; 6.75MHz CLOCK
OC13	; 13.5MHz CLOCK
OC27	; 27MHz CLOCK

V_{DD} = + 5V

PIN NO.	I/O	SYMBOL	PIN NO.	I/O	SYMBOL	PIN NO.	I/O	SYMBOL	PIN NO.	I/O	SYMBOL
1	–	NC	34	I	TUC1	67	I	ANB4	100	O	ANEH
2	I	MA1	35	I	TUC2	68	I	ANB2	101	–	GND
3	I	CR8	36	I	INCH	69	I	ANB0	102	–	GND
4	I	CR6	37	I	SLNP	70	I	VC20	103	O	MUD0
5	I	CR4	38	I	SLET	71	I	VC22	104	O	MUD1
6	I	CR2	39	I	VDCS	72	O	MUD7	105	–	GND
7	I	CR0	40	I	COEN	73	O	MUD8	106	–	GND
8	I	ANA8	41	I	LIOF	74	O	MUD9	107	O	MUD2
9	I	ANA6	42	I	Y8	75	–	GND	108	O	MUD3
10	I	ANA4	43	I	Y6	76	I	TSLF	109	O	MUD4
11	I	ANA2	44	I	Y4	77	I	TSST	110	–	GND
12	I	ANA0	45	I	Y2	78	I	TSRT	111	–	GND
13	I	ANSL	46	I	Y0	79	I	EXTH	112	O	MUD5
14	–	NC	47	I	CB8	80	I	EXTF	113	O	MUD6
15	I	ANIS	48	I	CB6	81	I	INEH	114	–	V_{DD}
16	I	ANB9	49	I	CB4	82	I/O	CM7	115	–	GND
17	I	ANB7	50	I	CB2	83	I/O	CM5	116	O	OC27
18	I	ANB5	51	I	CB0	84	I/O	CM3	117	I/O	CM9
19	I	ANB3	52	I	MA2	85	I	CK27	118	I/O	CM8
20	I	ANB1	53	–	GND	86	–	V_{DD}	119	–	GND
21	I	VC21	54	I	CR9	87	I	Y9	120	–	GND
22	I	VC23	55	I	CR7	88	I	Y7	121	I/O	CM6
23	I	VC10	56	I	CR5	89	I	Y5	122	I/O	CM4
24	I	VC11	57	I	CR3	90	I	Y3	123	–	GND
25	I	VC12	58	I	CR1	91	I	Y1	124	–	GND
26	I	VC13	59	I	ANA9	92	I	CB9	125	I/O	CM2
27	–	NC	60	I	ANA7	93	I	CB7	126	I/O	CM1
28	I	LDAT	61	I	ANA5	94	I	CB5	127	I/O	CM0
29	I	TSCK	62	I	ANA3	95	I	CB3	128	–	GND
30	I	TSLD	63	I	ANA1	96	I	CB1	129	–	GND
31	I	TUB1	64	–	V_{DD}	97	–	GND	130	O	MFP
32	I	TUB2	65	I	ANB8	98	O	OC6	131	O	OC13
33	I	TUS	66	I	ANB6	99	O	ANEV	132	–	V_{DD}

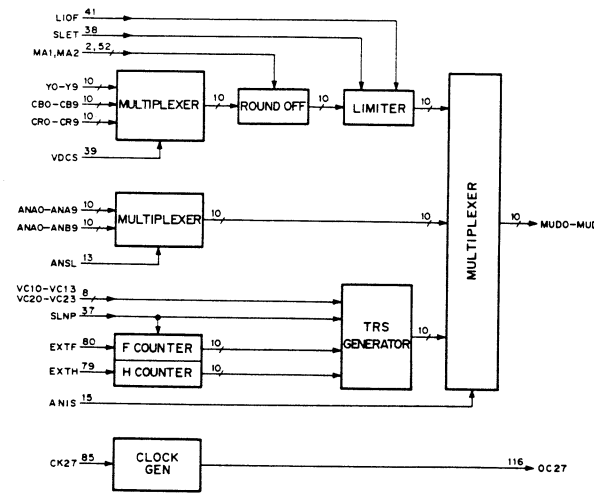

CXD8069BG (SONY)
CXD8069G (SONY)
C-MOS 4 : 2 : 2 COMPONENT DIGITAL VIDEO
PARALLEL INTERFACE DECODER
– BOTTOM VIEW –

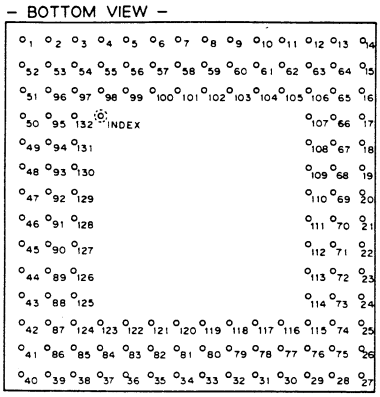

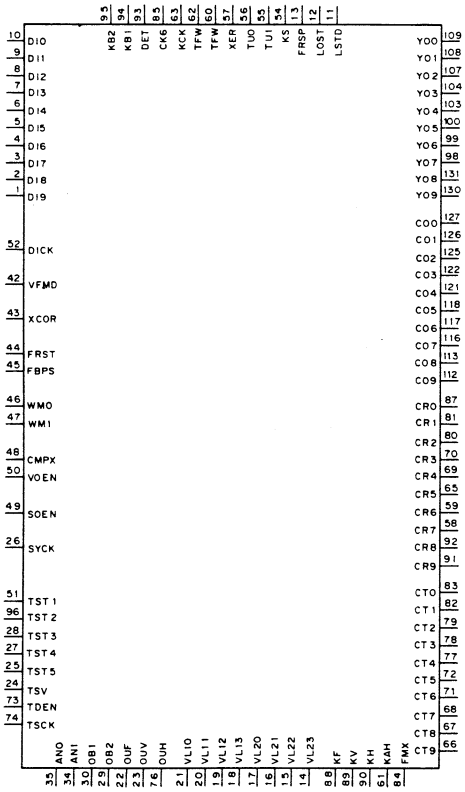

INPUT

CMPX	; CHROMA MPX MODE SELECTOR
DI0~DI9	; Y, CB・CR MPX SIGNAL
DICK	; DATA CLOCK (27MHz)
FBPS	; FIFO BYPASS ON/OFF SELECTOR
FRST	; RD/WR POINTER (FIFO) RESET
SOEN	; OUTPUT ENABLE FOR OVF, OUV, OUH, AN1, AN0
SYCK	; SYSTEM CLOCK
TST1, TST2	; FOR TEST
TST3, TST4	; FOR TEST
TST5, TSCK	; FOR TEST
TSU, TDEN	; FOR TEST
VFMD	; FOR TEST
VOEN	; OUTPUT ENABLE FOR YO9~YO0, CO9~CO0, CR9~CR0
WM1, WMO	; ROUNDING MODE SELECTOR
XCOR	; CORRECTION ON/OFF SELECTOR (TRS-XY BYTE SIGNAL)

OUTPUT

AN1, AN0	; ANCILLARY DATA START TIMING
CK6	; 6.75MHz CLOCK
CO0~CO9	; CHROMA SIGNAL (CB・CR MPX OR CB)
CR0~CR9	; CHROMA SIGNAL (CR)
CT9~CT0	; F OR H COUNTER VALUE
DET	; TRS DETECTION PULSE
FFW	; FRAME FLYWHEEL STATUS
FMX	; CONDITION OF CT9~CT0 OUT SIG. "HIGH" AT H COUNTER VALUE "LOW" AT F COUNTER VALUE
FRSP	; MONITOR SIGNAL OF FIFD RESET
KAH	; H-PULSE (CORRESPONDING TO ANALOG PHASE)
KB1, KB2, KS	; NOT USED (MONITOR)
TU1, TU0	; NOT USED (MONITOR)
OB1, OB2	; NOT USED (MONITOR)
KCK	; 13.5MHz CLOCK
KF, FV, KH	; F-PULSE, V-PULSE, H-PULSE (BEFORE FIFO)
LOST	; CLOCK MISSING DETECTOR
LSTD	; LINE STANDARD STATUS (525 LINE/625 LINE)
OUF, OUV, OUH	; FRAME PULSE, V-PULSE, H-PULSE
TFW	; TRS FLYWHEEL STATUS
VL10~VL13	; 525 V-PULSE TRAILING LINE IN FIELD1
VL20~VL23	; 525 V-PULSE TRAILING LINE IN FIELD2
XER	; XY-BYTE ERROR CHECK
YO0~YO9	; Y SIGNAL

VDD = + 5V

PIN NO.	I/O	SYMBOL	PIN NO.	I/O	SYMBOL	PIN NO.	I/O	SYMBOL	PIN NO.	I/O	SYMBOL
1	I	DI9	34	O	AN1	67	I/O	CT8	100	O	YO5
2	I	DI8	35	O	AN0	68	I/O	CT7	101	–	GND
3	I	DI7	36	–	NC	69	O	CR4	102	–	GND
4	I	DI6	37	–	NC	70	O	CR3	103	O	YO4
5	I	DI5	38	–	NC	71	I/O	CT6	104	O	YO3
6	I	DI4	39	–	NC	72	I/O	CT5	105	–	GND
7	I	DI3	40	–	NC	73	I	TDEN	106	–	GND
8	I	DI2	41	–	NC	74	I	TSCK	107	O	YO2
9	I	DI1	42	I	VFMD	75	–	GND	108	O	YO1
10	I	DI0	43	I	XCOR	76	O	OUH	109	O	YO0
11	O	LSTD	44	I	FRST	77	I/O	CT4	110	–	GND
12	O	LOST	45	I	FBPS	78	I/O	CT3	111	–	GND
13	O	FRSP	46	I	WM0	79	I/O	CT2	112	O	CO9
14	O	VL23	47	I	WM1	80	O	CR2	113	O	CO8
15	O	VL22	48	I	CMPX	81	O	CR1	114	–	VDD
16	O	VL21	49	I	SOEN	82	I/O	CT1	115	–	GND
17	O	VL20	50	I	VOEN	83	I/O	CT0	116	O	CO7
18	O	VL13	51	I	TST1	84	I/O	FMX	117	O	CO6
19	O	VL12	52	I	DICK	85	O	CK6	118	O	CO5
20	O	VL11	53	–	GND	86	–	VDD	119	–	GND
21	O	VL10	54	O	KS	87	O	CR0	120	–	GND
22	O	OUF	55	O	TU1	88	O	KF	121	O	CO4
23	O	OUV	56	O	TU0	89	O	KV	122	O	CO3
24	I	TSV	57	O	XER	90	O	KH	123	–	GND
25	I	TST5	58	O	CR7	91	O	CR9	124	–	GND
26	I	SYCK	59	O	CR6	92	O	CR8	125	O	CO2
27	I	TST4	60	O	TFW	93	O	DET	126	O	CO1
28	I	TST3	61	O	KAH	94	O	KB1	127	O	CO0
29	O	OB2	62	I/O	FFW	95	O	KB2	128	–	GND
30	O	OB1	63	O	KCK	96	I	TST2	129	–	GND
31	–	NC	64	–	VDD	97	–	GND	130	O	YO9
32	–	NC	65	O	CR5	98	O	YO7	131	O	YO8
33	–	NC	66	I/O	CT9	99	O	YO6	132	–	VDD

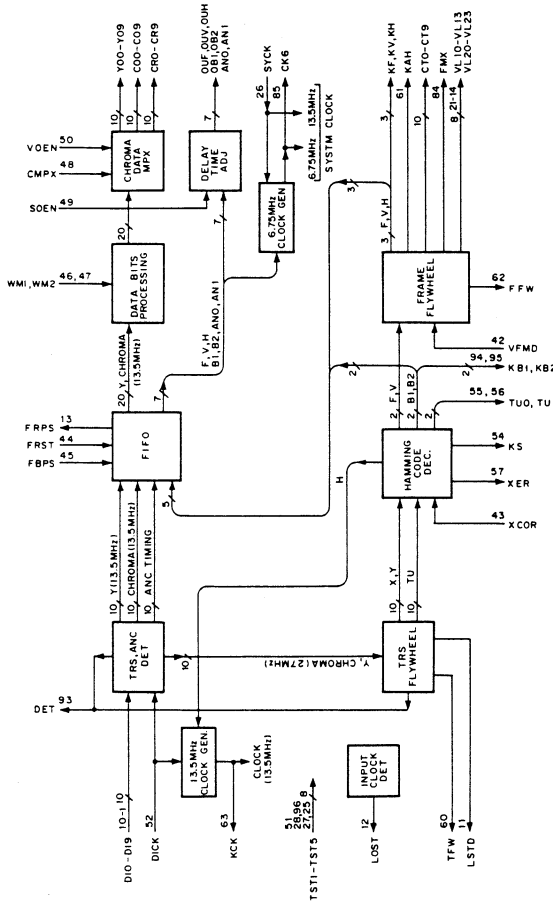

CXD8093Q (SONY) FLAT PACKAGE

C-MOS GATE ARRAY

– TOP VIEW –

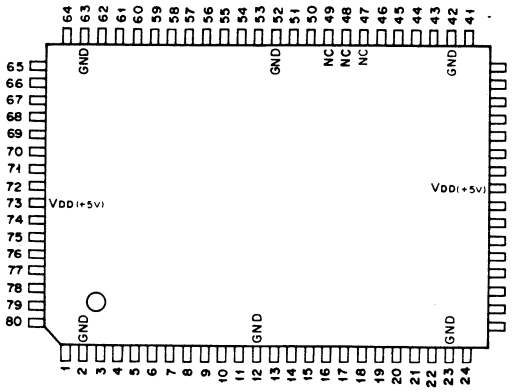

(VDD = + 5V)

PIN No.	I/O	SIGNAL	PIN No.	I/O	SIGNAL	PIN No.	I/O	SIGNAL	PIN No.	I/O	SIGNAL
1	O	W33	21	O	W21	41	O	W14	61	O	W01
2	–	GND	22	O	W20	42	–	GND	62	O	W00
3	O	W32	23	–	GND	43	O	W13	63	–	GND
4	O	W31	24	O	SDO	44	O	W12	64	I	R23
5	O	W30	25	O	SEN	45	O	W11	65	I	R22
6	I	R37	26	I	ID7	46	O	W10	66	I	R21
7	I	R36	27	I	ID6	47	–	NC	67	I	R20
8	I	R35	28	I	ID5	48	–	NC	68	I	R17
9	I	R34	29	I	ID4	49	–	NC	69	I	R16
10	O	W27	30	I	ID3	50	O	W07	70	I	R15
11	O	W26	31	I	ID2	51	O	W06	71	I	R14
12	–	GND	32	I	ID1	52	–	GND	72	I	R13
13	O	W25	33	–	VDD	53	O	W05	73	–	VDD
14	O	W24	34	I	ID0	54	O	W04	74	I	R12
15	O	W23	35	I	SCK	55	O	W03	75	I	R11
16	O	W22	36	I	SDI	56	O	W02	76	I	R10
17	I	R33	37	I	SHD	57	I	R27	77	O	W37
18	I	R32	38	O	W17	58	I	R26	78	O	W36
19	I	R31	39	O	W16	59	I	R25	79	O	W35
20	I	R30	40	O	W15	60	I	R24	80	O	W34

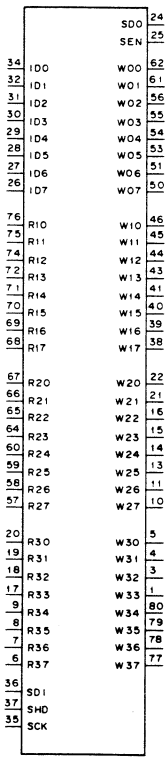

INPUT

ID0 – 7 : SERIAL INTERFACE ID
R10 – 17 : READ PORT 1
R20 – 27 : READ PORT 2
R30 – 37 : READ PORT 3
SCK : SERIAL CLOCK
SDI : SERIAL DATA INPUT
SHD : SERIAL DATA TOP

OUTPUT

SDO : SERIAL DATA OUTPUT
SEN : SERIAL DATA OUTPUT ENABLE
W00 – 07: WRITE PORT 0
W10 – 17: WRITE PORT 1
W20 – 27: WRITE PORT 2
W30 – 37: WRITE PORT 3

CXD8094Q (SONY) FLAT PACKAGE

C-MOS GATE ARRAY

– TOP VIEW –

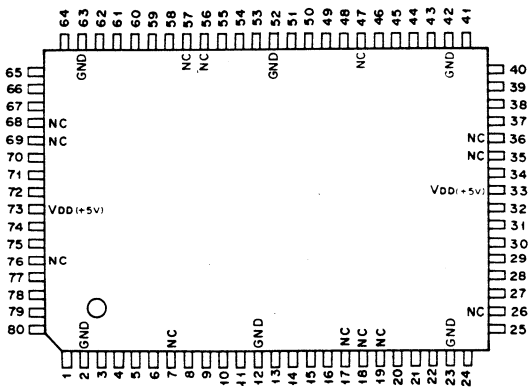

(VDD = + 5V)

PIN No.	I/O	SIGNAL	PIN No.	I/O	SIGNAL	PIN No.	I/O	SIGNAL	PIN No.	I/O	SIGNAL
1	O	MOE	21	I	SYCS	41	I/O	SYD4	61	I/O	MD5
2	–	GND	22	I	SYOE	42	–	GND	62	I/O	MD4
3	O	MAB	23	–	GND	43	I/O	SYD3	63	–	GND
4	O	MAA	24	O	SDO	44	I/O	SYD2	64	I/O	MD3
5	O	MA9	25	O	SHD	45	I/O	SYD1	65	I/O	MD2
6	O	MA8	26	–	NC	46	I/O	SYD0	66	I/O	MD1
7	–	NC	27	I	DTR	47	–	NC	67	I/O	MD0
8	O	MA7	28	I	RSFT	48	I	SYAB	68	–	NC
9	O	MA6	29	I	SDI	49	I	SYAA	69	–	NC
10	O	MA5	30	I	SCK	50	I	SYA9	70	I	SYA4
11	O	MA4	31	I	EXE	51	I	SYA8	71	I	SYA3
12	–	GND	32	I	DMSB	52	–	GND	72	I	SYA2
13	O	MA3	33	–	VDD	53	I	SYA7	73	–	VDD
14	O	MA2	34	I	WID8	54	I	SYA6	74	I	SYA1
15	O	MA1	35	–	NC	55	I	SYA5	75	I	SYA0
16	O	MA0	36	–	NC	56	–	NC	76	–	NC
17	–	NC	37	I/O	SYD8	57	–	NC	77	O	ERR
18	–	NC	38	I/O	SYD7	58	I/O	MD8	78	O	BUSY
19	–	NC	39	I/O	SYD6	59	I/O	MD7	79	O	MWE
20	I	SYWE	40	I/O	SYD5	60	I/O	MD6	80	O	MCS

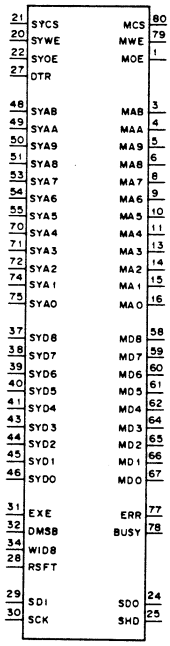

INPUT

DMSB : DATA MSB
DTR : DATA DIRECTION
EXE : EXECUTE
RSFT : READ SHIFT
SCK : SERIAL CLOCK
SDI : SERIAL DATA INPUT
SYA0 – SYA9 : SYSTEM ADDRESS
SYAA : SYSTEM ADDRESS
SYAB : SYSTEM ADDRESS
SYCS : SYSTEM CHIP SELECT
SYOE : SYSTEM OUTPUT ENABLE
SYWE : SYSTEM WRITE ENABLE
WID8 : DATA WIDTH SELECT

OUTPUT

BUSY : TRANSMISSION BUSY
ERR : TRANSMISSION ERROR
MA0 – MA9 : MEMORY ADDRESS
MAA : MEMORY ADDRESS
MAB : MEMORY ADDRESS
MCS : MEMORY CHIP SELECT
MOE : MEMORY OUTPUT ENABLE
MWE : MEMORY WRITE ENABLE
SDO : SERIAL DATA OUTPUT
SHD : SERIAL DATA TOP

INPUT/OUTPUT

MD0 – MD8 : MEMORY DATA
SYD0 – SYD8 : SYSTEM DATA

CXD8099G (SONY)

C-MOS GATE ARRAY
– BOTTOM VIEW –

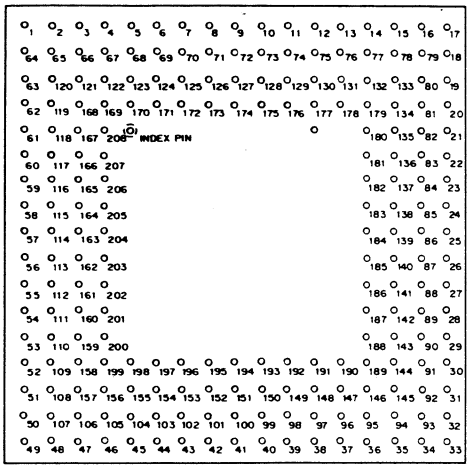

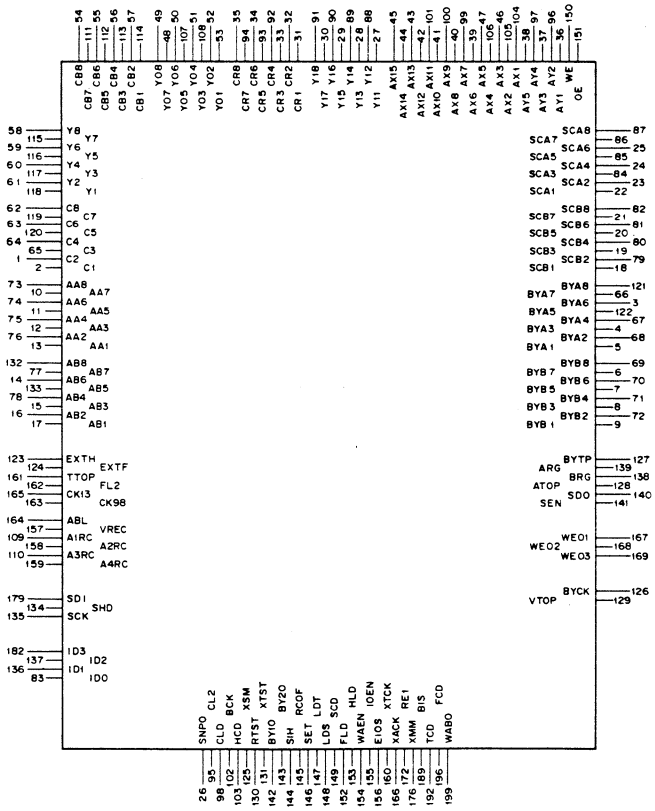

(VDD = + 5V)

PIN No.	I/O	SIGNAL	PIN No.	I/O	SIGNAL	PIN No.	I/O	SIGNAL	PIN No.	I/O	SIGNAL	PIN No.	I/O	SIGNAL
1	I	C2	43	O	AX13	85	O	SCA5	127	O	BYTP	169	O	WEO3
2	I	C1	44	O	AX14	86	O	SCA7	128	O	ATOP	170	–	GND
3	O	BYA6	45	O	AX15	87	O	SCA8	129	O	VTOP	171	–	VDD
4	O	BYA3	46	O	AX3	88	I/O	Y12	130	I	RTST	172	I	RE1
5	O	BYA1	47	O	AX5	89	I/O	Y14	131	I	XTST	173	–	GND
6	O	BYB7	48	I/O	Y07	90	I/O	Y16	132	I	AB8	174	–	GND
7	O	BYB5	49	I/O	Y08	91	I/O	Y18	133	I	AB5	175	–	VDD
8	O	BYB3	50	I/O	Y06	92	I/O	CR4	134	I	SHD	176	I	XMM
9	O	BYB1	51	I/O	Y04	93	I/O	CR5	135	I	SCK	177	–	GND
10	I	AA7	52	I/O	Y02	94	I/O	CR7	136	I	ID1	178	–	VDD
11	I	AA5	53	I/O	Y01	95	I	CL2	137	I	ID2	179	I	SDI
12	I	AA3	54	I/O	CB8	96	O	AY2	138	O	BRG	180	–	GND
13	I	AA1	55	I/O	CB6	97	O	AY4	139	O	ARG	181	–	VDD
14	I	AB6	56	I/O	CB4	98	I	CLD	140	O	SDO	182	I	ID3
15	I	AB3	57	I/O	CB2	99	O	AX7	141	O	SEN	183	–	GND
16	I	AB2	58	I	Y8	100	O	AX9	142	I	BY1O	184	–	GND
17	I	AB1	59	I	Y6	101	O	AX11	143	I	BY2O	185	–	VDD
18	O	SCB1	60	I	Y4	102	I	BCK	144	I	SIH	186	–	GND
19	O	SCB3	61	I	Y2	103	I	HCD	145	I	RCOF	187	–	GND
20	O	SCB5	62	I	C8	104	O	AX1	146	I	SET	188	–	VDD
21	O	SCB7	63	I	C6	105	O	AX2	147	I	LDT	189	I	BIS
22	O	SCA1	64	I	C4	106	O	AX4	148	I	LDS	190	–	GND
23	O	SCA2	65	I	C3	107	I/O	Y05	149	I	SCD	191	–	VDD
24	O	SCA4	66	O	BYA7	108	I/O	Y03	150	O	WE	192	I	TCD
25	O	SCA6	67	O	BYA4	109	I	A1RC	151	O	OE	193	–	GND
26	I	SNPO	68	O	BYA2	110	I	A3RC	152	I	FLD	194	–	GND
27	I/O	Y11	69	O	BYB8	111	I/O	CB7	153	I	HLD	195	–	VDD
28	I/O	Y13	70	O	BYB6	112	I/O	CB5	154	I	WAEN	196	I	FCD
29	I/O	Y15	71	O	BYB4	113	I/O	CB3	155	I	IOEN	197	–	GND
30	I/O	Y17	72	O	BYB2	114	I/O	CB1	156	I	EIOS	198	–	VDD
31	I/O	CR1	73	I	AA8	115	I	Y7	157	I	VREC	199	I	WABO
32	I/O	CR2	74	I	AA6	116	I	Y5	158	I	A2RC	200	–	GND
33	I/O	CR3	75	I	AA4	117	I	Y3	159	I	A4RC	201	–	VDD
34	I/O	CR6	76	I	AA2	118	I	Y1	160	I	XTCK	202	–	NC
35	I/O	CR8	77	I	AB7	119	I	C7	161	I	TTOP	203	–	GND
36	O	AY1	78	I	AB4	120	I	C5	162	I	FL2	204	–	GND
37	O	AY3	79	O	SCB2	121	O	BYA8	163	I	CK98	205	–	VDD
38	O	AY5	80	O	SCB4	122	O	BYA5	164	I	ABL	206	–	GND
39	O	AX6	81	O	SCB6	123	I	EXTH	165	I	CK13	207	–	GND
40	O	AX8	82	O	SCB8	124	I	EXTF	166	I	XACK	208	–	VDD
41	O	AX10	83	I	ID0	125	I	XSM	167	O	WEO1			
42	O	AX12	84	O	SCA3	126	O	BYCK	168	O	WEO2			

INPUT

AA1 – AA8	; A (C) TRACK AUDIO DATA
AB1 – AB8	; B (D) TRACK AUDIO DATA
ABL	; A, B TRACK (L) /C, D TRACK (H) SELECT
A1RC – A4RC	; AUDIO REC GATE (ACTIVE "L") 1CH~4CH
BCK, BIS, BY1O, BY2O	; TEST PINS
C1 – C8	; CHROMINANCE SIGNAL
CK13	; CLOCK (13.5MHz)
CK98	; CLOCK (9.837MHz)
CL2, CLD, EIOS	; TEST PINS
EXTF	; FRAME SIGNAL
EXTH	; H SYNC
FCD, FL2, FLD, HCD, HLD	; TEST PINS
ID0 – ID3	; IC ID (ID3 (MSB) ~ID0 (LSB))
IOEN, LDS, LDT, RCOF, RE1, RTST, SCD	; TEST PINS
SCK	; CPU SERIAL INTERFACE CLOCK
SDI	; CPU SERIAL INTERFACE DATA (CPU→IC)
SET	; TEST PIN
SHD	; CPU SERIAL INTERFACE ADDRESS HEADER PULSE
SIH, SNPO, TCD	; TEST PINS
TTOP	; A (C) TRACK TOP SIGNAL
VREC	; VIDEO REC GATE (ACTIVE "L")
WABO, WAEN, XACK, XMM, XSM, XTCK, XTST	; TEST PINS
Y1 – Y8	; LUMINANCE SIGNAL

OUTPUT

ARG	; A (C) TRACK REC GATE
ATOP	; AUDIO SHUFFLING MEMORY READ START
AX1 – AX15	; SHUFFLING MEMORY (CB, Y0, CR) ADDRESS
AY1 – AY5	; SHUFFLING MEMORY (Y1) ADDRESS
BRG	; B (D) TRACK REC GATE
BYA1 – BYA8	; A (C) TRACK BYPASS DATA
BYB1 – BYB8	; B (D) TRACK BYPASS DATA
BYCK	; BYPASS CLOCK
BYTP	; BYPASS DATA TOP
OE	; SHUFFLING MEMORY OUTPUT ENABLE
SCA1 – SCA8	; A (C) TRACK REC DATA
SCB1 – SCB8	; B (D) TRACK REC DATA
SDO	; CPU SERIAL INTERFACE DATA (IC→CPU)
SEN	; CPU SERIAL INTERFACE DATA (SDO) ENABLE
VTOP	; VIDEO TOP SIGNAL
WE	; SHUFFLING MEMORY WRITE ENABLE
WEO1 – WEO3	; MONITOR PIN

INPUT/OUTPUT

CB1 – CB8	; SHUFFLING DATA (B-Y)
CR1 – CR8	; SHUFFLING DATA (R-Y)
Y01 – Y08	; SHUFFLING DATA (Y0)
Y11 – Y18	; SHUFFLING DATA (Y1)

CXD8123G (SONY)

C-MOS GATE ARRAY
– TOP VIEW –

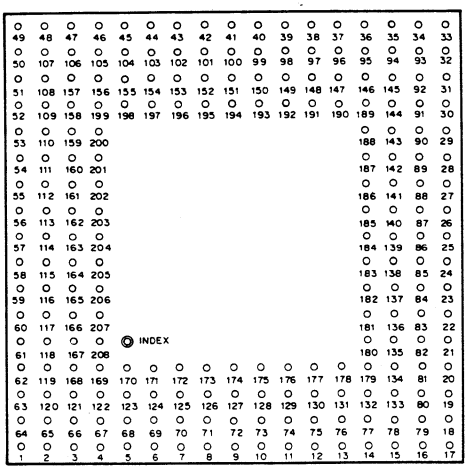

PIN No.	I/O	SIGNAL	PIN No.	I/O	SIGNAL	PIN No.	I/O	SIGNAL	PIN No.	I/O	SIGNAL
1	I	DA7	53	O	MFO0	105	I/O	MD37	157	I	MFI0
2	I	DA6	54	–	N.C	106	I/O	MD36	158	O	RDF1
3	I	DA5	55	I	CK13	107	I/O	MD35	159	O	RDF0
4	I	DA4	56	O	MCS1	108	I/O	MD34	160	I	XTCK
5	I	DA3	57	O	MWE	109	I/O	MD33	161	I	XSGE
6	I	DA2	58	O	MOE	110	I/O	MD32	162	O	MCS0
7	I	DA1	59	O	AOE	111	I/O	MD31	163	O	BOE
8	I	DA0	60	O	AWE	112	I/O	MD30	164	O	BWE
9	I	BSYC	61	I	CKB	113	O	MA17	165	I	SCK
10	I	DB7	62	O	EWE	114	O	MA16	166	I	XACK
11	I	DB6	63	I	CKA	115	O	MA15	167	I	SID3
12	I	DB5	64	I	ASYC	116	O	MA14	168	I	SID2
13	I	DB4	65	O	MA9	117	O	MA13	169	I	SID0
14	I	DB3	66	O	MA8	118	O	MA12	170	–	GND
15	I	DB2	67	O	MA7	119	O	MA11	171	–	VDD (+5V)
16	I	DB1	68	O	MA6	120	O	MA10	172	I	XMM
17	I	DB0	69	O	MA5	121	I	SID1	173	–	GND
18	I	BYP7	70	O	MA4	122	O	SERO	174	–	GND
19	I	BYP6	71	O	MA3	123	O	SEN	175	–	VDD (+5V)
20	I	BYP5	72	O	MA2	124	I	SERI	176	O	GRYF
21	I	BYP4	73	O	MA1	125	I	XSM	177	–	GND
22	I	BYP3	74	O	MA0	126	I	SHD	178	–	VDD (+5V)
23	I	BYP2	75	O	MB4	127	I	XMTH	179	I	TSDC
24	I	BYP1	76	O	MB3	128	I	XODH	180	–	GND
25	I	BYP0	77	O	MB2	129	O	AFLD	181	–	VDD (+5V)
26	I	SDI	78	O	MB1	130	O	BFLD	182	O	WFN0
27	O	WFO1	79	I	BYSY	131	I	XTST	183	–	GND
28	O	WFO0	80	I/O	MD07	132	I	XTPL	184	–	GND
29	O	WFA2	81	I/O	MD06	133	O	MBO	185	–	VDD (+5V)
30	O	WFA1	82	I/O	MD05	134	I	TSOC	186	–	GND
31	O	WFA0	83	I/O	MD04	135	I	BYCK	187	–	GND
32	I	RSYC	84	I/O	MD03	136	O	WFN2	188	–	VDD (+5V)
33	O	WFB2	85	I/O	MD02	137	O	WFN1	189	I	XT2W
34	O	WFB1	86	I/O	MD01	138	O	WNO	190	–	GND
35	O	WFB0	87	I/O	MD00	139	I	CKR	191	–	VDD (+5V)
36	–	N.C	88	I/O	MD17	140	O	WFO2	192	I	XECT
37	O	DO7	89	I/O	MD16	141	I	XTWE	193	–	GND
38	O	DO6	90	I/O	MD15	142	I	MCK	194	–	GND
39	O	DO5	91	I/O	MD14	143	I	XWSH	195	–	VDD (+5V)
40	O	DO4	92	I/O	MD13	144	I	XSHT	196	I	XSOL
41	O	DO3	93	I/O	MD12	145	I	TROE	197	–	GND
42	O	DO2	94	I/O	MD11	146	I	TRAE	198	–	VDD (+5V)
43	O	DO1	95	I/O	MD10	147	I	XTOD	199	O	RDF2
44	O	DO0	96	I/O	MD27	148	I	XPH1	200	–	GND
45	O	FLO	97	I/O	MD26	149	I	XPH2	201	–	VDD (+5V)
46	O	XDOE	98	I/O	MD25	150	O	DWEO	202	I	XTFL
47	–	N.C	99	I/O	MD24	151	I	XTSF	203	–	GND
48	I	CH1	100	I/O	MD23	152	I	XTMT	204	–	GND
49	I	CH0	101	I/O	MD22	153	I	XODL	205	–	VDD (+5V)
50	O	MFO3	102	I	BCK	154	I	MFI3	206	–	GND
51	O	MFO2	103	I/O	MD21	155	I	MFI2	207	–	GND
52	O	MFO1	104	I/O	MD20	156	I	MFI1	208	–	VDD (+5V)

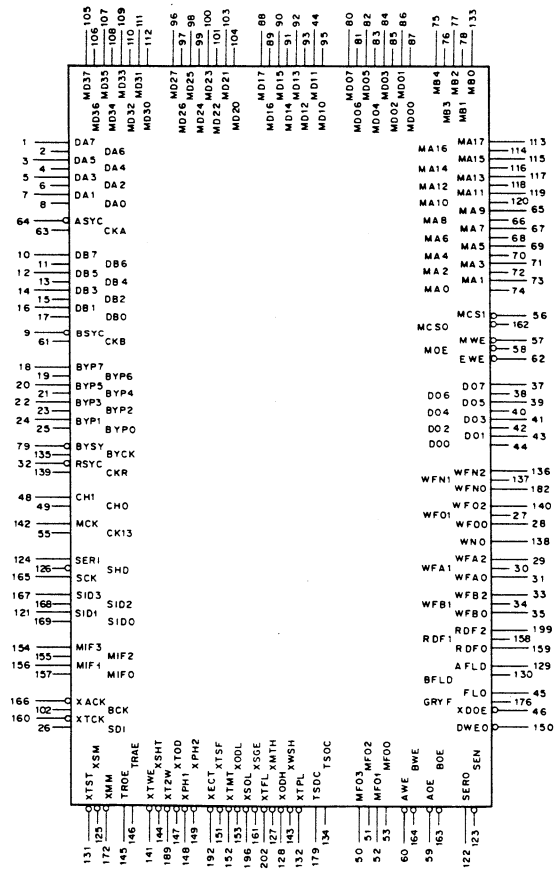

INPUT

ASYC ; DATA TOP PULSE INPUT-A
BCK ; SCAN TEST CLOCK
BSYC ; DATA TOP PULSE INPUT-B
BYP0 – BYP7 ; BYPASS DATA INPUT
BYCK ; BYPASS CLOCK INPUT
BYSY ; BYPASS DATA TOP PULSE INPUT
CH0, CH1 ; CHANNEL ID
CK13 ; 13.5 MHz CLOCK INPUT
CKA ; PB CLOCK INPUT-A
CKB ; PB CLOCK INPUT-B
CKR ; 6.75 MHz CLOCK INPUT
DA0 – DA7 ; DATA INPUT-A
DB0 – DB7 ; DATA INPUT-B
MCK ; MEMORY CONTROL CLOCK
MFI0 – MFI1 ; FLAG MEMORY READ DATA
RSYC ; READ START PULSE
SCK ; SERIAL CONTROL CLOCK
SDI ; SERIAL DATA INPUT
SERI ; SERIAL CONTROL DATA INPUT
SHD ; SERIAL CONTROL DATA HEADER
SID0 – SID3 ; SERIAL CONTROL ID
TRAE, TROE, TSDC, TSOC; TEST CONTROL
XACK ; SCAN TEST CLOCK
XECT ; TEST CONTROL
XMM ; SCAN TEST CONTROL
XMTH, XODH, XODL ; TEST CONTROL
XPH1, XPH2, XSGE, XSHT; TEST CONTROL
XSM ; SCAN TEST CONTROL
XSOL, XT2W ; TEST CONTROL
XTCK ; SCAN TEST CLOCK
XTFL, XTMT, XTOD ; TEST CONTROL
XTPL, XTSF ; TEST CONTROL
XTST ; SCAN TEST CONTROL
XTWE, XWSH ; TEST CONTROL

OUTPUT

AFLD ; A-INPUT FIELD ID LSB
AOE ; FLAG MEMORY BANK-B OUTPUT ENABLE
AWE ; FLAG MEMORY BANK-A WRITE ENABLE
BFLD ; B-INPUT FIELD ID LSB
BOE ; FLAG MEMORY BANK-B OUTPUT ENABLE
BWE ; FLAG MEMORY BANK-B WRITE ENABLE
DO0 – DO7 ; DATA OUTPUTS
DWE0 ; INTERNAL RAM WRITE ENABLE
EWE ; EARLY WRITE ENABLE
FLO ; FLAG OUTPUT
GRYF ; GRAY FLAG OUT
MA0 – MA17 ; EXTERNAL MEMORY ADDRESS
MB0 – MB4 ; EXTERNAL MEMORY ADDRESS
MCS0, MCS1 ; DATA MEMORY CHIP SELECT
MFO0 – MFO3 ; FLAG MEMORY WRITE DATA
MOE ; DATA MEMORY OUTPUT ENABLE
MWE ; DATA MEMORY WRITE ENABLE
RDF0 – RDF2 ; READ FIELD ID
SEN ; SERIAL STATUS DATA OUTPUT ENABLE
SERO ; SERIAL STATUS DATA OUTPUT
WFA0 – WFA2 ; A-INPUT WRITE FIELD ID
WFB0 – WFB2 ; B-INPUT WRITE FIELD ID
WFN0 – WFN2 ; NEW WRITE FIELD ID
WF00 – WF02 ; OLD WRITE FIELD ID
WNO ; WRITE FIELD NEW/OLD
XDOE ; DATA OUTPUT ENABLE

INPUT/OUTPUT

MD00 – MD07 ; EXTERNAL MEMORY WRITE
MD10 – MD17 ; EXTERNAL MEMORY WRITE
MD20 – MD27 ; EXTERNAL MEMORY WRITE
MD30 – MD37 ; EXTERNAL MEMORY WRITE

CXD8124G (SONY)

C-MOS GATE ARRAY
– BOTTOM VIEW –

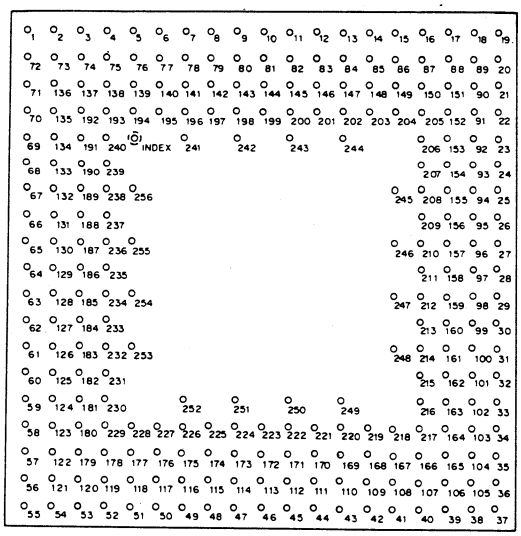

INPUT

ABY0 – ABY7; A-CH BYPASS DATA INPUTS
AD0 – AD7 ; A-CH DATA INPUTS
AFI ; A-CH FLAG INPUT
BBY0 – BBY7 ; B-CH BYPASS DATA INPUTS
BCK ; TEST CLOCK
BD0 – BD7 ; B-CH DATA INPUTS
BFI ; B-CH FLAG INPUT
CBY0 – CBY7 ; B-CH BYPASS DATA INPUTS
CD0 – CD7 ; C-CH DATA INPUTS
CFI ; C-CH FLAG INPUT
CFIA ; ANCILLARY CHROMA FLAG INPUT
CFIV ; VIDEO CHROMA FLAG INPUT
CIA0 – CIA7 ; ANCILLARY CHROMA DATA INPUTS
CIV0 – CIV7 ; VIDEO CHROMA DATA INPUTS
CK ; CLOCK
DBY0 – DBY7; D-CH BYPASS DATA INPUTS
DD0 – DD7 ; D-CH DATA INPUTS
DECF ; DECODER FRAME
DFI ; D-CH FLAG INPUT
EE ; E/E MODE
EEC0 – EEC7 ; E/E CHROMA DATA INPUTS
EEY0 – EEY7 ; E/E LUMA DATA INPUTS
EXMP ; EXTERNAL DE-MAP TIMING
REFF ; REFERENCE FRAME
SCK ; SERIAL CLOCK
SDI ; TEST INPUT
SERI ; SERIAL DATA INPUT
SHD ; SERIAL DATA TOP
SID0 – SID3 ; SERIAL INTERFACE ID
XACK ; TEST CLOCK
XFEN ; TEST CONTROL
XHDT ; TEST CONTROL
XMPC ; DE-MAP TIMING SELECT
XRHD ; HEAD DE-INTERLEAVE RESET
XSMC ; TEST CONTROL
XSRS ; SIGNATURE ANALYZER RESET
XTCK ; TEST CLOCK
XTST ; TEST CONTROL
XTRS ; TIMING GENERATOR RESET
YFIA ; ANCILLARY LUMA FLAG INPUT
YFIV ; VIDEO LUMA FLAG INPUT
YIA0 – YIA7 ; ANCILLARY LUMA DATA INPUTS
YIV0 – YIV7 ; VIDEO LUMA DATA INPUTS

OUTPUT

ANC ; ANCILLARY TIMING OUTPUT
ANC1, 2 ; ANCILLARY TIMING FIELD 1, 2
BLK ; BLANKING TIMING
CBCR ; BLANKING CB/CR SELECT
CFO0, CFO1 ; CHROMA FLAG OUTPUT, DELAYED CHROMA FLAG OUTPUT
CO00 – CO07 ; CHROMA DATA OUTPUTS
CO10 – CO17 ; CHROMA DELAYED DATA OUTPUTS
DMAP ; DE-MAP TIMING
HBLK ; H-BLANKING TIMING
SDO ; TEST DATA OUTPUT
SEN ; SERIAL DATA OUTPUT ENABLE
SERO ; SERIAL DATA OUTPUT
SPDM ; MONITOR OUTPUT SYNC PHASE CONTROL (1CK)
SPDO ; PROGRAM OUTPUT SYNC PHASE CONTROL (1CK)
STD ; 525/625
VBK1, VBK2 ; V BLANKING TIMING FIELD 1, 2
YO00 – YO07 ; LUMA DATA OUTPUTS
YO10 – YO17 ; LUMA DELAYED DATA OUTPUTS
YFO0, YFO1 ; LUMA FLAG OUTPUT, DELAYED FLAG OUTPUTS
XRI1, XRI2 ; INPUT CHECK DELAY CONTROL 1, 2
XFE2 ; E/E DELAY CONTROL-2'ND STAGE RESET
XFER ; E/E DELAY CONTROL-1'ST STAGE READ RESET
XFEW ; E/E DELAY CONTROL-1'ST STAGE WRITE RESET
XFRA ; ANCILLARY DELAY CONTROL
XFRM ; MONITOR OUTPUT SYNC PHASE CONTROL
XFRO ; PROGRAM OUTPUT SYNC PHASE CONTROL
XFRV ; VIDEO DELAY CONTROL
XLE ; TIMING DATA LATCH ENABLE PULSE

(VDD = + 5V)

PIN No.	I/O	SIGNAL	PIN No.	I/O	SIGNAL	PIN No.	I/O	SIGNAL	PIN No.	I/O	SIGNAL	PIN No.	I/O	SIGNAL
1	I	CD0	53	I	YIV7	105	I	CIA1	157	–	NC	209	I	XHDT
2	I	DD0	54	I	BD7	106	I	CIA2	158	I	SCK	210	I	XMPC
3	I	CBY7	55	I	AD7	107	I	CIA3	159	O	CFO0	211	–	GND
4	I	CBY6	56	I	AD6	108	I	CIA4	160	O	CO00	212	I	EXMP
5	I	CBY5	57	I	AD5	109	I	CIA5	161	–	NC	213	I	XFEN
6	I	CBY4	58	I	AD4	110	I	CIA6	162	O	CO01	214	–	GND
7	I	CBY3	59	I	AD3	111	I	CIA7	163	O	CO02	215	I	XSMC
8	I	CBY2	60	I	AD2	112	I	CIV0	164	O	YO03	216	–	GND
9	I	CBY1	61	I	AD1	113	I	CIV1	165	O	SERO	217	O	CO03
10	I	CBY0	62	I	AD0	114	I	CIV2	166	O	CO04	218	–	GND
11	–	NC	63	I	AFI	115	I	YFIV	167	O	YO04	219	O	CO05
12	I	EEY7	64	I	CK	116	I	CIV3	168	O	YO05	220	–	GND
13	I	EEY6	65	I	CD7	117	I	CIV4	169	–	NC	221	O	CO06
14	I	EEY5	66	I	XACK	118	I	CIV5	170	O	YO06	222	O	CO07
15	I	EEY4	67	I	CD6	119	I	CIV6	171	O	YO07	223	–	GND
16	I	EEY3	68	I	CD5	120	I	CIV7	172	I	CFIV	224	O	HBLK
17	I	EEY2	69	I	CD4	121	I	BD6	173	O	BLK	225	O	VBK2
18	I	EEY1	70	I	CD3	122	I	BD5	174	O	VBK1	226	–	GND
19	I	EEY0	71	I	CD2	123	I	BD4	175	O	ANC	227	O	ANC2
20	I	EEC0	72	I	CD1	124	I	BD3	176	O	ANC1	228	–	GND
21	I	SID3	73	I	DD1	125	I	BD2	177	O	DMAP	229	O	XLE
22	I	SID2	74	I	DBY7	126	I	BD1	178	I	ABY7	230	–	GND
23	I	SID1	75	I	DBY6	127	I	BD0	179	I	ABY6	231	I	XTCK
24	I	SID0	76	I	DBY5	128	I	BFI	180	I	ABY5	232	–	GND
25	I	SHD	77	I	DBY4	129	I	CFI	181	I	ABY4	233	O	CBCR
26	I	SERI	78	I	DBY3	130	I	DFI	182	I	ABY3	234	O	STD
27	I	EE	79	I	DBY2	131	I	DD7	183	I	ABY2	235	–	GND
28	I	XSRS	80	I	DBY1	132	I	DD6	184	I	ABY1	236	O	XFEW
29	I	SDI	81	I	DBY0	133	I	DD5	185	I	ABY0	237	O	XFER
30	I	XTRS	82	–	NC	134	I	DD4	186	I	BBY7	238	–	GND
31	I	REFF	83	I	EEC7	135	I	DD3	187	I	BBY6	239	O	SDO
32	I	DECF	84	I	EEC6	136	I	DD2	188	I	BBY5	240	–	GND
33	I	XRHD	85	I	EEC5	137	I	BBY0	189	I	BBY4	241	–	VDD
34	I	CFIA	86	I	EEC4	138	O	XRI1	190	I	BBY3	242	–	VDD
35	I	YFIA	87	I	EEC3	139	O	XRI2	191	I	BBY2	243	–	VDD
36	I	CIA0	88	I	EEC2	140	O	XFRA	192	I	BBY1	244	–	VDD
37	I	YIA0	89	I	EEC1	141	–	NC	193	O	XFE2	245	–	VDD
38	I	YIA1	90	–	NC	142	O	SPDO	194	–	GND	246	–	VDD
39	I	YIA2	91	–	NC	143	O	SPDM	195	O	XFRV	247	–	VDD
40	I	YIA3	92	O	YO12	144	–	NC	196	–	GND	248	–	VDD
41	I	YIA4	93	O	YO11	145	O	YO17	197	O	XFRO	249	–	VDD
42	I	YIA5	94	O	YO10	146	O	YO16	198	O	XFRM	250	–	VDD
43	I	YIA6	95	O	YFO1	147	O	CO15	199	–	GND	251	–	VDD
44	I	YIA7	96	–	NC	148	O	YO15	200	O	CO17	252	–	VDD
45	I	YIV0	97	–	NC	149	O	CO14	201	O	CO16	253	–	VDD
46	I	YIV1	98	O	YFO0	150	O	YO14	202	–	GND	254	–	VDD
47	I	YIV2	99	O	YO00	151	–	NC	203	I	XTST	255	–	VDD
48	I	BCK	100	–	NC	152	O	YO13	204	–	GND	256	–	VDD
49	I	YIV3	101	O	YO01	153	O	CO12	205	O	CO13			
50	I	YIV4	102	O	YO02	154	O	CO11	206	–	GND			
51	I	YIV5	103	–	NC	155	O	CO10	207	–	NC			
52	I	YIV6	104	O	SEN	156	O	CFO1	208	–	GND			

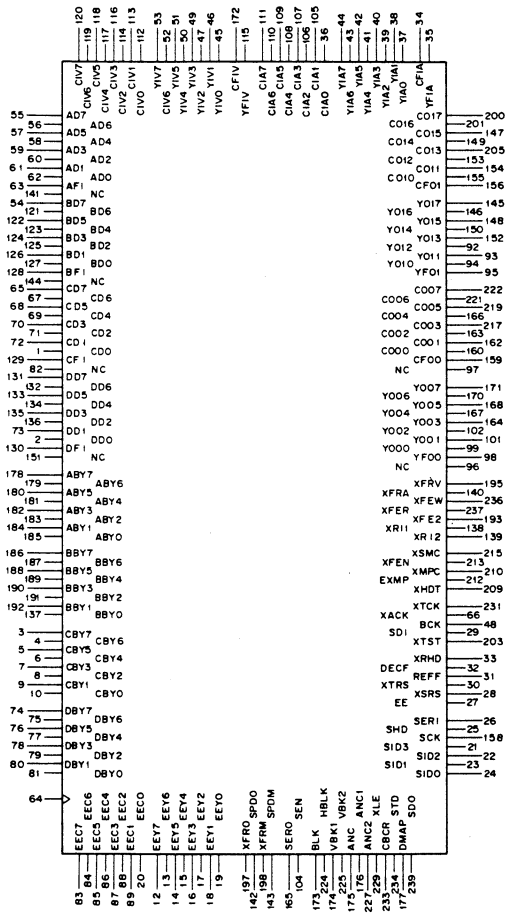

CXD8125Q (SONY)

C-MOS I/O PORT EXPANDER
– TOP VIEW –

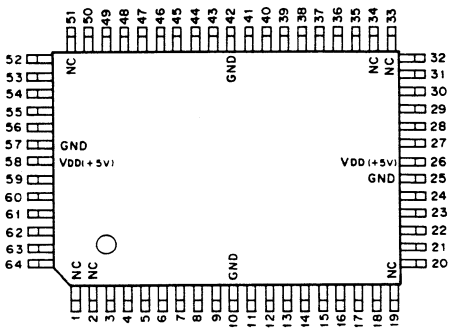

(VDD = + 5V)

PIN NO.	I/O	SIGNAL	PIN NO.	I/O	SIGNAL	PIN NO.	I/O	SIGNAL	PIN NO.	I/O	SIGNAL
1	–	NC	17	I/O	PC6	33	–	NC	49	I/O	PX0
2	–	NC	18	I/O	PC7	34	–	NC	50	I/O	PX1
3	I/O	PB1	19	–	NC	35	I/O	D3	51	–	NC
4	I/O	PB2	20	I/O	PD0	36	I/O	D4	52	I/O	PX2
5	I/O	PB3	21	I/O	PD1	37	I/O	D5	53	I/O	PX3
6	I/O	PB4	22	I/O	PD2	38	I/O	D6	54	I/O	PA0
7	I/O	PB5	23	I/O	PD3	39	I/O	D7	55	I/O	PA1
8	I/O	PB6	24	I/O	PD4	40	I	CLR	56	I/O	PA2
9	I/O	PB7	25	–	GND	41	I	RST	57	–	GND
10	–	GND	26	–	VDD	42	–	GND	58	–	VDD
11	I/O	PC0	27	I/O	PD5	43	I	WR	59	I/O	PA3
12	I/O	PC1	28	I/O	PD6	44	I	RD	60	I/O	PA4
13	I/O	PC2	29	I/O	PD7	45	I	CS	61	I/O	PA5
14	I/O	PC3	30	I/O	D0	46	I/O	A0	62	I/O	PA6
15	I/O	PC4	31	I/O	D1	47	I/O	A1	63	I/O	PA7
16	I/O	PC5	32	I/O	D2	48	I/O	A2	64	I/O	PB0

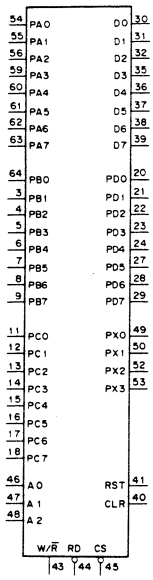

INPUT
A0 – A2 : ADDRESS
CLR : CLEAR
$\overline{CS}$: CHIP SELECT
$\overline{RD}$: READ STROBE
RST : RESET
W/$\overline{R}$: WRITE ENABLE

INPUT/OUTPUT
D0 – D7 : DATA
PA0 – PA7 : PORT A
PB0 – PB7 : PORT B
PC0 – PC7 : PORT C
PD0 – PD7 : PORT D
PX0 – PX7 : PORT X

CXD8167Q (SONY)

C-MOS LTC DELAY
– TOP VIEW –

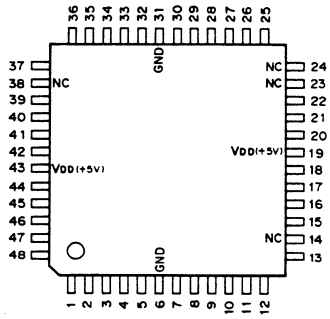

(VDD = + 5V)

PIN No.	I/O	SIGNAL	PIN No.	I/O	SIGANL	PIN No.	I/O	SIGNAL	PIN No.	I/O	SIGNAL
1	I	S5	13	I	TSI6	25	O	SO6	37	O	SO9
2	I	S6	14	–	NC	26	O	SO5	38	–	NC
3	I	S7	15	I/O	TDIO	27	O	SO2	39	I	RET
4	I	S8	16	I	TWE	28	O	SO1	40	I	DLY
5	I	CLK	17	I	TCK1	29	O	SO0	41	I	INIT
6	–	GND	18	I	TST1	30	O	TPO	42	I	LTCI
7	O	CLK0	19	–	VDD	31	–	GND	43	–	VDD
8	I	TSI1	20	I	TST2	32	O	LTCO	44	I	S0
9	I	TSI2	21	I	TADD	33	O	SO3	45	I	S1
10	I	TSI3	22	I	TCK2	34	O	SO4	46	I	S2
11	I	TSI4	23	–	NC	35	O	SO7	47	I	S3
12	I	TSI5	24	–	NC	36	O	SO8	48	I	S4

INPUT
CLK : CLOCK IN
DLY : DELAY/THROUGH
INIT : TEST
LTCI : LTC IN
RET : TEST
S0 – 8 : DELAY CONTROL
TADD : TEST
TCK1, 2 : TEST
TSI1 – 6 : TEST
TWE : TEST
TST1, 2 : TEST

OUTPUT
CLKO : CLOCK OUT
LTCO : LTC OUT
SO0 – 9 : TEST
TPO : TEST

INPUT/OUTPUT
TDIO : TEST

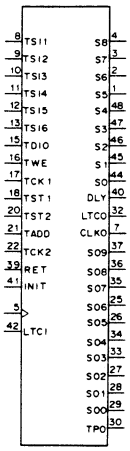

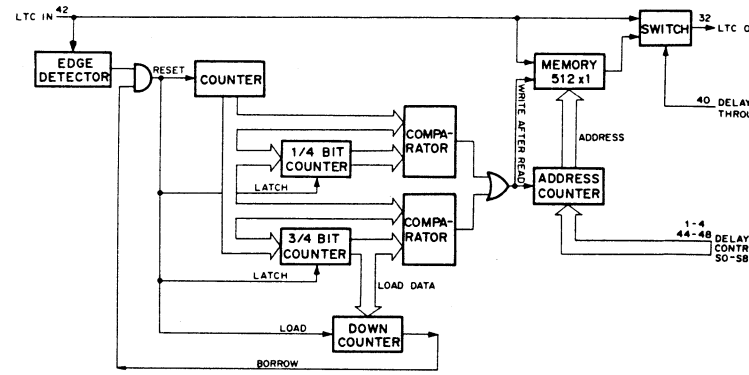

CXD8173G (SONY)

C-MOS GATE ARRAY
– BOTTOM VIEW –

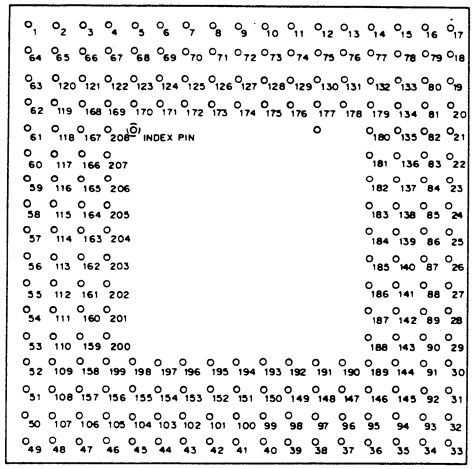

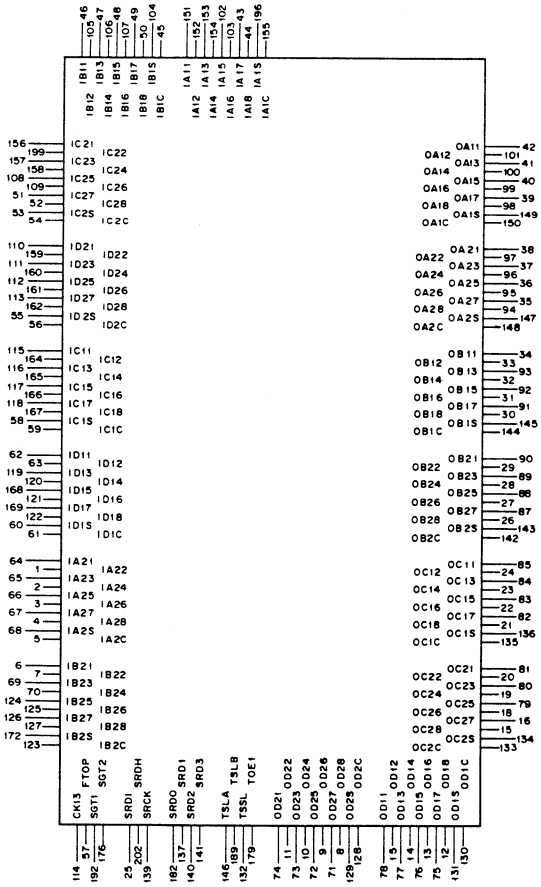

(VDD = + 5V)

PIN No.	I/O	SIGNAL	PIN No.	I/O	SIGNAL	PIN No.	I/O	SIGNAL	PIN No.	I/O	SIGNAL	PIN No.	I/O	SIGNAL
1	I	IA22	43	I	IA17	85	O	OC11	127	I	IB28	169	I	ID17
2	I	IA24	44	I	IA18	86	O	SREN	128	O	OD2C	170	–	GND
3	I	IA26	45	I	IB1C	87	O	OB27	129	O	OD2S	171	–	VDD
4	I	IA28	46	I	IB11	88	O	OB25	130	O	OD1C	172	I	IB2S
5	I	IA2C	47	I	IB13	89	O	OB23	131	O	OD1S	173	–	GND
6	I	IB21	48	I	IB15	90	O	OB21	132	I	TSSL	174	–	GND
7	I	IB22	49	I	IB17	91	O	OB17	133	O	OC2C	175	–	VDD
8	O	OD28	50	I	IB18	92	O	OB15	134	O	OC2S	176	I	SGT2
9	O	OD26	51	I	IC27	93	O	OB13	135	O	OC1C	177	–	GND
10	O	OD24	52	I	IC28	94	O	OA28	136	O	OC1S	178	–	VDD
11	O	OD22	53	I	IC2S	95	O	OA26	137	I	SRD1	179	I	TQE1
12	O	OD18	54	I	IC2C	96	O	OA24	138	O	SRD0	180	–	GND
13	O	OD16	55	I	ID2S	97	O	OA22	139	I	SRCK	181	–	VDD
14	O	OD14	56	I	ID2C	98	O	OA18	140	I	SRD2	182	I	SRD0
15	O	OD12	57	I	FTOP	99	O	OA16	141	I	SRD3	183	–	GND
16	O	OC27	58	I	IC1S	100	O	OA14	142	O	OB2C	184	–	GND
17	O	OC28	59	I	IC1C	101	O	OA12	143	O	OB2S	185	–	VDD
18	O	OC26	60	I	ID1S	102	I	IA15	144	O	OB1C	186	–	GND
19	O	OC24	61	I	ID1C	103	I	IA16	145	O	OB1S	187	–	GND
20	O	OC22	62	I	ID11	104	I	IB1S	146	I	TSLA	188	–	VDD
21	O	OC18	63	I	ID12	105	I	IB12	147	O	OA2S	189	I	TSLB
22	O	OC16	64	I	IA21	106	I	IB14	148	O	OA2C	190	–	GND
23	O	OC14	65	I	IA23	107	I	IB16	149	O	OA1S	191	–	VDD
24	O	OC12	66	I	IA25	108	I	IC25	150	O	OA1C	192	I	SGT1
25	I	SRDI	67	I	IA27	109	I	IC26	151	I	IA11	193	–	GND
26	O	OB28	68	I	IA2S	110	I	ID21	152	I	IA12	194	–	GND
27	O	OB26	69	I	IB23	111	I	ID23	153	I	IA13	195	–	VDD
28	O	OB24	70	I	IB24	112	I	ID25	154	I	IA14	196	I	IA1S
29	O	OB22	71	O	OD27	113	I	ID27	155	I	IA1C	197	–	GND
30	O	OB18	72	O	OD25	114	I	CK13	156	I	IC21	198	–	VDD
31	O	OB16	73	O	OD23	115	I	IC11	157	I	IC23	199	I	IC22
32	O	OB14	74	O	OD21	116	I	IC13	158	I	IC24	200	–	GND
33	O	OB12	75	O	OD17	117	I	IC15	159	I	ID22	201	–	VDD
34	O	OB11	76	O	OD15	118	I	IC17	160	I	ID24	202	I	SRHD
35	O	OA27	77	O	OD13	119	I	ID13	161	I	ID26	203	–	GND
36	O	OA25	78	O	OD11	120	I	ID14	162	I	ID28	204	–	GND
37	O	OA23	79	O	OC25	121	I	ID16	163	–	NC	205	–	VDD
38	O	OA21	80	O	OC23	122	I	ID18	164	I	IC12	206	–	GND
39	O	OA17	81	O	OC21	123	I	IB2C	165	I	IC14	207	–	GND
40	O	OA15	82	O	OC17	124	I	IB25	166	I	IC16	208	–	VDD
41	O	OA13	83	O	OC15	125	I	IB26	167	I	IC18			
42	O	OA11	84	O	OC13	126	I	IB27	168	I	ID15			

INPUT

CK13 ; CLOCK 13.5 MHz
FTOP ; FRAME TOP PULSE
IA11 – IA18 ; CH-A1 DATA (IA11 : MSB)
IA1C, IA1S ; CH-A1 CLOCK AND BLOCK SYNC
IA21 – IA28 ; CH-A2 DATA (IA21 : MSB)
IA2C, IA2S ; CH-A2 CLOCK AND BLOCK SYNC
IB11 – IB18 ; CH-B1 DATA (IB11 : MSB)
IB1C, IB1S ; CH-B1 CLOCK AND BLOCK SYNC
IB21 – IB28 ; CH-B2 DATA (IB21 : MSB)
IB2C, IB2S ; CH-B2 CLOCK AND BLOCK SYNC
IC11 – IC18 ; CH-C1 DATA (IC11 : MSB)
IC1C, IC1S ; CH-C1 CLOCK AND BLOCK SYNC
IC21 – IC28 ; CH-C2 DATA (IC21 : MSB)
IC2C, IC2S ; CH-C2 CLOCK AND BLOCK SYNC
ID11 – ID18 ; CH-D1 DATA (ID11 : MSB)
ID1C, ID1S ; CH-D1 CLOCK AND BLOCK SYNC
ID21 – ID28 ; CH-D2 DATA (ID21 : MSB)
ID2C, ID2S ; CH-D2 CLOCK AND BLOCK SYNC
SGT1, SGT2 ; TRACK TOP PULSE
SRD0 – SRD3 ; DEVICE NUMBER FOR SERIAL INTERFACE
SRCK ; CLOCK FOR SERIAL INTERFACE
SRDI ; DATA FOR SERIAL INTERFACE
SRHD ; TOP PULSE FOR SERIAL INTERFACE
TQE1, TSLA,
TSLB, TSSL ; TEST USE

OUTPUT

OA11 – OA18 ; CH-A1 DATA (OA11 : MSB)
OA1C, OA1S ; CH-A1 CLOCK AND BLOCK SYNC
OA21 – OA28 ; CH-A2 DATA (OA21 : MSB)
OA2C, OA2S ; CH-A2 CLOCK AND BLOCK SYNC
OB11 – OB18 ; CH-B1 DATA (OB11 : MSB)
OB1C, OB1S ; CH-B1 CLOCK AND BLOCK SYNC
OB21 – OB28 ; CH-B2 DATA (OB21 : MSB)
OB2C, OB2S ; CH-B2 CLOCK AND BLOCK SYNC
OC11 – OC18 ; CH-C1 DATA (OC11 : MSB)
OC1C, OC1S ; CH-C1 CLOCK AND BLOCK SYNC
OC21 – OC18 ; CH-C2 DATA (OC21 : MSB)
OC2C, OC2S ; CH-C2 CLOCK AND BLOCK SYNC
OD11 – OD18 ; CH-D1 DATA (OD11 : MSB)
OD1C, OD1S ; CH-D1 CLOCK AND BLOCK SYNC
OD21 – OD28 ; CH-D2 DATA (OD21 : MSB)
OD2C, OD2S ; CH-D2 CLOCK AND BLOCK SYNC
SRDO ; OUTPUT DATA OF SERIAL INTERFACE
SREN ; OUTPUT DATA ENABLE OF SERIAL INTERFACE

CXD8174G (SONY)

C-MOS GATE ARRAY

– BOTTOM VIEW –

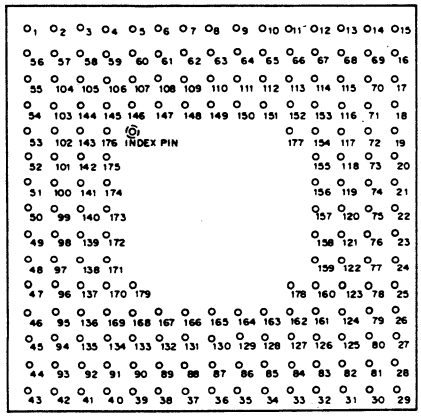

(VDD = + 5V)

PIN No.	I/O	SIGNAL	PIN No.	I/O	SIGNAL	PIN No.	I/O	SIGNAL	PIN No.	I/O	SIGNAL
1	I	SDA7	46	I	SDB7	91	O	TRTL	136	I	SQTH
2	I	SDA8	47	I	SSLI	92	O	TREQ	137	I	SYMD
3	I	ISYA	48	I	SLSL	93	I	SDB4	138	I	CK
4	O	MFT1	49	I	FTOP	94	I	SDB6	139	I	XTCK
5	O	MFT2	50	I	SGTP	95	I	SDB8	140	I	CKBY
6	O	MGT1	51	I	CMPS	96	I	FIOF	141	–	–
7	O	MGT2	52	I	EXEN	97	I	FSOF	142	–	–
8	O	ACRF	53	I	EXAD	98	–	–	143	I	XACK
9	O	CRCF	54	I	SDA1	99	I	ADOF	144	O	WEO1
10	O	CORF	55	I	SDA3	100	I	SLAD	145	O	WEO2
11	O	FLPR	56	I	SDA5	101	I	CFOF	146	–	GND
12	O	CNEN	57	I	SDA6	102	I	SLEN	147	–	GND
13	O	SYNI	58	O	MEDP	103	I	SDA2	148	–	VDD
14	O	INQ7	59	O	MEIN	104	I	SDA4	149	–	GND
15	O	INQ8	60	–	–	105	O	SPH1	150	–	VDD
16	O	INQ6	61	O	MEAD	106	O	SPH2	151	–	GND
17	O	INQ4	62	O	VCFA	107	O	SPH3	152	I	CROF
18	O	INQ2	63	O	VDTE	108	I	WCK	153	I	BYPS
19	O	ESA1	64	O	EOAD	109	I	XTRE	154	–	GND
20	O	ESA2	65	O	EOCF	110	I	XTWE	155	–	GND
21	O	ESA3	66	O	ECOR	111	I	XTST	156	–	VDD
22	O	ESA4	67	I	IENI	112	I	XMM	157	–	GND
23	I	SRDR	68	I	ISLI	113	I	FLSL	158	–	VDD
24	O	SREN	69	O	INQ5	114	I	AUDE	159	–	GND
25	O	SRDO	70	O	INQ3	115	I	VIDE	160	I	TSHT
26	O	SYQ8	71	O	INQ1	116	I	THIN	161	I	TSMD
27	O	SYQ6	72	O	ESAV	117	O	ESVD	162	–	GND
28	O	SYQ4	73	–	–	118	I	CKS	163	–	GND
29	O	SYQ2	74	–	–	119	I	SRD3	164	–	VDD
30	O	SYQ1	75	O	SRO2	120	I	SRCK	165	–	GND
31	O	SYNS	76	O	SRO1	121	I	SRD2	166	–	VDD
32	O	OSYN	77	I	SRHD	122	I	SRD1	167	–	GND
33	O	FSYN	78	I	SRDI	123	I	SRD0	168	I	DTTH
34	O	SEC8	79	O	SYQ7	124	–	–	169	I	PHTH
35	O	SEC7	80	O	SYQ5	125	I	CRID	170	–	GND
36	O	SEC6	81	O	SYQ3	126	I	MD56	171	–	GND
37	O	SEC5	82	O	SYTL	127	I	TRST	172	–	VDD
38	O	SEC4	83	O	SYPR	128	O	BLK8	173	–	GND
39	O	SEC3	84	O	OGPD	129	O	BLK7	174	–	VDD
40	O	SEC2	85	I	HDN4	130	O	BLK6	175	–	GND
41	O	SEC1	86	I	HDN3	131	O	BLK5	176	–	–
42	I	SDB2	87	I	HDN2	132	O	BLK4	177	–	–
43	I	SDB1	88	I	HDN1	133	O	BLK3	178	I	TSTP
44	I	SDB3	89	I	BCK	134	O	BLK2	179	I	PHEN
45	I	SDB5	90	O	TRTP	135	O	BLK1			

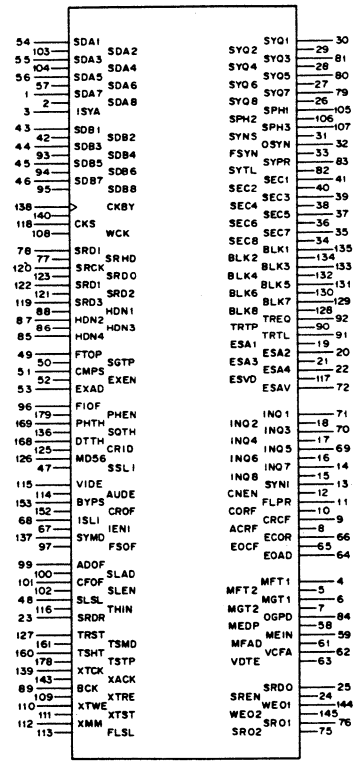

INPUT

ADOF, AUDE, BCK, BYPS, CFOF	; TEST USE
CK	; CLOCK (PLAY BACK RATE)
CKBY	; TEST USE
CKS	; CLOCK (REC RATE)
CMPS	; TRACK DATA PHASE COMPOSITE PULSE
CRID, CROF, DTTH, EXAD, EXEN, FIOF, FLSL, FSOF	; TEST USE
FTOP	; FRAME TOP PULSE
HDN1 – HDN4	; HEAD NUMBER
IENI, ISLI	; TEST USE
ISYA	; BYPASS BLOCK SYNC
MD56, PHEN, PHTH	; TEST USE
SDA1 – SDA8	; BYPASS DATA 8 BIT (SDA1 : MSB)
SDB1 – SDB8	; PB DATA 8 BIT (SDB1 : MSB)
SGTP	; TRACK TOP PULSE
SLAD, SLEN, SLSL, SQTH, SSLI	; TEST USE
SRDI	; DATA INPUT FOR SERIAL INTERFACE
SRCK	; CLOCK FOR SERIAL INTERFACE
SRD0 – SRD3	; DEVICE NUMBER FOR SERIAL INTERFACE
SRDR	; TEST USE
SRHD	; TOP PULSE FOR SERIAL INTERFACE
SYMD, THIN, TRST, TSHT, TSMD, TSTP, VIDE	; TEST USE
WCK	; INTERNAL RAM WRITE ENABLE
XACK, XMM, XTCK, XTRE, XTST, XTWE	; TEST USE

OUTPUT

ACRF	; ERROR FLAG AFTER INNER CODE CORRECTION
BLK1 – BLD8	; SYNC BLOCK ID NUMBER (BLK1 : MSB)
CNEN, CORF	; TEST USE
CRCF	; ERROR FLAG AFTER INNER CODE DETECTION
EOAD, EOCF, ECOR, ESA1 – ESA4	; TEST USE
ESAV	; BLOCK SYNC OF AUDIO/VIDEO SECTOR PHASE
ESVD, FLPR, FSYN	; TEST USE
INQ1 – INQ8	; OUTPUT DATA AFTER INNER CODE CORRECTION (INQ1 : MSB)
MEAD	; TEST USE
MEDP	; WINDOW OF AUDIO/VIDEO SECTOR PHASE
MEIN, MFT1, MFT2, MGT1, MGT2, OGPD, OSYN	; TEST USE
SEC1 – SEC8	; SECTOR, FIELD, SEGMENT ID (SEC1 : MSB)
SPH1 – SPH3	; TEST USE
SRDO	; OUTPUT DATA OF SERIAL INTERFACE
SREN	; OUTPUT DATA ENABLE OF SERIAL INTERFACE
SRO1, SRO2	; TEST USE
SYNI	; OUTPUT BLOCK SYNC PULSE
SYNS, SYPR	; TEST USE
SYQ1 – SYQ8	; OUTPUT DATA AFTER BLOCK SYNC, ID DETECTION (SYQ1 : MSB)
SYTL	; TEST USE
TREQ	; ON TRACK STATUS
TRTL	; TRACK END BLOCK SYNC
TRTP	; TRACK TOP BLOCK SYNC
VCFA, VDTE	; TEST USE

CXD8179G (SONY)

C-MOS GATE ARRAY
– BOTTOM VIEW –

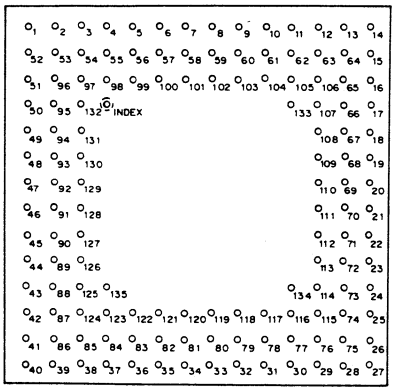

V_{DD} = + 5V

PIN No.	I/O	SIGNAL	PIN No.	I/O	SIGNAL	PIN No.	I/O	SIGNAL	PIN No.	I/O	SIGNAL
1	I/O	MB23	35	O	AD13	69	O	BDQ8	103	I	ID2
2	I/O	MB21	36	O	AD11	70	O	ACQ2	104	I	ID3
3	O	CS22	37	O	CS13	71	O	ACQ4	105	–	GND
4	O	CS24	38	O	CS11	72	O	ACQ6	106	O	SDO
5	O	AD22	39	I	EIOS	73	O	ACQ8	107	–	GND
6	O	AD24	40	I	IOEN	74	I	SCK	108	–	V_{DD}
7	O	AD26	41	I/O	MA24	75	I/O	MA43	109	O	SEN
8	O	AD28	42	I/O	MA23	76	I/O	MA31	110	–	GND
9	O	AD2A	43	I/O	MA14	77	I/O	MA33	111	–	V_{DD}
10	O	AD2C	44	I/O	MA13	78	O	AD1C	112	O	ADEN
11	I/O	MB33	45	I	F256	79	O	AD1A	113	I	RCOF
12	I/O	MB31	46	I	CK98	80	O	AD18	114	–	GND
13	I	DEH	47	I	D4	81	O	AD16	115	I	SHD
14	O	ABL	48	I	D2	82	O	AD14	116	–	GND
15	I/O	MB41	49	I	ASTP	83	O	AD12	117	–	V_{DD}
16	I/O	MB42	50	I/O	MB14	84	O	CS14	118	I	LD2
17	O	BDQ1	51	I/O	MB13	85	O	CS12	119	–	GND
18	O	BDQ3	52	I/O	MB24	86	I/O	MA22	120	–	V_{DD}
19	O	BDQ5	53	I/O	MB22	87	I/O	MA21	121	I	SD1
20	O	BDQ7	54	O	CS21	88	I/O	MA12	122	I	LD1
21	O	ACQ1	55	O	CS23	89	I/O	MA11	123	–	GND
22	O	ACQ3	56	O	AD21	90	I	ABRS	124	O	WE1
23	O	ACQ5	57	O	AD23	91	I	CDRS	125	–	GND
24	O	ACQ7	58	O	AD25	92	I	D3	126	–	V_{DD}
25	I	SDI	59	O	AD27	93	I	D1	127	I	TST1
26	I/O	MA41	60	O	AD29	94	I	SGR	128	–	GND
27	I/O	MA42	61	O	AD2B	95	I/O	MB12	129	–	V_{DD}
28	I/O	MA44	62	I/O	MB34	96	I/O	MB11	130	I	TST2
29	I/O	MA32	63	I/O	MB32	97	O	WE2	131	I	ID0
30	I/O	MA34	64	I/O	MB43	98	–	GND	132	–	GND
31	O	AD1B	65	I/O	MB44	99	–	V_{DD}	133	O	AUDL
32	O	AD19	66	O	BDQ2	100	I	ID1	134	I	SD2
33	O	AD17	67	O	BDQ4	101	–	GND	135	I	SET
34	O	AD15	68	O	BDQ6	102	–	V_{DD}			

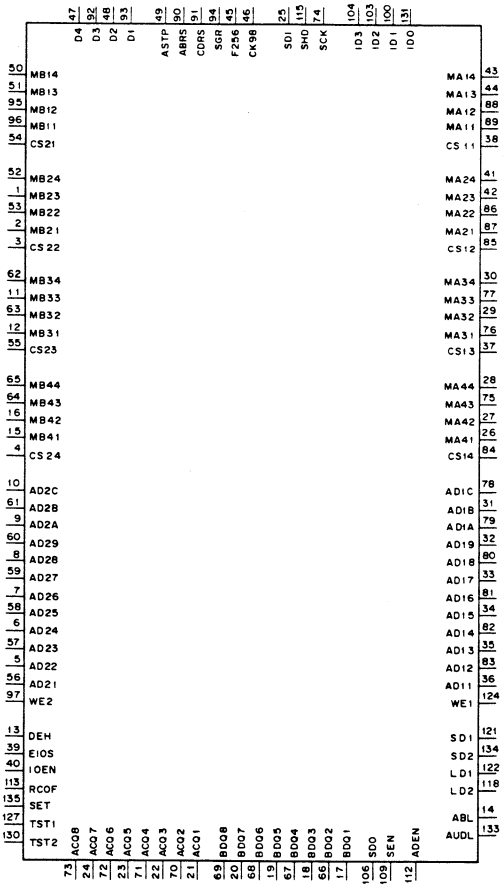

INPUT

ABRS ; A, B TRACK AUDIO DATA READ START
ASTP ; AUDIO SEGMENT TOP
CDRS ; C, D TRACK AUDIO DATA READ START
CK98 ; CLOCK (9.837MHz)
D1 – D4 ; AUDIO DATA
DEH ; TEST PIN
EIOS ; TEST PIN
F256 ; CLOCK (12.288MHz)
ID0 – ID3 ; IC ID (ID3 (MSB) ~ID0 (LSB))
IOEN ; TEST PIN
LD1, LD2 ; TEST PIN
RCOF ; TEST PIN
SCK ; CPU SERIAL INTERFACE CLOCK
SD1, SD2 ; TEST PIN
SDI ; CPU SERIAL INTERFACE DATA (CPU~IC)
SET ; TEST PIN
SGR ; SIGNATURE ENABLE
SHD ; CPU SERIAL INTERFACE ADDRESS HEADER
TST1, TST2 ; TEST PIN

OUTPUT

ABL ; MONITOR PIN
ACQ1 – ACQ8 ; A, C TRACK AUDIO DATA
AD11 – AD19 ; AUDIO SHUFFLING MEMORY ADDRESS (BANK 1)
AD1A ; AUDIO SHUFFLING MEMORY ADDRESS (BANK 1)
AD1B ; AUDIO SHUFFLING MEMORY ADDRESS (BANK 1)
AD1C ; AUDIO SHUFFLING MEMORY ADDRESS (BANK 1)
AD21 – AD29 ; AUDIO SHUFFLING MEMORY ADDRESS (BANK 2)
AD2A ; AUDIO SHUFFLING MEMORY ADDRESS (BANK 2)
AD2B ; AUDIO SHUFFLING MEMORY ADDRESS (BANK 2)
AD2C ; AUDIO SHUFFLING MEMORY ADDRESS (BANK 2)
ADEN ; MONITOR PIN
AUDL ; MONITOR PIN
BDQ1 – BDQ8 ; B, D TRACK AUDIO DATA
CS11 ; SHUFFLING MEMORY 1 (BANK 1) CS
CS12 ; SHUFFLING MEMORY 2 (BANK 1) CS
CS13 ; SHUFFLING MEMORY 3 (BANK 1) CS
CS14 ; SHUFFLING MEMORY 4 (BANK 1) CS
CS21 ; SHUFFLING MEMORY 1 (BANK 2) CS
CS22 ; SHUFFLING MEMORY 2 (BANK 2) CS
CS23 ; SHUFFLING MEMORY 3 (BANK 2) CS
CS24 ; SHUFFLING MEMORY 4 (BANK 2) CS
SDO ; CPU SERIAL INTERFACE DATA (IC→CPU)
SEN ; CPU SERIAL INTERFACE DATA (SDO) ENABLE
WE1, WE2 ; SHUFFLING MEMORY WRITE ENABLE

INPUT/OUTPUT

MA11 – MA14 ; AUDIO SHUFFLING DATA (MEMORY 1, BANK 1)
MA21 – MA24 ; AUDIO SHUFFLING DATA (MEMORY 2, BANK 1)
MA31 – MA34 ; AUDIO SHUFFLING DATA (MEMORY 3, BANK 1)
MA41 – MA44 ; AUDIO SHUFFLING DATA (MEMORY 4, BANK 1)
MB11 – MB14 ; AUDIO SHUFFLING DATA (MEMORY 1, BANK 2)
MB21 – MB24 ; AUDIO SHUFFLING DATA (MEMORY 2, BANK 2)
MB31 – MB34 ; AUDIO SHUFFLING DATA (MEMORY 3, BANK 2)
MB41 – MB44 ; AUDIO SHUFFLING DATA (MEMORY 4, BANK 2)

CXD8201Q (SONY) FLAT PACKAGE
C-MOS GATE ARRAY
– TOP VIEW –

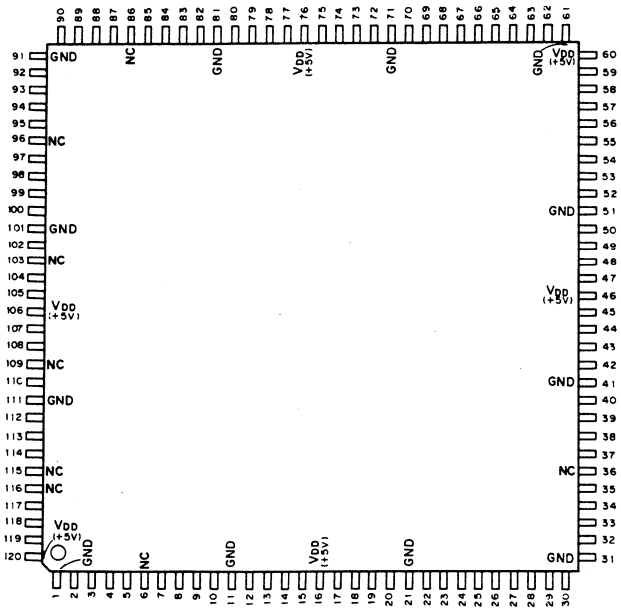

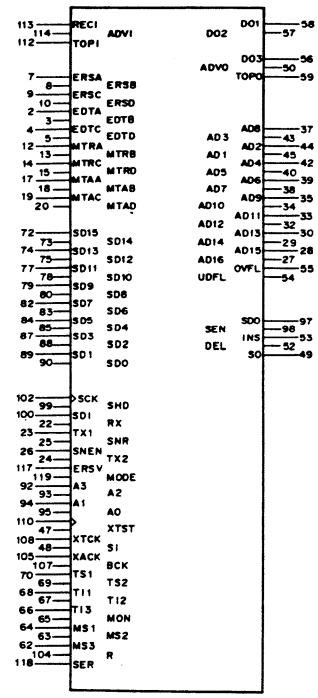

(VDD = + 5V)

PIN No.	I/O	SIGNAL	PIN No.	I/O	SIGNAL	PIN No.	I/O	SIGNAL	PIN No.	I/O	SIGNAL
1	–	GND	31	–	GND	61	–	GND	91	–	GND
2	I	EDTA	32	O	AD12	62	I	MS3	92	I	A3
3	I	EDTB	33	O	AD11	63	I	MS2	93	I	A2
4	I	EDTC	34	O	AD10	64	I	MS1	94	I	A1
5	I	EDTD	35	O	AD9	65	I	MON	95	I	A0
6	–	NC	36	–	NC	66	I	TI3	96	–	NC
7	I	ERSA	37	O	AD8	67	I	TI2	97	O	SDO
8	I	ERSB	38	O	AD7	68	I	TI1	98	O	SEN
9	I	ERSC	39	O	AD6	69	I	TS2	99	I	SHD
10	I	ERSD	40	O	AD5	70	I	TS1	100	I	SDI
11	–	GND	41	–	GND	71	–	GND	101	–	GND
12	I	MTRA	42	O	AD4	72	I	SD15	102	I	SCK
13	I	MTRB	43	O	AD3	73	I	SD14	103	–	NC
14	I	MTRC	44	O	AD2	74	I	SD13	104	I	R
15	I	MTRD	45	O	AD1	75	I	SD12	105	I	XACK
16	–	VDD	46	–	VDD	76	–	VDD	106	–	VDD
17	I	MTAA	47	I	XTST	77	I	SD11	107	I	BCK
18	I	MTAB	48	I	SI	78	I	SD10	108	I	XTCK
19	I	MTAC	49	O	SO	79	I	SD9	109	–	NC
20	I	MTAD	50	O	ADVO	80	I	SD8	110	I	CK
21	–	GND	51	–	GND	81	–	GND	111	–	GND
22	I	RX	52	O	DEL	82	I	SD7	112	I	TOPI
23	I	TX1	53	O	INS	83	I	SD6	113	I	RECI
24	I	TX2	54	O	UDFL	84	I	SD5	114	I	ADVI
25	I	SNR	55	O	OVFL	85	I	SD4	115	–	NC
26	I	SNEN	56	O	DO3	86	–	NC	116	–	NC
27	O	AD16	57	O	DO2	87	I	SD3	117	I	ERSV
28	O	AD15	58	O	DO1	88	I	SD2	118	I	SER
29	O	AD14	59	O	TOPO	89	I	SD1	119	I	MODE
30	O	AD13	60	–	VDD	90	I	SD0	120	–	VDD

INPUT

A0 – A3	; DEVICE NUMBER FOR SERIAL INTERFACE
ADVI	; AUDIO ADVANCE DATA
BCK	; TEST PIN
CK	; CLOCK PULSE (12.288MHz)
EDTA – EDTD	; EDIT PULSE
ERSA – ERSD	; SPOT ERASE PULSE
ERSV	; RESET THE VALIDITY BIT IN CASE OF SPOT ERASE
MODE	; MODE SELECT (LEVEL CONTROLLER/CROSSFADER)
MON, MS1 – MS3	; TEST PINS
MTAA – MTAD	; MUTE PULSE FOR ADVI
MTRA – MTRD	; MUTE PULSE FOR RECI
R	; TEST PIN
RECI	; AUDIO EDIT SOURCE
RX	; SERIAL DATA LOAD PULSE
SCK	; CLOCK PULSE FOR SERIAL INTERFACE
SD0 – SD15	; TEST PINS
SDI	; SERIAL DATA
SER	; TEST PIN
SHD	; DATA TOP SIGNAL FOR INPUT SERIAL DATA
SI	; TEST PIN
SNEN	; ENABLE PULSE FOR SIGNATURE CALCULATOR
SNR	; RESET PULSE FOR SIGNATURE CALCULATOR
TI1 – TI3	; TEST PIN
TOPI	; DATA TOP SIGNAL FOR INPUT DATA
TS1, TS2	; TEST PIN
TX1	; PERIODIC PULSE FOR PEAK HOLDER
TX2	; PERIODIC PULSE FOR SIGNATURE CALCULATOR
XACK, XTCK, XTST	; TEST PINS

OUTPUT

AD1 – AD16	; ADDITION DATA (ANCILLARY DATA)
ADVO	; ADVACE DATA (32 CK DELAY OF ADVI)
DEL	; SPOT ERASE PERIOD
D01, D02	; TEST PINS
D03	; OUTPUT DATA
INS	; EDIT PERIOD
OVFL	; OVERFLOW
SDO	; OUTPUT SERIAL DATA (PEAK DATA AND SIGNATURE)
SEN	; ENABLE PULSE FOR SDO
SO	; TEST PIN
TOPO	; DATA TOP SIGNAL FOR OUTPUT DATA
UDFL	; UNDERFLOW

CXD8215Q (SONY) FLAT PACKAGE

C-MOS GATE ARRAY

– TOP VIEW –

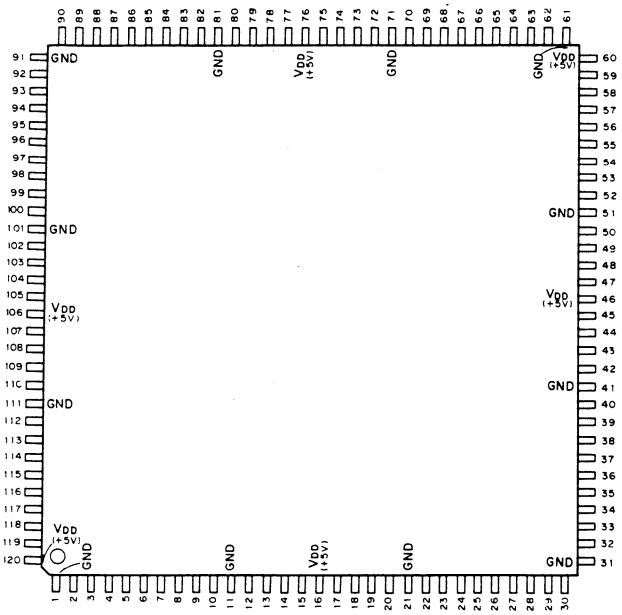

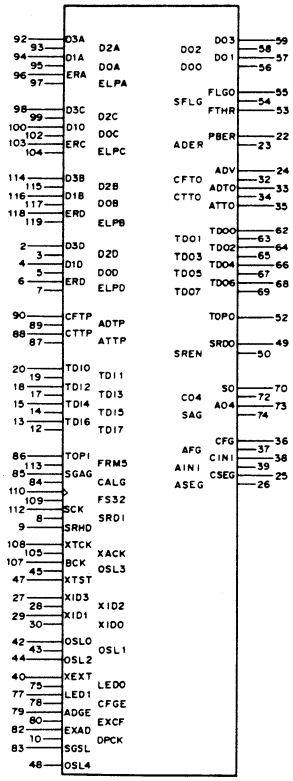

(VDD = + 5V)

PIN No.	I/O	SIGNAL	PIN No.	I/O	SIGNAL	PIN No.	I/O	SIGNAL	PIN No.	I/O	SIGNAL
1	–	GND	31	–	GND	61	–	GND	91	–	GND
2	I	D3D	32	O	CFTO	62	O	TDO0	92	I	D3A
3	I	D2D	33	O	ADTO	63	O	TDO1	93	I	D2A
4	I	D1D	34	O	CTTO	64	O	TDO2	94	I	D1A
5	I	D0D	35	O	ATTO	65	O	TDO3	95	I	D0A
6	I	ERD	36	O	CFG	66	O	TDO4	96	I	ERA
7	I	ELPD	37	O	AFG	67	O	TDO5	97	I	ELPA
8	I	SRDI	38	O	CINI	68	O	TDO6	98	I	D3C
9	I	SRHD	39	O	AINI	69	O	TDO7	99	I	D2C
10	I	DPCK	40	I	XEXT	70	O	SO	100	I	D1C
11	–	GND	41	–	GND	71	–	GND	101	–	GND
12	I	TDI7	42	I	OSL0	72	O	C04	102	I	D0C
13	I	TDI6	43	I	OSL1	73	O	A04	103	I	ERC
14	I	TDI5	44	I	OSL2	74	O	SAG	104	I	ELPC
15	I	TDI4	45	I	OSL3	75	I	LED0	105	I	XACK
16	–	VDD	46	–	VDD	76	–	VDD	106	–	VDD
17	I	TDI3	47	I	XTST	77	I	LED1	107	I	BCK
18	I	TDI2	48	I	OSL4	78	I	CFGE	108	I	XTCK
19	I	TDI1	49	O	SRDO	79	I	ADGE	109	I	FS32
20	I	TDI0	50	O	SREN	80	I	EXCF	110	I	CK
21	–	GND	51	–	GND	81	–	GND	111	–	GND
22	O	PBER	52	O	TOPO	82	I	EXAD	112	I	SCK
23	O	ADER	53	O	FTHR	83	I	SGSL	113	I	FRM5
24	O	ADV	54	O	SFLG	84	I	CALG	114	I	D3B
25	O	CSEG	55	O	FLGO	85	I	SGAG	115	I	D2B
26	O	ASEG	56	O	DO0	86	I	TOPI	116	I	D1B
27	I	XID3	57	O	DO1	87	I	ATTP	117	I	D0B
28	I	XID2	58	O	DO2	88	I	CTTP	118	I	ERB
29	I	XID1	59	O	DO3	89	I	ADTP	119	I	ELPB
30	I	XID0	60	–	VDD	90	I	CFTP	120	–	VDD

INPUT

ADGE	; ERROR COUNT ENABLE GATE FOR ADVANCE DATA
ADTP	; FRAME TOP FOR ADVANCE DATA
ATTP	; FRAME TOP FOR ADVANCE ADDITION DATA
BCK	; TEST USE
CALG	; SIGNATURE CALCULATE GATE
CFGE	; ERROR COUNT ENABLE GATE FOR CONFI DATA
CFTP	; FRAME TOP FOR CONFI DATA
CK	; FS256 CLOCK (48KHz×256 = 12.288MHz)
CTTP	; FRAME TOP FOR CONFI ADDITION DATA
D0A – D3A	; A CH DATA INPUT (D3A : MSB)
D0B – D3B	; B CH DATA INPUT (D3B : MSB)
D0C – D3C	; C CH DATA INPUT (D3C : MSB)
D0D – D3D	; D CH DATA INPUT (D3D : MSB)
DPCK	; EXTERNAL DISPLAY CLOCK FOR LED
ELPA, ELPB, ELPC, ELPD	; ELAP FLAG INPUT A – D CH
ERA, ERB, ERC, ERD	; ERROR FLAG INPUT A – D CH
EXAD	; EXTENAL COUNT GATE FOR ADVANCE DATA
EXCF	; EXTENAL COUNT GATE FOR CONFI DATA
FRM5	; 5 FRAME PLUSE
FS32	; FS32 CLOCK (48K × 32 = 1.536MHz)
LED0, LED1	; LED DISPLAY TIME CONTROL
OSL0 – OSL4	; TEST USE
SCK	; SERIAL INTERFACE CLOCK
SGAG	; SIGNATURE ANALYSIS GATE
SGSL	; SIGNATURE SELECT
SRDI	; DATA INPUT FOR SERIAL INTERFACE
SRHD	; DATA TOP FOR SERIAL INTERFACE
TDI0 – TDI7	; TEST USE
TOPI	; OUTER CODE TOP PULSE
XACK	; TEST USE
XEXT	; MODE CONTROL FOR ERROR COUNT GATE INPUT
XID0 – XID3	; CHIP ID
XTCK, XTST	; TEST USE

OUTPUT

A04	; TEST USE
ADER	; ADVANCE DATA ERROR FOR LED DISPLAY
ADT0	; FRAME TOP PULSE FOR ADVANCE DATA
ADV	; * CONFI/ADVANCE
AFG	; ADVANCE ERROR FLAG COUNT GATE
AINI	; TEST USE
ASEG	; SEGMENT PULSE FOR ADVANCE DATA
ATT0	; FRAME TOP PULSE FOR ADVANCE ADDITION DATA
C04	; TEST USE
CFG	; CONFI ERROR FLAG COUNT GATE
CFTO	; FRAME TOP PULSE FOR CONFI DATA
CINI	; TEST USE
CSEG	; SEGMENT PULSE FOR CONFI DATA
CTTO	; FRAME TOP PULSE FOR CONFI ADDITION DATA (ASTC TOP)
DO0 – DO3	; DATA OUTPUT (DO3 : MSB)
FLGO	; ERROR FLAG OUTPUT ("H" = ERROR)
FTHR	; THROUGH ERROR FLAG (INNER ERROR FLAG)
PBER	; CONFI DATA ERROR FOR LED DISPLAY
SAG	; SIGNATURE GATE
SO	; TEST USE
SRDO	; DATA OUTPUT FOR SERIAL INTERFACE
SREN	; DATA ENABLE FOR SERIAL INTERFACE
SFLG	; SELECTED ERROR FLAG
TDO0 – TDO7	; TEST USE
TOPO	; OUTER CODE TOP PULSE

CXD8216AG (SONY)
CXD8216G (SONY)

C-MOS GATE ARRAY
– BOTTOM VIEW –

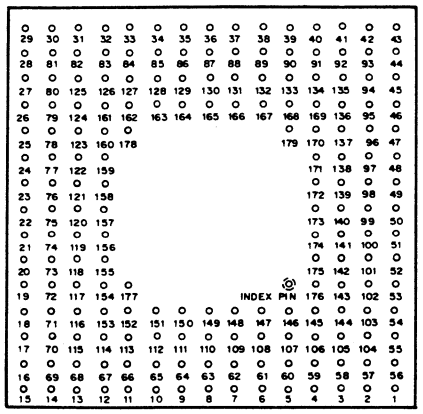

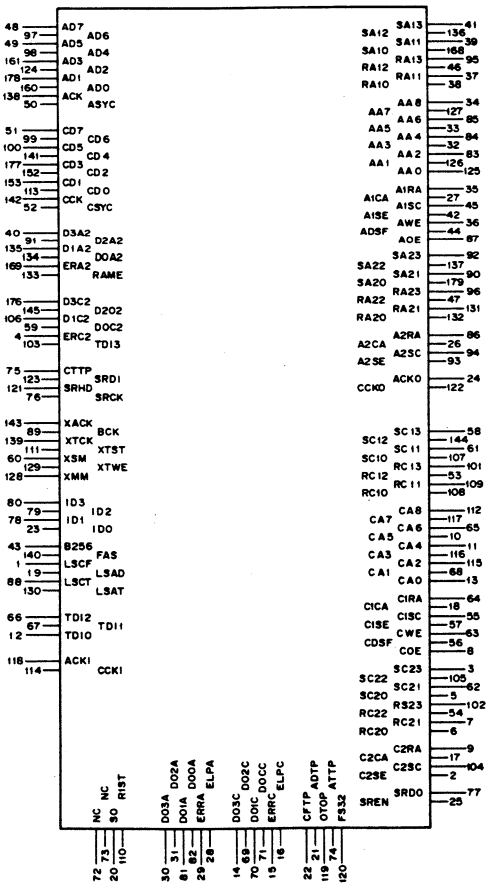

(VDD = + 5V)

PIN No.	I/O	SIGNAL	PIN No.	I/O	SIGNAL	PIN No.	I/O	SIGNAL	PIN No.	I/O	SIGNAL
1	I	LSCF	46	I/O	RA12	91	I	D2A2	136	O	SA12
2	O	C2SE	47	I/O	RA22	92	O	SA23	137	O	SA22
3	O	SC23	48	I	AD7	93	O	A2SE	138	I	ACK
4	I	ERC2	49	I	AD5	94	O	A2SC	139	I	XTCK
5	O	SC20	50	I	ASYC	95	I/O	RA13	140	I	FAS
6	I/O	RC20	51	I	CD7	96	I/O	RA23	141	I	CD4
7	I/O	RC21	52	I	CSYC	97	I	AD6	142	I	CCK
8	O	COE	53	I/O	RC12	98	I	AD4	143	I	XACK
9	O	C2RA	54	I/O	RC22	99	I	CD6	144	O	SC12
10	O	CA5	55	O	C1SC	100	I	CD5	145	I	D2C2
11	O	CA4	56	O	CDSF	101	I/O	RC13	146	–	GND
12	I	TDI0	57	O	C1SE	102	I/O	RC23	147	–	GND
13	O	CA0	58	O	SC13	103	I	TDI3	148	–	VDD
14	O	DO3C	59	I	D0C2	104	O	C2SC	149	–	GND
15	O	ERRC	60	I	XSM	105	O	SC22	150	–	VDD
16	O	ELPC	61	O	SC11	106	I	D1C2	151	–	GND
17	O	C2CA	62	O	SC21	107	O	SC10	152	I	CD2
18	O	C1CA	63	O	CWE	108	I/O	RC10	153	I	CD1
19	I	LSAD	64	O	C1RA	109	I/O	RC11	154	–	GND
20	O	SO	65	O	CA6	110	O	R1ST	155	–	GND
21	O	ADTP	66	I	TDI2	111	I	XTST	156	–	VDD
22	O	CFTP	67	I	TDI1	112	O	CA8	157	–	GND
23	I	ID0	68	O	CA1	113	I	CD0	158	–	VDD
24	O	ACKO	69	O	DO2C	114	I	CCKI	159	–	GND
25	O	SREN	70	O	DO1C	115	O	CA2	160	I	AD0
26	O	A2CA	71	O	DO0C	116	O	CA3	161	I	AD3
27	O	A1CA	72	–	NC	117	O	CA7	162	–	GND
28	O	ELPA	73	–	NC	118	I	ACKI	163	–	GND
29	O	ERRA	74	O	ATTP	119	O	OTOP	164	–	VDD
30	O	DO3A	75	I/O	CTTP	120	O	FS32	165	–	GND
31	O	DO2A	76	I	SRCK	121	I	SRHD	166	–	VDD
32	O	AA3	77	O	SRDO	122	O	CCKO	167	–	GND
33	O	AA5	78	I	ID1	123	I	SRDI	168	O	SA10
34	O	AA8	79	I	ID2	124	I	AD2	169	I	ERA2
35	O	A1RA	80	I	ID3	125	O	AA0	170	–	GND
36	O	AWE	81	O	DO1A	126	O	AA1	171	–	GND
37	I/O	RA11	82	O	DO0A	127	O	AA7	172	–	VDD
38	I/O	RA10	83	O	AA2	128	I	XMM	173	–	GND
39	O	SA11	84	O	AA4	129	I	XTWE	174	–	VDD
40	I	D3A2	85	O	AA6	130	I	LSAT	175	–	GND
41	O	SA13	86	O	A2RA	131	I/O	RA21	176	I	D3C2
42	O	A1SE	87	O	AOE	132	I/O	RA20	177	I	CD3
43	I	F256	88	I	LSCT	133	I	RAME	178	I	AD1
44	O	ADSF	89	I	BCK	134	I	D0A2	179	O	SA20
45	O	A1SC	90	O	SA21	135	I	D1A2			

INPUT

ACK	; A CH PB CLOCK
ACKI	; A CH PB NIBBLE CLOCK
AD0 – AD7	; A CH DATA INPUT (AD7 : MSB)
ASYC	; A CH SYNC
BCK	; TEST USE
CCK	; C CH PB CLOCK
CCKI	; C CH PB NIBBLE CLOCK
CD0 – CD7	; C CH DATA INPUT (CD7 : MSB)
CSYC	; C CH SYNC
D0A2, D1A2, D2A2, D3A2	; A2 CH READ OUT DATA (D3A2 : MSB)
D0C2, D1C2, D2C2, D3C2	; C2 CH READ OUT DATA (D3C2 : MSB)
ERA2	; A2 CH ERROR FLAG
ERC2	; C2 CH ERROR FLAG
F256	; FS256 CLOCK (12.288 MHz)
FAS	; FAS CLOCK (48 KHz)
ID0 – ID3	; CHIP ID
LSAD	; LIP SYNC MEMORY READ START FOR ADVANCE DATA
LSAT	; LIP SYNC MEMORY READ START FOR ADVANCE ADDITION DATA
LSCF	; LIP SYNC MEMORY READ START FOR CONFI DATA
LSCT	; LIP SYNC MEMORY READ START FOR CONFI ADDITION DATA
RAME	; TEST USE
SRDI	; DATA INPUT FOR SERIAL INTERFACE
TDI0 – TDI3	; TEST USE
XACK, XMM, XSM	; TEST USE
XTCK, XTST, XTWE	; TEST USE

OUTPUT

A1CA, A2CA	; CAS FOR A1, A2 RAM
A1RA	; RAS FOR A1, A2 RAM
A1SC	; DRAM SERIAL CLOCK FOR A1 RAM
A2RA	; RAS FOR A2 RAM
A2SC	; DRAM SERIAL CLOCK FOR A2 RAM
A2SE	; DRAM SERIAL ENABLE GATE FOR A2 RAM
AA0 – AA8	; DRAM ADDRESS FOR A1, A2 RAM
ACKO	; A CH PB NIBBLE CLOCK OUT
ADSF	; DSF FOR A1, A2 RAM
ADTP	; FRAME TOP PULSE FOR ADVANCE DATA
AOE	; DRAM OUTPUT ENABLE FOR A1, A2 RAM
ATTP	; FRAME TOP PULSE FOR ADVANCE ADDITION DATA
AWE	; DRAM WE FOR A1, A2 RAM
C1CA	; CAS FOR C1 RAM
C1RA	; RAS FOR C1 RAM
C1SC	; DRAM SERIAL CLOCK FOR C1 RAM
C1SE	; DRAM SERIAL ENABLE GATE FOR C1 RAM
C2CA	; CAS FOR C2 RAM
C2RA	; RAS FOR C2 RAM
C2SC	; DRAM SERIAL CLOCK FOR C2 RAM
C2SE	; DRAM SERIAL ENABLE GATE FOR C2 RAM
CA0 – CA8	; DRAM ADDRESS FOR C1, C2 RAM
CCKO	; C CH PB NIBBLE CLOCK OUT
CDSF	; DSF FOR C1, C2 RAM
CFTP	; FRAME TOP PULSE FOR CONFI DATA
COE	; DRAM OUTPUT ENABLE FOR C1, C2 RAM
CWE	; DRAM WE FOR C1, C2 RAM
DO0A – DO3A	; A CH DATA OUTPUT
DO0C – DO3C	; C CH DATA OUTPUT
ELPA, ELPC	; A CH ELAP FLAG, C CH ELAP FLAG
ERRA, ERRC	; A CH ERROR FLAG, C CH ERROR FLAG
FS32	; FS32 CLOCK FOR OUTER DECODER
OTOP	; OUTER CODE TOP PULSE FOR OUTER DECODER
R1ST	; TEST USE
SA10 – SA13	; SERIAL ACCESS MEMORY (SAM) DATA INPUT FOR A1 RAM
SA20 – SA23	; SERIAL ACCESS MEMORY (SAM) DATA INPUT FOR A2 RAM
SC10 – SC13	; SERIAL ACCESS MEMORY (SAM) DATA INPUT FOR C1 RAM
SC20 – SC23	; SERIAL ACCESS MEMORY (SAM) DATA INPUT FOR C2 RAM
SO	; TEST USE
SRDO	; DATA OUTPUT FOR SERIAL INTERFACE
SREN	; DATA ENABLE FOR SERIAL INTERFACE

INPUT/OUTPUT

CTTP	; FRAME TOP PULSE FOR CONFI ADDITION DATA (ASTC TOP)
RA10 – RA13	; DRAM DATA INPUT/OUTPUT FOR A1 RAM
RA20 – RA23	; DRAM DATA INPUT/OUTPUT FOR A2 RAM
RC10 – RC13	; DRAM DATA INPUT/OUTPUT FOR C1 RAM
RC20 – RC23	; DRAM DATA INPUT/OUTPUT FOR C2 RAM

CXD8224ASP (SONY)
CXD8224S (SONY)

C-MOS GATE ARRAY
– TOP VIEW –

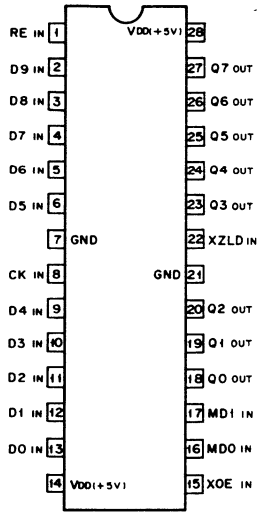

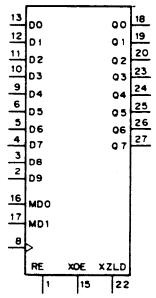

INPUT
CK ; CLOCK
D0 – D9 ; DATA INPUTS
MD0, 1 ; MODE SELECT
RE ; ROUNDING ENABLE
XOE ; OUTPUT ENABLE
XZLD ; TEST CONTROL

OUTPUT
Q0 – Q7 ; DATA OUTPUTS

CXD8225AG (SONY)

C-MOS DVITC ENCODER/DECODER
– BOTTOM VIEW –

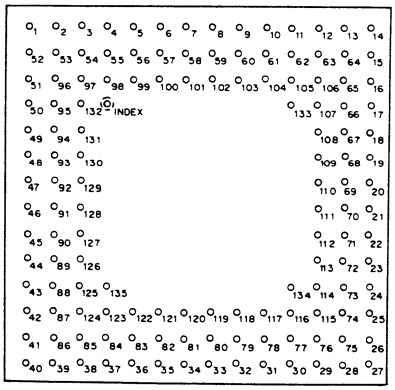

VDD = + 5V

PIN No.	I/O	SIGNAL	PIN No.	I/O	SIGNAL	PIN No.	I/O	SIGNAL	PIN No.	I/O	SIGNAL
1	I	RESET	35	I	YE1	69	O	YOUT4	103	–	NC
2	–	NC	36	I	ADRS3	70	O	YOUT2	104	–	NC
3	–	NC	37	I	ADRS1	71	O	YOUT0	105	–	GND
4	–	NC	38	I	CS	72	O	CRCC	106	–	NC
5	–	NC	39	I	RW	73	O	SYNB	107	–	GND
6	I	CE7	40	I/O	DATA 7	74	O	BGFG0	108	–	VDD
7	I	CE5	41	I/O	DATA 5	75	O	BGFG1	109	–	NC
8	I	CE3	42	I/O	DATA 3	76	O	DFFG	110	–	GND
9	I	CE1	43	I/O	DATA 1	77	O	CFFG	111	–	VDD
10	–	NC	44	I	HIN	78	–	NC	112	–	NC
11	–	NC	45	I	FIN	79	I	YE6	113	–	NC
12	O	FOUT	46	I	CKIN	80	I	YE4	114	–	GND
13	O	HOUT	47	–	NC	81	I	YE2	115	–	NC
14	O	COUT7	48	–	NC	82	I	YE0	116	–	GND
15	O	COUT5	49	–	NC	83	I	ADRS2	117	–	VDD
16	O	COUT3	50	–	NC	84	I	ADRS0	118	–	NC
17	O	COUT1	51	I	H525	85	I	WRITE	119	–	GND
18	O	YOUT7	52	I	TST	86	I/O	DATA6	120	–	VDD
19	O	YOUT5	53	O	INSP	87	I/O	DATA4	121	–	NC
20	O	YOUT3	54	–	NC	88	I/O	DATA2	122	–	NC
21	O	YOUT1	55	–	NC	89	I/O	DATA0	123	–	GND
22	O	FRST1	56	–	NC	90	–	NC	124	–	NC
23	O	FRST2	57	–	NC	91	I	YD7	125	–	GND
24	O	POLAE	58	I	CE6	92	–	NC	126	–	VDD
25	O	DEVITC	59	I	CE4	93	–	NC	127	–	NC
26	O	READY	60	I	CE2	94	–	NC	128	–	GND
27	O	FMARK	61	I	CE0	95	–	NC	129	–	VDD
28	O	UNASSB	62	–	NC	96	O	SOUT	130	–	NC
29	–	NC	63	O	LSFT	97	–	NC	131	–	NC
30	–	NC	64	O	COUT6	98	–	GND	132	–	GND
31	I	ADRS4	65	O	COUT4	99	–	VDD	133	–	NC
32	I	YE7	66	O	COUT2	100	–	NC	134	–	NC
33	I	YE5	67	O	COUT0	101	–	GND	135	–	NC
34	I	YE3	68	O	YOUT6	102	–	VDD			

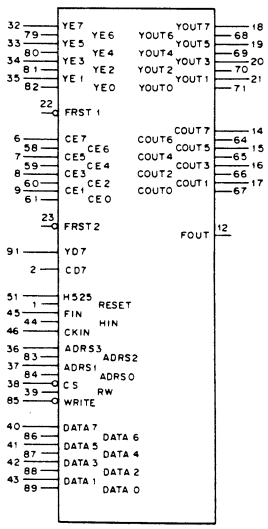

INPUT
ADRS4 – ADRS0 ; ADDRESS 4 – 0
CE7 – CE0 ; DELAYED C INPUTS 7 – 0
CKIN ; CLOCK (13.5 MHz)
CS ; CHIP SELECT
FIN ; FRAME PULSE
H525 ; 525/625 SELECT PULSE
HIN ; H PULSE
RESET ; RESET
RW ; READ/WRITE PULSE
TST ; TEST PIN
WRITE ; WRITE PULSE
YD7 ; Y INPUT 7 (MSB)
YE7 – YE0 ; DELAYED Y INPUTS 7 – 0

OUTPUT
BGFG0 ; BINARY GROUP FLAG0
BGFG1 ; BINARY GROUP FLAG1
CFFG ; COLOR FRAME FLAG
COUT7 – COUT0 ; C OUTPUTS 7 – 0
CRCC ; CRCC ERROR
DEVITC ; DETECTION OF VITC
DFFG ; DROP FRAME FLAG
FMARK ; FIELD MARK PULSE
FOUT ; FRAME PULSE
FRST1 ; RESET FOR EXT. FIFO MEMORY1
FRST2 ; RESET FOR EXT. FIFO MEMORY2
HOUT ; H PULSE
INSP ; TEST PIN
LSFT ; LINE SHIFT STATUS
POLAE ; POLARITY ERROR
READY ; DECODE COMPLETE
SOUT ; TEST PIN
SYNB ; SYNC BIT ERROR
UNASSB ; UNSSIGNED PULSE
YOUT7 – YOUT0 ; Y OUTPUTS 7 – 0

INPUT/OUTPUT
DATA7 – DATA0 ; DATA7 – 0

CXD8226P (SONY)

C-MOS GATE ARRAY PB CTL SEPARATION
– TOP VIEW –

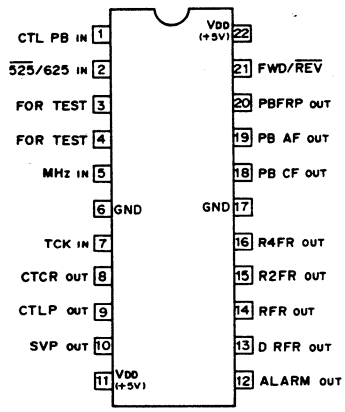

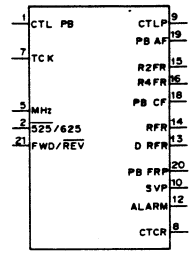

INPUT
525/625 ; H : 625 MODE, L : 525 MODE
CTL PB ; PB CTL PULSE
FWD/REV ; H : FWD, L : REV
MHz ; 3.6864 MHz CLOCK
TCK ; 1.5 × 4T PULSE

OUTPUT
ALARM ; H : ALARM
CTCR ; RATE GENERATOR RESET PULSE
CTLP ; CTL DETECT PULSE
D RFR ; FRAME PULSE (NARROW PULSE)
PBAF ; AUDIO FRAME PULSE
PBCF ; COLOR FRAME PULSE
PBFRP ; VIDEO FRAME DETECT PULSE
R2FR ; 2 FRAME PULSE
R4FR ; 4 FRAME PULSE
RFR ; FRAME PULSE
SVP ; SV PULSE

CXD8246Q (SONY)

C-MOS GATE ARRAY
– TOP VIEW –

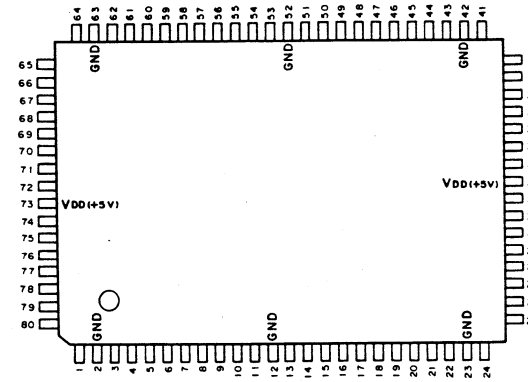

(VDD = + 5V)

PIN No.	I/O	SIGNAL	PIN No.	I/O	SIGNAL	PIN No.	I/O	SIGNAL	PIN No.	I/O	SIGNAL
1	I	SYSF	21	O	EDT4	41	O	SREN	61	O	SGRS
2	–	GND	22	O	SPT4	42	–	GND	62	O	MUTE
3	I	PWRS	23	–	GND	43	I	FM51	63	–	GND
4	I	CKVT	24	O	ADM1	44	I	C481	64	I	CK25
5	O	RECG	25	O	ADM2	45	O	S211	65	I	VLCI
6	O	PRVG	26	O	ADM3	46	O	SGT1	66	I	ALCI
7	O	EDIT	27	O	ADM4	47	O	FRT1	67	I	SYSH
8	I	TSTA	28	O	ADM5	48	I	FM52	68	I	CK13
9	O	FREC	29	O	ADM6	49	I	C482	69	O	LOCK
10	O	EDTV	30	O	ADM7	50	O	S212	70	I	AFTI
11	O	PRVV	31	O	ADM8	51	O	SGT2	71	I	DRUM
12	–	GND	32	I	SRDI	52	–	GND	72	I	DRMD
13	I	CK48	33	–	VDD	53	O	FRT2	73	–	VDD
14	I	ASEG	34	I	SRHD	54	I	BCIN	74	I	ASHF
15	O	EDT1	35	I	SRCK	55	I	F5TP	75	I	CIHF
16	O	SPT1	36	I	SRD0	56	O	CHN0	76	O	RC5F
17	O	EDT2	37	I	SRD1	57	O	CHN1	77	O	SV5F
18	O	SPT2	38	I	SRD2	58	I	SGT1	78	O	AFRM
19	O	EDT3	39	I	SRD3	59	I	FRM5	79	O	CFRM
20	O	SPT3	40	O	SRDO	60	O	SGTO	80	I	TSTC

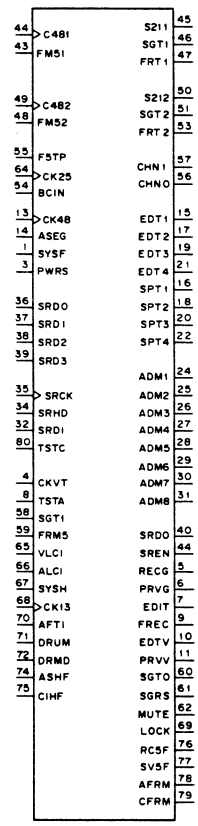

INPUT
AFTI ; AUDIO PLAYBACK 5 FRAME
ALCI ; AUDIO PLL LOCK STATUS
ASEG ; AUDIO SEGMENT PULSE FOR EDITTING
ASHF ; CLOCK FOR ADVANCE 5 FRAME ADJUSTMENT
BCIN ; AUDIO 48 kHz FOR A SYNCRONOUS DETECTOR
C481, C482 ; AUDIO 48 kHz FOR SEGMENT PULSE GENERATOR
CIHF ; CLOCK FOR CONFI 5 FRAME ADJUSTMENT
CK13 ; CLOCK 13.5 MHz
CK25 ; CLOCK 12.288 MHz
CK48 ; CLOCK 48 kHz FOR EDITTING
CKVT ; VIDEO UPPER SEGMENT TOP PULSE
DRMD ; DELAY DRUM PULSE
DRUM ; DRUM PULSE
F5TP ; AUDIO 5 FRAME FOR A SYNCRONOUS DETECTOR
FM51, FM52 ; AUDIO 5 FRAME PULSE FOR SEGMENT GENERATOR
FRM5 ; AUDIO 5 FRAME FOR SEGMENT RE-GENERATOR
PWRS ; POWER ON RESET
SRD0 – SRD3 ; DEVICE NUMBER FOR SERIAL INTERFACE
SRCK ; CLOCK FOR SERIAL INTERFACE
SRDI ; DATA INPUT FOR SERIAL INTERFACE
SRHD ; TOP PULSE FOR SERIAL INTERFACE
SYSF ; SYSTEM VIDEO FRAME PULSE
SYSH ; SYSTEM VIDEO H-SYNC PULSE
TSTA, TSTC ; TEST USE
VLCI ; VIDEO PLL LOCK STATUS

OUTPUT
ADM1 – ADM8 ; AUDIO EDIT FRAME PULSE 1 – 8
AFRM ; ADVANCE AUDIO 5 FRAME
CFRM ; CONFI AUDIO 5 FRAME
CHN0, CHN1 ; AUDIO CHANNEL ASSIGN FOR A SYNCRONOUS DETECTOR
EDT1 – EDT4 ; AUDIO EDIT SEGMENT PULSE 1 – 4
EDIT ; VIDEO EDIT FIELD PULSE
EDTV ; VIDEO EDIT FRAME PULSE
FREC ; VIDEO FORCE REC FRAME PULSE
FRT1, FRT2 ; AUDIO FRAME TOP PULSE OF SEGMENT GENATOR
LOCK ; PLL LOCK STATUS
MUTE ; AUDIO MUTE PULSE
PRVG ; VIDEO PREVIEW GATE
PRVV ; VIDEO PREVIEW FRAME PULSE
RC5F ; AUDIO 5 FRAME FOR AUDIO REC
RECG ; VIDEO REC GATE
S211, S212 ; AUDIO 320/321 SAMPLE/SEGMENT
SGRS ; AUDIO 5 FRAME OF SEGMENT REGENERATOR
SGT1, SGT2 ; AUDIO SEGMENT PULSE
SGTO ; AUDIO SEGMENT TOP PULSE OF REGENERATOR
SPT1 – SPT4 ; AUDIO SPOT ERASE SEGMENT PULSE 1 – 4
SRDO ; OUTPUT DATA OF SERIAL INTERFACE
SREN ; OUTPUT DATA ENABLE OF SERIAL INTERFACE
SV5F ; AUDIO 5 FRAME FOR SERVO CONTROL

CXD8247Q (SONY)

C-MOS GATE ARRAY
– TOP VIEW –

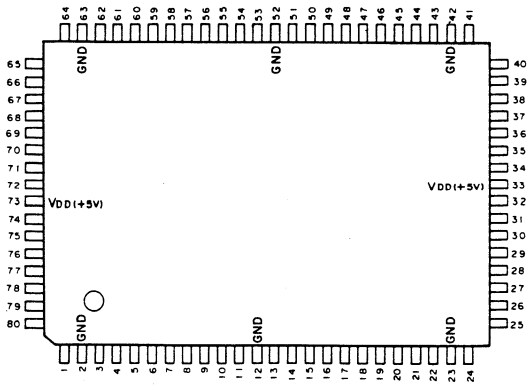

(VDD = + 5V)

PIN No.	I/O	SIGNAL	PIN No.	I/O	SIGNAL	PIN No.	I/O	SIGNAL	PIN No.	I/O	SIGNAL
1	I	CK	21	I	PONB	41	O	SREN	61	I	PBC6
2	–	GND	22	I	PONA	42	–	GND	62	I	PBC7
3	O	ODY0	23	–	GND	43	I	PWRS	63	–	GND
4	O	ODY1	24	I	SYSF	44	I	TSTW	64	I	EEY0
5	O	ODY2	25	I	VTMG	45	I	TSTO	65	I	EEY1
6	O	ODY3	26	I	PRVL	46	I	PBY0	66	I	EEY2
7	O	ODY4	27	I	ANCL	47	I	PBY1	67	I	EEY3
8	O	ODY5	28	I	HBLK	48	I	PBY2	68	I	EEY4
9	O	ODY6	29	I	SGEN	49	I	PBY3	69	I	EEY5
10	O	ODY7	30	I	FTOP	50	I	PBY4	70	I	EEY6
11	I	TSTC	31	I	CNEN	51	I	PBY5	71	I	EEY7
12	–	GND	32	I	SRDI	52	–	GND	72	I	EEC0
13	O	ODC0	33	–	VDD	53	I	PBY6	73	–	VDD
14	O	ODC1	34	I	SRHD	54	I	PBY7	74	I	EEC1
15	O	ODC2	35	I	SRCK	55	I	PBC0	75	I	EEC2
16	O	ODC3	36	I	SRD0	56	I	PBC1	76	I	EEC3
17	O	ODC4	37	I	SRD1	57	I	PBC2	77	I	EEC4
18	O	ODC5	38	I	SRD2	58	I	PBC3	78	I	EEC5
19	O	ODC6	39	I	SRD3	59	I	PBC4	79	I	EEC6
20	O	ODC7	40	O	SRDO	60	I	PBC5	80	I	EEC7

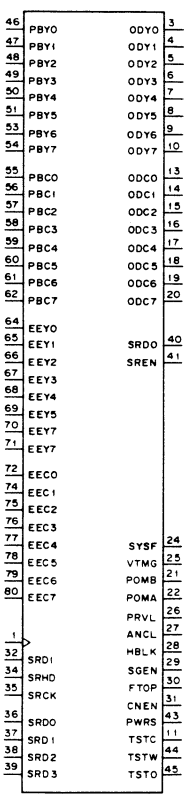

INPUT

ANCL	; ANCILLARY INTERVAL PULSE
CNEN	; COUNT ENABLE
EEC0 – EEC7	; EE C DATA (8 BIT EEC0 : MSB)
EEY0 – EEY7	; EE Y DATA (8 BIT EEY0 : MSB)
FTOP	; FRAME TOP PULSE
HBLK	; H BLANKING PULSE
PBC0 – PBC7	; PB C DATA (8 BIT PBC0 : MSB)
PBY0 – PBY7	; PB Y DATA (8 BIT PBY0 : MSB)
POMA, POMB	; TEST USE
PRVL	; PREVIEW PULSE
PWRS	; POWER ON RESET
SGEN	; SIGNATURE ENABLE
SRCK	; CLOCK FOR SERIAL INTERFACE
SRD0 – SRD3	; DEVICE NUMBER FOR SERIAL INTERFACE
SRDI	; DATA FOR SERIAL INTERFACE
SRHD	; TOP PULSE FOR SERIAL INTERFACE
SYSF	; SYSTEM FRAME PULSE
TSTC, TSTO, TSTW	; TEST USE
VTMG	; V LATCH TIMING PULSE

OUTPUT

ODC0 – ODC7	; C DATA (8 BIT ODC0 : MSB)
ODY0 – ODY7	; Y DATA (8 BIT ODY0 : MSB)
SRDO	; OUTPUT DATA OF SERIAL INTERACE
SREN	; OUTPUT DATA ENABLE OF SERIAL INTERFACE

CXD8248Q (SONY)

C-MOS GATE ARRAY
– TOP VIEW –

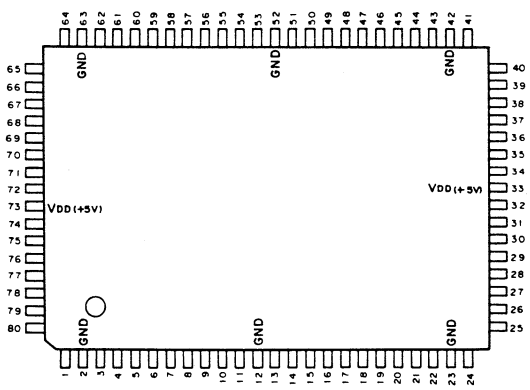

(VDD = + 5V)

PIN No.	I/O	SIGNAL	PIN No.	I/O	SIGNAL	PIN No.	I/O	SIGNAL	PIN No.	I/O	SIGNAL
1	I	CK1	21	O	INT5	41	I	CKA	61	I	DET7
2	–	GND	22	O	END5	42	–	GND	62	I	DET8
3	I	TRG1	23	–	GND	43	I	TRGA	63	–	GND
4	O	INT1	24	I	CK6	44	O	INTA	64	I	SRCK
5	O	END1	25	I	TRG6	45	O	ENDA	65	I	SRDI
6	I	CK2	26	O	INT6	46	I	CKB	66	I	SRHD
7	I	TRG2	27	O	END6	47	I	TRGB	67	I	SRD0
8	O	INT2	28	I	CK7	48	O	INTB	68	I	SRD1
9	O	END2	29	I	TRG7	49	O	ENDB	69	I	SRD2
10	I	CK3	30	O	INT7	50	I	CKC	70	I	SRD3
11	I	TRG3	31	O	END7	51	I	TRGC	71	O	SRDO
12	–	GND	32	I	CK8	52	–	GND	72	O	SREN
13	O	INT3	33	–	VDD	53	O	INTC	73	–	VDD
14	O	END3	34	I	TRG8	54	O	ENDC	74	I	TSTC
15	I	CK4	35	O	INT8	55	I	DET1	75	I	CKF1
16	I	TRG4	36	O	END8	56	I	DET2	76	I	FAL1
17	O	INT4	37	I	CK9	57	I	DET3	77	O	EDG1
18	O	END4	38	I	TRG9	58	I	DET4	78	I	CKF2
19	I	CK5	39	O	INT9	59	I	DET5	79	I	FAL2
20	I	TRG5	40	O	END9	60	I	DET6	80	O	EDG2

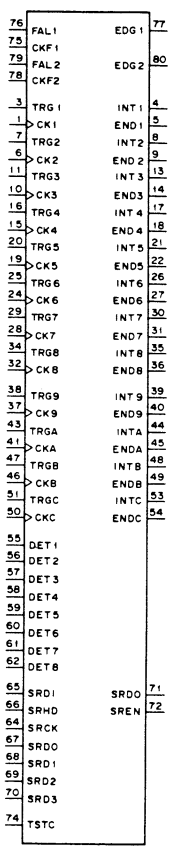

INPUT

CK1 – CK9	; CLOCK FOR DIGITAL ONE SHOT PULSE GENERATOR 1 – 9
CKA, CKB, CKC	; CLOCK FOR DIGITAL ONE SHOT PULSE GENERATOR A – C
CKF1, CKF2	; CLOCK FOR FALLING EDGE DETECTOR 1 – 2
DET1 – DET8	; TRIGGER FOR RISING EDGE DETELTOR 1 – 8
FAL1, FAL2	; TRIGGER FOR FALLING EDGE DETECTOR 1 – 2
SRCK	; CLOCK FOR SERIAL INTERFACE
SRD0 – SRD3	; DEVICE NUMBER FOR SERIAL INTERFACE
SRDI	; DATA INPUT FOR SERIAL INTERFACE
SRHD	; TOP PULSE FOR SERIAL INTERFACE
TRG1 – TRG9	; TRIGGER FOR DIGITAL ONE SHOT PULSE GENERATOR 1 – 9
TRGA, TRGB, TRGC	; TRIGGER FOR DIGITAL ONE SHOT PULSE GENERATOR A – C
TSTC	; TEST USE

OUTPUT

EDG1, EDG2	; FALLING EDGE PULSE 1 – 2
END1 – END9	; END PULSE OF ONE SHOT PULSE GENERATOR 1 – 9
ENDA, ENDB, ENDC	; END PULSE OF ONE SHOT PULSE GENERATOR A – C
INT1 – INT9	; ONE SHOT OUTPUT PULSE OF GENERATOR 1 – 9
INTA, INTB, INTC	; ONE SHOT OUTPUT PULSE GENERATOR A – C
SRDO	; OUTPUT DATA OF SERIAL INTERFACE
SREN	; OUTPUT DATA ENABLE OF SERIAL INTERFACE

CXD8249Q (SONY) FLAT PACKAGE

C-MOS GATE ARRAY

– TOP VIEW –

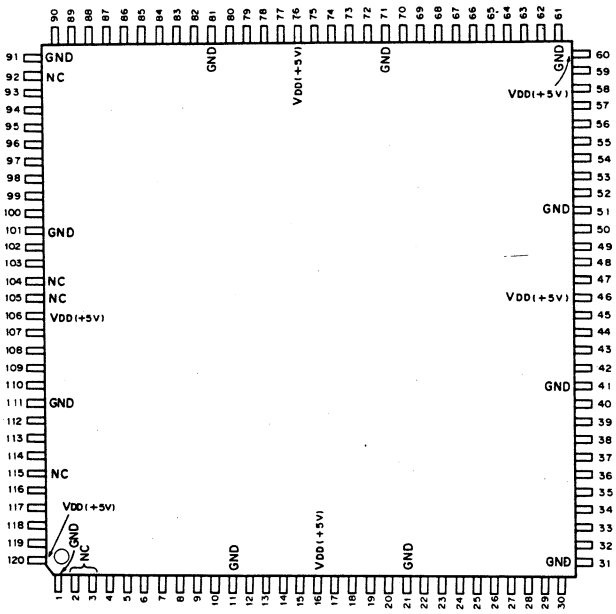

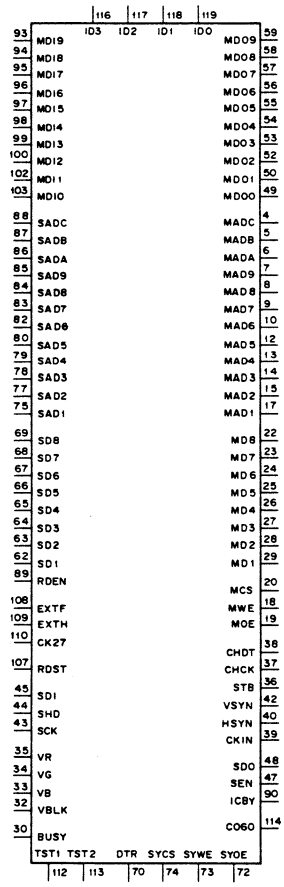

(VDD = + 5V)

PIN No.	I/O	SIGNAL	PIN No.	I/O	SIGNAL	PIN No.	I/O	SIGNAL	PIN No.	I/O	SIGNAL
1	–	GND	31	–	GND	61	–	GND	91	–	GND
2	–	NC	32	I	VBLK	62	I/O	SD1	92	–	NC
3	–	NC	33	I	VB	63	I/O	SD2	93	I	MDI9
4	O	MADC	34	I	VG	64	I/O	SD3	94	I	MDI8
5	O	MADB	35	I	VR	65	I/O	SD4	95	I	MDI7
6	O	MADA	36	O	STB	66	I/O	SD5	96	I	MDI6
7	O	MAD9	37	O	CHCK	67	I/O	SD6	97	I	MDI5
8	O	MAD8	38	O	CHDT	68	I/O	SD7	98	I	MDI4
9	O	MAD7	39	O	CKIN	69	I/O	SD8	99	I	MDI3
10	O	MAD6	40	O	HSYN	70	I	DTR	100	I	MDI2
11	–	GND	41	–	GND	71	–	GND	101	–	GND
12	O	MAD5	42	O	VSYN	72	I	SYOE	102	I	MDI1
13	O	MAD4	43	I	SCK	73	I	SYWE	103	I	MDI0
14	O	MAD3	44	I	SHD	74	I	SYCS	104	–	NC
15	O	MAD2	45	I	SDI	75	I	SAD1	105	–	NC
16	–	VDD	46	–	VDD	76	–	VDD	106	–	VDD
17	O	MAD1	47	O	SEN	77	I	SAD2	107	I	RDST
18	O	MWE	48	O	SDO	78	I	SAD3	108	I	EXTF
19	O	MOE	49	O	MDO0	79	I	SAD4	109	I	EXTH
20	O	MCS	50	O	MDO1	80	I	SAD5	110	I	CK27
21	–	GND	51	–	GND	81	–	GND	111	–	GND
22	I/O	MD8	52	O	MDO2	82	I	SAD6	112	I	TST1
23	I/O	MD7	53	O	MDO3	83	I	SAD7	113	I	TST2
24	I/O	MD6	54	O	MDO4	84	I	SAD8	114	O	C060
25	I/O	MD5	55	O	MDO5	85	I	SAD9	115	–	NC
26	I/O	MD4	56	O	MDO6	86	I	SADA	116	I	ID3
27	I/O	MD3	57	O	MDO7	87	I	SADB	117	I	ID2
28	I/O	MD2	58	O	MDO8	88	I	SADC	118	I	ID1
29	I/O	MD1	59	O	MDO9	89	I	RDEN	119	I	ID0
30	I	BUSY	60	–	VDD	90	O	ICBY	120	–	VDD

INPUT

BUSY ; CHARACTER GEN. BUSY SIGNAL
CK27 ; CLOCK (27MHz)
DTR ; CHARACTER GEN. COMMAND MEMORY READ (L) /WRITE (H)
EXTF ; FRAME SIGNAL
EXTH ; H SYNC
ID0 – ID3 ; IC ID (ID3 (MSB) ~ID0 (LSB))
MDI0 – MDI9 ; 4 : 2 : 2 DIGITAL PARALLEL DATA
RDEN ; CHARACTER GEN. COMMAND MEMORY READ ENABLE
RDST ; CHARACTER GEN. COMMAND MEMORY READ START
SAD1 – SAD9 ; CPU ADDRESS BUS
SADA ; CPU ADDRESS BUS
SADB ; CPU ADDRESS BUS
SADC ; CPU ADDRESS BUS
SCK ; CPU SERIAL INTERFACE CLOCK
SDI ; CPU SERIAL INTERFACE DATA (CPU→IC)
SHD ; CPU SERIAL INTERFACE ADDRESS HEADER
SYCS ; CHARACTER GEN. COMMAND MEMORY CS
SYOE ; CHARACTER GEN. COMMAND MEMORY OE
SYWE ; CHARACTER GEN. COMMAND MEMORY WE
TST1, TST2 ; TEST PIN
VB ; CHARACTER DATA (B)
VBLK ; CHARACTER INPUT ENABLE
VG ; CHARACTER DATA (G)
VR ; CHARACTER DATA (R)

OUTPUT

C060 ; MONITOR PIN
CHCK ; CHARACTER COMMAND SERIAL CLOCK
CHDT ; CHARACTER COMMAND DATA
CKIN ; CHARACTER GEN. CLOCK
HSYN ; CHARACTER GEN. H SYNC
ICBY ; IC BUSY
MAD1 – MAD9 ; CHARACTER GEN. COMMAND MEMORY ADDRESS
MADA ; CHARACTER GEN. COMMAND MEMORY ADDRESS
MADB ; CHARACTER GEN. COMMAND MEMORY ADDRESS
MADC ; CHARACTER GEN. COMMAND MEMORY ADDRESS
MCS ; CHARACTER GEN. COMMAND MEMORY CS
MDO0 – MDO9 ; 4 : 2 : 2 DIGITAL PARALLEL DATA (INSERTED CHARACTER)
MOE ; CHARACTER GEN. COMMAND MEMORY OE
MWE ; CHARACTER GEN. COMMAND MEMORY WE
SDO ; CPU SERIAL INTERFACE DATA (IC→CPU)
SEN ; CPU SERIAL INTERFACE DATA (SDO) ENABLE
STB ; CHARACTER COMMAND STROBE PULSE
VSYN ; CHARACTER GEN. V SYNC

INPUT/OUTPUT

MD1 – MD8 ; CHARACTER GEN. COMMAND DATA BUS
SD1 – SD8 ; CPU DATA BUS

CXD8250G (SONY)

C-MOS GATE ARRAY
– BOTTOM VIEW –

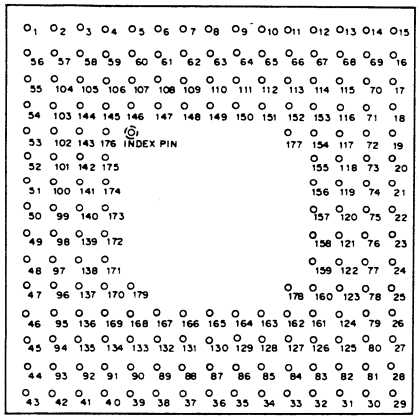

(VDD = + 5V)

PIN No.	I/O	SIGNAL	PIN No.	I/O	SIGNAL	PIN No.	I/O	SIGNAL	PIN No.	I/O	SIGNAL
1	I	FDS	46	I	DP05	91	I	P03	136	I	DP03
2	I	XADV	47	I	DP02	92	I	P04	137	I	DP00
3	I	SERI	48	I	EP07	93	I	OBV	138	I	EP05
4	I	SHD	49	I	EP04	94	I	DP06	139	I	XTCK
5	I	FP0	50	I	EP02	95	I	DP04	140	I	EP00
6	O	F1RE	51	I	C07	96	I	DP01	141	I	C05
7	O	F1RR	52	I	C04	97	I	EP06	142	I	C02
8	O	F1WE	53	I	C01	98	I	EP03	143	I	XACK
9	O	F1WR	54	I	FC0	99	I	EP01	144	I	B06
10	O	F2RE	55	I	B05	100	I	C06	145	–	NC
11	O	F2RR	56	I	CTLF	101	I	C03	146	–	GND
12	O	F2WE	57	I	B01	102	I	C00	147	–	GND
13	O	F2WR	58	I	B00	103	I	B07	148	–	VDD
14	O	H1R	59	–	NC	104	I	B04	149	–	GND
15	O	H2R	60	I	XSM	105	I	B03	150	–	VDD
16	I	MGP8	61	O	CB3	106	I	B02	151	–	GND
17	I	VGP8	62	O	CB2	107	O	CB7	152	I	SID2
18	I	VGM8	63	O	CB1	108	O	CB6	153	I	SID1
19	I	HGP8	64	O	CB0	109	O	CB5	154	–	GND
20	I	HGM8	65	–	NC	110	O	CB4	155	–	GND
21	I	HGV8	66	–	NC	111	I	XTST	156	–	VDD
22	I	PNG8	67	–	NC	112	–	NC	157	–	GND
23	I	XTFE	68	–	NC	113	–	NC	158	–	VDD
24	I	VNG8	69	–	NC	114	I	SID0	159	–	GND
25	I	HNG8	70	O	COB0	115	O	COB1	160	–	NC
26	I	CL91	71	O	COB2	116	O	COB3	161	–	NC
27	I	CL90	72	O	COB4	117	O	COB5	162	–	GND
28	O	SERO	73	O	COB6	118	O	COB7	163	–	GND
29	O	SEN	74	–	NC	119	I	XTR	164	–	VDD
30	O	ACHB	75	I	SCK	120	I	CK	165	–	GND
31	O	LED	76	I	MNG8	121	–	NC	166	–	VDD
32	I	FB0	77	O	RAB0	122	O	RAB1	167	–	GND
33	I	FA0	78	O	RAB2	123	O	RAB3	168	–	NC
34	O	CMB6	79	O	FCB	124	O	FCMB	169	–	NC
35	O	CMB7	80	I	R00	125	I	R01	170	–	GND
36	I	A05	81	I	R02	126	–	NC	171	–	GND
37	I	A06	82	I	R03	127	O	CMB0	172	–	VDD
38	I	A07	83	I	GRF0	128	O	CMB1	173	–	GND
39	I	P05	84	O	CMB3	129	O	CMB2	174	–	VDD
40	I	P06	85	O	CMB4	130	I	A00	175	–	GND
41	I	P07	86	O	CMB5	131	I	A01	176	–	NC
42	I	IBV	87	I	A03	132	I	A02	177	I	SID3
43	I	ACH0	88	I	A04	133	–	NC	178	–	NC
44	I	ACV	89	I	BCK	134	I	P00	179	–	NC
45	I	DP07	90	I	P02	135	I	P01			

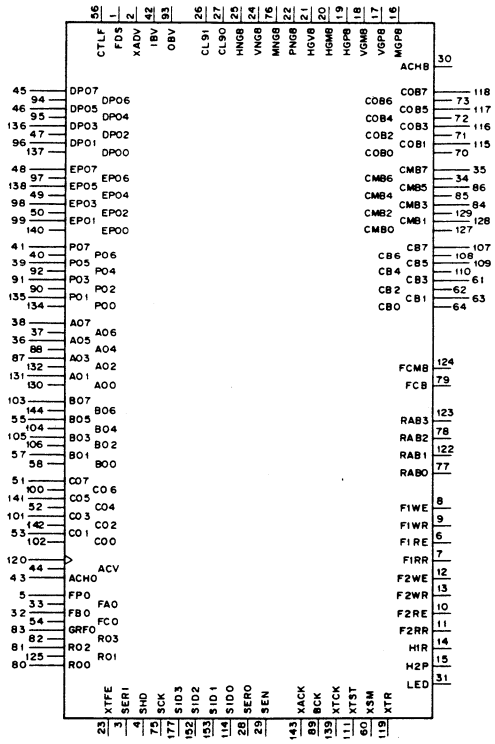

INPUT

A00 – A07 ; A LINE DATA INPUTS
ACH0 ; ACTIVE-H
ACV ; ACTIVE-V
B00 – B07 ; B LINE DATA INPUTS
BCK ; TEST CLOCK
C00 – C07 ; C LINE DATA INPUTS
CTLF ; CONTROL FRAME
DP00 – DP07 ; FIELD DELAY DATA INPUTS
EP00 – EP07 ; (FIELD + 1 LINE) DELAY DATA INPUTS
FA0 ; A LINE FLAG INPUT
FB0 ; B LINE FLAG INPUT
FC0 ; C LINE FLAG INPUT
FDS ; FIELD DELAY DATA SELECT
FP0 ; FRAME DELAY FLAG INPUT
GRF0 ; GRAY FLAG INPUT
HGM8 ; IDEAL DIRECTION H > M
HGP8 ; IDEAL DIRECTION H > P
HGV8 ; IDEAL DIRECTION H > V
HNG8 ; IDEAL DIRECTION H NO GOOD
IBV ; INPUT SIDE BLACK VIDEO
MGP8 ; IDEAL DIRECTION M > P
MNG8 ; IDEAL DIRECTION M NO GOOD
OBV ; OUTPUT SIDE BLACK VIDEO
P00 – P07 ; FRAME DELAY DATA INPUTS
PNG8 ; IDEAL DIRECTION P NO GOOD
R00 – R03 ; RECURSION COUNT INPUTS
SCK ; SERIAL CLOCK
SERI ; SERIAL DATA INPUT
SHD ; SERIAL DATA TOP
SID0 – SID3 ; SERIAL INTERFACE ID
VGM8 ; IDEAL DIRECTION V > M
VGP8 ; IDEAL DIRECTION V > P
VNG8 ; IDEAL DIRECTION V NO GOOD
XACK ; TEST CLOCK
XADV ; 1 LINE ADVANE CONTROL
XSM ; TEST CONTROL
XTCK ; TEST CLOCK

OUTPUT

ACHB ; ACTIVE-H OUTPUT
CB0 – CB7 ; C LINE DATA OUTPUTS
CL90, CL91 ; COLOR DISPLAY MODE
CMB0 – CMB7 ; B LINE DATA OUTPUTS
COB0 – COB7 ; CONCEALED DATA OUTPUTS
F1RE ; FIELD DELAY-1 READ ENABLE
F1RR ; FIELD DELAY-1 READ RESET
F1WE ; FIELD DELAY-1 WRITE ENABLE
F1WR ; FIELD DELAY-1 WRITE RESET
F2RE ; FIELD DELAY-2 READ ENABLE
F2RR ; FIELD DELAY-2 READ RESET
F2WE ; FIELD DELAY-2 WRITE ENABLE
F2WR ; FIELD DELAY-2 WRITE RESET
FCMB ; B LINE FLAG OUTPUT
H1R, H2R ; LINE DELAY RESET 1, 2
LED ; LED MONITOR DATA
RAB0 – RAB3 ; RECUSION COUNT OUTPUTS
SEN ; SERIAL DATA OUTPUT ENABLE
SERO ; SERIAL DATA OUTPUT

CXD8251G (SONY)

C-MOS GATE ARRAY

– BOTTOM VIEW –

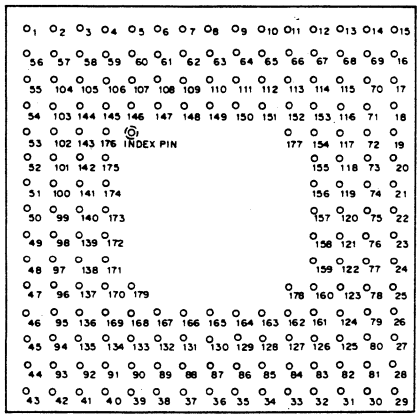

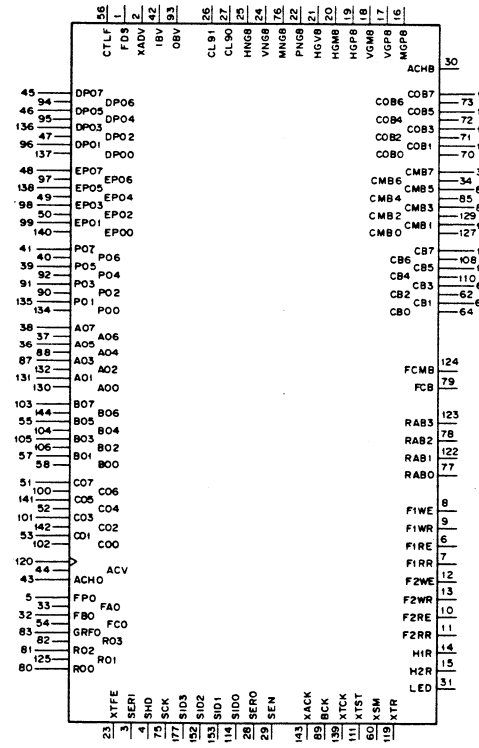

(VDD = + 5V)

PIN No.	I/O	SIGNAL	PIN No.	I/O	SIGNAL	PIN No.	I/O	SIGNAL	PIN No.	I/O	SIGNAL
1	I	FDS	46	I	DP05	91	I	P03	136	I	DP03
2	I	XADV	47	I	DP02	92	I	P04	137	I	DP00
3	I	SERI	48	I	EP07	93	I	OBV	138	I	EP05
4	I	SHD	49	I	EP04	94	I	DP06	139	I	XTCK
5	I	FP0	50	I	EP02	95	I	DP04	140	I	EP00
6	O	F1RE	51	I	C07	96	I	DP01	141	I	C05
7	O	F1RR	52	I	C04	97	I	EP06	142	I	C02
8	O	F1WE	53	I	C01	98	I	EP03	143	I	XACK
9	O	F1WR	54	I	FC0	99	I	EP01	144	I	B06
10	O	F2RE	55	I	B05	100	I	C06	145	–	NC
11	O	F2RR	56	I	CTLF	101	I	C03	146	–	GND
12	O	F2WE	57	I	B01	102	I	C00	147	–	GND
13	O	F2WR	58	I	B00	103	I	B07	148	–	VDD
14	O	H1R	59	–	NC	104	I	B04	149	–	GND
15	O	H2R	60	I	XSM	105	I	B03	150	–	VDD
16	O	MGP8	61	O	CB3	106	I	B02	151	–	GND
17	O	VGP8	62	O	CB2	107	O	CB7	152	I	SID2
18	O	VGM8	63	O	CB1	108	O	CB6	153	I	SID1
19	O	HGP8	64	O	CB0	109	O	CB5	154	–	GND
20	O	HGM8	65	–	NC	110	O	CB4	155	–	GND
21	O	HGV8	66	–	NC	111	I	XTST	156	–	VDD
22	O	PNG8	67	–	NC	112	–	NC	157	–	GND
23	I	XTFE	68	–	NC	113	–	NC	158	–	VDD
24	O	VNG8	69	–	NC	114	I	SID0	159	–	GND
25	O	HNG8	70	O	COB0	115	O	COB1	160	–	NC
26	O	CL91	71	O	COB2	116	O	COB3	161	–	NC
27	O	CL90	72	O	COB4	117	O	COB5	162	–	GND
28	O	SERO	73	O	COB6	118	O	COB7	163	–	GND
29	O	SEN	74	–	NC	119	I	XTR	164	–	VDD
30	O	ACHB	75	I	SCK	120	I	CK	165	–	GND
31	O	LED	76	O	MNG8	121	–	NC	166	–	VDD
32	I	FB0	77	O	RAB0	122	O	RAB1	167	–	GND
33	I	FA0	78	O	RAB2	123	O	RAB3	168	–	NC
34	O	CMB6	79	O	FCB	124	O	FCMB	169	–	NC
35	O	CMB7	80	I	R00	125	I	R01	170	–	GND
36	I	A05	81	I	R02	126	–	NC	171	–	GND
37	I	A06	82	I	R03	127	O	CMB0	172	–	VDD
38	I	A07	83	I	GRF0	128	O	CMB1	173	–	GND
39	I	P05	84	O	CMB3	129	O	CMB2	174	–	VDD
40	I	P06	85	O	CMB4	130	I	A00	175	–	GND
41	I	P07	86	O	CMB5	131	I	A01	176	–	NC
42	I	IBV	87	I	A03	132	I	A02	177	I	SID3
43	I	ACH0	88	I	A04	133	–	NC	178	–	NC
44	I	ACV	89	I	BCK	134	I	P00	179	–	NC
45	I	DP07	90	I	P02	135	I	P01			

INPUT

A00 – A07 : A LINE DATA INPUT
ACH0 : ACTIVE-H
ACV : ACTIVE-V
B00 – B07 : B LINE DATA INPUT
BCK : TEST CLOCK
C00 – C07 : C LINE DATA INPUT
CTLF : CONTROL FRAME
DP00 – DP07 : FIELD DELAY DATA INPUT
EP00 – EP07 : (FIELD + 1) DELAY DATA INPUT
FA0 : A LINE FLAG INPUT
FB0 : B LINE FLAG INPUT
FC0 : C LINE FLAG INPUT
FDS : FIELD DELAY DATA SELECT
FP0 : FRAME DELAY FLAG INPUT
GRF0 : GRAY FLAG INPUT
IBV : INPUT SIDE BLACK VIDEO
OBV : OUTPUT SIDE BLACK VIDEO
P00 – P07 : FRAME DELAY DATA INPUT
R00 – R03 : RECURSION COUNT INPUT
SCK : SERIAL CLOCK
SERI : SERIAL DATA INPUT
SHD : SERIAL DATA TOP
XACK : TEST CLOCK
XADV : 1 LINE ADVANCE CONTROL
XSM : TEST CONTROL
XTCK : TEST CLOCK

OUTPUT

ACHB : ACTIVE-H OUTPUT
CB0 – CB7 : C LINE DATA OUTPUT
CL90, CL91 : COLOR DISPLAY MODE
CMB0 – CMB7 : B LINE DATA OUTPUT
COB0 – COB7 : CONCEALED DATA OUTPUT
F1RE : FIELD DELAY-1 READ ENABLE
F1RR : FIELD DELAY-1 READ RESET
F1WE : FIELD DELAY-1 WRITE ENABLE
F1WR : FIELD DELAY-1 WRITE RESET
F2RE : FIELD DELAY-2 READ ENABLE
F2RR : FIELD DELAY-2 READ RESET
F2WE : FIELD DELAY-2 WRITE ENABLE
F2WR : FIELD DELAY-2 WRITE RESET
FCMB : B LINE FLAG OUTPUT
H1R, H2R : LINE DELAY RESET 1, 2
HGM8 : IDEAL DIRECTION H > M
HGP8 : IDEAL DIRECTION H > P
HGV8 : IDEAL DIRECTION H > V
HNG8 : IDEAL DIRECTION H NO GOOD
LED : LED MONITOR DATA
MGP8 : IDEAL DIRECTION M > P
MNG8 : IDEAL DIRECTION M NO GOOD
PNG8 : IDEAL DIRECTION P NO GOOD
RAB0 – RAB3 : RECURSION COUNT OUTPUT
SEN : SERIAL DATA OUTPUT ENABLE
SERO : SERIAL DATA OUTPUT
VGM8 : IDEAL DIRECTION V > M
VGP8 : IDEAL DIRECTION V > P
VNG8 : IDEAL DIRECTION V NO GOOD

CXD8252Q (SONY) FLAT PACKAGE

C-MOS GATE ARRAY

– TOP VIEW –

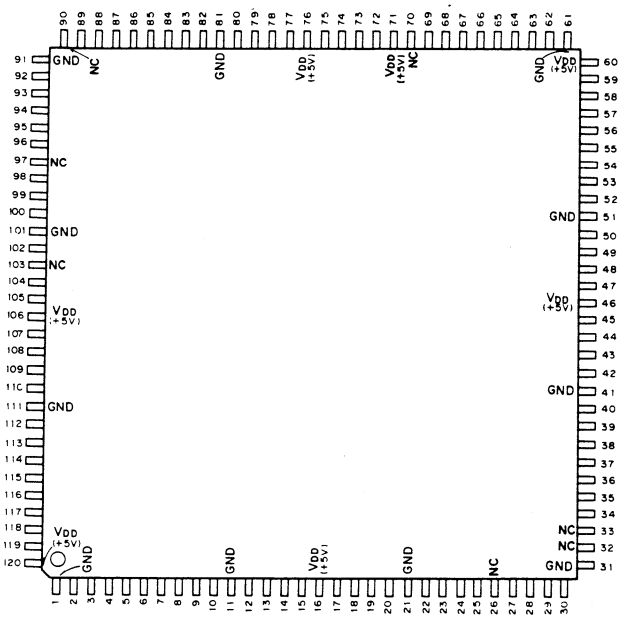

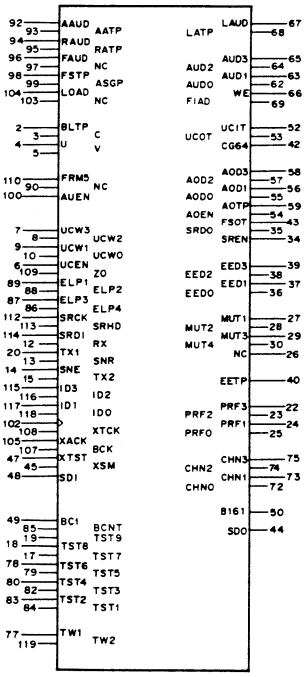

(VDD = + 5V)

PIN No.	I/O	SIGNAL	PIN No.	I/O	SIGNAL	PIN No.	I/O	SIGNAL	PIN No.	I/O	SIGNAL
1	–	GND	31	–	GND	61	–	GND	91	–	GND
2	I	BLTP	32	–	NC	62	I/O	AUD0	92	I	AAUD
3	I	C	33	–	NC	63	I/O	AUD1	93	I	AATP
4	I	U	34	O	SREN	64	I/O	AUD2	94	I	RAUD
5	I	V	35	O	SRDO	65	I/O	AUD3	95	I	RATP
6	I	UCEN	36	O	EED0	66	O	WE	96	I	FAUD
7	I	UCW3	37	O	EED1	67	O	LAUD	97	–	NC
8	I	UCW2	38	O	EED2	68	O	LATP	98	I	FSTP
9	I	UCW1	39	O	EED3	69	O	FIAD	99	I	ASGP
10	I	UCW0	40	O	EETP	70	–	NC	100	I	AUEN
11	–	GND	41	–	GND	71	–	GND	101	–	GND
12	I	RX	42	O	CG64	72	O	CHN0	102	I	CK
13	I	SNR	43	O	FSOT	73	O	CHN1	103	–	NC
14	I	SNE	44	O	SDO	74	O	CHN2	104	I	LOAD
15	I	TX2	45	I	XSM	75	O	CHN3	105	I	XACK
16	–	VDD	46	–	VDD	76	–	VDD	106	–	VDD
17	I	TST7	47	I	XTST	77	I	TW1	107	I	BCK
18	I	TST8	48	I	SDI	78	I	TST6	108	I	XTCK
19	I	TST9	49	I	BC1	79	I	TST5	109	I	Z0
20	I	TX1	50	O	B161	80	I	TST4	110	I	FRM5
21	–	GND	51	–	GND	81	–	GND	111	–	GND
22	O	PRF3	52	O	UCIT	82	I	TST3	112	I	SRCK
23	O	PRF2	53	O	UCOT	83	I	TST2	113	I	SRHD
24	O	PRF1	54	O	AOEN	84	I	TST1	114	I	SRDI
25	O	PRF0	55	O	AOD0	85	I	BCNT	115	I	ID3
26	–	NC	56	O	AOD1	86	I	ELP4	116	I	ID2
27	O	MUT1	57	O	AOD2	87	I	ELP3	117	I	ID1
28	O	MUT2	58	O	AOD3	88	I	ELP2	118	I	ID0
29	O	MUT3	59	O	AOTP	89	I	ELP1	119	I	TW2
30	O	MUT4	60	–	VDD	90	–	NC	120	–	VDD

INPUT

AATP ; AES/EBU DATA TOP
AAUD ; AES/EBU DATA
ASGP ; AUDIO SEGMENT TOP
AUEN ; AUDIO DATA TOP
BC1, BCK ; TEST PINS
BCNT ; B CNT BIT2 SET (NC : 1 SET/GND : 0 SET)
BLTP ; AES/EBU BLOCK TOP
C ; CHANNEL STATUS
ELP1 – ELP4 ; E LAP SET (1CH – 4CH)
FAUD ; FADER DATA
FRM5 ; 5 FRAME TOP
FSTP ; FS TOP
ID0 – ID3 ; IC ID NUMBER
LOAD ; AUDIO DATA (FROM LEVEL COUNTROL IC)
RATP ; RP125 DATA TOP
RAUD ; RP125 DATA
RX ; DATA LATCH PULSE OF SERIAL INTERFACE
SDI ; TEST PIN
SNE ; SIGNATURE ENABLE
SNR ; SIGNATURE RESET
SRCK ; CLOCK FOR SERIAL INTERFACE
SRDI ; SERIAL INTERFACE DATA
SRHD ; SERIAL INTERFACE HEAD
TST1 – TST9,
TW1, TW2 ; TEST PINS
TX1, TX2 ; 1 FRAME TOP
U ; USER DATA
UCEN ; UCW TOP
UCW0 – UCW3 ; USER CONTROL WORDS (BIT0 – BIT3)
V ; VALIDITY DATA
XACK, XSM,
XTCK, XTST ; TEST PINS
Z0 ; TIMING PULSE OF RAM DATA

OUTPUT

AOD0 – AOD3 ; AUDIO DATA (BIT0 – BIT3)
AOEN ; AUDIO DATA ENABLE
AOTP ; AUDIO DATA TOP
B161 ; B CNT BIT1 MONITOR PIN (TEST PIN)
CG64 ; CLOCK GATE OF 64fs
CHN0 – CHN3 ; CHANNEL STATUS MONITOR PIN (TEST PIN)
EED0 – EED3 ; AUDIO E.E. DATA (BIT0 – BIT3)
EETP ; AUDIO E.E. DATA TOP
FIAD ; FADER AUDIO DATA
FSOT ; AUDIO DATA FS TOP
LATP ; LEVECON AUDIO DATA TOP
LAUD ; LEVECON AUDIO DATA
MUT1 – MUT4 ; MUTE SIGNAL OF 1CH – 4CH
PRF0 – PRF3 ; PREF MONITOR PIN (TEST PIN)
SDO ; SCAN OUT (TEST PIN)
SRDO ; SERIAL INTERFACE DATA
SREN ; SERIAL INTERFACE DATA ENABLE
UCIT ; UCW TIMING PULSE
UCOT ; UCW TOP THROUGH
WE ; WRITE ENABLE

INPUT/OUTPUT

AUD0 – AUD3 ; AUDIO DATA (BIT0 – BIT3)

CXD8253BG (SONY)
CXD8253G (SONY)

C-MOS GATE ARRAY
– BOTTOM VIEW –

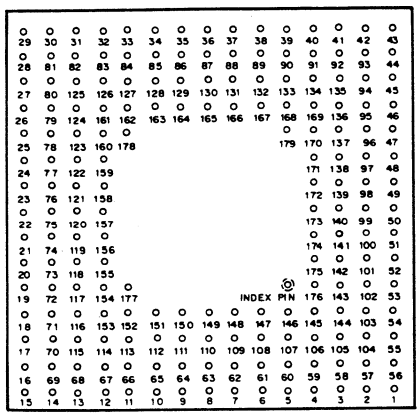

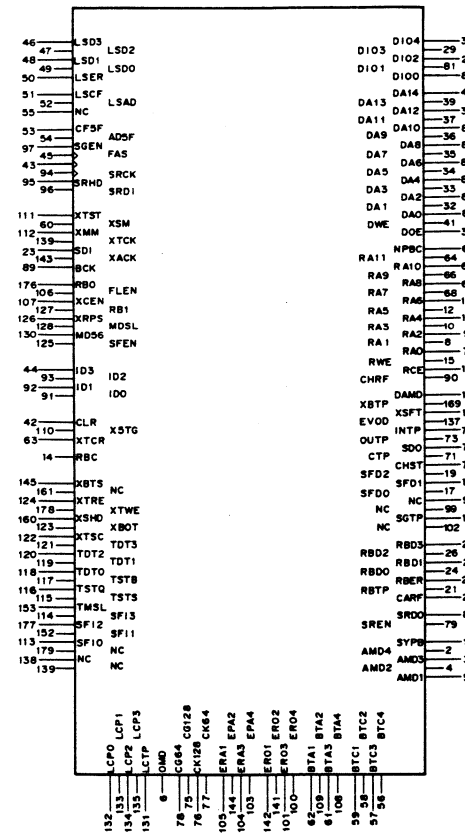

(VDD = + 5V)

PIN No.	I/O	SIGNAL	PIN No.	I/O	SIGNAL	PIN No.	I/O	SIGNAL	PIN No.	I/O	SIGNAL
1	O	SYPB	46	I	LSD3	91	I	ID0	136	O	DAMD
2	O	AMD4	47	I	LSD2	92	I	ID1	137	O	EVOD
3	O	AMD3	48	I	LSD1	93	I	ID2	138	–	NC
4	O	AMD2	49	I	LSD0	94	I	SRCK	139	I	XTCK
5	O	AMD1	50	I	LSER	95	I	SRHD	140	O	SGTP
6	O	OMD	51	I	LSCF	96	I	SRDI	141	O	ERC2
7	O	RA0	52	I	LSAD	97	I	SGEN	142	O	ERC1
8	O	RA1	53	I	CF5F	98	–	NC	143	I	XACK
9	O	RA2	54	I	AD5F	99	–	NC	144	O	ERA2
10	O	RA3	55	–	NC	100	O	ERC4	145	I	XBTS
11	O	RA4	56	O	BTC4	101	O	ERC3	146	–	GND
12	O	RA5	57	O	BTC3	102	–	NC	147	–	GND
13	O	RA6	58	O	BTC2	103	O	ERA4	148	–	VDD
14	I	RBC	59	O	BTC1	104	O	ERA3	149	–	GND
15	O	RWE	60	I	XSM	105	O	ERA1	150	–	VDD
16	O	RCE	61	O	BTA3	106	I	FLEN	151	–	GND
17	O	SFD0	62	O	BTA1	107	I	XCEN	152	I	SFI1
18	O	SFD1	63	I	XTCR	108	O	BTA4	153	I	TMSL
19	O	SFD2	64	O	RA11	109	O	BTA2	154	–	GND
20	O	CARF	65	O	RA10	110	I	XBTG	155	–	GND
21	O	RBTP	66	O	RA9	111	I	XTST	156	–	VDD
22	O	RBER	67	O	RA8	112	I	XMM	157	–	GND
23	I	SDI	68	O	RA7	113	I	SFI0	158	–	VDD
24	O	RBD0	69	O	NRBC	114	I	SFI3	159	–	GND
25	O	RBD1	70	O	CHST	115	I	TSTS	160	I	XSHD
26	O	RBD2	71	O	CTP	116	I	TSTQ	161	–	NC
27	O	RBD3	72	O	SDO	117	I	TSTB	162	–	GND
28	I/O	DIO2	73	O	OUTP	118	I	TDT0	163	–	GND
29	I/O	DIO3	74	O	INTP	119	I	TDT1	164	–	VDD
30	I/O	DIO4	75	O	CG128	120	I	TDT2	165	–	GND
31	O	DOE	76	O	CK128	121	I	TDT3	166	–	VDD
32	O	DA1	77	O	CK64	122	I	XTSC	167	–	GND
33	O	DA3	78	O	CG64	123	I	XBOT	168	I	XSFT
34	O	DA5	79	O	SREN	124	I	XTRE	169	I	XBTP
35	O	DA7	80	O	SRDO	125	I	SFEN	170	–	GND
36	O	DA9	81	I/O	DIO1	126	I	XRPS	171	–	GND
37	O	DA11	82	I/O	DIO0	127	I	RB1	172	–	VDD
38	O	DA12	83	O	DA0	128	I	MDSL	173	–	GND
39	O	DA13	84	O	DA2	129	–	NC	174	–	VDD
40	O	DA14	85	O	DA4	130	I	MD56	175	–	GND
41	O	DWE	86	O	DA6	131	O	LCTP	176	I	RB0
42	I	CLR	87	O	DA8	132	O	LCP0	177	I	SFI2
43	I	CK	88	O	DA10	133	O	LCP1	178	I	XTWE
44	I	ID3	89	I	BCK	134	O	LCP2	179	–	NC
45	I	FAS	90	O	CHRF	135	O	LCP3			

INPUT

AD5F	; ADVANCE 5 FRAME REFERENCE
BCK	; TEST PIN
CF5F	; CONFIDENCE 5 FRAME REFERENCE
CK	; 256fs (12.288MHz) CLOCK
CLR	; ALL RESET (ACTIVE LOW)
FAS	; fs (48KHz)
FLEN	; TEST PIN
ID0 – ID3	; CHIP ID
LSAD	; ADVANCE TOP
LSCF	; CONFIDENCE TOP
LSER	; ERROR FLAG INPUT
LSD0 – LSD3	; DATA INPUT
MD56	; 525/625
RB0, RB1, RBC	; INPUT PORT FROM REBLOCKING MEMORY
SDI, SFEN, SFI0 – SFI3	; TEST PINS
SGEN	; SIGNATURE ENABLE
SRCK	; SERIAL INTERFACE CLOCK
SRDI	; SERIAL INTERFACE DATA INPUT
SRHD	; SERIAL INTERFACE HEADER SIGNAL
TDT0 – TDT3, TMSL, TSTB, TSTQ, TSTS	; TEST PINS
XACK, XBOT, XBTG, XBTP	; TEST PINS
XBTS	; BTS/SONY
XCEN, XMM, XRPS, XSFT, XSHD, XSM, XTCK, XTCR, XTRE, XTSC, XTST, XTWE	; TEST PINS

OUTPUT

AMD1 – AMD4	; BCNT 2ND MSB (CH1 – CH4)
BTA1 – BTA4	; ADVANCE BLOCK TOP (CH1 – CH4)
BTC1 – BTC4	; CONFIDENCE BLOCK TOP (CH1 – CH4)
CARF	; INTERNAL CONFIDENCE/ADVANCE REFERENCE SIGNAL
CG128	; INTERNAL 128fs CLOCK GATE SIGNAL
CK128	; INTERNAL 128fs CLOCK
CG64	; INTERNAL 64fs CLOCK GATE SIGNAL
CK64	; INTERNAL 64fs CLOCK
CHRF, CHST, CTP	; MONITOR PINS
DA0 – DA14	; DATA MEMORY READ/WRITE ADDRESS
DAMD	; MONITOR PIN
DOE	; DATA MEMORY OUTPUT ENABLE
DWE	; DATA MEMORY WRITE ENABLE
ERA1 – ERA4	; ADVANCE CRCC ERROR (CH1 – CH4)
ERC1 – ERC4	; CONFIDENCE CRCC ERROR (CH1 – CH4)
EVOD	; INTERNAL EVEN/ODD SIGNAL (CONFI/ADV MULTIPLEXED)
INTP	; INTERNAL INNER TOP SIGNAL (CONFI/ADV MULTIPLEXED)
LCTP	; LNGH. CHAN. PREN MULTIPLETED AND TOP SIGNAL
LCP0 – LCP3	; LNGH. CHAN. PREN MULTIPLETED OUTPUT
NRBC	; OUTPUT PART FOR REBLOCKING MEMORY
OMD	; MONITOR PIN
OUTP	; INTERNAL OUTER TOP SIGNAL (CONFI/ADV MULTIPLEXED)
RA0 – RA11	; REBLOCKING MEMORY READ/WRITE ADDRESS
RBD0 – RBD3	; DATA OUTPUT
RBER	; ERROR FLAG OUTPUT
RBTP	; DATA TOP SIGNAL
RCE	; REBLOCKING MEMORY CHIP ENABLE
RWE	; REBLOCKING MEMORY WRITE ENABLE
SDO, SFD0, SFD1	; MONITOR PINS
SGTP	; INTERNAL SEGMENT TOP SIGNAL (CONFI/ADV MULTIPLEXED)
SRDO	; SERIAL I/F DATA OUTPUT
SREN	; SERIAL I/F OUTPUT REQUEST
SYPB	; SYNC/ASYNC

INPUT/OUTPUT

DIO0 – DIO4	; I/O PORT FOR DATA MEMORY

CXD8273Q (SONY) FLAT PACKAGE

C-MOS GATE ARRAY

– TOP VIEW –

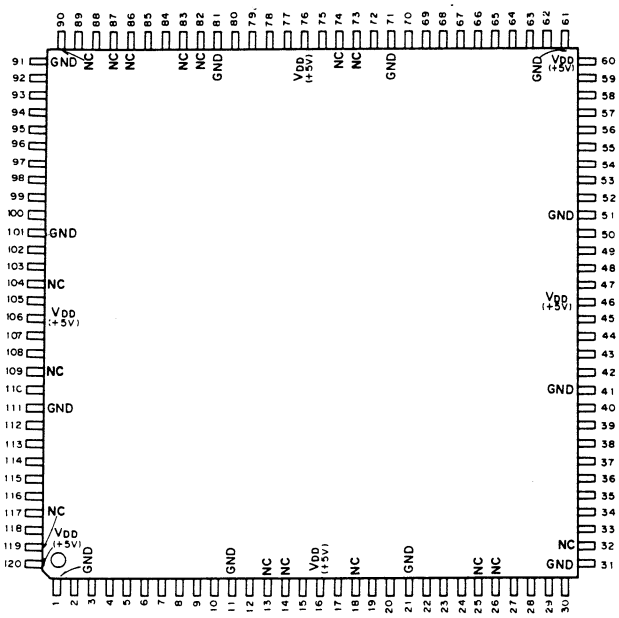

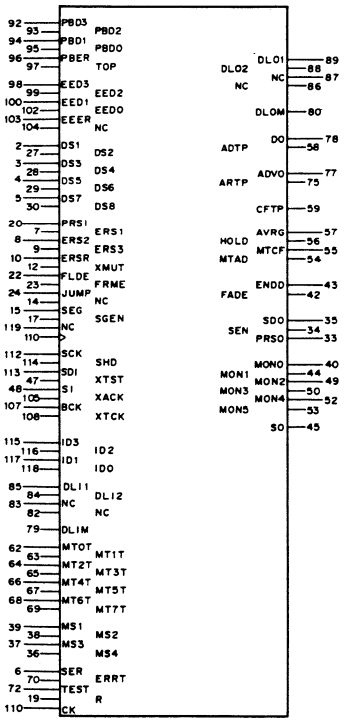

(VDD = + 5V)

PIN No.	I/O	SIGNAL	PIN No.	I/O	SIGNAL	PIN No.	I/O	SIGNAL	PIN No.	I/O	SIGNAL
1	–	GND	31	–	GND	61	–	GND	91	–	GND
2	I	DS1	32	–	NC	62	I	MT0T	92	I	PBD3
3	I	DS3	33	O	PRSO	63	I	MT1T	93	I	PBD2
4	I	DS5	34	O	SEN	64	I	MT2T	94	I	PBD1
5	I	DS7	35	O	SDO	65	I	MT3T	95	I	PBD0
6	I	SER	36	I	MS4	66	I	MT4T	96	I	PBER
7	I	ERS1	37	I	MS3	67	I	MT5T	97	I	TOP
8	I	ERS2	38	I	MS2	68	I	MT6T	98	I	EED3
9	I	ERS3	39	I	MS1	69	I	MT7T	99	I	EED2
10	I	ERSR	40	O	MON0	70	I	ERRT	100	I	EED1
11	–	GND	41	–	GND	71	–	GND	101	–	GND
12	I	XMUT	42	O	FADE	72	I	TEST	102	I	EED0
13	–	NC	43	O	ENDD	73	–	NC	103	I	EEER
14	–	NC	44	O	MON1	74	–	NC	104	–	NC
15	I	SEG	45	O	SO	75	O	ARTP	105	I	XACK
16	–	VDD	46	–	VDD	76	–	VDD	106	–	VDD
17	I	SGEN	47	I	XTST	77	O	ADVO	107	I	BCK
18	–	NC	48	I	SI	78	O	DO	108	I	XTCK
19	I	R	49	O	MON2	79	I	DLIM	109	–	NC
20	I	PRSI	50	O	MON3	80	O	DLOM	110	I	CK
21	–	GND	51	–	GND	81	–	GND	111	–	GND
22	I	FLDE	52	O	MON4	82	–	NC	112	I	SCK
23	I	FRME	53	O	MON5	83	–	NC	113	I	SDI
24	I	JUMP	54	O	MTAD	84	I	DLI2	114	I	SHD
25	–	NC	55	O	MTCF	85	I	DLI1	115	I	ID3
26	–	NC	56	O	HOLD	86	–	NC	116	I	ID2
27	I	DS2	57	O	AVRG	87	–	NC	117	I	ID1
28	I	DS4	58	O	ADTP	88	O	DLO2	118	I	ID0
29	I	DS6	59	O	CFTP	89	O	DLO1	119	–	NC
30	I	DS8	60	–	VDD	90	–	NC	120	–	VDD

INPUT

BCK	: TEST PIN
CK	: CLOCK PULSE (12.288MHz)
DLI1, DLI2	: CONNECTED TO EXTERNAL MEMORY
DLIM	: CONNECTED TO EXTERNAL MEMORY
DS1 – DS8	: DATA SELECT
EED0 – EED3	: AUDIO EE DATA
EEER	: ERROR FLAG FOR AUDIO EE DATA
ERRT	: TEST PIN
ERS1 – ERS3	: MUTE PULSE
ERSR	: MUTE PULSE
FLDE	: FIELD END PULSE
FRME	: FRAME END PULSE
ID0 – ID3	: DEVICE NUMBER FOR SERIAL INTERFACE
JUMP	: SAMPLE HOLD PULSE FOR FIELD/FRAME END DATA
MS1 – MS4, MT0T – MT7T	: TEST PINS
PBD0 – PBD3	: RE-BLOCKED AUDIO DATA
PBER	: ERROR FLAG FOR RE-BLOCKED AUDIO DATA
PRSI	: POWER-ON-RESET PULSE
R	: TEST PIN
SCK	: CLOCK PULSE FOR SERIAL INTERFACE
SDI	: SERIAL DATA
SEG	: PERIODIC PULSE FOR ERROR COUNTER (5 FRAME PULSE)
SGEN	: ENABLE PULSE FOR SIGNATURE CALCULATOR
SHD, SI	: TEST PINS
TEST	: TEST PIN
XACK, XBCK, XTST	: TEST PINS

OUTPUT

ADTP	: TOP SIGNAL FOR 2ND CHANNEL OF OUTPUT DATA
ADVO	: ADVANCE RETURN DATA
ARTP	: TOP SIGNAL FOR OUTPUT DATA (SAME AS CFTP)
AVRG	: LED DRIVE
CFTP	: TOP SIGNAL FOR OUTPUT DATA (SAME AS ARTP)
DLO1, DLO2	: CONNECTED TO EXTERNAL MEMORY
DLOM	: CONNECTED TO EXTERNAL MEMORY
DO	: OUTPUT DATA
ENDD	: HOLDED FIELD/FRAME END DATA
FADE	: HOLD SIGNAL OF FIELD/FRAME END DATA
HOLD	: LED DRIVE
MON0 – MON5	: TEST PIN
MTAD	: LED DRIVE
MTCF	: LED DRIVE
PRSO	: POWER-ON-RESET PULSE
SDO	: OUTPUT SERIAL DATA
SEN	: ENABLE PULSE FOR SDO
SO	: TEST PIN

CXD8280Q (SONY) FLAT PACKAGE

C-MOS DIGITAL AUDIO TIME BASE EXPANSION FOR SIF RECEIVER
– TOP VIEW –

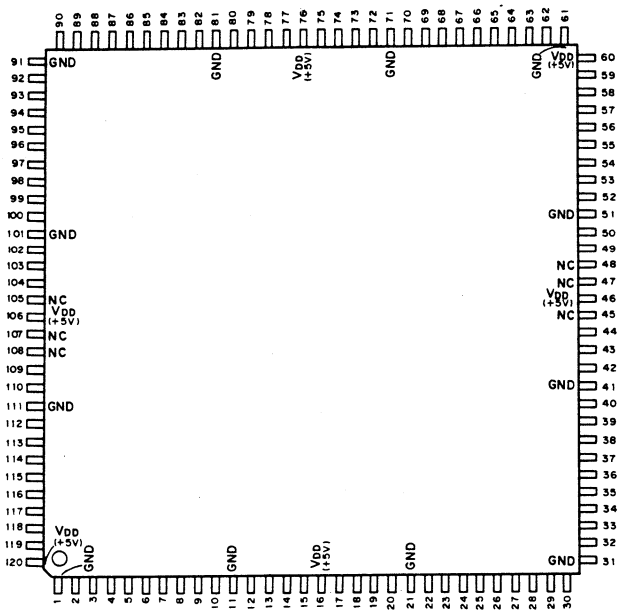

(VDD = + 5V)

PIN No.	I/O	SIGNAL	PIN No.	I/O	SIGNAL	PIN No.	I/O	SIGNAL	PIN No.	I/O	SIGNAL
1	–	GND	31	–	GND	61	–	GND	91	–	GND
2	IU	IT1	32	OT	C3/4	62	IU	OECRD	92	IU	AUX0 (LSB)
3	IU	CLR	33	OT	C1/2	63	IU	CRA0 (LSB)	93	IU	AUX1
4	OT	DLY5 (MSB)	34	OT	U3/4	64	IU	CRA1	94	IU	AUX2
5	OT	DLY4	35	OT	U1/2	65	IU	CRA2	95	IU	AUX3
6	OT	DLY3	36	OT	V3/4	66	IU	CRA3	96	IU	AUX4
7	OT	DLY2	37	OT	V1/2	67	IU	CRA4	97	IU	AUX5
8	OT	DLY1	38	OT	AD3/4	68	IU	CRA5	98	IU	AUX6
9	OT	DLY0 (LSB)	39	OT	AD1/2	69	IU	CRA6 (MSB)	99	IU	AUX7
10	IU	OEDLY	40	ID	OEAD	70	IU	CREN	100	IU	AUX8
11	–	GND	41	–	GND	71	–	GND	101	–	GND
12	IU	IT2	42	ID	BCK	72	O	ERR1	102	IU	AUX9 (MSB)
13	IU	IT3	43	IU	LRCK	73	O	ERR2	103	IU	ADFT
14	IU	IT4	44	O	OT2	74	O	ERR3	104	IU	10/9
15	IU	IT5	45	–	NC	75	O	ERR4	105	–	NC
16	–	VDD	46	–	VDD	76	–	VDD	106	–	VDD
17	IU	MUTE4	47	–	NC	77	O	EXT1	107	–	NC
18	IU	MUTE3	48	–	NC	78	O	EXT2	108	–	NC
19	IU	MUTE2	49	IU	IT6	79	O	EXT3	109	IU	TRS
20	IU	MUTE1	50	IU	CRCK	80	O	EXT4	110	ID	VCK
21	–	GND	51	–	GND	81	–	GND	111	–	GND
22	IU	CHEX1	52	OT	CRD7 (MSB)	82	OT	DIDPER	112	IU	D2/D1
23	IU	CHEX0	53	OT	CRD6	83	OT	DIDERR	113	IU	DID1
24	IU	AFS	54	OT	CRD5	84	OT	DBNPER	114	IU	DID0
25	IU	LRS	55	OT	CRD4	85	OT	DBNERR	115	IU	ERDB
26	IU	DIR	56	OT	CRD3	86	OT	DCPER	116	IU	IT7
27	IU	20/16	57	OT	CRD2	87	OT	DCERR	117	IU	IT8
28	O	OT1	58	OT	CRD1	88	OT	UDPER	118	O	OT3
29	OT	Z3/4	59	OT	CRD0 (LSB)	89	OT	CSERR	119	O	WRDL
30	OT	Z1/2	60	OT	VDD	90	IU	OEERR	120	–	VDD

IU ; INPUT WITH PULL-UP REGISTER
ID ; INPUT WITH PULL-DOWN REGISTER
OT ; TRI-STATE OUTPUT

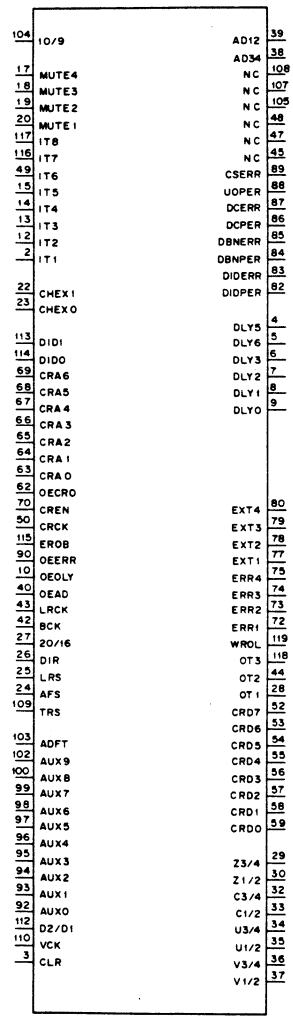

INPUT (WITH PULL-DOWN REGISTER)

BCK	; DIGITAL AUDIO BIT CLOCK (= 64 × Fs)
OEAD	; OUTPUT ENABLE FOR PIN 29-39 (L)
VCK	; VIDEO CLOCK (= 4Fsc)

INPUT (WITH PULL-UP REGISTER)

10/9	; INPUT AUX. DATA 10BIT/9BIT MODE SELECT
20/16	; DIGITAL AUDIO 20BIT/16BIT SELECT
ADFT	; AUX. DATA FLAG TIMING
AFS	; DIGITAL AUDIO FORMAT SELECT
CHEX1	; CHANNEL EXCHANGE 1
AUX0 – AUX9	; AUX. DATA0 – 9
CHEX0,1	; CHANNEL EXCHANGE 0,1
CLR	; POWER ON CLEAR (L)
CRA0 – CRA6	; CHANNEL STATUS READ ADDRESS0 – 6
CRCK	; CHANNEL STATUS READ ADDRESS WRITE CLOCK
CREN	; CHANNEL STATUS READ ADDRESS WRITE ENABLE (L)
D2/D1	; VIDEO FORMAT D2/D1 SELECT
DID0,1	; DATA ID BIT0,1
DIR	; DIGITAL AUDIO MSB FIRST/LSB FIRST SELECT
ERDB	; ERROR OVERRIDE FOR CIRCUIT DEBUG
IT1 – 8	; TEST (L)
LRCK	; DIGITAL AUDIO L/R CLOCK (= Fs)
LRS	; DIGITAL AUDIO LEFT/RIGHT BIT POSITION SELECT
MUTE1 – MUTE4	; DIGITAL AUDIO CH1 – CH4 MUTE (L)
OECRD	; OUTPUT ENABLE FOR CRD0-7
OEDLY	; OUTPUT ENABLE FOR DLY0-5 (L)
OEERR	; OUTPUT ENABLE FOR PIN82-89
TRS	; VIDEO H-SYNC

OUTPUT

ERR1 – ERR4	; DIGITAL AUDIO CH1 – CH4 ERROR (L)
EXT1 – EXT4	; DIGITAL AUDIO CH1 – CH4 EXIST
OT1	; TEST (MEMORY READ)
OT2	; TEST (READ CLEAR)
OT3	; TEST (MEMORY WRITE)
WRDL	; TEST (WRITE/READ DELAY)

OUTPUT (TRI-STATE)

AD1/2	; DIGITAL AUDIO CH-1/2 DATA
AD3/4	; DIGITAL AUDIO CH-3/4 DATA
C1/2	; DIGITAL AUDIO CH-1/2 CHANNEL STATUS BIT
C3/4	; DIGITAL AUDIO CH-3/4 CHANNEL STATUS BIT
CRD0 – CRD7	; CHANNEL STATUS READ DATA0 – 7
CSERR	; CHECK SUM ERROR (L)
DBNERR	; DBN UNCONTINUITY ERROR (L)
DBNPER	; DBN PARITY ERROR (L)
DCERR	; DC UNMATCH ERROR (L)
DCPER	; DC PARITY ERROR (L)
DIDERR	; DID UNMATCH ERROR (L)
DIDPER	; DID PARITY ERROR (L)
DLY0 – DLY5	; SAMPLE DELAY INDICATOR BIT0 – 5
U1/2	; DIGITAL AUDIO CH-1/2 USER DATA BIT
U3/4	; DIGITAL AUDIO CH-3/4 USER DATA BIT
UDPER	; UD PARITY ERROR (L)
V1/2	; DIGITAL AUDIO CH-1/2 VALIDITY FLAG
V3/4	; DIGITAL AUDIO CH-3/4 VALIDITY FLAG
Z1/2	; DIGITAL AUDIO CH-1/2 BLOCK SYNC (Z-FLAG)
Z3/4	; DIGITAL AUDIO CH-3/4 BLOCK SYNC (Z-FLAG)

CXD8281Q (SONY) FLAT PACKAGE

C-MOS DIGITAL AUDIO TIME BASE COMPRESSION FOR SIF TRANSMITER
– TOP VIEW –

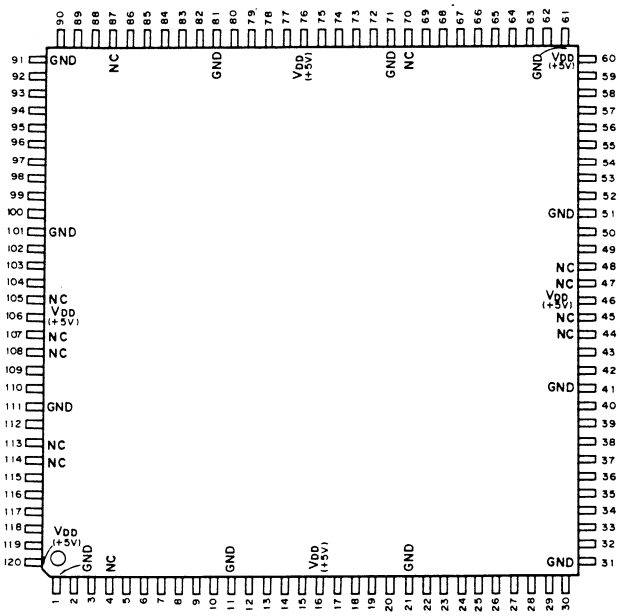

INPUT (WITH PULL-DOWN REGISTER)

128CK	: DIGITAL AUDIO 128 × Fs CLOCK
AD1/2	: DIGITAL AUDIO CH-1/2 DATA
AD3/4	: DIGITAL AUDIO CH-3/4 DATA
BCK	: DIGITAL AUDIO BIT CLOCK (= 64 × Fs)
C1/2	: DIGITAL AUDIO CH-1/2 CHANNEL STATUS BIT
C3/4	: DIGITAL AUDIO CH-3/4 CHANNEL STATUS BIT
OEAUX	: OUTPUT ENABLE FOR AUX0-9 (L)
U1/2	: DIGITAL AUDIO CH-1/2 USER DATA BIT
U3/4	: DIGITAL AUDIO CH-3/4 USER DATA BIT
V1/2	: DIGITAL AUDIO CH-1/2 VALIDITY FLAG
V3/4	: DIGITAL AUDIO CH-3/4 VALIDITY FLAG
VCK	: VIDEO CLOCK (= 4Fsc) INPUT
Z1/2	: DIGITAL AUDIO CH-1/2 BLOCK SYNC (Z-FLAG)
Z3/4	: DIGITAL AUDIO CH-3/4 BLOCK SYNC (Z-FLAG)

INPUT (WITH PULL-UP REGISTER)

20/16	: DIGITAL AUDIO 20BIT/16BIT SELECT
AFS	: DIGITAL AUDIO FORMAT SELECT
CHEX0,1	: CHANNEL EXCHANGE 0,1
CHS1 – CHS4	: AUDIO CH1 – CH4 OUTPUT SELECT (L)
CLR	: POWER ON CLEAR (L)
CWA0 – CWA3	: CHANNEL STATUS REGISTER WRITE ADDRESS 0 – 3
CWCK	: CHANNEL STATUS REGISTER WRITE CLOCK
CWD0 – CWD7	: CHANNEL STATUS REGISTER WRITE DATA 0 – 7
CWEN	: CHANNEL STATUS REGISTER WRITE ENABLE
D2/D1	: VIDEO FORMAT D2/D1 SELECT
DID0,1	: DATA ID BIT0,1
DIR	: DIGITAL AUDIO MSB FIRST/LSB FIRST SELECT
DLY0 – DLY4	: DELAY CONTROL BIT0 – BIT3
IT1 – IT5	: TEST (L)
LIM0,1	: LINE MODE 0,1
LRCK	: DIGITAL AUDIO L/R CLOCK (= Fs)
LRS	: DIGITAL AUDIO LEFT/RIGHT BIT POSITION SELECT
SYNC	: VIDEO SYNC INPUT
ZCS	: DIGITAL AUDIO Z-FLAG C-BIT SELECT

OUTPUT

ADBT	: AUX. DATA BLOCK TIMING
ADFT	: AUX. DATA FLAG TIMING
AUXT	: AUX. DATA TIMING
OT1 – OT19	: TEST
UDT	: USER DATA TIMING

OUTPUT (TRI-STATE)

AUX0 – AUX9 : AUX. DATA 0 – 9

(VDD = + 5V)

PIN No.	I/O	SIGNAL	PIN No.	I/O	SIGNAL	PIN No.	I/O	SIGNAL	PIN No.	I/O	SIGNAL
1	–	VSS	31	–	GND	61	–	GND	91	–	GND
2	IU	IT1	32	ID	C3/4	62	IU	CWA0 (LSB)	92	OT	AUX0 (LSB)
3	IU	CLR	33	ID	C1/2	63	IU	CWA1	93	OT	AUX1
4	–	NC	34	ID	U3/4	64	IU	CWA2	94	OT	AUX2
5	O	OT1	35	ID	U1/2	65	IU	CWA3 (MSB)	95	OT	AUX3
6	O	OT2	36	ID	V3/4	66	IU	CWEN	96	OT	AUX4
7	O	OT3	37	ID	V1/2	67	IU	IT3	97	OT	AUX5
8	O	OT4	38	ID	AD3/4	68	IU	IT4	98	OT	AUX6
9	O	OT5	39	ID	AD1/2	69	IU	IT5	99	OT	AUX7
10	O	OT6	40	ID	BCK	70	–	NC	100	OT	AUX8
11	–	GND	41	–	GND	71	–	GND	101	–	GND
12	O	OT7	42	ID	128CK	72	IU	DID0	102	OT	AUX9 (MSB)
13	O	OT8	43	IU	LRCK	73	IU	DID1	103	O	ADBT
14	O	OT9	44	–	NC	74	IU	LIM0	104	ID	OEAUX
15	O	OT10	45	–	NC	75	IU	LIM1	105	–	NC
16	–	VDD	46	–	VDD	76	–	VDD	106	–	VDD
17	O	OT11	47	–	NC	77	IU	CHS1	107	–	NC
18	O	OT12	48	–	NC	78	IU	CHS2	108	–	NC
19	O	OT13	49	IU	IT2	79	IU	CHS3	109	IU	SYNC
20	O	OT14	50	IU	CWCK	80	IU	CHS4	110	ID	VCK
21	–	GND	51	–	GND	81	–	GND	111	–	GND
22	IU	CHEX1	52	IU	CWD7 (MSB)	82	IU	DLY0 (LSB)	112	IU	D2/D1
23	IU	CHEX0	53	IU	CWD6	83	IU	DLY1	113	–	NC
24	IU	AFS	54	IU	CWD5	84	IU	DLY2	114	–	NC
25	IU	LRS	55	IU	CWD4	85	IU	DLY3	115	O	OT15
26	IU	DIR	56	IU	CWD3	86	IU	DLY4 (MSB)	116	O	OT16
27	IU	20/16	57	IU	CWD2	87	–	NC	117	O	OT17
28	IU	ZCS	58	IU	CWD1	88	O	AUXT	118	O	OT18
29	ID	Z3/4	59	IU	CWD0 (LSB)	89	O	UDT	119	O	OT19
30	ID	Z1/2	60	–	VDD	90	O	ADFT	120	–	VDD

IU : INPUT WITH PULL-UP REGISTER
ID : INPUT WITH PULL-DOWN REGISTER
OT : TRI-STATE OUTPUT

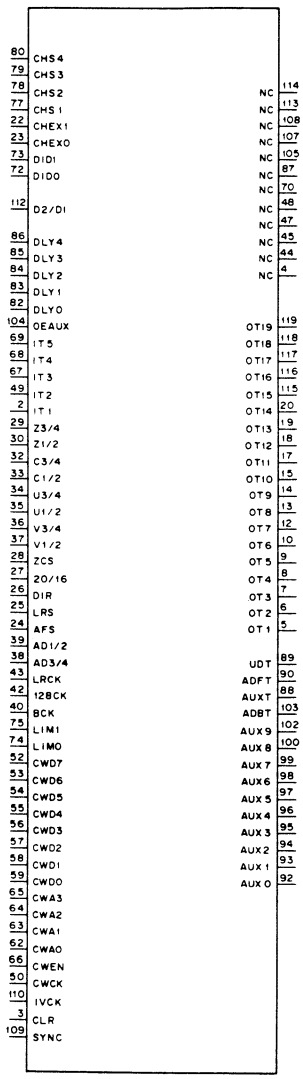

CXD8305G (SONY)

C-MOS AES/EBU DIGITAL AUDIO INTERFACE
– TOP VIEW –

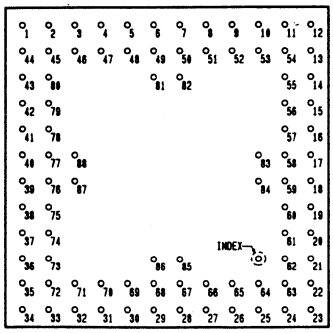

(VDD = + 5V)

PIN No.	I/O	SIGNAL	PIN No.	I/O	SIGNAL	PIN No.	I/O	SIGNAL	PIN No.	I/O	SIGNAL
1	O	LER2	23	I	$\overline{RD}$	45	O	PER2	67	I/O	C9
2	O	SER1	24	I/O	C0	46	O	CERL2	68	I/O	C11
3	O	SER2	25	I/O	C7	47	I/O	SM	69	I	RCK
4	O	CERL1	26	I/O	C2	48	I	$\overline{CEROE1}$	70	I	WCK
5	O	CB2	27	I/O	C4	49	I	BCIN2	71	I	WA1
6	I/O	C1	28	I/O	C8	50	I/O	C	72	I	$\overline{CEROE2}$
7	O	P	29	I/O	C10	51	I/O	V	73	I	XRST
8	I/O	U	30	I	$\overline{OE}$	52	I/O	A1	74	I	IN2
9	I/O	A0 (LSB)	31	I	FS	53	I/O	A3	75	O	CERR1
10	I/O	A2	32	I	WA0	54	I/O	A5	76	O	OUT1
11	I/O	A4	33	I	RSM	55	I/O	A7	77	O	OUT2
12	–	GND	34	–	GND	56	I/O	A9	78	I	TST1
13	I/O	A6	35	I	MCK	57	I/O	A11	79	O	CERR2
14	I/O	A8	36	I	CRCE	58	I/O	A13	80	O	PER1
15	I/O	A10	37	I	IN1	59	I/O	A15	81	–	GND
16	I/O	A12	38	I	TST3	60	I/O	A17	82	–	VDD
17	I/O	A14	39	I	CSEL	61	I/O	A19 (MSB)	83	–	VDD
18	I/O	A16	40	I	TST2	62	I	AD0	84	–	GND
19	I/O	A18	41	I	BCIN1	63	I	AD1	85	–	GND
20	O	CB1	42	O	WCK1	64	I/O	C6	86	–	VDD
21	I	$\overline{CS}$	43	O	WCK2	65	I/O	C3	87	–	VDD
22	I	$\overline{WR}$	44	O	LER1	66	I/O	C5	88	–	GND

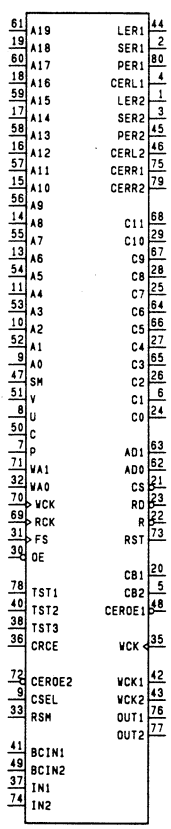

INPUT

AD0, 1 ; CHANNEL SELECT BIT0, 1 OF TERMINAL C0 – C11
AD0→H : RIGHT (IN) L : LEFT (OUT)
AD1→H : OUT1, IN1 L : OUT2, IN2
BCIN1, 2 ; BUFFER LATCH CLOCK INPUT OF AES/EBU DECODER (CH-1/CH-2)
CEROE1, 2; 3 STATE CONTROL (LER1, SER1, PER1, CERL1, CERR1)
L : ENABLE, PULL DOWN
CRCE ; CHANNEL STATUS BIT CRCC ENCODER/DECODER MODE
H : NORMAL
CS ; READ/WRITE ENABLE OF TERMINAL C0 – C11
L : ENABLE
CSEL ; CHANNEL STATUS BIT INPUT SELECT
H : TERMINAL C L : TERMINAL C0 – C11
FS ; WORD CLOCK INPUT OF AES/EBU ENCODER
IN1, 2 ; AES/EBU FORMAT DIGITAL AUDIO SIGNAL INPUT CH-1/CH-2
MCK ; MASTER CLOCK 384Fs (SHOULD LOCK TO FS INIPUT)
OE ; OUTPUT ENABLE OF TERMINAL A0 – A19, V, U, C, P, SM
L : ENABLE
RCK ; OUTPUT LATCH CLOCK INPUT OF AES/EBU DECODER
RD ; READ ENABLE OF TERMINAL C0 – C11 L : ENABLE
RSM ; CHANNEL STATUS BIT CRCC ENCODER/DECODER MODE
L : NORMAL
TST1 – 3 ; TERMINAL FOR TEST H : NORMAL
WA0, 1 ; CHANNEL SELECT BIT0, 1 OF TERMINAL A0 – A19, V, U, C, P, SM
WA0→H : RIGHT (IN) L : LEFT (OUT)
WA1→H : OUT1, IN1 L : OUT2, IN2
WCK ; WRITE CLOCK INPUT OF AUDIO DATA INTO AES/EBU ENCODER
WR ; WRITE ENABLE OF TERMINAL C0 – C11 L : ENABLE
XRST ; TERMINAL FOR TEST H : NORMAL

OUTPUT

CB1, 2 ; TERMINAL FOR TEST NORMAL OPEN
CERL1, 2 ; CHANNEL STATUS BIT (SUB FRAME-A) CRCC ERROR OF CH-1/CH-2 INPUT, 3 STATE
H : CRCC ERROR
CERR1, 2 ; CHANNEL STATUS BIT (SUB FRAME-B) CRCC ERROR OF CH-1/CH-2 INPUT, 3 STATE
H : CRCC ERROR
LER1, 2 ; LINE ERROR OF CH-1/CH-2 INPUT, 3 STATE
H : NO CARRIER INPUT
OUT1, 2 ; AES/EBU FORMAT DIGITAL AUDIO SIGNAL OUTPUT CH-1, CH-2
PER1, 2 ; PARITY ERROR OF CH-1/CH-2 INPUT, 3 STATE
H : INCONSISTENT PARITY BIT
SER1, 2 ; SYNC ERROR OF CH-1/CH-2 INPUT, 3 STATE
H : SYNC PATTERN IS NOT CONTINUOUS
WCK1, 2 ; WORD CLOCK OUTPUT DETECTED BY AES/EBU DECODER OF CH-1/CH-2

INPUT/OUTPUT

A0 – A19 ; DECODER OUTPUT OR ENCODER INPUT OF AUDIO DATA
C ; DECODER OUTPUT OR ENCODER INPUT OF CHANNEL STATUS BIT
C0 – C11 ; DECODER/EMCODER I/O OF CHANNEL STATUS BIT OF BYTE
P ; DECODER OUTPUT OR ENCODER INPUT OF PARITY BIT
SM ; DECODER OUTPUT OR ENCODER INPUT OF SYNC MARK
U ; DECODER OUTPUT OR ENCODER INPUT OF USER'S BIT
V ; DECODER OUTPUT OR ENCODER INPUT OF VALIDITY FLAG

ENCODE MODE

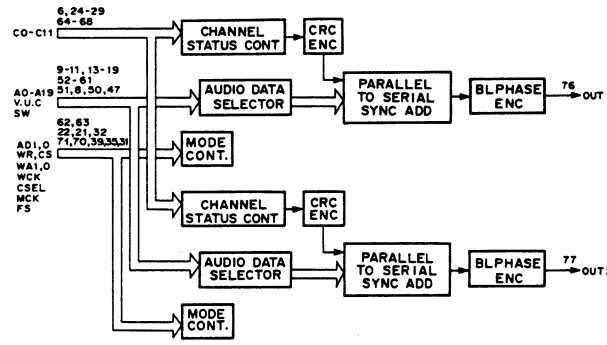

DECODE MODE

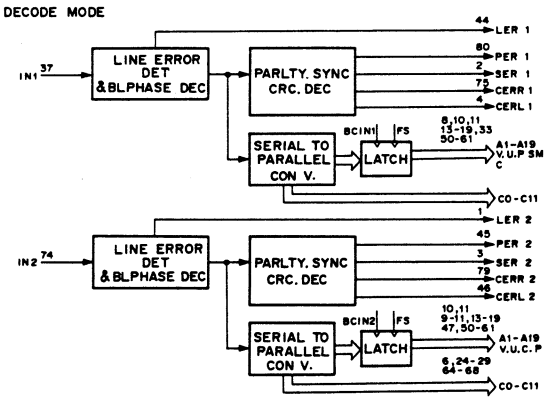

CXK51256P-55 (SONY)

C-MOS 256K (262,144x1)- BIT STATIC RAM

– TOP VIEW –

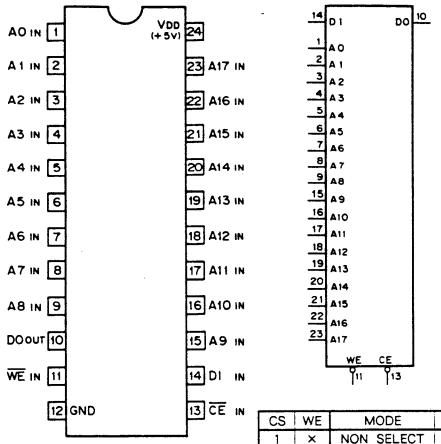

CS	WE	MODE	DO
1	×	NON SELECT	HI-Z
0	0	WRITE	HI-Z
0	1	READ	D OUT

A0 – A17 : ADDRESS INPUTS
CE : CHIP ENABLE INPUT
DI : DATA INPUT
DO : DATA OUTPUT
WE : WRITE ENABLE INPUT

0 : LOW LEVEL
1 : HIGH LEVEL
× : DON'T CARE
HI-Z : HIGH INPEDANCE

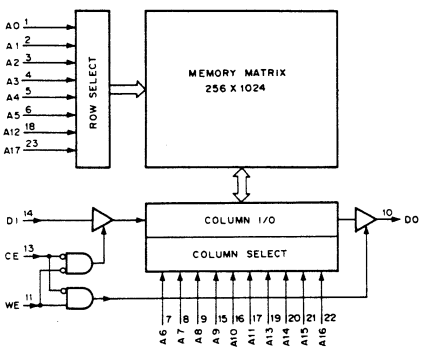

CXK5464AP-25 (SONY)

CXK5464AP-35 (SONY)

C-MOS 64K (16,384x4)-BIT STATIC RAM

– TOP VIEW –

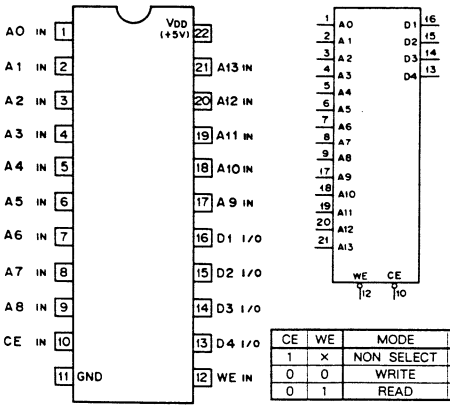

CE	WE	MODE	D1 – D4
1	×	NON SELECT	HI-Z
0	0	WRITE	INPUT
0	1	READ	OUTPUT

0 : LOW LEVEL
1 : HIGH LEVEL
× : DON'T CARE

A0 – A13 : ADDRESS INPUTS
CE : CHIP ENABLE INPUT
D1 – D4 : DATA INPUTS/OUTPUTS
WE : WRITE ENABLE INPUT

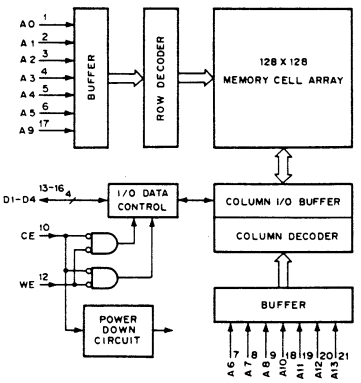

CXK581001M-70L (SONY) FLAT PACKAGE

C-MOS 1M (131072x8)-BIT STATIC RAM

– TOP VIEW –

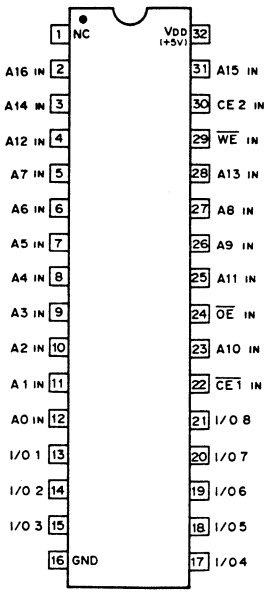

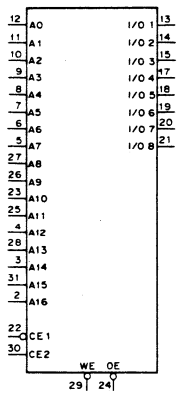

A0 – A16 ; ADDRESS INPUTS
I/O1 – I/O8 ; DATA INPUTS/OUTPUTS
CE1, CE2 ; CHIP ENABLE INPUTS
WE ; WRITE ENABLE INPUT
OE ; OUTPUT ENABLE INPUT

CE1	CE2	OE	WE	MODE
1	X	X	X	STANDBY
X	0	X	X	
0	1	1	1	DISABLE
0	1	0	1	READ
0	1	X	0	WRITE

0 ; LOW LEVEL
1 ; HIGH LEVEL
X ; DON'T CARE

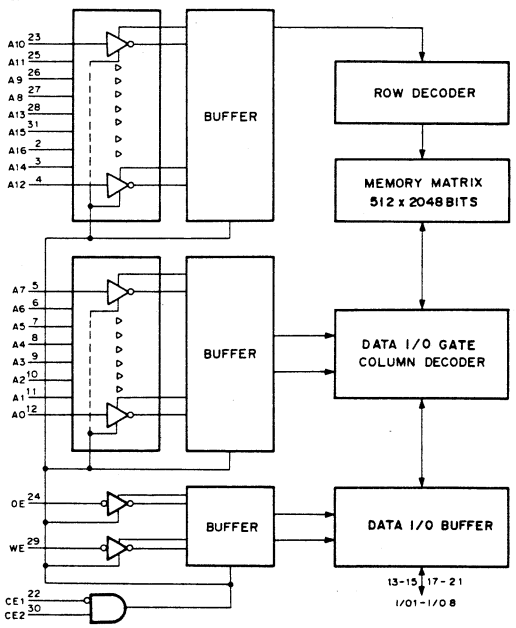

CXK58257ASP-10L (SONY)
CXK58257ASP-70LL (SONY)
CXK58257M-70LL (SONY) FLAT PACKAGE
CXK58257SP-10L (SONY)
CXK58257SP-70LL (SONY)
MS62256CLL-70NC (MOSEL)

C-MOS 256K (32768x8)-BIT STATIC RAM

– TOP VIEW –

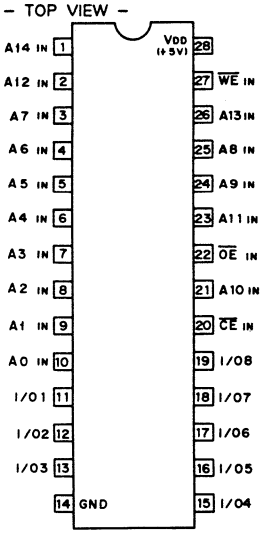

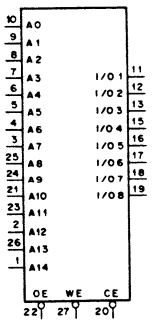

A0 – A14 ; ADDRESS INPUTS
CE ; CHIP ENABLE INPUT
I/O1 – I/O8 ; DATA INPUTS/OUTPUTS
OE ; OUTPUT ENABLE INPUT
WE ; WRITE ENABLE INPUT

CE	OE	WE	MODE	I/O TERMINAL
1	×	×	NOT SELECT	HIGH IMPEDANCE
0	1	1	OUTPUT DISABLE	HIGH IMPEDANCE
0	0	1	READ	OUTPUT DATA
0	×	0	WRITE	INPUT DATA

0 ; LOW LEVEL
1 ; HIGH LEVEL
× ; DON'T CARE

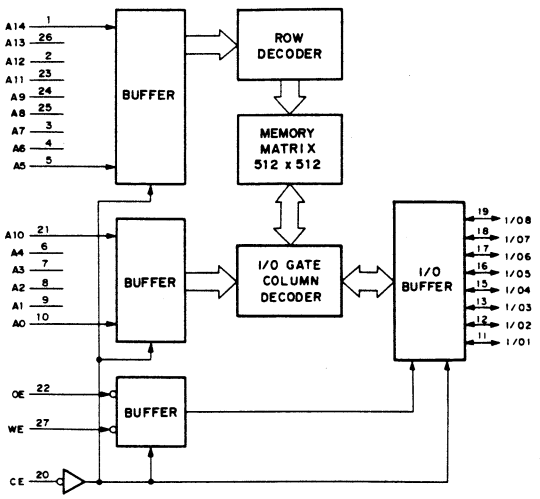

CXK58258SP-45 (SONY) (ACCESS TIME = 45nS)

C-MOS 256K (32768x8)-BIT STATIC RAM

– TOP VIEW –

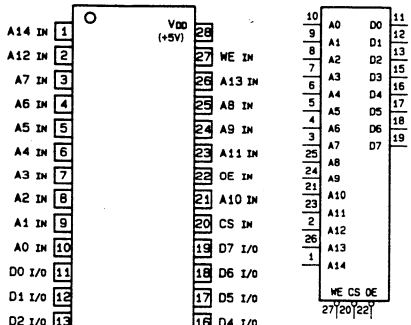

A0–A14: ADDRESS INPUTS
D0–D7: DATA INPUTS/OUTPUTS
CS: CHIP SELECT INPUT
OE: OUTPUT ENABLE INPUT
WE: WRITE ENABLE INPUT

CS	OE	WE	OUTPUTS	FUNCTION
1	X	X	HI-Z	NO SELECTION
0	1	1	HI-Z	OUTPUT DISABLE
0	0	1	DOUT	READ
0	X	0	DIN	WRITE

0: LOW LEVEL
1: HIGH LEVEL
X: DON'T CARE
HI-Z: HIGH IMPEDANCE

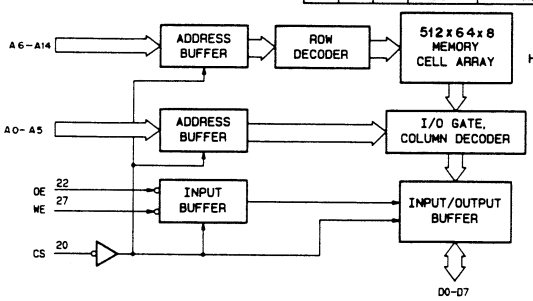

CXK5863P-35 (SONY)

C-MOS 8192-WORDx8-BIT HIGH SPEED STATIC RAM

– TOP VIEW –

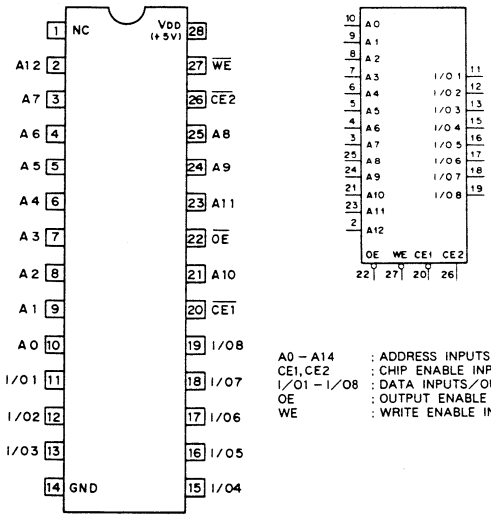

A0 – A14 : ADDRESS INPUTS
CE1, CE2 : CHIP ENABLE INPUT
I/O1 – I/O8 : DATA INPUTS/OUTPUTS
OE : OUTPUT ENABLE INPUT
WE : WRITE ENABLE INPUT

CE1	CE2	OE	WE	MODE	I/O TERMINAL
1	X	X	X	NOT SELECT	HIGH IMPEDANCE
X	0	X	X	NOT SELECT	HIGH IMPEDANCE
0	1	1	1	OUTPUT DISABLE	HIGH IMPEDANCE
0	1	0	1	READ	OUTPUT DATA
0	1	X	0	WRITE	INPUT DATA

0 : LOW LEVEL
1 : HIGH LEVEL
X : DON'T CARE

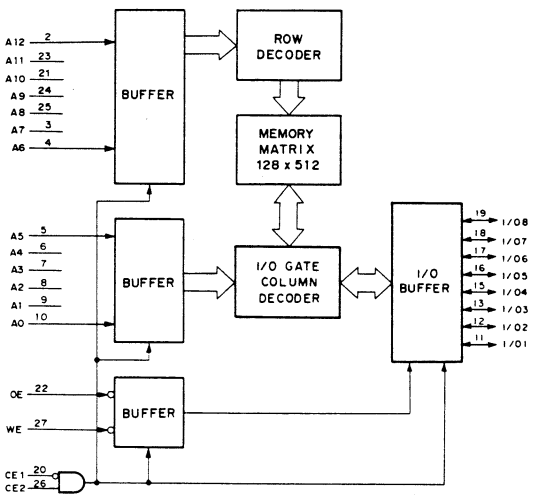

CXQ71054P (SONY)

C-MOS PROGRAMMABLE TIMER COUNTER
– TOP VIEW –

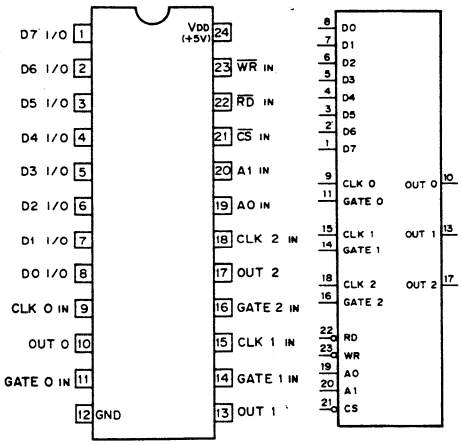

FUNCTION TABLE

INPUTS					FUNCTION
CS	RD	WR	A1	A0	
0	1	0	0	0	Load Counter No. 0
0	1	0	0	1	Load Counter No. 1
0	1	0	1	0	Load Counter No. 2
0	1	0	1	1	Control Word
0	0	1	0	0	Read Counter 0
0	0	1	0	1	Read Counter 1
0	0	1	1	0	Read Counter 2
0	0	1	1	1	No-Operation (HI-Z)
1	X	X	X	X	Disable (HI-Z)
0	1	1	X	X	No-Operation (HI-Z)

A0, A1 : COUNTER SELECT INPUTS
CLK 0 – 2 : COUNTER CLOCK INPUTS
CS : CHIP SELECT INPUT
D0 – D7 : 8-BIT DATA INPUTS/OUTPUTS
GATE 0 – 2 : COUNTER GATE INPUTS
OUT 0 – 2 : COUNTER OUTPUTS
RD : READ COUNTER INPUT
WR : WRITE CMD OR DATA INPUT

0;LOW LEVEL
1;HIGH LEVEL
X;DON'T CARE
HI-Z;HIGH IMPEDANCE

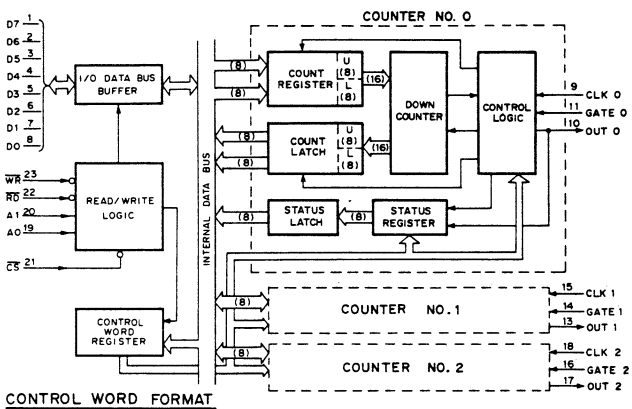

CONTROL WORD FORMAT

D7	D6	D5	D4	D3	D2	D1	D0
SC1	SC0	RL1	RL0	M2	M1	M0	BCD

BCD	OPERATION
0	16-BIT BINARY
1	BCD(4-DECADE)

M2	M1	M0	MODE
0	0	0	0
0	0	1	1
X	1	0	2
X	1	1	3
1	0	0	4
1	0	1	5

RL1	RL0	OPERATION
0	0	COUNTER LATCHING
0	1	READ/LOAD LSB ONLY
1	0	READ/LOAD MSB ONLY
1	1	LSB FIRST THEN MSB

SC1	SC0	SELECTED COUNTER
0	0	COUNTER No. 0
0	1	COUNTER No. 1
1	0	COUNTER No. 2
1	1	MULTIPLE LATCH CMD

CY7C421-30PC (CYPRESS)

C-MOS 512x9-BIT DUAL PORT FIFO MEMORY
– TOP VIEW –

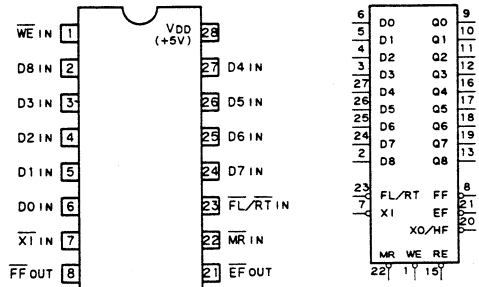

INPUT
D0–D8;DATA INPUTS
FL/RT;FIRST LOAD/RETRANSMIT
MR;MASTER RESET
RE;READ ENABLE
WE;WRITE ENABLE
XI;EXPANSION IN

OUTPUT
EF;EMPTY FLAG
FF;FULL FLAG
Q0–Q8;DATA OUTPUTS
XO/HF;EXPANSION
/HALE-FULL FLAG

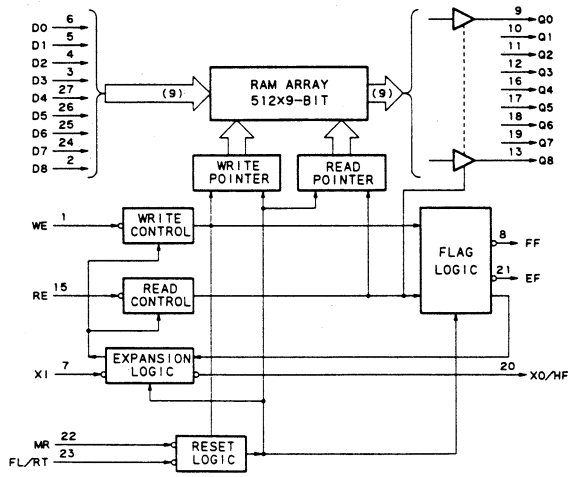

DS1230Y (DALLAS)

C-MOS 256K (32,768x8)-BIT NONVOLATILE S-RAM
– TOP/SIDE VIEW –

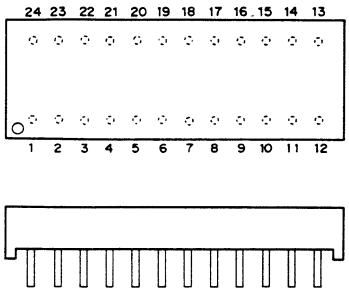

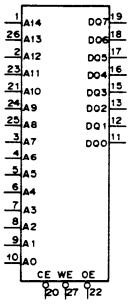

PIN No.	I/O	SIGNAL	PIN No.	I/O	SIGNAL
1	I	A14	15	I/O	DQ3
2	I	A12	16	I/O	DQ4
3	I	A7	17	I/O	DQ5
4	I	A6	18	I/O	DQ6
5	I	A5	19	I/O	DQ7
6	I	A4	20	I/O	$\overline{CE}$
7	I	A3	21	I	A10
8	I	A2	22	I/O	$\overline{OE}$
9	I	A1	23	I	A11
10	I	A0	24	I	A9
11	I/O	DQ0	25	I	A8
12	I/O	DQ1	26	I	A13
13	I/O	DQ2	27	I/O	$\overline{WE}$
14	–	GND	28	–	VDD (+5V)

A0 – A14 : ADDRESS INPUTS
$\overline{CE}$: CHIP ENABLE
DQ0 – DQ7 : DATA INPUT/OUTPUT
$\overline{OE}$: OUTPUT ENABLE
$\overline{WE}$: WRITE ENABLE

HD14046BP (HITACHI)

C-MOS PHASE LOCKED LOOP
– TOP VIEW –

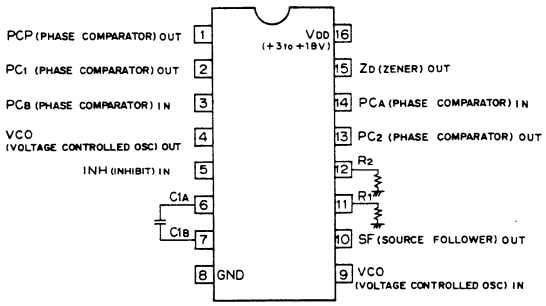

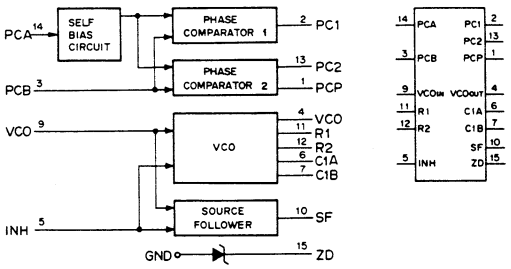

FT6022 (FUJITSU)

N-MOS FET ARRAY

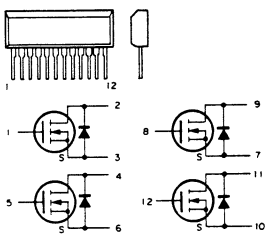

FT6022D (FUJITSU)

N-MOS FET ARRAY

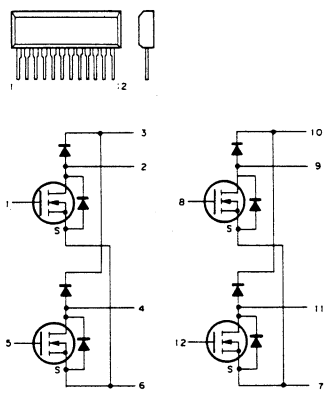

HD14053BFP (HITACHI) FLAT PACKAGE
UPD4053BC (NEC)

C-MOS TRIPLE 2-CHANNEL ANALOG MULTIPLEXER/DEMULTIPLEXER
– TOP VIEW –

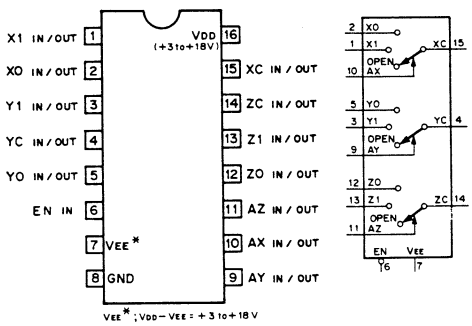

O ; LOW LEVEL
1 ; HIGH LEVEL
X ; DON'T CARE.

CONT. INPUTS		ON CHANNEL
EN	A (X_1,Y_1,Z_1)	
0	0	0
0	1	1
1	X	OPEN

HD63140CP (HITACHI)

C-MOS UNIVERSAL PULSE PROCESSOR
- TOP VIEW -

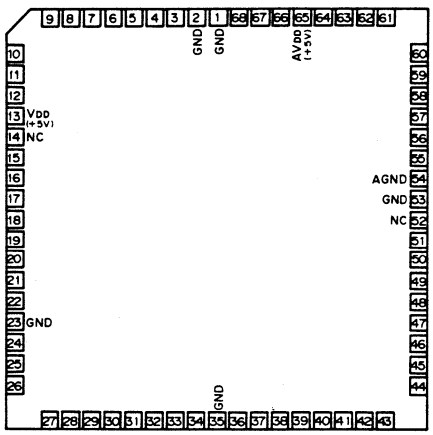

PIN No.	I/O	FUNCTION	PIN No.	I/O	FUNCTION	PIN No.	I/O	FUNCTION	PIN No.	I/O	FUNCTION
1	–	GND	18	I/O	D3	35	–	GND	52	–	NC
2	–	GND	19	I/O	D4	36	I/O	U15/P27	53	–	GND
3	O	CLK	20	I/O	D5	37	I/O	U14/P26	54	–	AGND
4	I	X	21	I/O	D6	38	I/O	U13/P25	55	I	AN9
5	I	X (EXT)	22	I/O	D7	39	I/O	U12/P24	56	I	AN8
6	I	OE	23	–	GND	40	I/O	U11/P23	57	I	AN7
7	I	RES	24	I	A0	41	I/O	U10/P22	58	I	AN6
8	I	STBY	25	I	A1	42	I/O	U9/P21	59	I	AN5
9	I	R/W	26	I	A2	43	I/O	U8/P20	60	I	AN4
10	I	DS	27	I	A3	44	I/O	U7/P17	61	I	AN3
11	I	CS	28	I	A4	45	I/O	U6/P16	62	I	AN2
12	O	READY	29	I	A5	46	I/O	U5/P15	63	I	AN1
13	–	V_{DD}(+5V)	30	I	A6	47	I/O	U4/P14	64	I	AN0
14	–	NC	31	I	A7	48	I/O	U3/P13	65	–	AV_{DD}(+5V)
15	I/O	D0	32	I	A8	49	I/O	U2/P12	66	O	WDTO
16	I/O	D1	33	I	A9	50	I/O	U1/P11	67	O	INT1
17	I/O	D2	34	I	A10	51	I/O	U0/P10	68	O	INT0

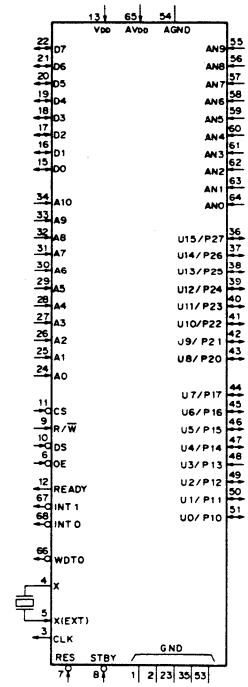

A0 – A10 : ADDRESS INPUTS
AN0 – AN9 : ANALOG INPUTS
CLK : CLOCK OUTPUT
CS : CHIP SELECT INPUT
D0 – D7 : DATA INPUTS/OUTPUTS
DS : DATA STROBE INPUT
INT0, 1 : INTERRUPT OUTPUTS
OE : OUTPUT ENABLE INPUT
READY : READY OUTPUT
RES : RESET INPUT
R/W : READ/WRITE INPUT
STBY : STANDBY INPUT
U0/P10 – U15/P27
: UPP PULSE I/O OR MPU I/O PORT
WDTO : WATCH DOG TIMER OUTPUT
X : X'TAL
X (EXT) : X'TAL OR EXT CLOCK INPUT

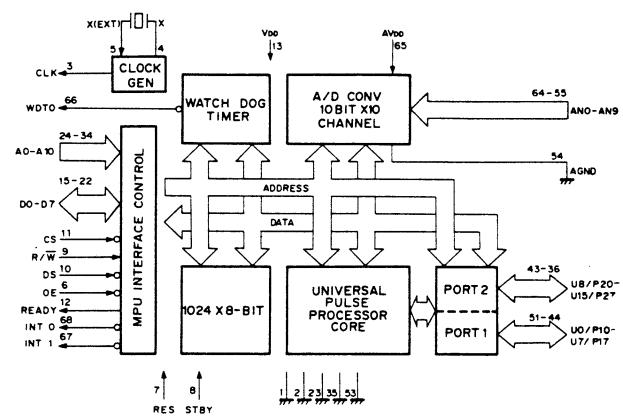

HD63484CP8 (HITACHI)

C-MOS ADVANCED CRT CONTROLLER
– TOP VIEW –

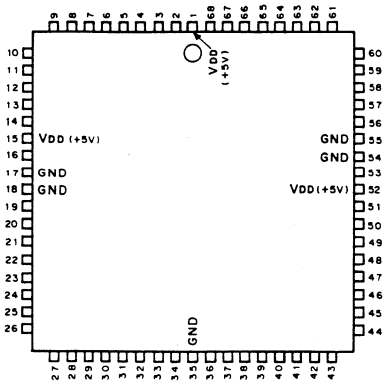

(VDD = + 5V)

PIN No.	I/O	SIGNAL	PIN No.	I/O	SIGNAL	PIN No.	I/O	SIGNAL	PIN No.	I/O	SIGNAL
1	–	VDD	18	–	GND	35	–	GND	52	–	VDD
2	O	CUD1	19	I/O	D0	36	O	RA4	53	I	2CK
3	O	CUD2	20	I/O	D1	37	O	MA19/RA3	54	–	GND
4	I	R/$\overline{W}$	21	I/O	D2	38	O	MA18/RA2	55	–	GND
5	I	CS	22	I/O	D3	39	O	MA17/RA1	56	O	MCYC
6	I	RS	23	I/O	D4	40	O	MA16/RA0	57	O	AS
7	I	RES	24	I/O	D5	41	I/O	MAD15	58	O	DRAW
8	I/O	DONE	25	I/O	D6	42	I/O	MAD14	59	O	MRD
9	O	DREQ	26	I/O	D7	43	I/O	MAD13	60	O	CHR
10	I	DACK	27	I/O	D8	44	I/O	MAD12	61	I/O	MAD4
11	I	DTACK	28	I/O	D9	45	I/O	MAD11	62	I/O	MAD3
12	O	IRQ	29	I/O	D10	46	I/O	MAD10	63	I/O	MAD2
13	O	HSYNC	30	I/O	D11	47	I/O	MAD9	64	I/O	MAD1
14	O	VSYNC	31	I/O	D12	48	I/O	MAD8	65	I/O	MAD0
15	–	VDD	32	I/O	D13	49	I/O	MAD7	66	O	DISP2
16	I/O	EXSYNC	33	I/O	D14	50	I/O	MAD6	67	O	DISP1
17	–	GND	34	I/O	D15	51	I/O	MAD5	68	I	LPSTB

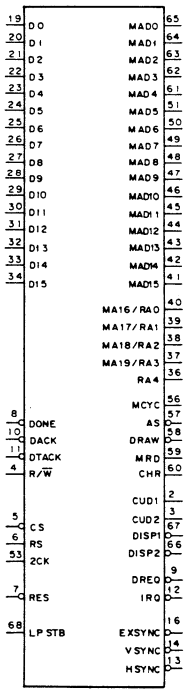

INPUT

2CK	; 2CLOCK
CS	; CHIP SELECT
DACK	; DMA ACKNOWLEDGE
DTACK	; DATA TRANSFER ACKNOWLEDGE
LPSTB	; LIGHT PEN STROBE
R/W	; READ/WRITE
RES	; RESET
RS	; REGISTER SELECT

OUTPUT

AS	; ADDRESS STROBE
CHR	; CHARACTER
CUD1, 2	; CURSOR DISPLAY 1, 2
DISP1, 2	; DISPLAY TIMING 1, 2
DRAW	; DRAW
DREQ	; DMA REQUEST
HSYNC	; HORIZONTAL SYNC
IRQ	; INTERRUPT REQUEST
MA16 – MA19	; MEMORY ADDRESS 16 – 19
MCYC	; MEMORY CYCLE
MRD	; MEMORY READ
RA0 – RA4	; RASTER ADDRESS
VSYNC	; VERTICAL SYNC

INPUT/OUTPUT

D0 – D15	; DATA BUS 0 – 15
DONE	; DONE
EXSYNC	; EXTERNAL SYNC
MAD0 – MAD15	; MEMORY ADDRESS/DATA 0 – 15

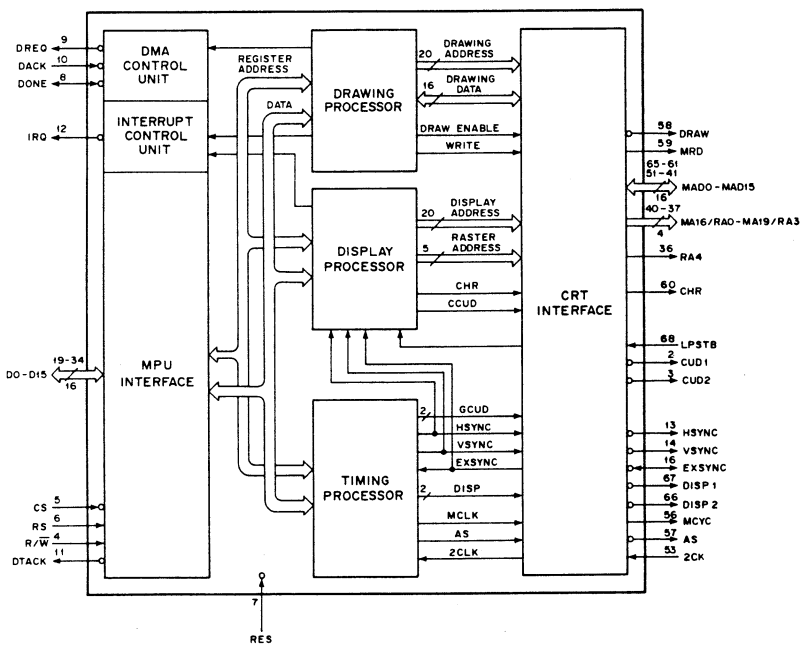

HD63487CP (HITACHI)

C-MOS MEMORY INTERFACE AND VIDEO ATTRIBUTE CONTROLLER
– TOP VIEW –

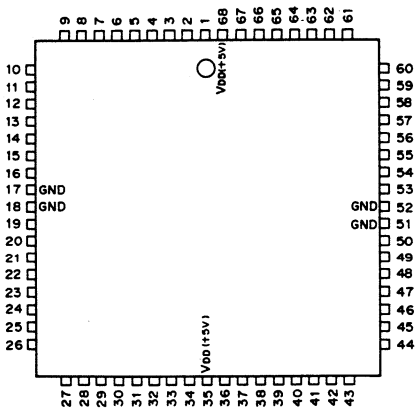

(VDD = + 5V)

PIN No.	I/O	SIGNAL	PIN No.	I/O	SIGNAL	PIN No.	I/O	SIGNAL	PIN No.	I/O	SIGNAL
1	I	CUD1	18	–	GND	35	–	VDD V	52	–	GND
2	I	DISP1	19	I/O	MAD6	36	O	VIDEO C	53	O	OE
3	O	DOTCLK	20	I/O	MAD7	37	O	VIDEO D	54	O	FA9
4	O	VSYNC/2	21	I/O	MAD8	38	O	BL2IRQ	55	O	FA8
5	O	SHFTEN	22	I/O	MAD9	39	I	IRQCLR	56	O	FA0
6	I/O	MAD0	23	I/O	MAD10	40	I/O	FD4	57	O	FA7
7	I/O	MAD1	24	I/O	MAD11	41	I/O	FD7	58	O	FA1
8	I/O	MAD2	25	I/O	MAD12	42	I/O	FD5	59	O	FA6
9	I/O	MAD3	26	I/O	MAD13	43	I/O	FD6	60	O	FA2
10	I/O	MAD4	27	I/O	MAD14	44	I/O	FD0	61	O	FA5
11	I	MRD	28	I/O	MAD15	45	I/O	FD3	62	O	FA3
12	I	DRAW	29	I	MA16	46	I/O	FD1	63	O	FA4
13	I	AS	30	I	MA17	47	I/O	FD2	64	I	HSYNC
14	I	MCYC	31	I	MA18	48	O	WE	65	I	INCLK
15	O	2CLK	32	I	MA19	49	O	CS	66	I	TEST
16	I/O	MAD5	33	O	VIDEO A	50	O	RAS	67	I	VSYNC
17	–	GND	34	O	VIDEO B	51	–	GND	68	–	VDD

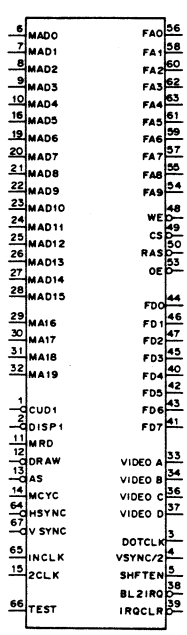

INPUT

AS	; ADDRESS STROBE
CUD1	; CURSOR DISPLAY 1
DISP1	; DISPLAY TIMING 1
DRAW	; DRAW
HSYNC	; HORIZONTAL SYNC
INCLK	; MASTER CLOCK
IRQCLR	; BL2IRQ CLEAR
MA16 – MA19	; MEMORY ADDRESS
MCYC	; MEMORY CYCLE
MRD	; MEMORY READ
TEST	; TEST
VSYNC	; VERTICAL SYNC

OUTPUT

2CLK	; 2CLK
BL2IRQ	; SETTED MA19
CS	; CHIP SELECT
DOTCLK	; VIDEO SIGNAL OUT CLOCK
FA0 – FA9	; FRAME BUFFER ADDRESS
OE	; OUTPUT ENABLE
RAS	; RAS TIMING FOR DRAM
SHFTEN	; VIDEO SIGNAL OUTPUT ENABLE
VIDEO A – VIDEO D	; VIDEO SIGNAL
VSYNC/2	; VSYNC 1/2
WE	; WRITE ENABLE

INPUT/OUTPUT

FD0 – FD7	; FRAME BUFFER DATA
MAD0 – MAD15	; MEMORY ADDRESS/DATA

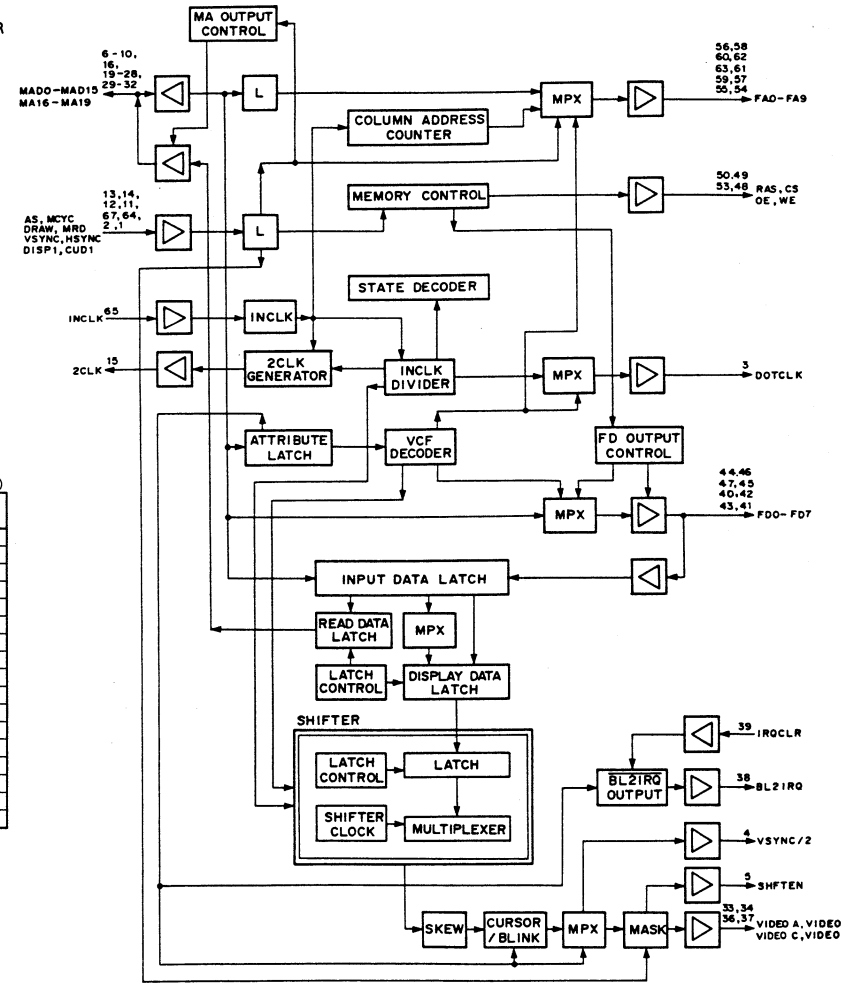

HM514402ZP-10 (HITACHI) (ACCESS TIME = 100nS)

C-MOS 4M (1,048,576WORDx4)-BIT MULTIPORT DYNAMIC RAM

– TOP VIEW –

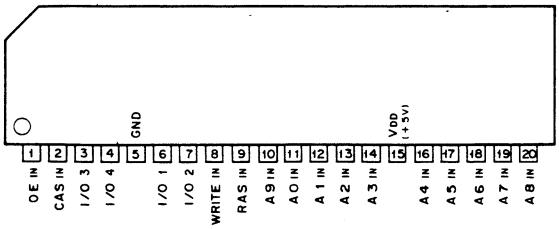

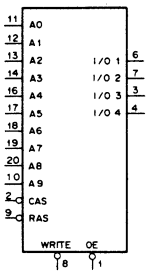

A0 – A9 : ADDRESS INPUTS
CAS : COLUMN ADDRESS STROBE INPUT
I/O1 – I/O4 : DATA INPUTS/OUTPUTS
OE : OUTPUT ENABLE INPUT
RAS : ROW ADDRESS STROBE INPUT
WRITE : READ/WRITE INPUT

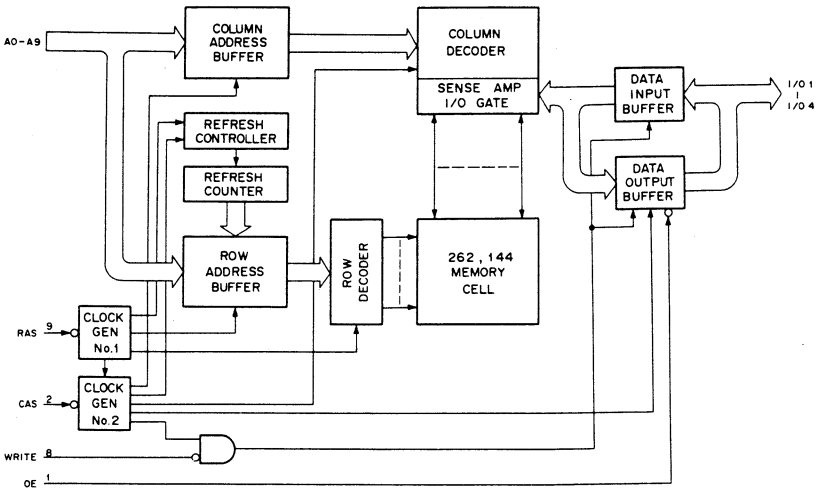

ICL7665SCPA (INTERSIL)

C-MOS MICROPOWER UNDER/OVER VOLTAGE DETECTOR

– TOP VIEW –

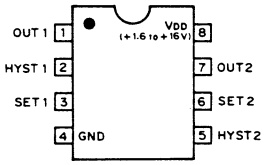

HYST : HYSTERESIS

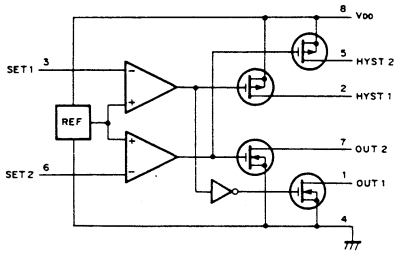

IDT74FCT821ATP (IDT)

IDT74FCT821ATSO (IDT) FLAT PACKAGE

C-MOS 10-BIT BUS INTERFACE FLIP-FLOPS WITH 3-STATE OUTPUTS

– TOP VIEW –

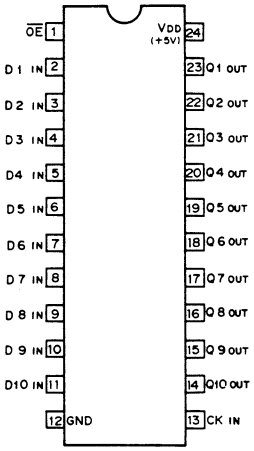

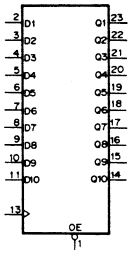

FUNCTION TABLE (EACH FLIP-FLOP)

INPUTS			OUTPUT
OE	CK	D	Q
0	↑	1	1
0	↑	0	0
0	0	×	Q0
1	×	×	HI-Z

0 : LOW LEVEL
1 : HIGH LEVEL
X : DON'T CARE
HI-Z : HIGH IMPEDANCE

LOGIC DIAGRAM (POSITIVE LOGIC)

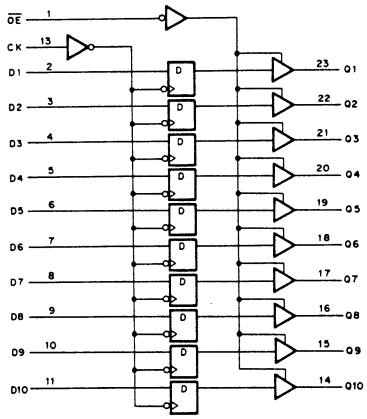

LM317T (NSC)

3-TERMINAL ADJUSTABLE REGULATOR

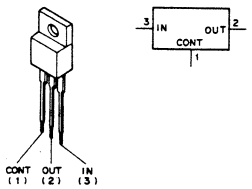

LM337T (NSC)

3-TERMINAL ADJUSTABLE REGULATOR NEGATIVE

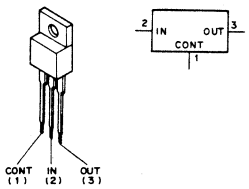

LM386N (NS)

LOW VOLTAGE AUDIO POWER AMPLIFIER
- TOP VIEW -

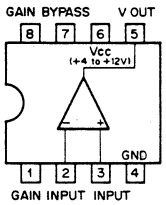

LM7812CT (NSC) + 12V

POSITIVE VOLTAGE REGULATOR
- FRONT VIEW -

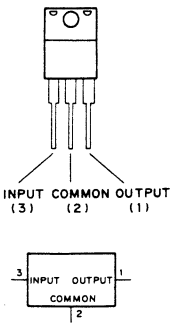

LM78L05ACZ (NS) + 5V
NJM78L05A (JRC) + 5V (100mA)
NJM78L06A (JRC) + 5V (100mA)
NJM78L09A (JRC) + 5V (100mA)
RC78L05A (RAYTHEON) + 5V
RC78L06A (RAYTHEON) + 6V
RC78L09A (RAYTHEON) + 9V

POSITIVE VOLTAGE REGULATOR (100mA)

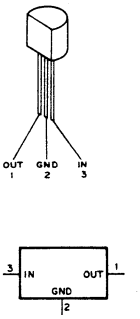

LM7912CT (NS) − 12V

NEGATIVE VOLTAGE REGULATOR
- FRONT VIEW -

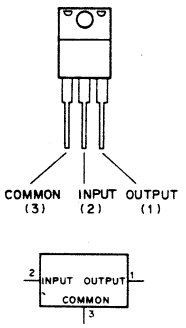

LT1081CN (LINEAR TECHNOLOGY)

RS-232 DRIVER/RECEIVER
- TOP VIEW -

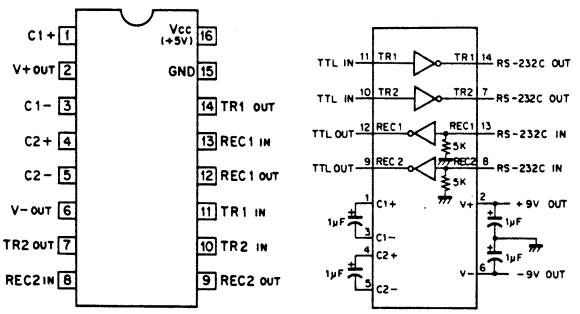

M5220L (MITSUBISHI)

LOW NOISE OPERATIONAL AMPLIFIER
– SIDE VIEW –

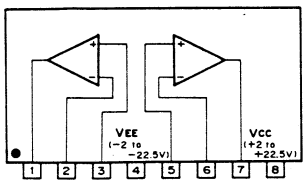

M5220P (MITSUBISHI)
RC2043MD (RAYTHEON) FLAT PACKAGE
RC4558PS (TI) FLAT PACKAGE
RC5532DD (RAYTHEON)
UPC4558C (NEC)
UPC4558G2 (NEC) FLAT PACKAGE

DUAL OPERATIONAL AMPLIFIER
– TOP VIEW –

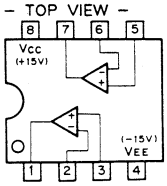

M5238FP (MITSUBISHI) FLAT PACKAGE
M5238P (MITSUBISHI)
UPC4082G2 (NEC) FLAT PACKAGE

OPERATIONAL AMPLIFIER
(JFET INPUT)
– TOP VIEW –

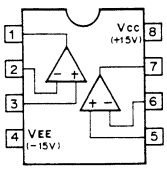

M5241L (MITSUBISHI)

VOLTAGE CONTROLLED AMPLIFIER
– PRINTED SIDE VIEW –

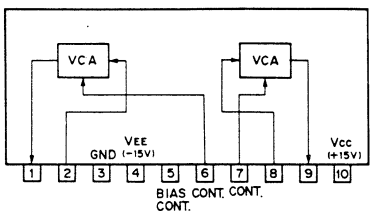

M5F78M05L (MITSUBISHI) + 5V

POSITIVE VOLTAGE REGULATOR (500mA)
– PRINTED SIDE VIEW –

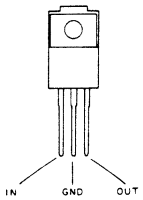

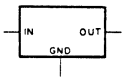

MB3759 (FUJITSU)
MB3759PF (FUJITSU) FLAT PACKAGE
MB3769AP (FUJITSU)

PWM POWER CONTROL
– TOP VIEW –

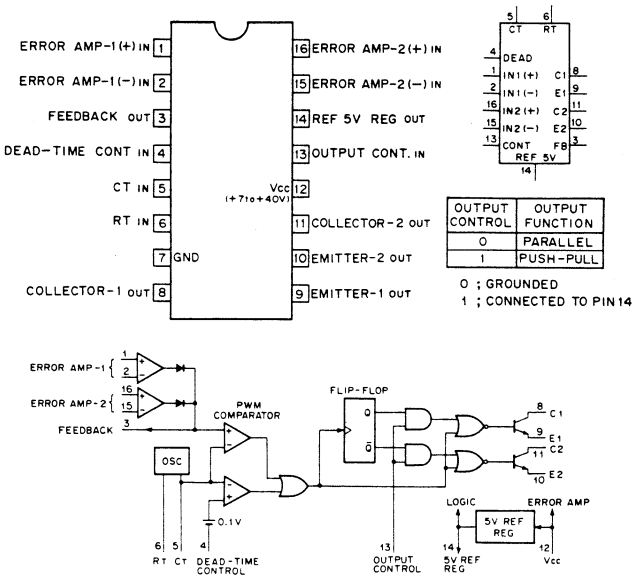

OUTPUT CONTROL	OUTPUT FUNCTION
0	PARALLEL
1	PUSH-PULL

0 ; GROUNDED
1 ; CONNECTED TO PIN 14

MB4002 (FUJITSU)
MB4002PF (FUJITSU) FLAT PACKAGE

HIGH SPEED VOLTAGE COMPARATOR
– TOP VIEW –

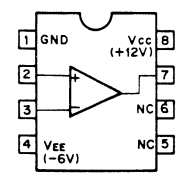

MB81C79A-45P (FUJITSU)

C-MOS 72K (8192x9)-BIT STATIC RAM

– TOP VIEW –

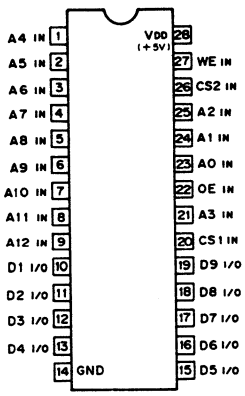

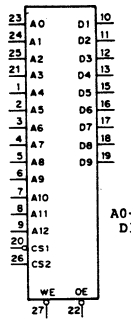

A0-A12 ; ADDRESS INPUTS
D1-D9 ; DATA INPUTS/OUTPUTS
CS1 ; CHIP SELECT INPUT 1
CS2 ; CHIP SELECT INPUT 2
OE ; OUTPUT ENABLE INPUT
WE ; WRITE ENABLE INPUT

WE	CS1	CS2	OE	D1-D9	FUNCTIION
X	1	X	X	HI-Z	STAND BY
X	0	0	X	HI-Z	NO SELECTION
1	0	1	1	HI-Z	OUTPUT DISABLE
1	0	1	0	D OUT	READ
0	0	1	X	D IN	WRITE

0 ; LOW LEVEL
1 ; HIGH LEVEL
X ; DON'T CARE
HI-Z ; HIGH IMPEDANCE

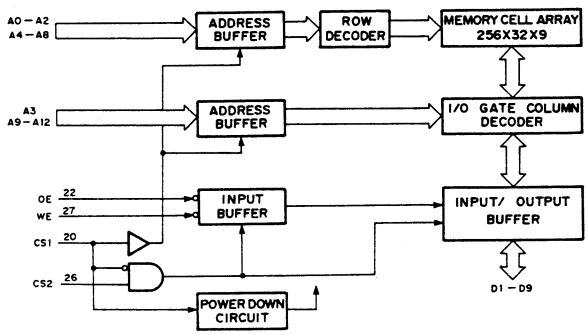

MB8421-90LPFQ (FUJITSU) (ACCESS TIME = 90nS) FLAT PACKAGE

C-MOS 16384 (2Kx8) BIT DUAL PORT STATIC RAM

– TOP VIEW –

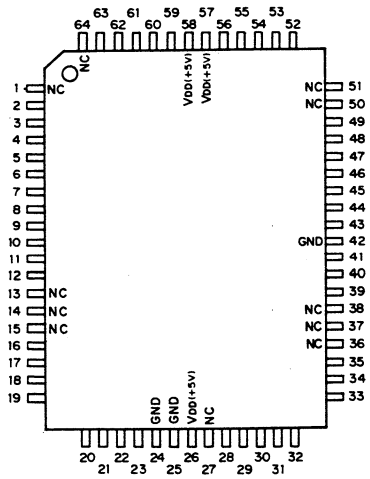

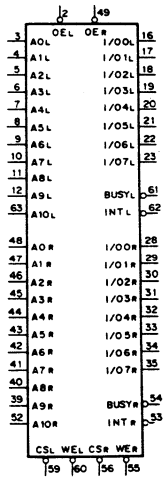

A0L – A10L, A0R – A10R : ADDRESS INPUTS
I/00L – I/07L, I/00R – I/07R : DATA INPUTS/OUTPUTS
CSL, CSR : CHIP SELECT INPUT
WEL, WER : WRITE ENABLE INPUT
OEL, OER : OUTPUT ENABLE INPUT
BUSYL, BUSYR : BUSY OUTPUT
INTL, INTR : INTERRUPT OUTPUT

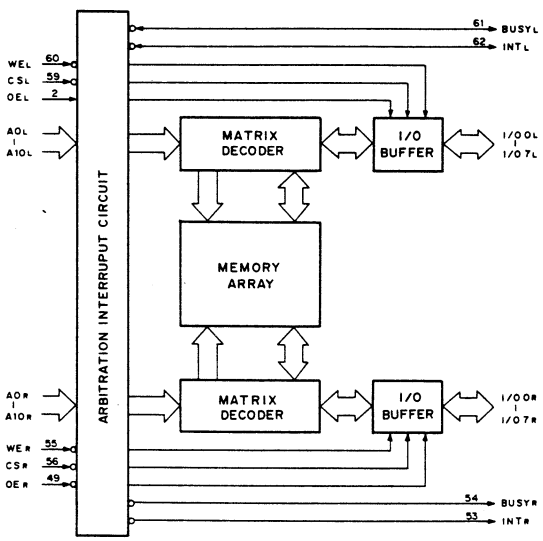

MB8431-90LPFQ (FUJITSU)

C-MOS 16K (2048x8)-BIT DUAL PORT STATIC RAM
– TOP VIEW –

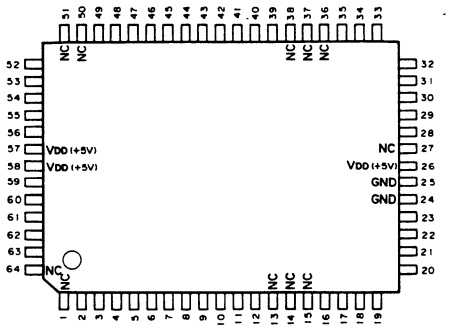

PIN No.	I/O	SIGNAL	PIN No.	I/O	SIGNAL	PIN No.	I/O	SIGNAL	PIN No.	I/O	SIGNAL
1	–	NC	17	I/O	I/O1L	33	I/O	I/O5R	49	I	OER
2	I	OEL	18	I/O	I/O2L	34	I/O	I/O6R	50	–	NC
3	I	A0L	19	I/O	I/O3L	35	I/O	I/O7R	51	–	NC
4	I	A1L	20	I/O	I/O4L	36	–	NC	52	I	A10R
5	I	A2L	21	I/O	I/O5L	37	–	NC	53	O	INTR
6	I	A3L	22	I/O	I/O6L	38	–	NC	54	I	BUSYR
7	I	A4L	23	I/O	I/O7L	39	I	A9R	55	I	WER
8	I	A5L	24	–	GND	40	I	A8R	56	I	CSR
9	I	A6L	25	–	GND	41	I	A7R	57	–	VDD
10	I	A7L	26	–	VDD	42	I	A6R	58	–	VDD
11	I	A8L	27	–	NC	43	I	A5R	59	I	CSL
12	I	A9L	28	I/O	I/O0R	44	I	A4R	60	I	WEL
13	–	NC	29	I/O	I/O1R	45	I	A3R	61	I	BUSYL
14	–	NC	30	I/O	I/O2R	46	I	A2R	62	O	INTL
15	–	NC	31	I/O	I/O3R	47	I	A1R	63	I	A10L
16	I/O	I/O0L	32	I/O	I/O4R	48	I	A0R	64	–	NC

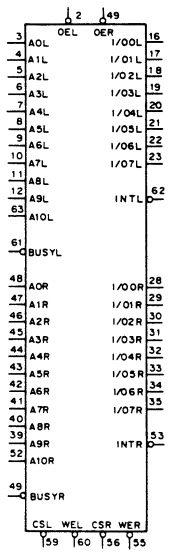

A0L – A10L,
A0R – A10R ; ADDRESS INPUTS
BUSYL, BUSYR ; BUSY INPUTS
CSL, CSR ; CHIP SELECT INPUTS
I/O0L – I/O10L,
I/O0R – I/O10R ; DATA INPUTS/OUTPUTS
INTL, INTR ; INTERRUPT OUTPUTS
OEL, OER ; OUTPUT ENABLE INPUTS
WEL, WER ; WRITE ENABLE INPUTS

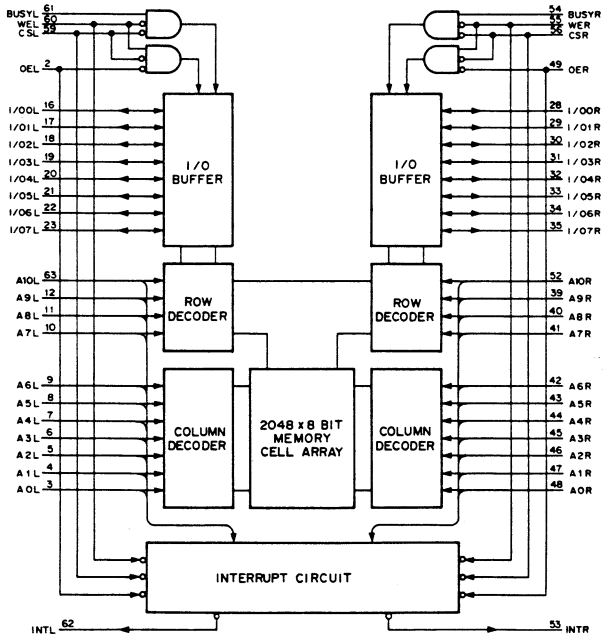

MB86022PF (FUJITSU) FLAT PACKAGE

C-MOS 4-CHANNEL 8-BIT D/A CONVERTER
– TOP VIEW –

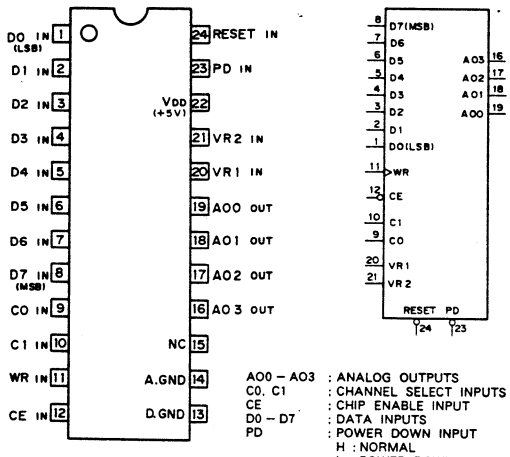

AO0 – AO3 : ANALOG OUTPUTS
C0, C1 : CHANNEL SELECT INPUTS
CE : CHIP ENABLE INPUT
D0 – D7 : DATA INPUTS
PD : POWER DOWN INPUT
H : NORMAL
L : POWER DOWN
(ANALOG OUT = HI-IMPEDANCE)
RESET : RESET INPUT
VR1 VR2 : REFERENCE VOLTAGE INPUTS
WR : WRITE CLOCK INPUT

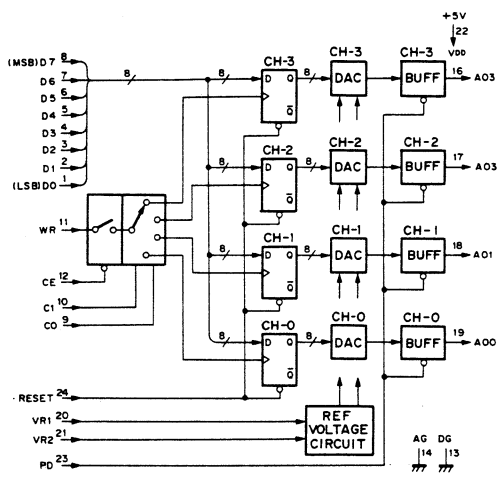

FUNCTION SELECT

CONTROL INPUTS					LATCH			
RESET	CE	WR	C1	C0	CH-3	CH-2	CH-1	CH-0
1	0	↑	0	0	HOLD	HOLD	HOLD	WRITE
1	0	↑	0	1	HOLD	HOLD	WRITE	HOLD
1	0	↑	1	0	HOLD	WRITE	HOLD	HOLD
1	0	↑	1	1	WRITE	HOLD	HOLD	HOLD
1	1	X	X	X	HOLD	HOLD	HOLD	HOLD
0	X	X	X	X	RESET TO 10000000			

D/A CONVERSION

DATA INPUTS								OUTPUT VOLTAGE
D7	D6	D5	D4	D3	D2	D1	D0	VR1 = OPEN VR2 = OPEN
1	1	1	1	1	1	1	1	383/512VDD
1	1	1	1	1	1	1	0	382/512VDD
1	1	1	1	1	1	0	1	381/512VDD
----------								--------
1	0	0	0	0	0	0	1	257/512VDD
1	0	0	0	0	0	0	0	256/512VDD (= 1/2VDD)
0	1	1	1	1	1	1	1	255/512VDD
0	1	1	1	1	1	1	0	254/512VDD
----------								--------
0	0	0	0	0	0	1	0	130/512VDD
0	0	0	0	0	0	0	1	129/512VDD
0	0	0	0	0	0	0	0	128/512VDD (= 1/4VDD)

0 : LOW LEVEL
1 : HIGH LEVEL
X : DON'T CARE

MB89251APF (FUJITSU) FLAT PACKAGE

C-MOS SERIAL DATA TRANSMITTER/RECEIVER
– TOP VIEW –

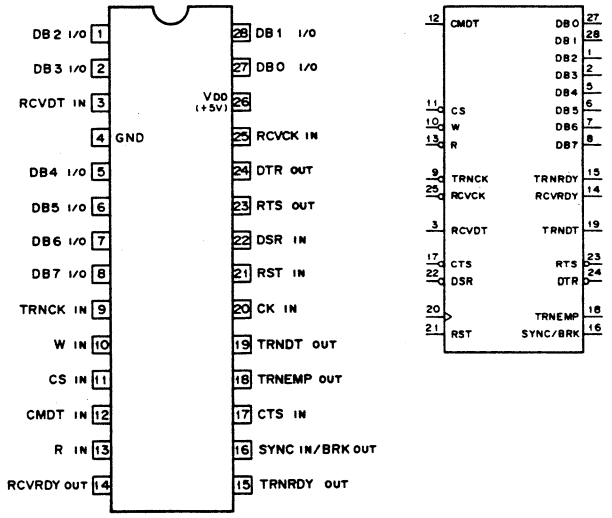

CS	R	W	CMDT	OBJECT OF ACCESS IN REGISTER, STATE OF DATA BUS
0	0	1	0	READ OUT RECEIVE DATA BUFFER REGISTER
0	1	0	0	WRITE IN TRANSMIT DATA BUFFER REGISTER
0	0	1	1	READ OUT STATUS REGISTER
0	1	0	1	WRITE IN MODE COMMAND REGISTER
0	1	1	X	DATA BUS IN 3-STATE
1	X	X	X	DATA BUS IN 3-STATE

0 ; LOW LEVEL
1 ; HIGH LEVEL
X ; DON'T CARE

INPUT
CK ; CLOCK
CMDT ; COMMAND DATA
CS ; CHIP SELECT
CTS ; CLEAR TO SEND
DSR ; DATA SET READY
R ; READ EFFECTIVE
RCVCK ; RECEIVE CLOCK
RCVDT ; RECEIVE DATA
RST ; RESET
SYNC ; SYNCHRONOUS CHARACTER DETECT
TRNCK ; TRANSMIT CLOCK
W ; WRITE EFFECTIVE

OUTPUT
BRK ; BREAK CODE DETECT
DTR ; DATA TERMINAL READY
RCVRDY ; RECEIVE POSSIBLE
RST ; SEND REQUEST
TRNEMP ; TRANSMIT BUFFER
TRNDT ; TRANSMIT DATA
TRNRDY ; TRANSMITION POSSIBLE

INPUT/OUTPUT
DB0 – DB7; DATA BUS

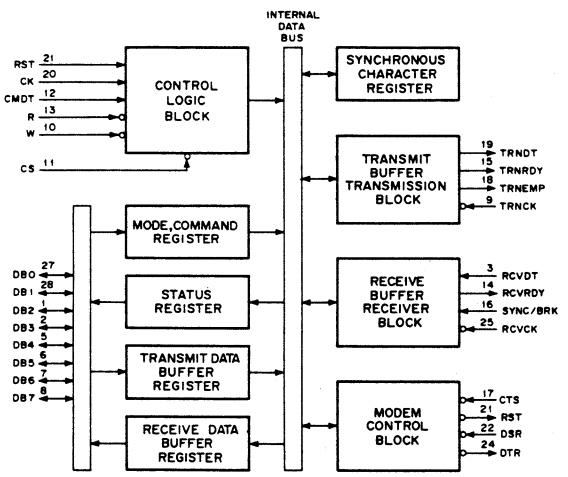

MB89254H-SOP (FUJITSU) FLAT PACKAGE

C-MOS PROGRAMABLE INTERVAL TIMER

– TOP VIEW –

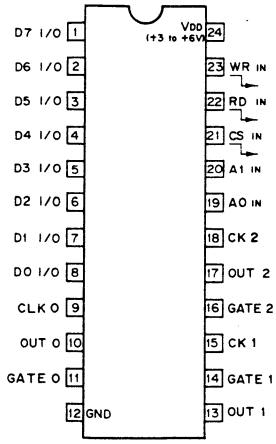

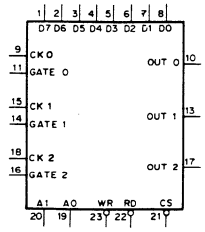

D7 – D0 ; 8-BIT DATA I/O
CK N ; COUNTER CLOCK
GATE N ; COUNTER GATE
OUT N ; COUNTER OUTPUT
RD ; READ COUNTER
WR ; WRITE CMD OR DATA
CS ; CHIP SELECT
A1, A0 ; COUNTER SELECT

FUNCTION TABLE

INPUTS					FUNCTION
CS	RD	WR	A1	A0	
0	1	0	0	0	Load Counter No. 0
0	1	0	0	1	Load Counter No. 1
0	1	0	1	0	Load Counter No. 2
0	1	0	1	1	Control Word
0	0	1	0	0	Read Counter 0
0	0	1	0	1	Read Counter 1
0	0	1	1	0	Read Counter 2
0	0	1	1	1	No-Operation (HI-Z)
1	X	X	X	X	Disable (HI-Z)
0	1	1	X	X	No-Operation (HI-Z)

0;LOW LEVEL
1;HIGH LEVEL
X;DON'T CARE
HI-Z;HIGH IMPEDANCE

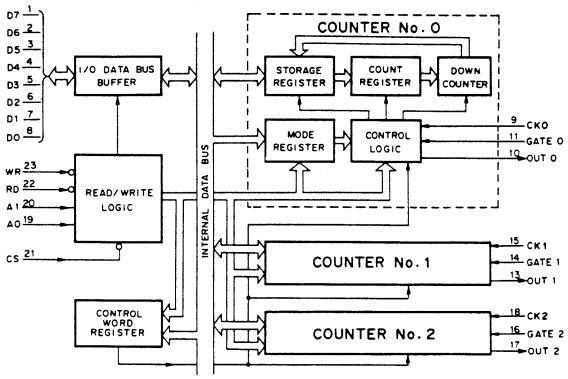

CONTROL WORD FORMAT

D7	D6	D5	D4	D3	D2	D1	D0
SC1	SC0	RL1	RL0	M2	M1	M0	BCD

BCD	OPERATION
0	16-BIT BINARY
1	BCD(4-DECADE)

M2	M1	M0	MODE
0	0	0	0
0	0	1	1
X	1	0	2
X	1	1	3
1	0	0	4
1	0	1	5

RL1	RL0	OPERATION
0	0	COUNTER LATCHING
0	1	READ/LOAD LSB ONLY
1	0	READ/LOAD MSB ONLY
1	1	LSB FIRST THEN MSB

SC1	SC0	SELECTED COUNTER
0	0	COUNTER No. 0
0	1	COUNTER No. 1
1	0	COUNTER No. 2
1	1	ILLEGAL

MB84256A-70LLPF (FUJITSU) FLAT PACKAGE

C-MOS 256K (32768x8)-BIT STATIC RAM

– TOP VIEW –

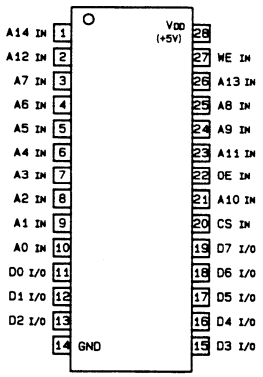

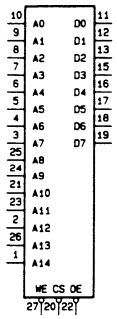

A0–A14; ADDRESS INPUTS
D0–D7; DATA INPUTS/OUTPUTS
CS; CHIP SELECT INPUT
OE; OUTPUT ENABLE INPUT
WE; WRITE ENABLE INPUT

CS	OE	WE	OUTPUTS	FUNCTION
1	X	X	HI-Z	NO SELECTION
0	1	1	HI-Z	OUTPUT DISABLE
0	0	1	Dout	READ
0	X	0	Din	WRITE

0; LOW LEVEL
1; HIGH LEVEL
X; DON'T CARE
HI-Z; HIGH IMPEDANCE

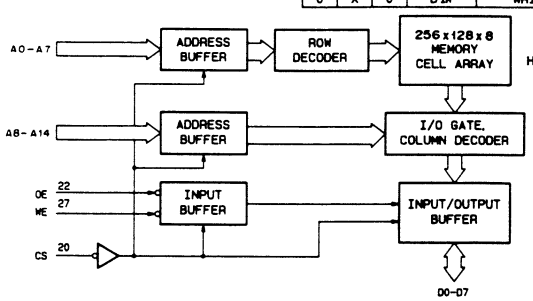

MB89363PF (FUJITSU) FLAT PACKAGE

C-MOS PARALLEL DATA I/O INTERFACE

– TOP VIEW –

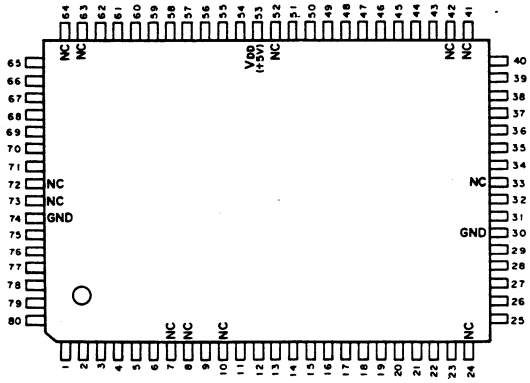

(VDD = + 5V)

PIN No.	I/O	SIGNAL	PIN No.	I/O	SIGNAL	PIN No.	I/O	SIGNAL	PIN No.	I/O	SIGNAL
1	I/O	P34	21	I/O	P06	41	–	NC	61	I/O	P40
2	I/O	P35	22	I/O	P05	42	–	NC	62	I/O	P53
3	I/O	P36	23	I/O	P04	43	I/O	P23	63	–	NC
4	I/O	P37	24	–	NC	44	I/O	P10	64	–	NC
5	I	W	25	I/O	P03	45	I/O	P11	65	I/O	P52
6	I	RST	26	I/O	P02	46	I/O	P12	66	I/O	P51
7	–	NC	27	I/O	P01	47	I/O	P13	67	I/O	P50
8	–	NC	28	I/O	P00	48	I/O	P14	68	I/O	P54
9	I	RH/$\overline{RL}$	29	I	CS1	49	I/O	P15	69	I/O	P55
10	–	NC	30	–	GND	50	I/O	P16	70	I/O	P56
11	I	OUS/$\overline{INS}$	31	I	RSLCT1	51	I/O	P17	71	I/O	P57
12	I/O	DB0	32	I	RSLCT0	52	–	NC	72	–	NC
13	I/O	DB1	33	–	NC	53	–	VDD	73	–	NC
14	I/O	DB2	34	I/O	P27	54	I/O	P47	74	–	GND
15	I/O	DB3	35	I/O	P26	55	I/O	P46	75	I	CS2
16	I/O	DB4	36	I/O	P25	56	I/O	P45	76	I	R
17	I/O	DB5	37	I/O	P24	57	I/O	P44	77	I/O	P30
18	I/O	DB6	38	I/O	P20	58	I/O	P43	78	I/O	P31
19	I/O	DB7	39	I/O	P21	59	I/O	P42	79	I/O	P32
20	I/O	P07	40	I/O	P22	60	I/O	P41	80	I/O	P33

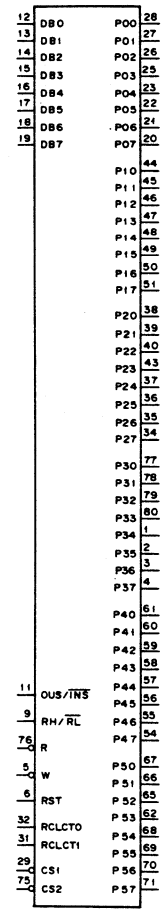

INPUT

CS1, CS2 ; CHIP SELECT
OUS/$\overline{INS}$; PORT 0, 3 READ SELECT
R ; READ
RCLCT0, RCLCT1 ; OBJECT OF ACCESS
RH/$\overline{RL}$; RESET ACTIVE LEVEL SELECT
RST ; RESET
W ; WRITE

INPUT/OUTPUT

DB0 – DB7 ; DATA BUS
P00 – P07 ; PORT 0 (GROUP 0)
P10 – P17 ; PORT 1 (GROUP 1)
P20 – P27 ; PORT 2 (P20 – P23 : GROUP 1, P24 – P27 : GROUP 0)
P30 – P37 ; PORT 3 (GROUP 2)
P40 – P47 ; PORT 4 (GROUP 3)
P50 – P57 ; PORT 5 (P50 – P53 : GROUP 3, P54 – P57 : GROUP 2)

CS1	CS2	R	W	RSLCT1	RSLCT0	DATA BUS ACTION
0	1	0	1	0	0	PORT 0 DATA→MPU
0	1	0	1	0	1	PORT 1 DATA→MPU
0	1	0	1	1	0	PORT 2 DATA→MPU
0	1	1	0	0	0	MPU→PORT 0 DATA
0	1	1	0	0	1	MPU→PORT 1 DATA
0	1	1	0	1	0	MPU→PORT 2 DATA
0	1	1	0	1	1	MPU→CONTROL PARAMETER 1
1	0	0	1	0	0	PORT 3 DATA→MPU
1	0	0	1	0	1	PORT 4 DATA→MPU
1	0	0	1	1	0	PORT 5 DATA→MPU
1	0	1	0	0	0	MPU→PORT 3 DATA
1	0	1	0	0	1	MPU→PORT 4 DATA
1	0	1	0	1	0	MPU→PORT 5 DATA
1	0	1	0	1	1	MPU→CONTROL PARAMETER 2
1	1	X	X	X	X	DATA BUS ; HI-Z
0	1	0	1	1	1	PROHIBITE
0	1	1	1	X	X	DATA BUS ; HI-Z
1	0	0	1	1	1	PROHIBITE
1	0	1	1	X	X	DATA BUS ; HI-Z
0	0	X	X	X	X	PROHIBITE

RH/$\overline{RL}$	RST ACTIVE LEVEL
0	ACTIVE LOW
1	ACTIVE HIGH

OUS/$\overline{INS}$	DB0 – DB7 READ DATA
0	PORT 0, PORT 3 LATCH DATA
1	PORT 0, PORT 3 EXIT TERMINAL DATA

0 ; LOW LEVEL
1 ; HIGH LEVEL
X ; DON'T CARE
HI – Z ; HIGH IMPEDANCE

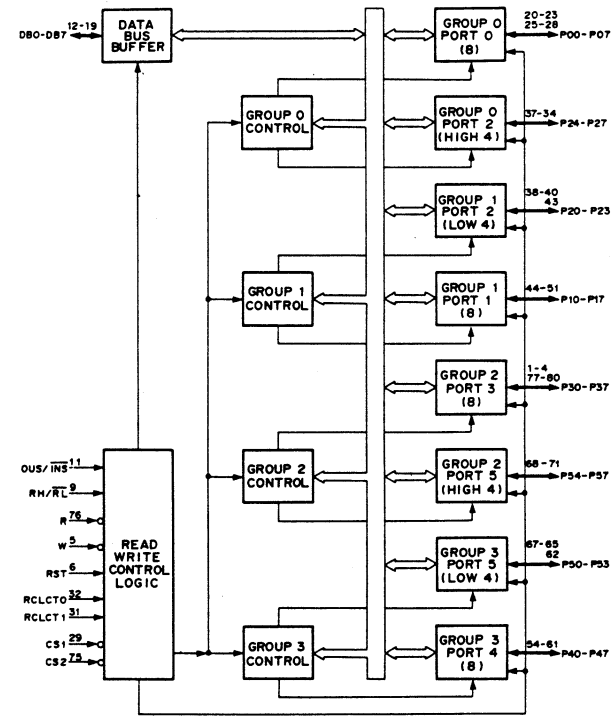

MB89371APF (FUJITSU) FLAT PACKAGE

C-MOS DUAL SERIAL DATA TRANSMITTER/RECEIVER UNIT

– TOP VIEW –

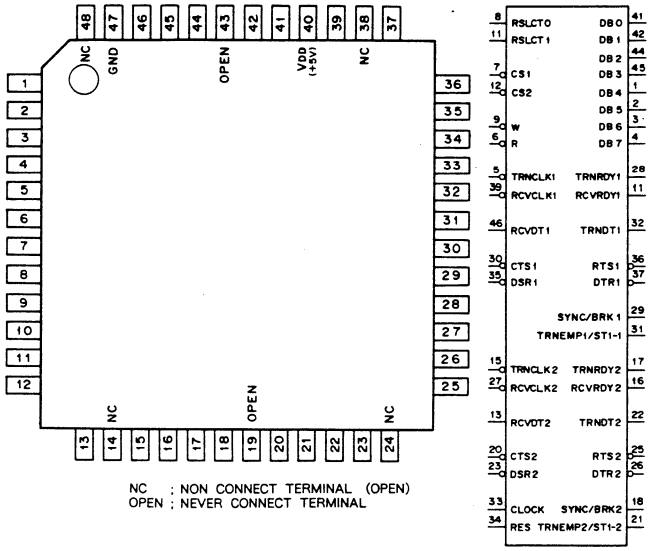

NC ; NON CONNECT TERMINAL (OPEN)
OPEN ; NEVER CONNECT TERMINAL

(V_{DD} = + 5V)

PIN NO.	I/O	SIGNAL	PIN NO.	I/O	SIGNAL	PIN NO.	I/O	SIGNAL
1	I/O	DB4	17	O	TRNRDY2	33	I	CLOCK
2	I/O	DB5	18	I/O	SYNC/BRK2	34	I	RST
3	I/O	DB6	19	–	OPEN	35	I	DSR1
4	I/O	DB7	20	I	CTS2	36	O	RTS1
5	I	TRNCLK1	21	O	TRNEMP2/ST1-2	37	I	DTR1
6	I	W	22	O	TRNDT2	38	–	NC
7	I	CS1	23	O	DSR2	39	I	RCVCLK1
8	I	RSLCT0	24	–	NC	40	–	V_{DD}
9	I	R	25	O	RTS2	41	I/O	DB0
10	O	RCVRDY1	26	O	DTR2	42	I/O	DB1
11	I	RSLCT1	27	I	RCVCLK2	43	–	OPEN
12	I	CS2	28	O	TRNRDY1	44	I/O	DB2
13	I	RCVDT2	29	I/O	SYNC/BRK1	45	I/O	DB3
14	–	NC	30	I	CTS1	46	I	RCVDT1
15	I	TRNCLK2	31	O	TRNEMP1/ST1-1	47	–	GND
16	O	RCVRDY2	32	O	TRNDT1	48	–	NC

INPUT

CLOCK ; CLOCK (4.9152MHz) FOR REFERENCE OF TIMING.
CSn ; CHIP SELECT OF CHANNELn.(n = 1 OR 2)
CTSn ; CLEAR TO SEND OF CHANNELn.(n = 1 OR 2)
DSRn ; DATA SET READY OF CHANNELn.(n = 1 OR 2)
R ; READ ENABLE
RCVCLKn ; RECEIVER CLOCK OF CHANNELn.(n = 1 OR 2)
RCVDTn ; RECEIVE DATA OF CHANNELn. (n = 1 OR 2)
RSLCTn ; REGISTERS SELECT LINEn.(n = 0 AND 1)
RST ; RESET PULSE
TRNCLKn ; TRANSMITTER CLOCK OF CHANNELn.(n = 1 OR 2)
W ; WRITE ENABLE

OUTPUT

DTRn ; DATA TERMINAL READY OF CHANNELn.(n = 1 OR 2)
RCVRDYn ; RECEVIER READY OF CHANNELn.(n = 1 OR 2)
RTSn ; REQUEST TO SEND OF CHANNELn.(n = 1 OR 2)
TRNDTn ; TRANSMIT DATA OF CHANNELn.(n = 1 OR 2)
TRNEMPn/ST1-n ; TRANSMITTER EMPTY/BAUD RATE CLOCK OUT OF CHANNELn.(n = 1 OR 2)
TRNRDYn ; TRANSMIT READY OF CHANNELn.(n = 1 OR 2)

INPUT/OUTPUT

DBn ; DATA BUS LINEn.(n = 0 TO 7)
SYNC/BRKn ; SYNCHRONIZATION CHARACTOR/BREAK CODE DETECT OF CHANNELn.(n = 1 OR 2)

NC ; NON CONNECT TERMINAL (OPEN)
OPEN ; NEVER CONNECT TERMINAL

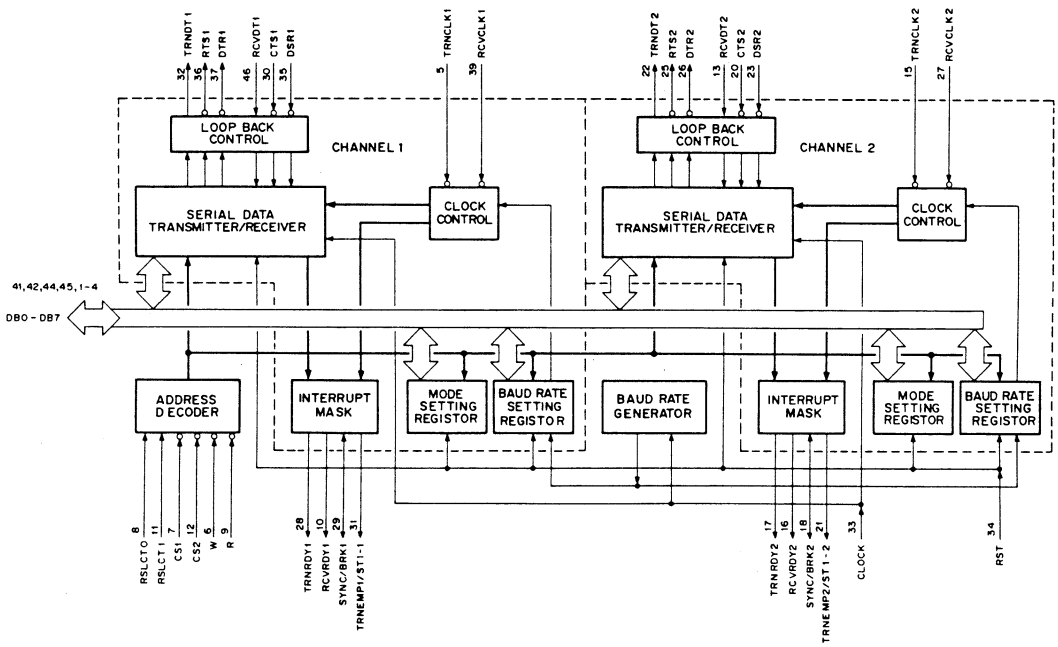

MBM2212-20P (FUJITSU) (ACCESS TIME = 200nS)
X2212P (XICOR) (ACCESS TIME = 300nS)

N-MOS 1024 (256x4)-BIT NONVOLATILE STATIC RAM
– TOP VIEW –

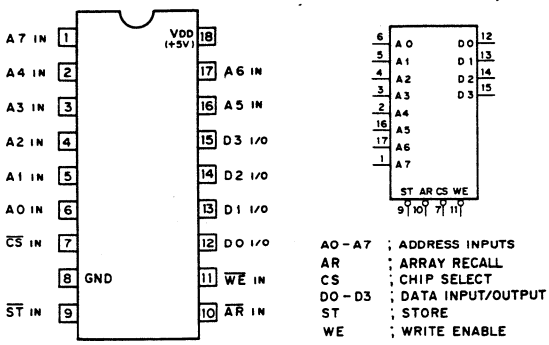

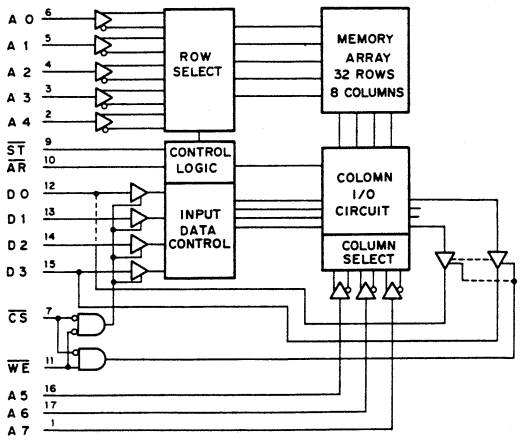

INPUTS				I/O	MODE
$\overline{CS}$	$\overline{WE}$	$\overline{AR}$	$\overline{ST}$		
1	X	1	1	HI-Z	NOT SELECTED
0	1	1	1	OUTPUT DATA	RAM READ
0	0	1	1	INPUT DATA 1	RAM WRITE "1"
0	0	1	1	INPUT DATA 0	RAM WRITE "0"
X	1	0	1	HI-Z	ARRAY RECALL
1	X	0	1	HI-Z	ARRAY RECALL
X	1	1	0	HI-Z	NONVOLATILE STORING
1	X	1	0	HI-Z	NONVOLATILE STORING

0 ; LOW LEVEL
1 ; HIGH LEVEL
X ; DON'T CARE
HI-Z ; HIGH IMPEDANCE

MC10H116M (MOTOROLA) FLAT PACKAGE

ECL DIFFERENTIAL OR/NOR LINE RECEIVER
– TOP VIEW –

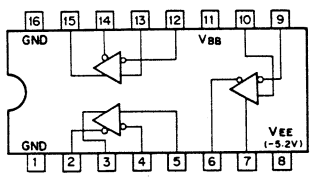

MC10H124L (MOTOROLA)
MC10H124M (MOTOROLA) FLAT PACKAGE

ECL TTL-TO-ECL TRANSLATOR
– TOP VIEW –

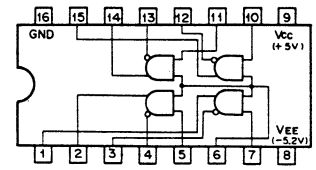

MC10H125L (MOTOROLA)
MC10H125M (MOTOROLA) FLAT PACKAGE

ECL ECL-TO-TTL TRANSLATOR
– TOP VIEW –

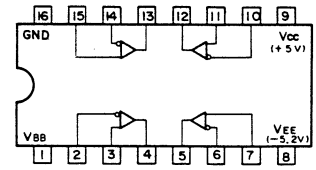

MC14001BCP (MOTOROLA)
MC14001BF (MOTOROLA) FLAT PACKAGE

C-MOS 2-INPUT NOR GATE
– TOP VIEW –

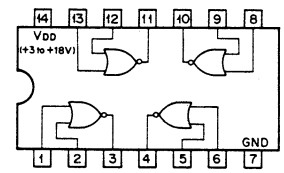

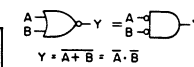

A	B	Y
0	0	1
0	1	0
1	0	0
1	1	0

0 ; LOW LEVEL
1 ; HIGH LEVEL

MC14011BF (MOTOROLA) FLAT PACKAGE

C-MOS 2-INPUT NAND GATE
– TOP VIEW –

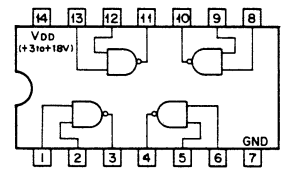

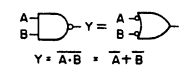

A	B	Y
0	0	1
0	1	1
1	0	1
1	1	0

0:LOW LEVEL
1:HIGH LEVEL

MC14049UBF (MOTOROLA) FLAT PACKAGE
TC4049BF (TOSHIBA) FLAT PACKAGE

C-MOS INVERTING TYPE BUFFER/CONVERTER
– TOP VIEW –

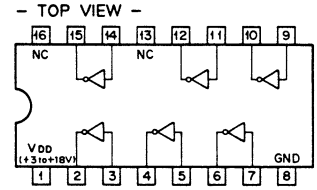

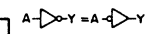

A	Y
0	1
1	0

0 ; LOW LEVEL
1 ; HIGH LEVEL

MC14051BCP (MOTOROLA)

C-MOS 8-CHANNEL ANALOG MULTIPLEXER/DEMULTIPLEXER
- TOP VIEW -

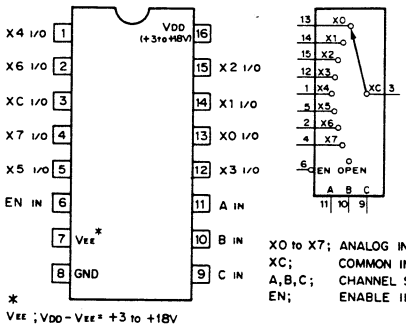

CONTROL INPUTS				SELECTED CHANNEL
EN	SELECT C	B	A	
0	0	0	0	X0
0	0	0	1	X1
0	0	1	0	X2
0	0	1	1	X3
0	1	0	0	X4
0	1	0	1	X5
0	1	1	0	X6
0	1	1	1	X7
1	X	X	X	OPEN

* VEE ; VDD - VEE = +3 to +18V

XO to X7; ANALOG INPUTS/OUTPUTS
XC; COMMON INPUT/OUTPUT
A,B,C; CHANNEL SELECT INPUT
EN; ENABLE INPUT

0; LOW LEVEL
1; HIGH LEVEL
X; DON'T CARE

MC14052BCP (MOTOROLA)
MC14052BF (MOTOROLA) FLAT PACKAGE

C-MOS DUAL 4-CHANNEL ANALOG MULTIPLEXER/DEMULTIPLEXER
- TOP VIEW -

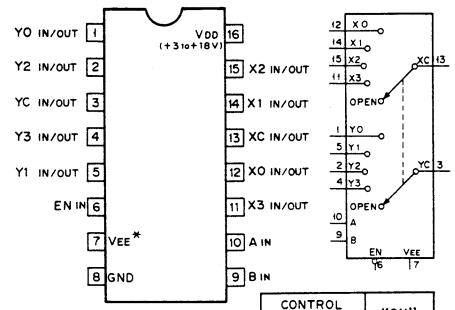

CONTROL INPUTS			"ON" CHANNEL
EN	B	A	
0	0	0	0
0	0	1	1
0	1	0	2
0	1	1	3
1	X	X	OPEN

VEE*; VDD - VEE = +3 to +18V

0; LOW LEVEL
1; HIGH LEVEL
X; DON'T CARE.

MC14520BCP (MOTOROLA)
TC4520BPHB (TOSHIBA)

C-MOS DUAL 4-BIT BINARY UP COUNTER
- TOP VIEW -

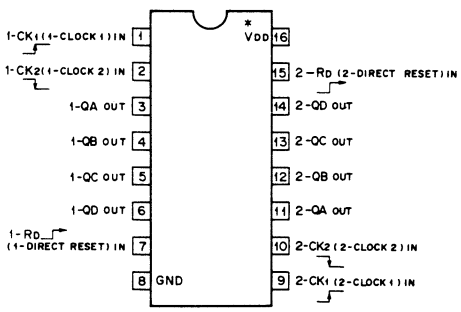

STATE	OUTPUTS QD	QC	QB	QA
0	0	0	0	0
1	0	0	0	1
2	0	0	1	0
3	0	0	1	1
4	0	1	0	0
5	0	1	0	1
6	0	1	1	0
7	0	1	1	1
8	1	0	0	0
9	1	0	0	1
10	1	0	1	0
11	1	0	1	1
12	1	1	0	0
13	1	1	0	1
14	1	1	1	0
15	1	1	1	1

0; LOW LEVEL
1; HIGH LEVEL
X; DON'T CARE

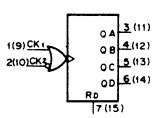

*

TYPE	VDD
HC4520	+2 to +6V
14520, 4520, 84520	+3 to +18V

CK1	CK2	RD	ACTION
↑	1	0	INCREMENT COUNTER
0	↑	0	INCREMENT COUNTER
↓	X	0	NO CHANGE
X	↓	0	NO CHANGE
↑	0	0	NO CHANGE
1	↓	0	NO CHANGE
X	X	1	QA THRU QD = 0

MC14538BCP (MOTOROLA)
MC14538BF (MOTOROLA) FLAT PACKAGE

C-MOS DUAL RETRIGGERABLE MONOSTABLE MULTIVIBRATOR
- TOP VIEW -

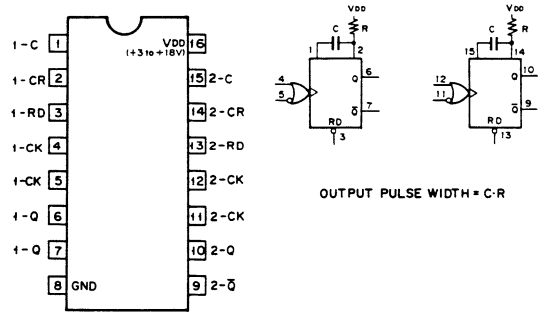

OUTPUT PULSE WIDTH = C·R

RETRIGGERABLE M.M.V

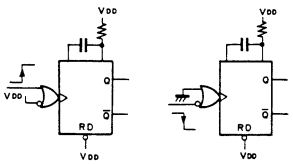

NON-RETRIGGERABLE M.M.V

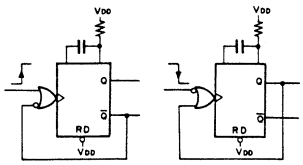

MC34050P (MOTOROLA)

RS-422 LINE DRIVER/RECEIVER
- TOP VIEW -

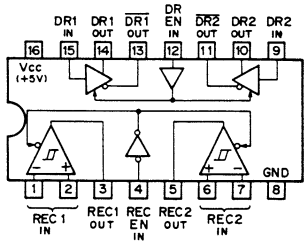

DRIVER

DR IN	EN	DR OUT	DR OUT
0	1	0	1
1	1	1	0
X	0	HI-Z	HI-Z

RECEIVER

REC IN	EN	RECOUT
>+0.2V DIFF	0	1
<-0.2V DIFF	0	0
X	1	HI-Z

0; LOW LEVEL
1; HIGH LEVEL
X; DON'T CARE
HI-Z; HIGH IMPEDANCE

MC3486M (MOTOROLA) FLAT PACKAGE

QUAD RS-422/423 LINE RECEIVER WITH 3-STATE OUTPUTS
- TOP VIEW -

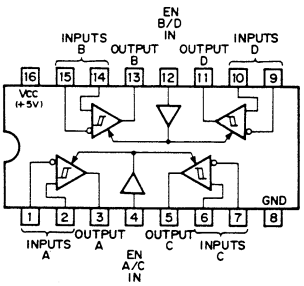

MC68020RC16 (MOTOROLA) (CLOCK FREQUENCY : 16MHz)

32-BIT MICROPROCESSOR

– BOTTOM VIEW –

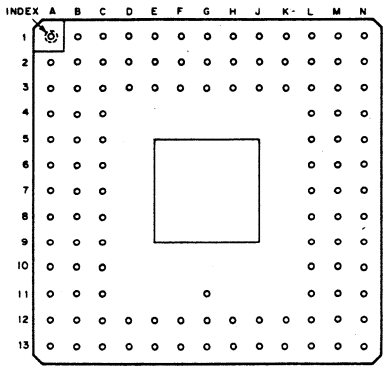

V_{DD} = + 2 to + 6V

PIN NO.	I/O	SYMBOL	PIN NO.	I/O	SYMBOL	PIN NO.	I/O	SYMBOL	PIN NO.	I/O	SYMBOL
1A	I	BGACK	3D	–	V_{DD}	7B	O	A20	11N	I/O	D9
1B	–	GND	3E	–	V_{DD}	7C	O	A21	12A	O	A11
1C	I/O	RESET	3F	O	FC1	7L	–	GND	12B	O	A10
1D	–	V_{DD}	3G	O	DBEN	7M	I/O	D16	12C	O	A7
1E	O	FC0	3H	I	DSACK0	7N	–	GND	12D	O	A4
1F	O	SIZ0	3J	–	GND	8A	O	A19	12E	O	A2
1G	O	ECS	3K	–	GND	8B	O	A18	12F	–	GND
1H	I	CDIS	3L	I/O	D30	8C	O	A17	12G	–	GND
1J	I	DSACK1	3M	I/O	D26	8L	I/O	D15	12H	I	IPL2
1K	–	GND	3N	I/O	D25	8M	–	V_{DD}	12J	I	IPL0
1L	O	AS	4A	O	A28	8N	–	V_{DD}	12K	I/O	D1
1M	O	DS	4B	O	A30	9A	–	V_{DD}	12L	I/O	D3
1N	I/O	D31	4C	O	A0	9B	–	GND	12M	I/O	D5
2A	O	A1	4L	I/O	D27	9C	O	A16	12N	I/O	D8
2B	O	BG	4M	I/O	D24	9L	I/O	D11	13A	O	A8
2C	I	CLK	4N	I/O	D22	9M	I/O	D13	13B	O	A6
2D	–	V_{DD}	5A	O	A26	9N	I/O	D14	13C	O	A5
2E	O	RMC	5B	O	A27	10A	–	GND	13D	O	A3
2F	O	FC2	5C	O	A29	10B	O	A15	13E	O	OCS
2G	O	SIZ1	5L	I/O	D23	10C	O	A12	13F	O	IPEND
2H	I	AVEC	5M	I/O	D21	10L	I/O	D7	13G	–	V_{DD}
2J	I	BERR	5N	I/O	D20	10M	I/O	D10	13H	–	GND
2K	I/O	HALT	6A	O	A23	10N	I/O	D12	13J	I	IPL1
2L	O	R/$\overline{W}$	6B	O	A24	11A	O	A14	13K	I/O	D0
2M	I/O	D29	6C	O	A25	11B	O	A13	13L	I/O	D2
2N	I/O	D28	6L	I/O	D19	11C	O	A9	13M	I/O	D4
3A	O	A31	6M	I/O	D18	11G	–	V_{DD}	13N	–	V_{DD}
3B	I	BR	6N	I/O	D17	11L	–	GND			
3C	–	GND	7A	O	A22	11M	I/O	D6			

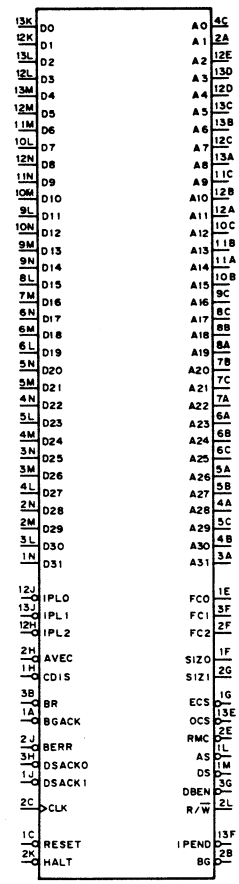

INPUT

AVEC : AUTOVECTOR
BERR : BUS ERROR
BGACK : BUS GRANT ACKNOWLEDGE
BR : BUS REQUEST
CDIS : CACHE DISABLE CONTROL
CLK : CLOCK
DSACK0, DSACK1 : DATA TRANSFER AND SIZE ACKNOWLEDGE
IPL0 – IPL2 : INTERRUPT PRIORITY CONTROL

OUTPUT

A0 – A31 : ADDRESS BUS
AS : ADDRESS STROBE
BG : BUS GRANT
DBEN : DATA BUFFER ENABLE
DS : DATA STROBE
ECS : EXTERNAL CYCLE START
FC0 – FC2 : FUNCTION CODE SIGNALS
IPEND : INTERRUPT PENDING
OCS : OPERAND CYCLE START
R/$\overline{W}$: READ/WRITE
RMC : READ-MODIFY-WRITE CYCLE
SIZ0 – SIZ1 : TRANSFER SIZE

INPUT/OUTPUT

D0 – D31 : DATA BUS
HALT : HALT
RESET : RESET

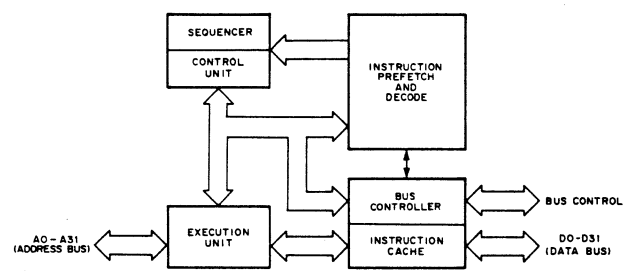

MC68681P (MOTOROLA)

N-MOS DUAL ASYNCHRONOUS RECEIVER/TRANSMITTER
– TOP VIEW –

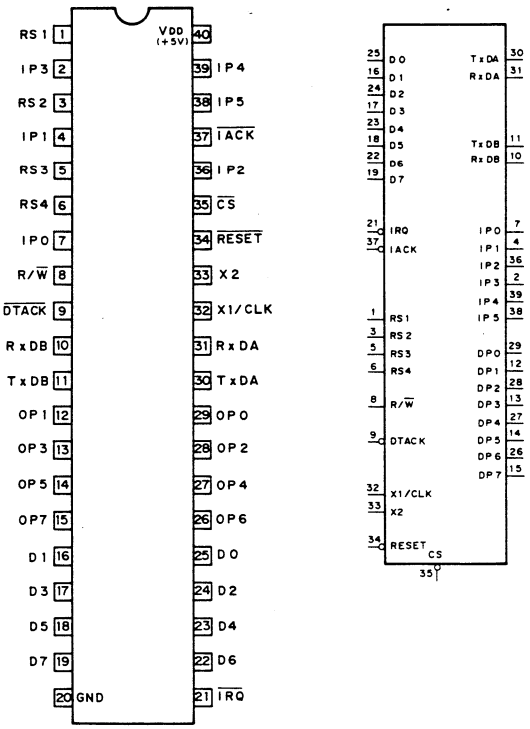

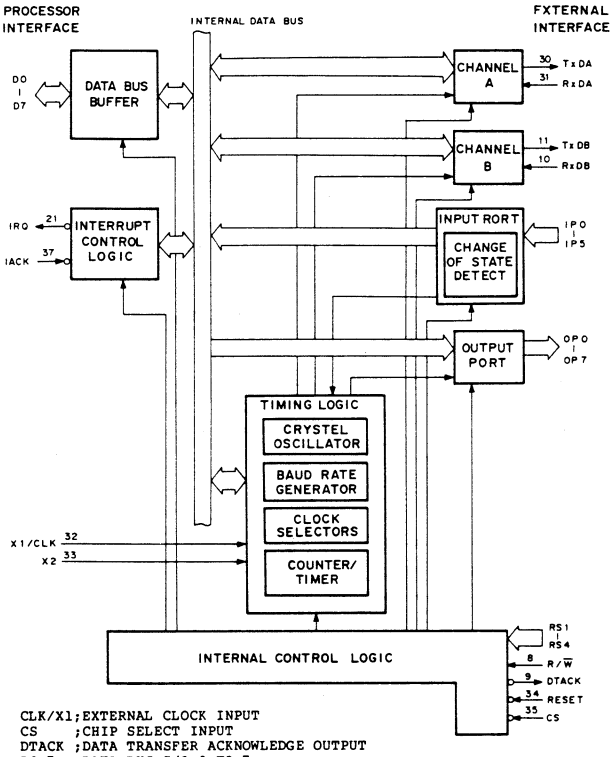

CLK/X1;EXTERNAL CLOCK INPUT
CS ;CHIP SELECT INPUT
DTACK ;DATA TRANSFER ACKNOWLEDGE OUTPUT
D0-7 ;DATA BUS I/O 0 TO 7
IACK ;INTERRUPT ACKNOWLEDGE INPUT
IP0-5 ;PARALLEL INPUT 0 TO 5
IRQ ;INTERRUPT REQUEST OUTPUT
OP0-7 ;PARALLEL OUTPUT 0 TO 7
RS1-4 ;RESISTER SELECT BUS INPUT 1 TO 4
R/W ;READ OR WRITE INPUT
RXDA,B;RECEIVER SERIAL DATA INPUT A, B
TXDA,B;TRANSMITTER SERIAL DATA OUTPUT A, B
X1,2 ;CRYSTAL INPUT

MC74HC4051F (MOTOROLA) FLAT PACKAGE

C-MOS 8-CHANNEL ANALOG MULTIPLEXER/DEMULTIPLEXER
– TOP VIEW –

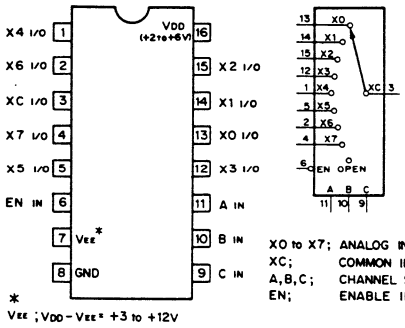

CONTROL INPUTS				SELECTED CHANNEL
EN	SELECT			
	C	B	A	
0	0	0	0	X0
0	0	0	1	X1
0	0	1	0	X2
0	0	1	1	X3
0	1	0	0	X4
0	1	0	1	X5
0	1	1	0	X6
0	1	1	1	X7
1	X	X	X	OPEN

0; LOW LEVEL
1; HIGH LEVEL
X; DON'T CARE

XO to X7; ANALOG INPUTS/OUTPUTS
XC; COMMON INPUT/OUTPUT
A,B,C; CHANNEL SELECT INPUT
EN; ENABLE INPUT

* VEE ; VDD – VEE = +3 to +12V

MC74HC4052F (MOTOROLA) FLAT PACKAGE

C-MOS DUAL 4-CHANNEL ANALOG MULTIPLEXER/DEMULTIPLEXER
– TOP VIEW –

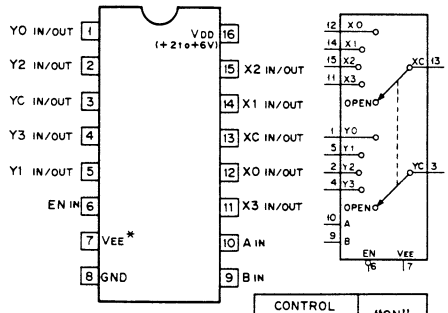

VEE* ; VDD – VEE = +3 to +12 V

CONTROL INPUTS			"ON" CHANNEL
EN	B	A	
0	0	0	0
0	0	1	1
0	1	0	2
0	1	1	3
1	X	X	OPEN

0; LOW LEVEL
1; HIGH LEVEL
X; DON'T CARE.

MC74HC4053F (MOTOROLA) FLAT PACKAGE
TC74HC4053AF (TOSHIBA) FLAT PACKAGE

C-MOS TRIPLE 2-CHANNEL ANALOG MULTIPLEXER/DEMULTIPLEXER
– TOP VIEW –

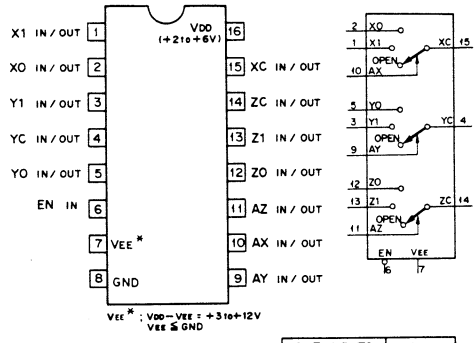

VEE* ; VDD – VEE = +3 to +12V
VEE ≦ GND

CONT. INPUTS		ON CHANNEL
EN	A (X,Y,Z,)	
0	0	0
0	1	1
1	X	OPEN

0; LOW LEVEL
1; HIGH LEVEL
X; DON'T CARE.

MP6901 (TOSHIBA)

POWER TRANSISTOR ARRAY
– PRINTED SIDE VIEW –

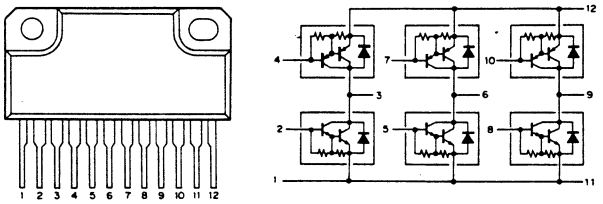

NE527N (SIGNETICS)

VOLTAGE COMPARATOR
– TOP VIEW –

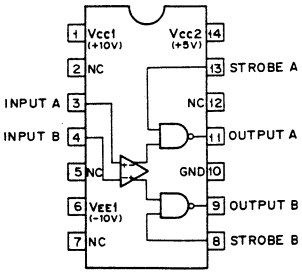

OUTPUT A IS IN PHASE WITH INPUT A.
OUTPUT B IS IN PHASE WITH INPUT B.

PC627 (SHARP)

TTL-PHOTOELECTRIC CELL
– TOP VIEW –

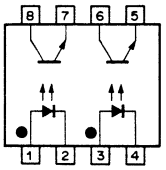

NJM79L09A (JRC) – 9V (100 mA)
RC79L05A (RAYTHEON) – 5V
RC79L06A (RAYTHEON) – 6V
RC79L09A (RAYTHEON) – 9V

NEGATIVE VOLTAGE REGULATOR (100mA)

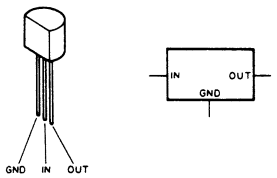

PCM58P-J (BURR-BROWN)

18-BIT AUDIO SERIAL D/A CONVERTER
– TOP VIEW –

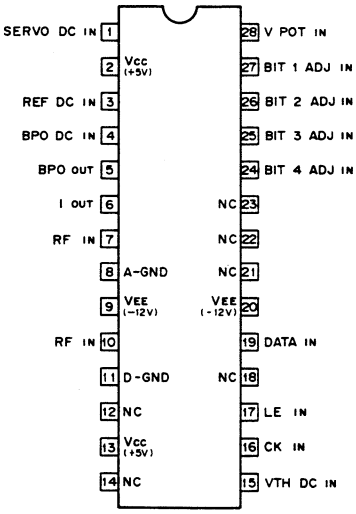

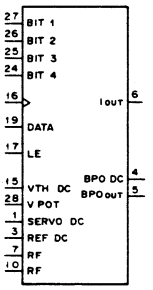

INPUT

BIT 1 – 4 ADJ	: BIT 1 – 4 ADJUST
BPO DC	: OFFSET FILTER
CK	: CLOCK
DATA	: DATA
LE	: LATCH ENABLE
REF DC	: REFERENCE FILTER
RF	: FEEDBACK RESISTER
SERVO DC	: SERVO FILTER
V POT	: V TRIM
VTH DC	: VTH FILTER

OUTPUT

BPO	: BIPOLAR OFFSET
I	: CURRENT

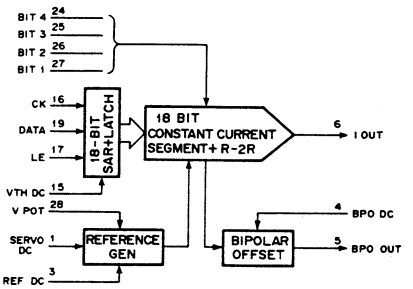

PCM56P-K (BURR-BROWN)

SERIAL INPUT D/A CONVERTER FOR DIGITAL AUDIO
– TOP VIEW –

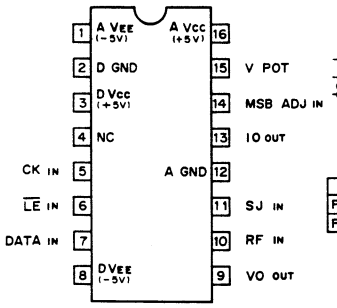

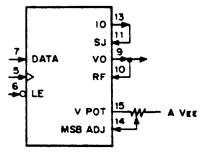

TYPE	BIT
PCM56P-K	16
PCM61P-K	18

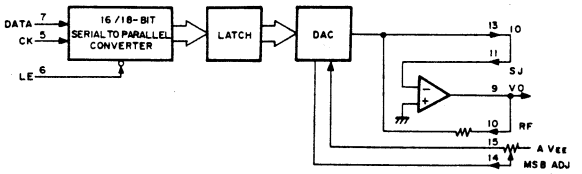


```
  DATA ; SERIAL DATA INPUT MSB FIRST
         BINARY 2's COMPLEMENT
    CK ; CLOCK INPUT, ↓
    LE ; LATCH ENABLE, ↓
    IO ; CURRENT OUTPUT
    SJ ; SUMMING JUNCTION
    VO ; VOLTAGE OUTPUT
    RF ; FEEDBACK RESISTOR
  VPOT ; MSB TRIM POTENTIOMETER
MSB ADJ ; MSB ADJUSTMENT
```

DIGITAL INPUT BTC (HEX)		ANALOG OUTPUTS		
PCM56P-K	PCM61-K	DAC OUTPUT	VO (V)	IO (mA)
7FFF	7FFFFF	+FULL SCALE	+2.999908	–0.999970
8000	80003F	–FULL SCALE	–3.000000	+1.000000
0000	00003F	BIPOLAR ZERO	0.000000	0.000000
FFFF	FFFFFF	ZERO-1LSB	–0.000092	+0.030500 μA

BTC : BINARY TWO'S COMPLEMENT

RP5C15 (RICOH)

C-MOS REAL TIME CLOCK
– TOP VIEW –

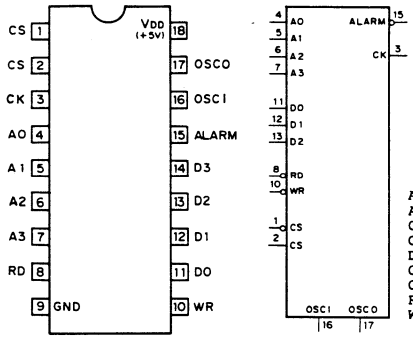

A0–A3 ; ADDRESS BUS IN
ALARM ; ALARM OUT
CK ; CLOCK OUT
CS ; CHIP SELECT IN
D0–D3 ; DATA BUS IN/OUT
OSCI ; CRYSTAL/CLOCK IN
OSCO ; CRYSTAL/CLOCK OUT
RD ; READ STROBE IN
WR ; WRITE STROBE IN

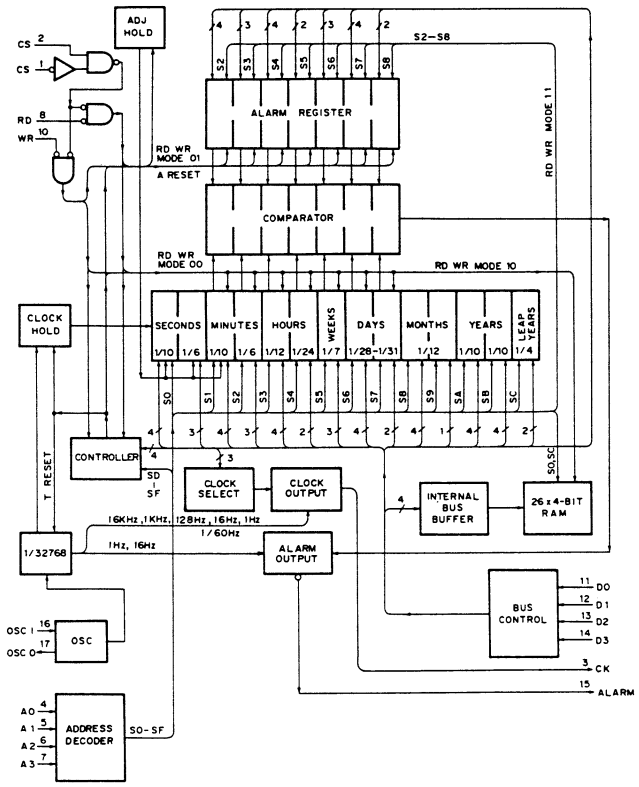

SBX1601A (SONY)

8- OR 10-BIT PARALLEL-TO-SERIAL CONVERTER
– TOP VIEW –

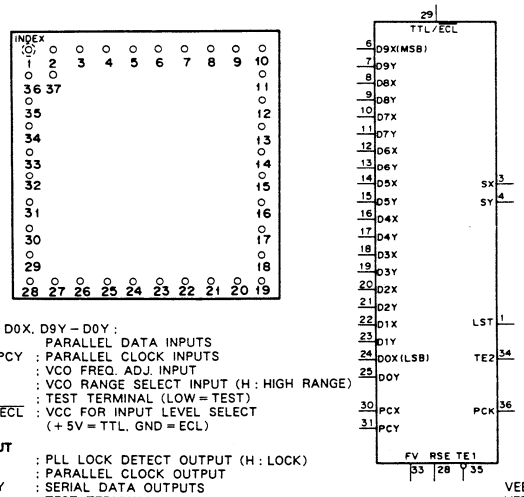

INPUT
D9X – D0X, D9Y – D0Y :
PARALLEL DATA INPUTS
PCX, PCY : PARALLEL CLOCK INPUTS
FV : VCO FREQ. ADJ. INPUT
RSE : VCO RANGE SELECT INPUT (H : HIGH RANGE)
TE1 : TEST TERMINAL (LOW = TEST)
TTL/ECL : VCC FOR INPUT LEVEL SELECT
(+5V = TTL, GND = ECL)

OUTPUT
LST : PLL LOCK DETECT OUTPUT (H : LOCK)
PCK : PARALLEL CLOCK OUTPUT
SX, SY : SERIAL DATA OUTPUTS
TE2 : TEST TERMINAL

VEE1 = – 5V
VEE2 = – 3.5V

PIN NO.	I/O	SIGNAL	PIN NO.	I/O	SIGNAL	PIN NO.	I/O	SIGNAL	PIN NO.	I/O	SIGNAL
1	O	LST	11	I	D7Y	21	I	D2Y	31	I	PCY
2	–	GND	12	I	D6X	22	I	D1X	32	–	GND
3	O	SX	13	I	D6Y	23	I	D1Y	33	I	FV
4	O	SY	14	I	D5X	24	I	D0X(LSB)	34	O	TE2
5	–	GND	15	I	D5Y	25	I	D0Y	35	I	TE1
6	I	D9X(MSB)	16	I	D4X	26	–	VEE1	36	O	PCK
7	I	D9Y	17	I	D4Y	27	–	VEE2	37	–	NC
8	I	D8X	18	I	D3X	28	I	RSE			
9	I	D8Y	19	I	D3Y	29	–	TTL/ECL			
10	I	D7X	20	I	D2X	30	I	PCX			

SBX1602A (SONY)

8- OR 10-BIT SERIAL-TO-PARALLEL CONVERTER
– BOTTOM VIEW –

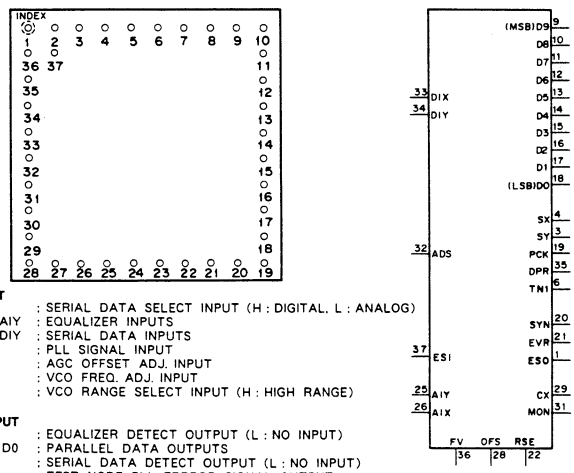

INPUT
ADS : SERIAL DATA SELECT INPUT (H : DIGITAL, L : ANALOG)
AIX, AIY : EQUALIZER INPUTS
DIX, DIY : SERIAL DATA INPUTS
ESI : PLL SIGNAL INPUT
OFS : AGC OFFSET ADJ. INPUT
FV : VCO FREQ. ADJ. INPUT
RSE : VCO RANGE SELECT INPUT (H : HIGH RANGE)

OUTPUT
CX : EQUALIZER DETECT OUTPUT (L : NO INPUT)
D9 – D0 : PARALLEL DATA OUTPUTS
DPR : SERIAL DATA DETECT OUTPUT (L : NO INPUT)
ESO : TEST NODE PLL ERRROR SIGNAL OUTPUT
EVR : REFERENCE VOLTAGE FOR PARALLEL OUTPUT
MON : EQUALIZER MONITOR OUTPUT
PCK : PARALLEL CLOCK OUTPUT
SX, SY : SERIAL DATA OUTPUTS
SYN : TRS DETECT OUTPUT
TN1 : TEST TERMINAL

VEE1, 3 = – 5V
VEE2 = – 3.5V

PIN NO.	I/O	SIGNAL	PIN NO.	I/O	SIGNAL	PIN NO.	I/O	SIGNAL	PIN NO.	I/O	SIGNAL
1	O	ESO	11	O	D7	21	O	EVR	31	O	MON
2	–	GND	12	O	D6	22	I	RSE	32	I	ADS
3	O	SY	13	O	D5	23	–	VEE3	33	I	DIX
4	O	SX	14	O	D4	24	–	GND	34	I	DIY
5	–	GND	15	O	D3	25	I	AIY	35	O	DPR
6	O	TN1	16	O	D2	26	I	AIX	36	I	FV
7	–	VEE1	17	O	D1	27	–	GND	37	I	ESI
8	–	VEE2	18	O	D0(LSB)	28	I	OFS			
9	O	D9(MSB)	19	O	PCK	29	O	CX			
10	O	D8	20	O	SYN	30	–	GND			

SM5813APT (NPC)

C-MOS AUDIO DIGITAL FILTER
- TOP VIEW -

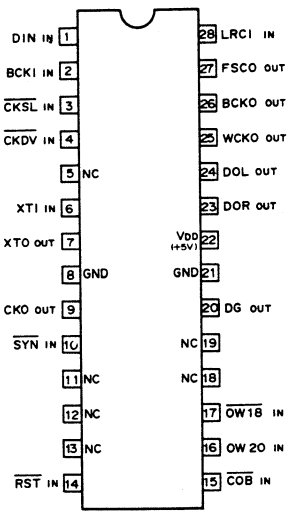

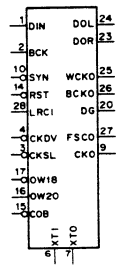

INPUT

BCKI	; INPUT DATA BIT CLOCK
CKDV, CKSL	; SYSTEM CLOCK SELECT
COB	; 2'S COMPLEMENT/COB SELECT (H : 2'S COMPLEMENT, L : COB)
DIN	; INPUT DATA
LRCI	; SYSTEM CLOCK (H : L-CH, L : R-CH)
OW18, 20	; OUTPUT BIT NUMBER SELECT

OUTPUT BIT	16	18	20
OW18	H	L	H
OW20	H	H	L

RST	; SYSTEM RESET (H : NORMAL, L : SYSTEM RESET)
SYN	; JITTER FREE/FORCED SYNCHRONIZATION SELECT (H : JITTER FREE, L : FORCED SYNCHRONIZATION)
XTI	; OSCILLATOR

XTI	125fs	256fs	384fs	512fs
CKSL	H	L	H	L
CKDV	H	H	L	L

OUTPUT

BCKO	; OUTPUT DATA BIT CLOCK
CKO	; SYSTEM CLOCK
DG	; DEGLITCH CONTROL CLOCK
DOL, DOR	; L, R DATA
FSCO	; DATA SAMPLING CLOCK
WCKO	; OUTPUT WORD CLOCK
XTO	; OSCILLATOR

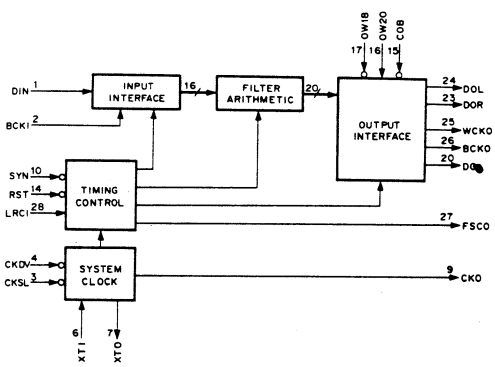

SN74ALS112ANS (TI) FLAT PACKAGE

TTL J-K FLIP-FLOP WITH DIRECT SET/RESET
- TOP VIEW -

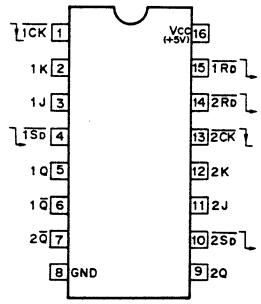

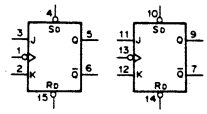

INPUTS					OUTPUTS	
SD	RD	CK	J	K	Qn+1	Q̄n+1
0	1	X	X	X	1	0
1	0	X	X	X	0	1
0	0	X	X	X	1*	1*
1	1	↓	0	0	Qn	Q̄n
			0	1	0	1
			1	0	1	0
			1	1	Q̄n	Qn
1	1	1	X	X	Qn	Q̄n

0; LOW LEVEL X; DON'T CARE
1; HIGH LEVEL *; NONSTABLE

SN74ALS874BNT (TI)
SN74ALS874NT (TI)

TTL DUAL 4-BIT D-TYPE EDGE-TRIGGERED FLIP-FLOPS
- TOP VIEW -

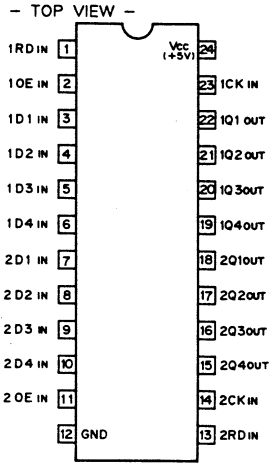

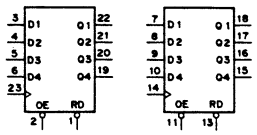

INPUTS				OUTPUT
OE	RD	CK	D	Q
0	0	X	X	0
0	1	↓	1	1
0	1	↓	0	0
0	1	0	X	Q0
1	X	X	X	HI-Z

0; LOW LEVEL
1; HIGH LEVEL
X; DON'T CARE
HI-Z; HIGH IMPEDANCE

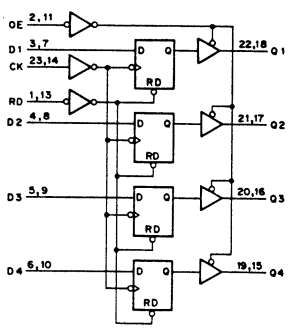

SN74HC00AN (TI)
SN74HC00ANS (TI) FLAT PACKAGE

C-MOS QUAD 2-INPUT NAND GATE
- TOP VIEW -

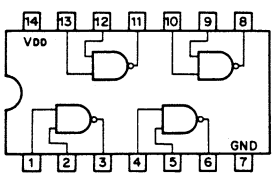

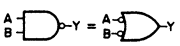

$Y = \overline{A \cdot B} = \bar{A} + \bar{B}$

A	B	Y
0	0	1
0	1	1
1	0	1
1	1	0

0; LOW LEVEL
1; HIGH LEVEL

NOTE :

TYPE	VDD
TC74AC00P TC74AC00F	+2 to +5.5V
MC74HCT00N 74ACT00PC	+5V
OTHER TYPES	+2 to +6V

SN74HC03NS (TI) FLAT PACKAGE

C-MOS 2-INPUT POSITIVE-NAND GATE WITH OPEN-DRAIN
- TOP VIEW -

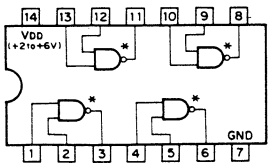

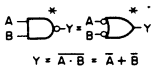

A	B	Y
0	0	HI-Z
0	1	HI-Z
1	0	HI-Z
1	1	0

0;LOW LEVEL
1;HIGH LEVEL
HI-Z;HIGH IMPEDANCE

SN74HC05AN (TI)
SN74HC05ANS (TI) FLAT PACKAGE

C-MOS HEX INVERTER WITH OPEN-DRAIN
- TOP VIEW -

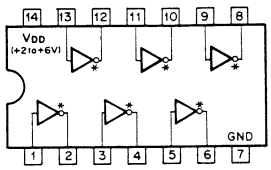

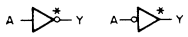

Y = $\overline{A}$

A	Y
0	1
1	0

0;LOW LEVEL
1;HIGH LEVEL
*;OPEN DRAIN

SN74HC107N (TI)

C-MOS DUAL J-K FLIP-FLOPS
- TOP VIEW -

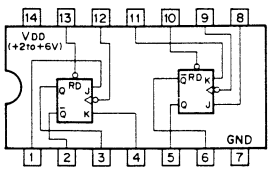

INPUT				OUTPUT
RD	CK	J	K	Q
0	X	X	X	0
1	↓	0	0	NO CHANGE
1	↓	1	0	1
1	↓	0	1	0
1	↓	1	1	TOGGLE

0 : LOW LEVEL
1 : HIGH LEVEL
X : DON'T CARE

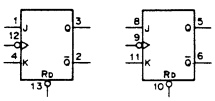

MC74HC109N (MOTOROLA)
SN74HC109N (TI)

C-MOS J-K FLIP-FLOP WITH DIRECT SET/RESET
- TOP VIEW -

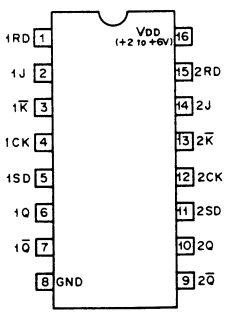

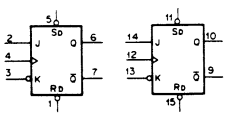

INPUTS					OUTPUTS	
SD	RD	CK	J	K̄	Qn+1	Qn+1
0	1	X	X	X	1	0
1	0	X	X	X	0	1
0	0	X	X	X	1*	1*
1	1	↓	0	1	Qn	$\overline{Qn}$
			0	0	0	1
			1	1	1	0
			1	0	$\overline{Qn}$	Qn
1	1	0	X	X	Qn	$\overline{Qn}$

0;LOW LEVEL
1;HIGH LEVEL
X;DON'T CARE
*;NONSTABLE

SN74HC10AN (TI)

C-MOS 3-INPUT NAND GATE
- TOP VIEW -

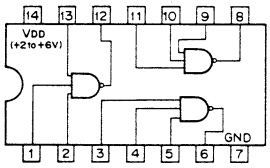

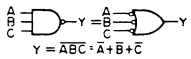

A	B	C	Y
0	0	0	1
0	0	1	1
0	1	0	1
0	1	1	1
1	0	0	1
1	0	1	1
1	1	0	1
1	1	1	0

0 : LOW LEVEL
1 : HIGH LEVEL

SN74HC11AN (TI)
SN74HC11N (TI)

C-MOS 3-INPUT POSITIVE-AND GATE

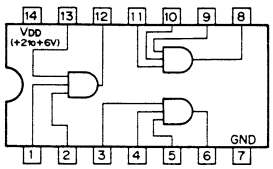

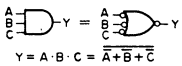

A	B	C	Y
0	0	0	0
0	0	1	0
0	1	0	0
0	1	1	0
1	0	0	0
1	0	1	0
1	1	0	0
1	1	1	1

0;LOW LEVEL
1;HIGH LEVEL

SN74HC125AN (TI)
SN74HC125N (TI)
SN74HC125NS (TI) FLAT PACKAGE

C-MOS BUS BUFFER GATES WITH 3-STATE OUTPUT
- TOP VIEW -

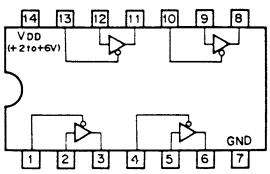

G	A	Y
0	0	0
0	1	1
1	X	HI-Z

0;LOW LEVEL X;DON'T CARE
1;HIGH LEVEL HI-Z;HIGH IMPEDANCE

SN74HC126AN (TI)
SN74HC126N (TI)

C-MOS BUS BUFFER GATE WITH 3-STATE OUTPUT
- TOP VIEW -

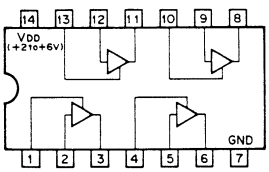

G	A	Y
1	1	1
1	0	0
0	X	HI-Z

0;LOW LEVEL
1;HIGH LEVEL
X;DON'T CARE
HI-Z;HIGH IMPEDANCE

SN74HC133N (TI)
SN74HC133NS (TI) FLAT PACKAGE

C-MOS 13-INPUT NAND GATE
- TOP VIEW -

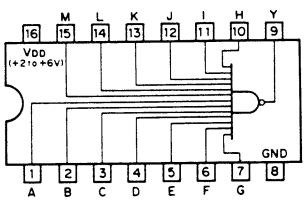

Y = $\overline{A \cdot B \cdot C \cdot D \cdot E \cdot F \cdot G \cdot H \cdot I \cdot J \cdot K \cdot L \cdot M}$

SN74HC138AN (TI)
SN74HC138ANS (TI) FLAT PACKAGE

C-MOS 3-TO-8 LINE DECODER/DEMULTIPLEXER
– TOP VIEW –

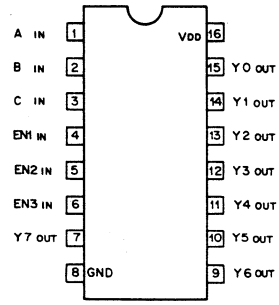

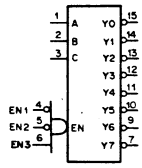

INPUTS				OUTPUTS							
EN	C	B	A	Y7	Y6	Y5	Y4	Y3	Y2	Y1	Y0
0	X	X	X	1	1	1	1	1	1	1	1
1	0	0	0	1	1	1	1	1	1	1	0
1	0	0	1	1	1	1	1	1	1	0	1
1	0	1	0	1	1	1	1	1	0	1	1
1	0	1	1	1	1	1	1	0	1	1	1
1	1	0	0	1	1	1	0	1	1	1	1
1	1	0	1	1	1	0	1	1	1	1	1
1	1	1	0	1	0	1	1	1	1	1	1
1	1	1	1	0	1	1	1	1	1	1	1

$EN = \overline{EN1} \cdot \overline{EN2} \cdot EN3$

0 ; LOW LEVEL
1 ; HIGH LEVEL
X ; DON'T CARE

NOTE :

TYPE	VDD
74AC/74HC	+2 to +6V
74ACT/74HCT	+5V
TC74AC138	+2 to +5.5V

SN74HC139AN (TI)
SN74HC139ANS (TI) FLAT PACKAGE

C-MOS DUAL 2-TO-4 DECODER/DEMULTIPLEXER
– TOP VIEW –

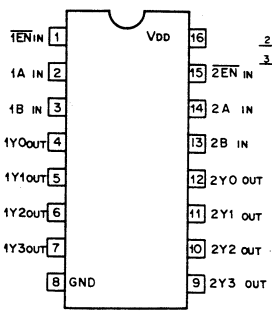

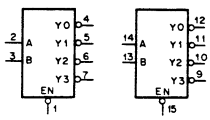

INPUTS			OUTPUTS			
EN	B	A	Y3	Y2	Y1	Y0
0	0	0	1	1	1	0
0	0	1	1	1	0	1
0	1	0	1	0	1	1
0	1	1	0	1	1	1
1	X	X	1	1	1	1

0 ; LOW LEVEL
1 ; HIGH LEVEL
X ; DON'T CARE

NOTE :

TYPE	VDD
74AC/74HC	+2 to +6V
74ACT	+5V
TC74AC139	+2 to +5.5V

SN74HC148ANS (TI) FLAT PACKAGE
SN74HC148N (TI)
SN74HC148NS (TI) FLAT PACKAGE

C-MOS 8-TO-3-LINE PRIORITY ENCODER
– TOP VIEW –

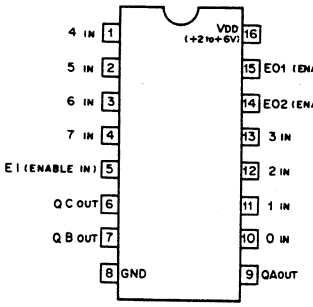

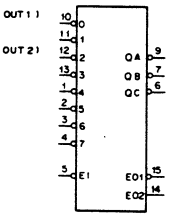

INPUTS									OUTPUTS				
EI	7	6	5	4	3	2	1	0	QC	QB	QA	EO1	EO2
1	X	X	X	X	X	X	X	X	1	1	1	1	1
0	1	1	1	1	1	1	1	1	1	1	1	0	1
0	1	1	1	1	1	1	1	0	1	1	1	1	0
0	1	1	1	1	1	1	0	X	1	1	0	1	0
0	1	1	1	1	1	0	X	X	1	0	1	1	0
0	1	1	1	1	0	X	X	X	1	0	0	1	0
0	1	1	1	0	X	X	X	X	0	1	1	1	0
0	1	1	0	X	X	X	X	X	0	1	0	1	0
0	1	0	X	X	X	X	X	X	0	0	1	1	0
0	0	X	X	X	X	X	X	X	0	0	0	1	0

0;LOW LEVEL 1;HIGH LEVEL X;DON'T CARE

SN74HC14AN (TI)
SN74HC14ANS (TI) FLAT PACKAGE

C-MOS SCHMITT TRIGGER INVERTER
– TOP VIEW –

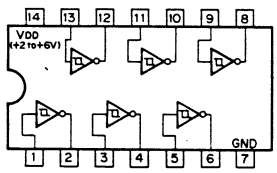

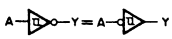

$Y = \overline{A}$

A	Y
0	1
1	0

0;LOW LEVEL
1;HIGH LEVEL

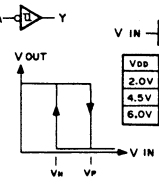

VDD	VN	VP
2.0V	0.75V	1.25V
4.5V	1.9V	2.7V
6.0V	2.6V	3.6V

NOTE :

TYPE	VDD
74AC/74HC	+2 to +6V
TC74AC14	+2 to +5.5V

SN74HC151AN (TI)

C-MOS 8-LINE-TO-1-LINE DATA SELECTOR/MULTIPLEXER
– TOP VIEW –

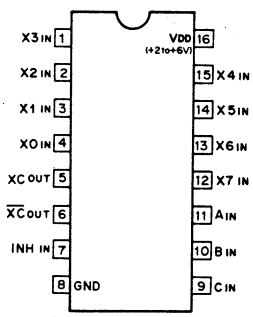

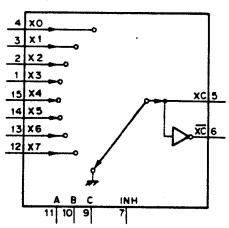

CONTROL INPUTS				ON CHANNEL
INH	C	B	A	
0	0	0	0	0
0	0	0	1	1
0	0	1	0	2
0	0	1	1	3
0	1	0	0	4
0	1	0	1	5
0	1	1	0	6
0	1	1	1	7
1	X	X	X	GND

0;LOW LEVEL
1;HIGH LEVEL
X;DON'T CARE

SN74HC153AN (TI)

C-MOS DUAL 4-LINE-TO-1-LINE DATA SELECTOR/MULTIPLEXER
– TOP VIEW –

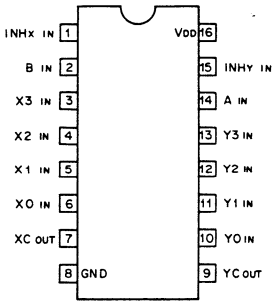

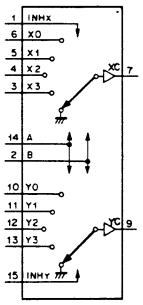

TYPE	VDD
EXCEPT FOL. TYPE	+2 to +6V
74ACT153PC 74ACT153SJ	+5V
TC74AC153P	+2 to +5.5V

CONTROL IN			ON CHANNEL
INH	B	A	
0	0	0	0
0	0	1	1
0	1	0	2
0	1	1	3
1	X	X	GND

0 ; LOW LEVEL
1 ; HIGH LEVEL
X ; DON'T CARE

SN74HC157AN (TI)
SN74HC157ANS (TI) FLAT PACKAGE

C-MOS QUAD 2-LINE-TO-1-LINE DATA SELECTOR/MULTIPLEXER
– TOP VIEW –

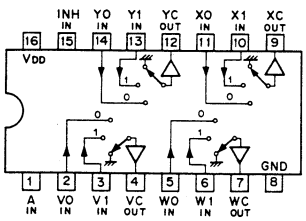

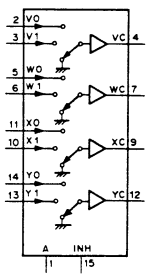

NOTE :

TYPE	VDD
74ACT157	+5V
TC74AC157P TC74AC157F	+2 to +5.5V
OTHER TYPES	+2 to +6V

CONT. IN		ON CHANNEL
INH	A	
0	0	0
0	1	1
1	X	GND

0 ; LOW LEVEL
1 ; HIGH LEVEL
X ; DON'T CARE

SN74HC368ANS (TI) FLAT PACKAGE

C-MOS BUS INVERTER WITH 3-STATE OUTPUTS
– TOP VIEW –

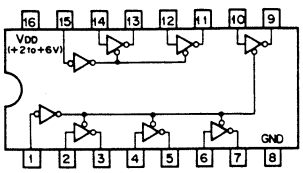

G	A	Y
0	0	1
0	1	0
1	X	HI-Z

0 ; LOW LEVEL
1 ; HIGH LEVEL
X ; DON'T CARE
HI-Z ; HIGH IMPEDANCE

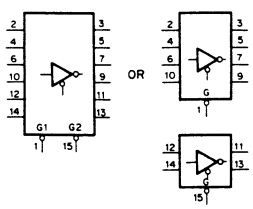

SN74HC161AN (TI) (V_{CC} = + 2 to + 6V)

C-MOS SYNCHRONOUS PRESETTABLE 4-BIT BINARY COUNTER
– TOP VIEW –

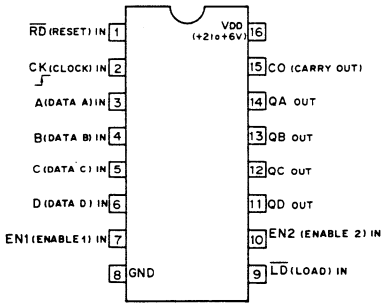

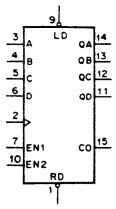

MODE SELECTION

CONTROL INPUTS				MODE
RD	LD	EN1	EN2	
0	X	X	X	RESET (ASYNCHRONOUS)
1	0	X	X	PRESET (SYNCHRONOUS)
1	1	0	X	NO COUNT
1	1	X	0	NO COUNT
1	1	1	1	COUNT

0 ; LOW LEVEL
1 ; HIGH LEVEL
X ; DON'T CARE

CARRY OUTPUT "CO"

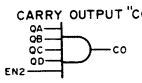

CO IS HIGH WHEN EN2 INPUT IS HIGH AND COUNT IS "15".

COUNT SEQUENCE

COUNT	OUTPUTS			
	QD	QC	QB	QA
0	0	0	0	0
1	0	0	0	1
2	0	0	1	0
3	0	0	1	1
4	0	1	0	0
5	0	1	0	1
6	0	1	1	0
7	0	1	1	1
8	1	0	0	0
9	1	0	0	1
10	1	0	1	0
11	1	0	1	1
12	1	1	0	0
13	1	1	0	1
14	1	1	1	0
15	1	1	1	1

SN74HC163AN (TI)
SN74HC163ANS (TI) FLAT PACKAGE

C-MOS PRESETTABLE SYNCHRONOUS 4-BIT BINARY COUNTER
– TOP VIEW –

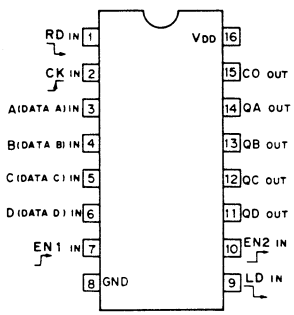

NOTE :

TYPE	VDD
74ACT	+ 5V
TC74AC163	+ 2 to + 5.5V
OTHER TYPES	+ 2 to + 6V

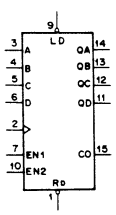

MODE SELECTION

CONTROL INPUTS				MODE
RD	LD	EN1	EN2	
0	X	X	X	RESET (SYNCHRONOUS)
1	0	X	X	PRESET (SYNCHRONOUS)
1	1	0	X	NO COUNT
1	1	X	0	NO COUNT
1	1	1	1	COUNT

CARRY OUTPUT "CO"

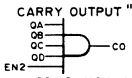

CO IS HIGH WHEN EN2 INPUT IS HIGH AND COUNT IS "15".

COUNT SEQUENCE

COUNT	OUTPUTS			
	QD	QC	QB	QA
0	0	0	0	0
1	0	0	0	1
2	0	0	1	0
3	0	0	1	1
4	0	1	0	0
5	0	1	0	1
6	0	1	1	0
7	0	1	1	1
8	1	0	0	0
9	1	0	0	1
10	1	0	1	0
11	1	0	1	1
12	1	1	0	0
13	1	1	0	1
14	1	1	1	0
15	1	1	1	1

SN74HC164AN (TI)
SN74HC164N (TI)

C-MOS 8-BIT SERIAL-IN/PARALLEL-OUT SHIFT REGISTER
- TOP VIEW -

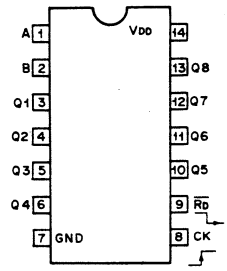

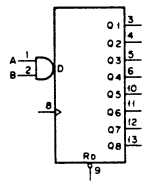

INPUTS				OUTPUTS				
RD	CK	A	B	Q1	Q2	----	Q8	
0	X	X	X	0	0	0	0	
1	0	X	X	Q10	Q20	----	Q80	
1	↑	1	1	1	Q1n	----	Q7n	0;LOW LEVEL
1	↑	0	X	0	Q1n	----	Q7n	1;HIGH LEVEL
1	↑	X	0	0	Q1n	----	Q7n	X;DON'T CARE

NOTE :

TYPE	VDD
TC74AC164F	+2 to +5.5V
OTHER TYPES	+2 to +6V

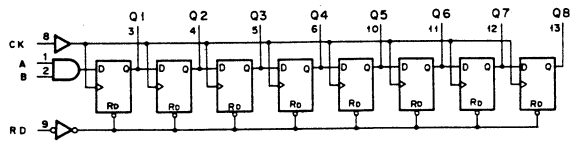

SN74HC166AN (TI)
SN74HC166N (TI)

C-MOS 8-BIT SHIFT REGISTER
- TOP VIEW -

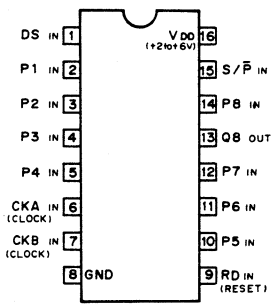

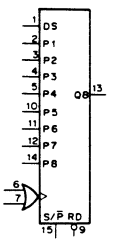

DS : DATA SERIAL INPUT
PI - P8 : DATA PARALLEL INPUT
CK : CLOCK

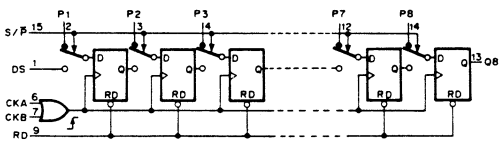

CKA	CKB	CK
0	0	0
X	1	1
1	X	1
1	↑	1
↑	1	1
0	↑	↑
↑	0	↑

0 ;LOW LEVEL
1 ;HIGH LEVEL
X ;DON'T CARE

INPUT						OUTPUT
RD	S/P̄	CK	DS	P1-P8		Q8
0	X	X	X	X		0
1	X	0	X	X		Q8o
1	0	↑	X	1-8		8
1	1	↑	1	X		Q7n
1	1	↑	0	X		Q7n
1	X	↑	X	X		Q8o

SN74HC174AN (TI)

C-MOS D-TYPE FLIP-FLOP WITH RESET
- TOP VIEW -

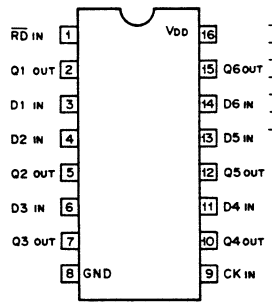

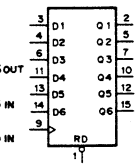

EACH FLIP - FLOP

INPUTS			OUT
RD	CK	D	Q
0	X	X	0
1	↑	0	0
1	↑	1	1
1	0	X	Qo

0;LOW LEVEL
1;HIGH LEVEL
X;DON'T CARE

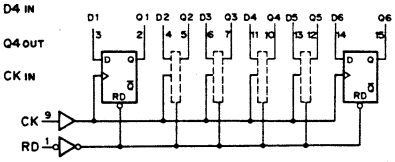

NOTE :

TYPE	VDD
74AC	+3.3 to +5V
74ACT	+5V
74HC	+2 to +6V
TC74AC174	+2 to +5.5V

SN74HC175AN (TI)
SN74HC175ANS (TI) FLAT PACKAGE

C-MOS D-TYPE FLIP-FLOP WITH RESET
- TOP VIEW -

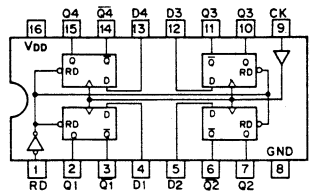

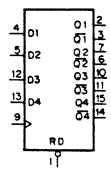

RD	CK	D	Q	Q̄
0	X	X	0	1
1	↑	1	1	0
1	↑	0	0	1
1	0	X	Qo	Q̄o

0 ; LOW LEVEL
1 ; HIGH LEVEL
X ; DON'T CARE
Qo ; NO CHANGE
Q̄o ; NO CHANGE

NOTE :

TYPE	VDD
74AC	+2 to +5.5V
74ACT	+5V
74HC	+2 to +6V

SN74HC20AN (TI)
SN74HC20ANS (TI) FLAT PACKAGE

C-MOS 4-INPUT POSITIVE-NAND GATE
- TOP VIEW -

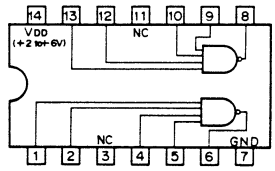

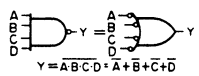

A	B	C	D	Y
0	0	0	0	1
0	0	0	1	1
0	0	1	0	1
0	0	1	1	1
0	1	0	0	1
:	:	:	:	:
1	1	0	1	1
1	1	1	0	1
1	1	1	1	0

0;LOW LEVEL
1;HIGH LEVEL

NOTE :

TYPE	VDD
TC74AC20	+2V to +5.5V
OTHER TYPES	+2V to +6V

SN74HC21AN (TI) FLAT PACKAGE
SN74HC21N (TI)

C-MOS DUAL 4-INPUT POSITIVE AND GATE
– TOP VIEW –

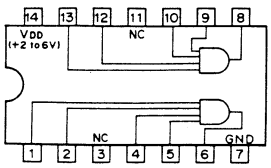

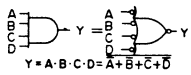

A	B	C	D	Y
0	0	0	0	0
0	0	0	1	0
0	0	1	0	0
0	0	1	1	0
0	1	0	0	0
⋮	⋮	⋮	⋮	⋮
1	1	0	1	0
1	1	1	0	0
1	1	1	1	1

0 ; LOW LEVEL
1 ; HIGH LEVEL

SN74HC240AN (TI)
SN74HC240ANS (TI) FLAT PACKAGE

C-MOS 3-STATE INVERTER/LINE DRIVER
– TOP VIEW –

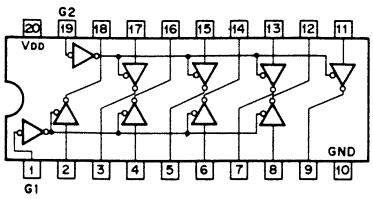

G	A	Y
0	0	1
0	1	0
1	X	HI-Z

0 ; LOW LEVEL
1 ; HIGH LEVEL
X ; DON'T CARE
HI-Z ; HIGH IMPEDANCE

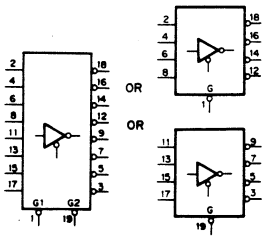

NOTE :

TYPE	VDD
74AC/74HC	+2 to +6V
74ACT/74HCT	+5V
TC74AC240F TC74AC240P	+2 to +5.5V

SN74HC253AN (TI)
SN74HC253N (TI)

C-MOS 4-LINE-TO-1-LINE DATA SELECTOR/MULTIPLEXER
– TOP VIEW –

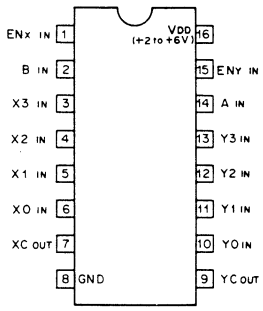

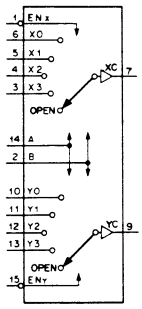

CONTROL IN			ON CHANNEL
EN	B	A	
0	0	0	0
0	0	1	1
0	1	0	2
0	1	1	3
1	X	X	OPEN

0 ; LOW LEVEL
1 ; HIGH LEVEL
X ; DON'T CARE

SN74HC257AN (TI)
SN74HC257ANS (TI) FLAT PACKAGE
SN74HC257N (TI)
SN74HC257NS (TI) FLAT PACKAGE

C-MOS 2-LINE-TO-1-LINE DATA SELECTOR/MULTIPLEXER
– TOP VIEW –

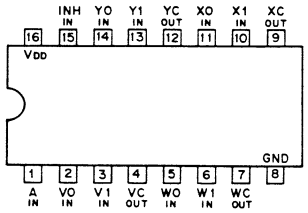

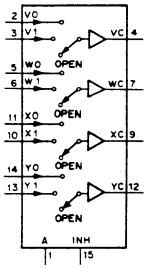

CONT. IN		ON CHANNEL
INH	A	
0	0	0
0	1	1
1	X	OPEN

0 ; LOW LEVEL
1 ; HIGH LEVEL
X ; DON'T CARE

NOTE :

TYPE	VDD
74AC/74HC	+2 to +6V
74ACT	+5V
TC74AC257F	+2 to +5.5V

SN74HC273ANS (TI) FLAT PACKAGE

C-MOS D-TYPE FLIP-FLOP WITH RESET
– TOP VIEW –

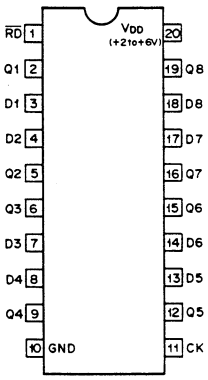

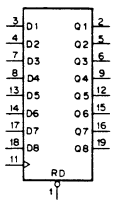

EACH FLIP-FLOP

INPUT			OUT
RD	CK	D	Q
0	X	X	0
1	↑	0	0
1	↑	1	1
1	0	X	Q0

0 ; LOW LEVEL
1 ; HIGH LEVEL
X ; DON'T CARE

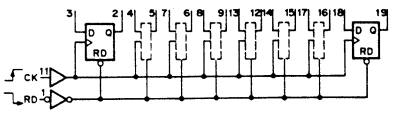

SN74HC27AN (TI)
SN74HC27N (TI)

C-MOS 3-LINE POSITIVE-NOR GATE
– TOP VIEW –

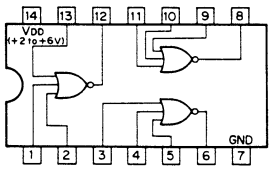

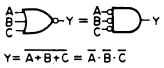

Y = $\overline{A+B+C}$ = $\overline{A}\cdot\overline{B}\cdot\overline{C}$

A	B	C	Y
0	0	0	1
0	0	1	0
0	1	0	0
0	1	1	0
1	0	0	0
1	0	1	0
1	1	0	0
1	1	1	0

0 ; LOW LEVEL
1 ; HIGH LEVEL

SN74HC280NS (TI) FLAT PACKAGE

C-MOS 9-BIT ODD/EVEN PARITY GENERATOR/CHECKER
– TOP VIEW –

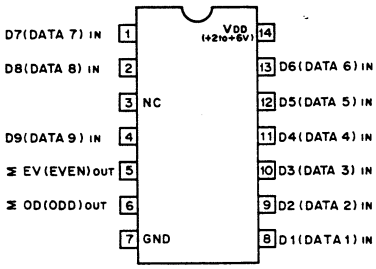

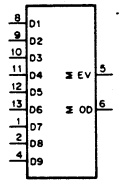

SUM OF H'S AT D1 THRU D9	OUTPUTS	
	Σ EV	Σ OD
EVEN (0,2,4,6,8)	1	0
ODD (1,3,5,7,9)	0	1

0; LOW LEVEL
1; HIGH LEVEL

SN74HC30AN (TI)
SN74HC30N (TI)

C-MOS 8-INPUT POSITIVE-NAND GATE
– TOP VIEW –

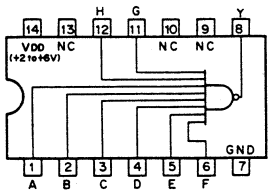

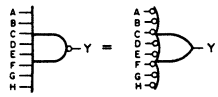

$Y = \overline{A \cdot B \cdot C \cdot D \cdot E \cdot F \cdot G \cdot H}$
$= \overline{A} + \overline{B} + \overline{C} + \text{----} + \overline{H}$

SN74HC32AN (TI)
SN74HC32ANS (TI) FLAT PACKAGE

C-MOS 2-INPUT OR GATE
– TOP VIEW –

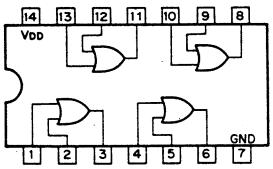

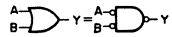

$Y = A + B = \overline{\overline{A} \cdot \overline{B}}$

A	B	Y
0	0	0
0	1	1
1	0	1
1	1	1

0:LOW LEVEL
1:HIGH LEVEL

NOTE :

TYPE	VDD
TC74AC32	+2 to +5.5V
OTHER TYPES	+2 to +6V

SN74HC352NS (TI) FLAT PACKAGE

C-MOS 4-LINE-TO-1-LINE DATA SELECTOR/MULTIPLEXER
– TOP VIEW –

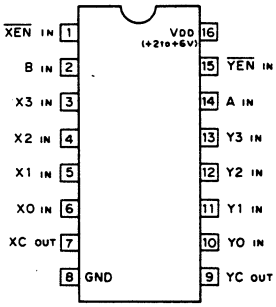

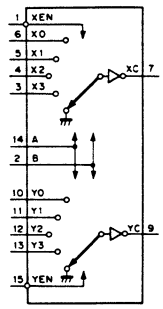

ENABLE EN	SELECT IN A	B	ON CHANNEL
1	X	X	VDD
0	0	0	0
0	1	0	1
0	0	1	2
0	1	1	3

0; LOW LEVEL
1; HIGH LEVEL
X; DON'T CARE

SN74HC374AN (TI)
SN74HCT374AN (TI)

C-MOS 3-STATE OCTAL D-TYPE FLIP-FLOP
– TOP VIEW –

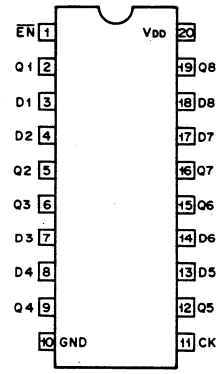

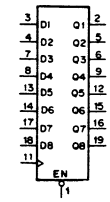

INPUTS			OUT
EN	D	CK	Q
0	1	↑	1
0	0	↑	0
0	X	0	Qo
1	X	X	HI-Z

0; LOW LEVEL
1; HIGH LEVEL
X; DON'T CARE
HI-Z; HIGH IMPEDANCE

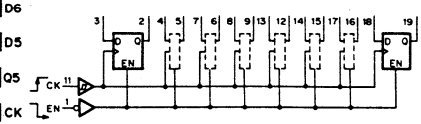

NOTE :

TYPE	VDD
74AC/74HC	+2 to +6V
74ACT/74HCT	+5V

SN74HC377AN (TI)
SN74HC377ANS (TI)

C-MOS OCTAL D-TYPE FLIP-FLOP WITH ENABLE
– TOP VIEW –

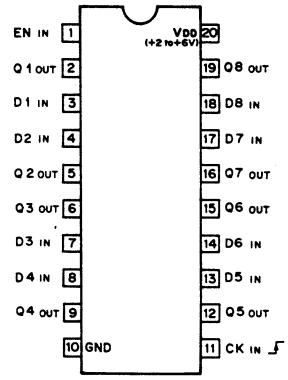

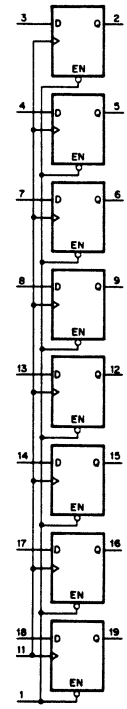

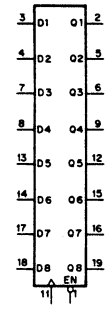

EACH FLIP-FLOP

INPUTS			OUT
EN	CK	D	Q
1	X	X	Qo
0	↑	1	1
0	↑	0	0
X	0	X	Qo

0; LOW LEVEL
1; HIGH LEVEL
X; DON'T CARE

SN74HC393AN (TI)
SN74HC393ANS (TI) FLAT PACKAGE

C-MOS DUAL 4-BIT BINARY COUNTER
– TOP VIEW –

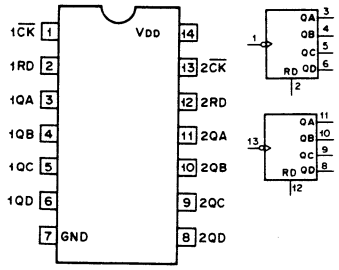

COUNT SEQUENCE

COUNT	QD	QC	QB	QA
0	0	0	0	0
1	0	0	0	1
2	0	0	1	0
3	0	0	1	1
4	0	1	0	0
5	0	1	0	1
6	0	1	1	0
7	0	1	1	1
8	1	0	0	0
9	1	0	0	1
10	1	0	1	0
11	1	0	1	1
12	1	1	0	0
13	1	1	0	1
14	1	1	1	0
15	1	1	1	1

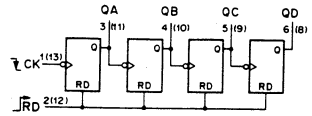

RESET/COUNT FUNCTION

RD	QD	QC	QB	QA
1	0	0	0	0
0	COUNT			

0; LOW LEVEL
1; HIGH LEVEL

NOTE :

TYPE	VDD
74AC	+2 to 5.5V
74HC	+2 to 6V

SN74HC4040AN (TI)
SN74HC4040N (TI)

C-MOS 12-STAGE RIPPLE CARRY BINARY COUNTER/DRIVER
– TOP VIEW –

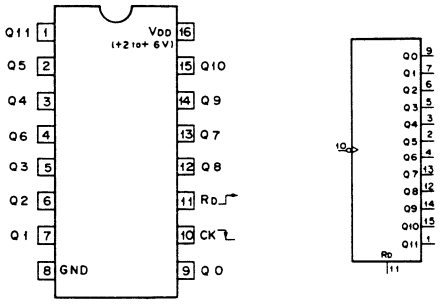

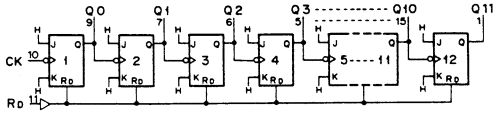

COUNT	Q11	Q10	Q9	Q8	Q7	Q6	Q5	Q4	Q3	Q2	Q1	Q0
0	0	0	0	0	0	0	0	0	0	0	0	0
1	0	0	0	0	0	0	0	0	0	0	0	1
2	0	0	0	0	0	0	0	0	0	0	1	0
3	0	0	0	0	0	0	0	0	0	0	1	1
⋮	⋮	⋮	⋮	⋮	⋮	⋮	⋮	⋮	⋮	⋮	⋮	⋮
4095	1	1	1	1	1	1	1	1	1	1	1	1

RD	Q11 ····· Q0
1	ALL LOW
0	COUNT

0; LOW LEVEL
1; HIGH LEVEL

SN74HC4024N (TI)

C-MOS 7-BIT BINARY COUNTERS
– TOP VIEW –

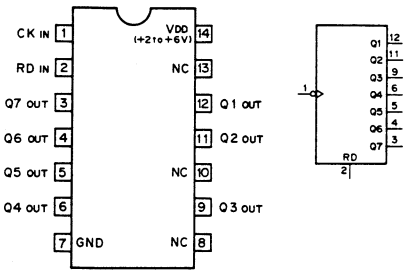

COUNT	INPUTS CK	INPUTS RD	OUTPUTS Q7	Q6	Q5	Q4	Q3	Q2	Q1
0	X	1	0	0	0	0	0	0	0
1	↓	0	0	0	0	0	0	0	1
2	↓	0	0	0	0	0	0	1	0
3	↓	0	0	0	0	0	0	1	1
⋮	⋮	⋮	⋮	⋮	⋮	⋮	⋮	⋮	⋮
125	↓	0	1	1	1	1	1	0	1
126	↓	0	1	1	1	1	1	1	0
127	↓	0	1	1	1	1	1	1	1
–	0	0	NO CHANGE						
–	1	0							

0; LOW LEVEL
1; HIGH LEVEL
X; DON'T CARE

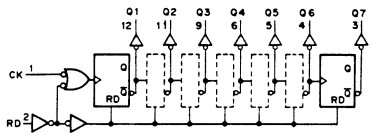

SN74HC4075AN (TI)
SN74HC4075ANS (TI) FLAT PACKAGE
SN74HC4075N (TI)
SN74HC4075NS (TI) FLAT PACKAGE

C-MOS 3-INPUT OR GATE
– TOP VIEW –

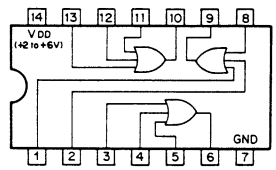

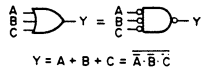

$Y = A + B + C = \overline{\overline{A} \cdot \overline{B} \cdot \overline{C}}$

C	B	A	Y
0	0	0	0
X	X	1	1
X	1	X	1
1	X	X	1

0; LOW LEVEL
1; HIGH LEVEL
X; DON'T CARE

SN74HC540AN (TI)

C-MOS 3-STATE INVERTING BUFFER/LINE DRIVER/LINE RECEIVER
– TOP VIEW –

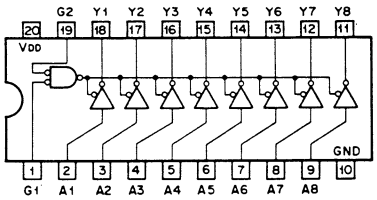

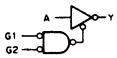

G1	G2	A	Y
0	0	0	1
0	0	1	0
1	X	X	HI-Z
X	1	X	HI-Z

0; LOW LEVEL
1; HIGH LEVEL
X; DON'T CARE
HI-Z; HIGH IMPEDANCE

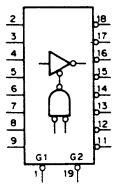

NOTE :

TYPE	VDD
TC74AC540F TC74AC540P	+5V
OTHER TYPES	+2 to +6V

SN74HC574AN (TI)
SN74HC574ANS (TI) FLAT PACKAGE
TC74AC574F (TOSHIBA) FLAT PACKAGE

C-MOS 3-STATE D-TYPE EDGE-TRIGGERED FLIP-FLOP
– TOP VIEW –

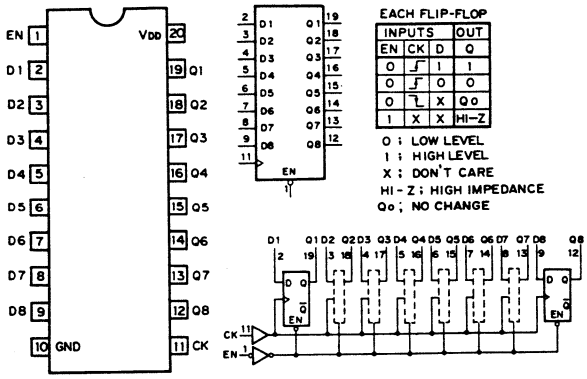

EACH FLIP-FLOP

INPUTS			OUT
EN	CK	D	Q
0	↑	1	1
0	↑	0	0
0	↓	X	Q0
1	X	X	HI-Z

0 ; LOW LEVEL
1 ; HIGH LEVEL
X ; DON'T CARE
HI-Z ; HIGH IMPEDANCE
Q0 ; NO CHANGE

NOTE :

TYPE	VDD
74AC/74HC	+2 to +6V
74ACT/74HCT	+5V
TC74AC574F	+2 to +5.5V

SN74LS08N (TI)

TTL 2-INPUT POSITIVE-AND GATE
– TOP VIEW –

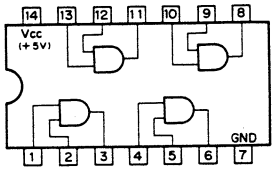

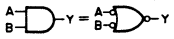

$Y = A \cdot B = \overline{\overline{A} + \overline{B}}$

A	B	Y
0	0	0
0	1	0
1	0	0
1	1	1

0; LOW LEVEL
1; HIGH LEVEL

SN74LS240N (TI)

TTL 3-STATE SCHMITT TRIGGER INVERTER/LINE DRIVER
– TOP VIEW –

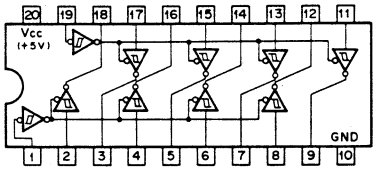

G	A	Y
0	0	1
0	1	0
1	X	HI-Z

0;LOW LEVEL
1;HIGH LEVEL
X;DON'T CARE
HI-Z;HIGH IMPEDANCE

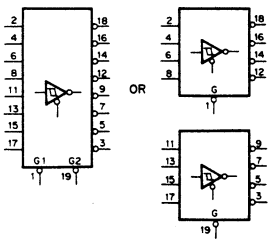

SN74LS244N (TI)

TTL 3-STATE SCHMITT TRIGGER BUFFER/DRIVER
– TOP VIEW –

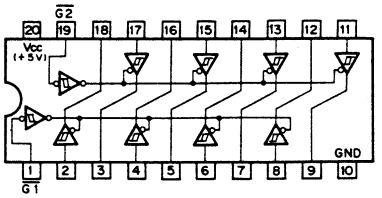

G	A	Y
0	0	0
0	1	1
1	X	HI-Z

0; LOW LEVEL
1; HIGH LEVEL
X; DON'T CARE
HI-Z; HIGH IMPEDANCE

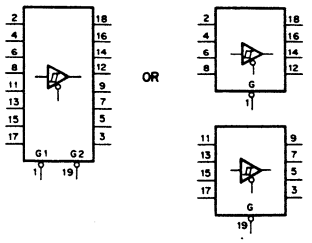

SN74LS399N (TI)

TTL QUAD 2-INPUT MULTIPLEXERS WITH STORAGE
– TOP VIEW –

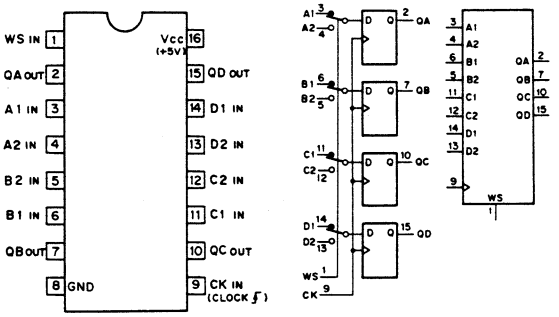

WS; WORD SELECT

INPUTS		OUTPUTS			
WS	CK	QA	QB	QC	QD
0	↑	A1	B1	C1	D1
1	↑	A2	B2	C2	D2
X	0	QA0	QB0	QC0	QD0

1; HIGH LEVEL
0; LOW LEVEL
X; DON T CARE

SN74S1057SC (SONY)

BUS TERMINATION ARRAY
– SIDE VIEW –

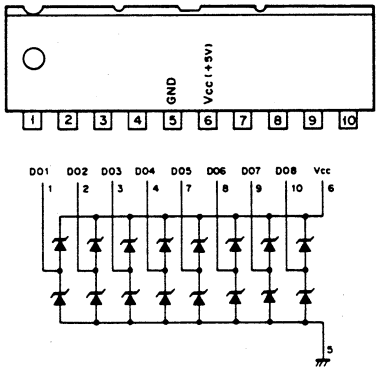

SN751177N (TI)

DUAL DIFFERENTIAL LINE DRIVER/RECIVER
– TOP VIEW –

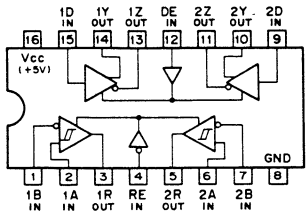

DRIVER BLOCK

INPUT D	ENABLE DE	OUTPUTS Y	Z
1	1	1	0
0	1	0	L
X	0	HI-Z	HI-Z

RECEIVER BLOCK

DIFFERENCIAL INPUT A-B	ENABLE RE	OUTPUT R
$V_{ID} \geqq 0.2V$	0	1
$-0.2V < V_{ID} < 0.2V$	0	X
$V_{ID} \leqq -0.2V$	0	0
0 OR 1	1	HI-Z

0 ; LOW LEVEL
1 ; HIGH LEVEL
X ; DON'T CARE
HI-Z; HIGH IMPEDANCE

SN75188N (TI)

2-INPUT (1-INPUT) POSITIVE-NAND LINE DRIVER
– TOP VIEW –

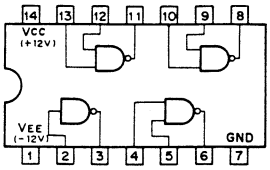

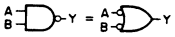

A	B	Y
0	0	1
0	1	1
1	0	1
1	1	0

0; LOW LEVEL
1; HIGH LEVEL

SN75189AN (TI)

QUADRUPLE LINE RECEIVER
– TOP VIEW –

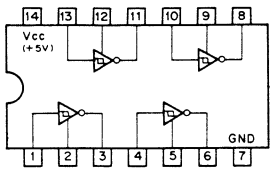

INPUT THRESHOLD SHIFTING

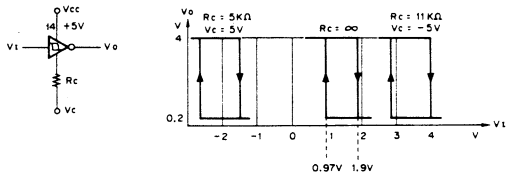

INPUT NOISE FILTERING

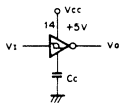

SN75ALS194N (TI)

QUAD RS-422 LINE DRIVER WITH 3-STATE OUTPUTS
– TOP VIEW –

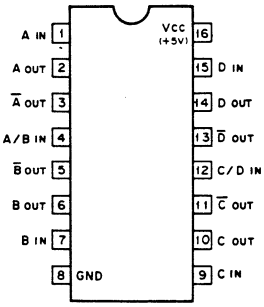

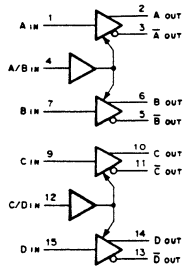

A, B, C, D IN	A/B, C/D IN	A, B, C, D OUT	Ā, B̄, C̄, D̄ OUT
0	0	0	1
1	0	1	0
X	1	HI-Z	HI-Z

0 : LOW LEVEL
1 : HIGH LEVEL
X : DON'T CARE
HI-Z : HIGH IMPEDANCE

TA7257P (TOSHIBA)

FULL-BRIDGE DRIVER FOR DC MOTOR (H-SWITCH)
– PRINTED SIDE VIEW –

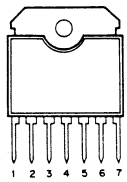

IN1	IN2	OUT1	OUT2	MODE
1	1	0	0	BRAKE
0	1	0	1	FORWARD/REVERSE
1	0	1	0	REVERSE/FORWARD
0	0	HI-Z		STOP

0; LOW LEVEL
1; HIGH LEVEL
HI-Z; HIGH INPEDANCE

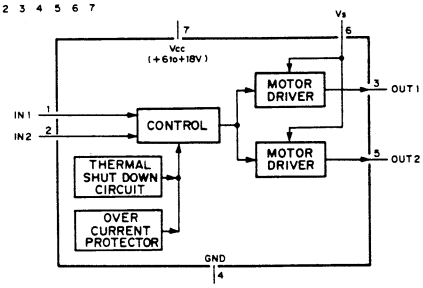

TC40107BP (TOSHIBA)

C-MOS NAND BUFFER/DRIVER WITH OPEN-DRAIN
– TOP VIEW –

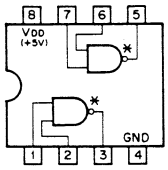

A	B	Y
0	0	HI-Z
0	1	HI-Z
1	0	HI-Z
1	1	0

0 ; LOW LEVEL
1 ; HIGH LEVEL
HI-Z ; HIGH IMPEDANCE
*; OPEN-DRAIN

TC4093BP (TOSHIBA)

C-MOS 2-INPUT NAND SCHMITT TRIGGER
– TOP VIEW –

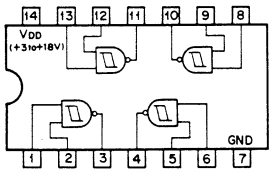

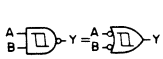

A	B	Y
0	0	1
0	1	1
1	0	1
1	1	0

0; LOW LEVEL
1; HIGH LEVEL

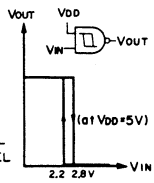

TC40H004F (TOSHIBA) FLAT PACKAGE

C-MOS INVERTER

– TOP VIEW –

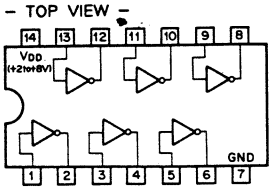

$Y = \overline{A}$

A	Y
0	1
1	0

0 ; LOW LEVEL
1 ; HIGH LEVEL

TC40H074F (TOSHIBA) FLAT PACKAGE

C-MOS HIGH SPEED D-TYPE FLIP-FLOP WITH DIRECT SET/RESET

– TOP VIEW –

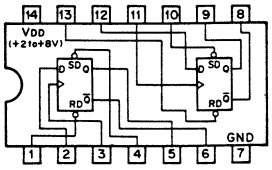

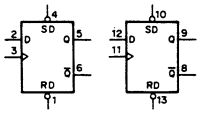

D-MODE

tn	tn + 1	
D	Q	$\overline{Q}$
0	0	1
1	1	0

R-S MODE

INPUT		OUTPUT	
RD	SD	Q	$\overline{Q}$
0	0	1	1
0	1	0	1
1	0	1	0
1	1	D-MODE	

0 ; LOW LEVEL
1 ; HIGH LEVEL

TC40H368F (TOSHIBA) FLAT PACKAGE

C-MOS INVERTING 3-STATE BUFFER

– TOP VIEW –

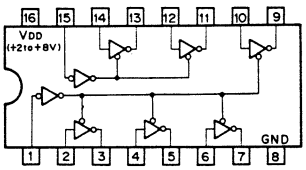

G	A	Y
0	0	1
0	1	0
1	X	HI-Z

0 ; LOW LEVEL
1 ; HIGH LEVEL
X ; DON'T CARE
HI-Z ; HIGH IMPEDANCE

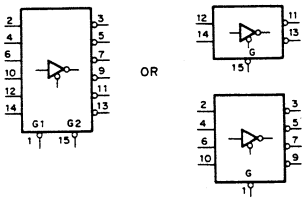

TC5020BP (TOSHIBA)

C-MOS LOW-TO-HIGH VOLTAGE TRANSLATION INVERTER

– TOP VIEW –

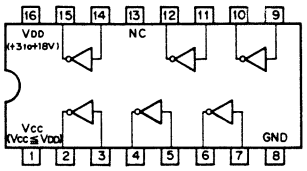

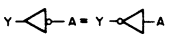

$Y = \overline{A}$

A	Y
0	1
1	0

0 ; LOW LEVEL
1 ; HIGH LEVEL

TC524258AZ-10 (TOSHIBA)

C-MOS 1M (262,144x4)-BIT MULTIPORT DYNAMIC RAM

– SIDE VIEW –

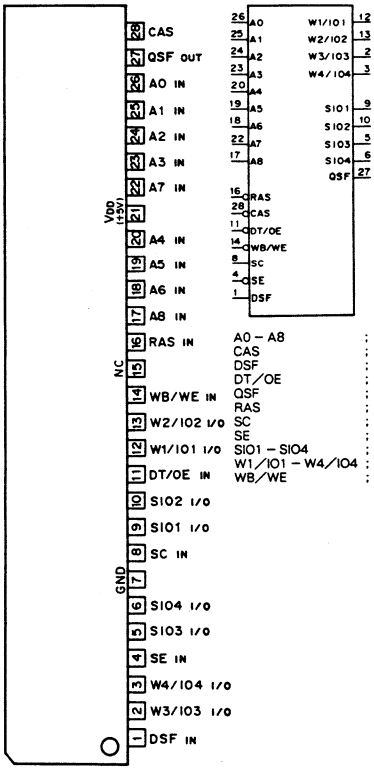

A0 – A8	; ADDRESS INPUTS
CAS	; COLUMN ADDRESS STROBE
DSF	; SPECIAL FUNCTION CONTROL
DT/OE	; DATA TRANSFER/OUTPUT ENABLE
QSF	; SPECIAL FLAG OUTPUT
RAS	; ROW ADDRESS STROBE
SC	; SERIAL CLOCK
SE	; SERIAL ENABLE
SIO1 – SIO4	; SERIAL DATA INPUTS/OUTPUTS
W1/101 – W4/104	; WRITE MASK/DATA INPUTS/OUTPUTS
WB/WE	; WRITE PER BIT

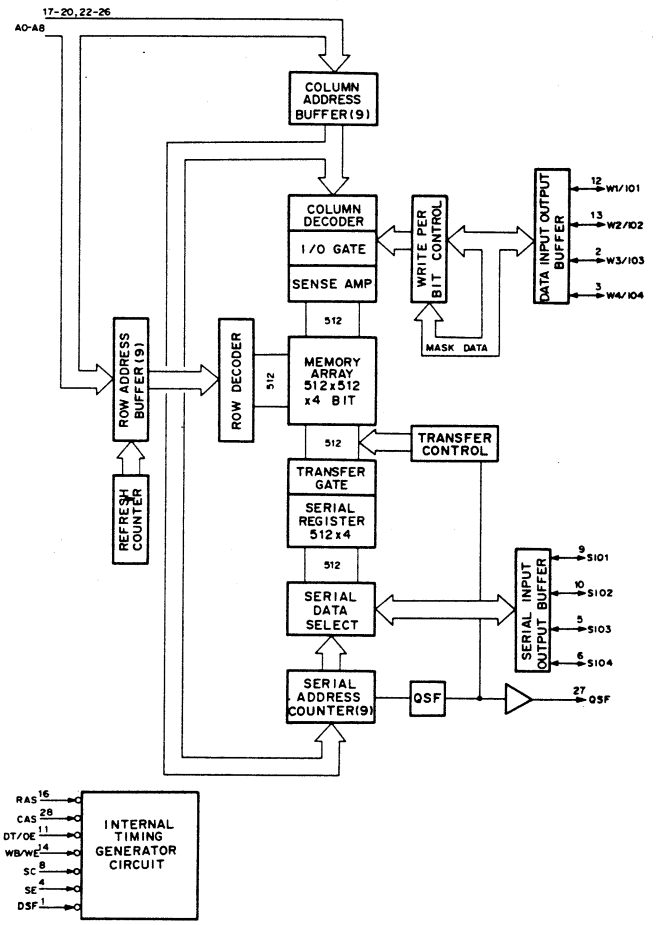

TC74HC123AP (TOSHIBA)

C-MOS DUAL RETRIGGERABLE MONOSTABLE MULTIVIBRATOR
– TOP VIEW –

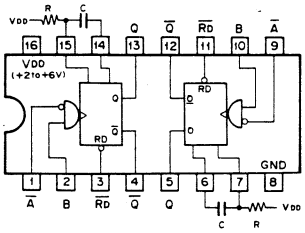

INPUT			OUTPUT	
RD	A	B	Q	Q̄
0	X	X	0	1
1	1	X	0	1
1	X	0	0	1
1	0	↓	⎍	⎍
1	↑	1	⎍	⎍
↓	0	1	⎍	⎍

0 ; LOW LEVEL
1 ; HIGH LEVEL
X ; DON'T CARE

OUTPUT PULSE WIDTH = 0.46CR

TC74HC221AF (TOSHIBA) FLAT PACKAGE

C-MOS MONOSTABLE MULTIVIBRATOR WITH SCHMITT TRIGGER INPUT
– TOP VIEW –

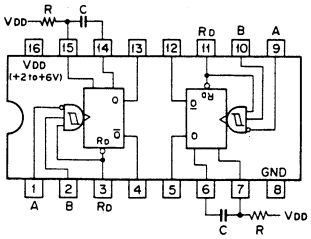

INPUTS			OUTPUTS	
RD	A	B	Q	Q̄
0	X	X	0	1
X	1	X	0	1
X	X	0	0	1
1	0	↑	⎍	⎍
1	↓	1	⎍	⎍
↑	0	1	⎍	⎍

0;LOW LEVEL
1;HIGH LEVEL
X;DON'T CARE

OUTPUT PULSE WIDTH = 0.7CR

TC74HC283AP (TOSHIBA)

C-MOS 4-BIT BINARY FULL ADDER
– TOP VIEW –

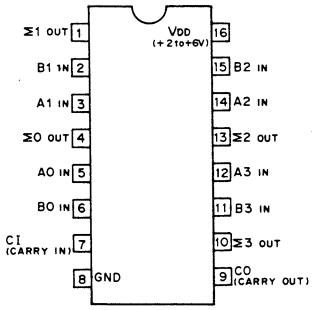

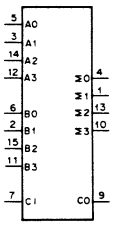

2^4	2^3	2^2	2^1	2^0	DIGIT
				CI	CARRY IN
	A3	A2	A1	A0	DATA A IN
+	B3	B2	B1	B0	DATA B IN
CO	Σ3	Σ2	Σ1	Σ0	CARRY&SUM OUT

EX.				1	CI
	1	0	1	1	A
+	1	0	1	0	B
1	0	1	1	0	OUTPUTS
CO	Σ3	Σ2	Σ1	Σ0	

TC74HC40105AP (TOSHIBA)

C-MOS 16-WORDx4-BIT FIFO REGISTER
– TOP VIEW –

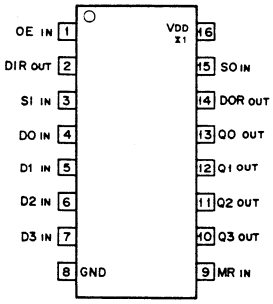

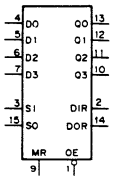

OE ; OUTPUT ENABLE INPUT
DO–D3 ; DATA INPUTS
QO–Q3 ; DATA OUTPUTS
SI ; SHIFT IN INPUT
SO ; SHIFT OUT INPUT
MR ; MASTER RESET INPUT
DIR ; DATA IN READY OUTPUT
DOR ; DATA OUT READY OUTPUT

*1

TYPE	VDD
CD40105BE	+3 to +18V
CD74HC40105E TC74HC40105AP	+2 to +6V

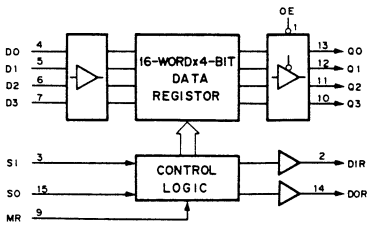

MC74HC4538AN (MOTOROLA)
TC74HC4538AP (TOSHIBA)

C - MOS DUAL RETRIGGERABLE / NON - RETRIGGERABLE MONOSTABLE MULTIVIBRATOR
– TOP VIEW –

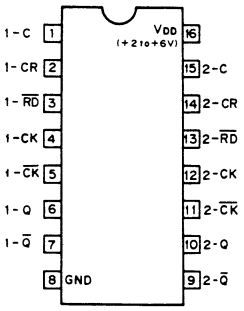

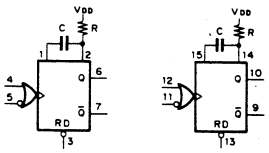

OUTPUT PULSE WIDTH = k·C·R

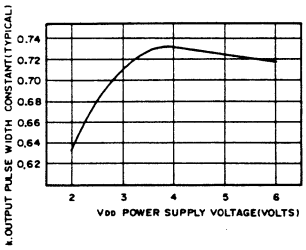

RETRIGGERABLE M.M.V

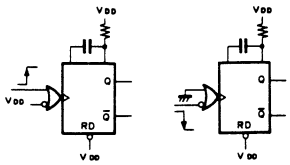

NON-RETRIGGERABLE M.M.V

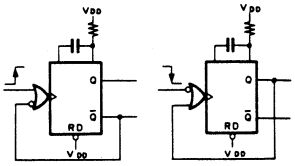

TC74HC595AP (TOSHIBA)

C-MOS 8-BIT SERIAL-INPUT/SERIAL- OR PARALLEL-OUTPUT SHIFT REGISTER WITH LATCHED 3-STATE OUTPUT
- TOP VIEW -

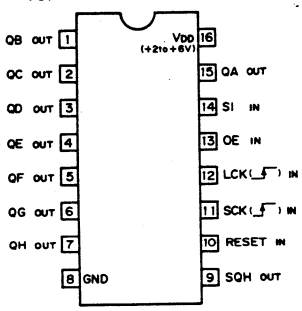

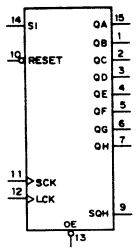

OE ; OUTPUT ENABLE INPUT
LCK ; LATCH CLOCK INPUT
SCK ; SHIFT CLOCK INPUT
RESET ; SHIFT-REGISTER RESET INPUT
SI ; SERIAL IN
QA-QH ; PARALLEL OUTPUTS
SQH ; SERIAL OUT

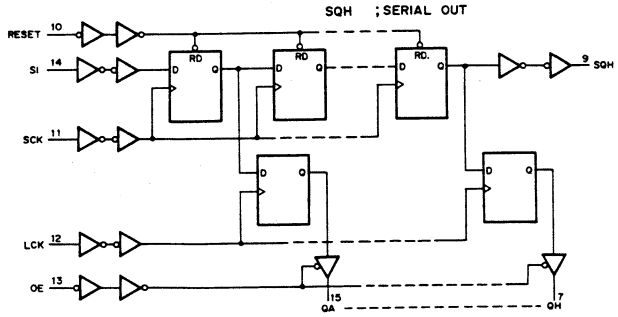

TL084CNS (TI) FLAT PACKAGE
UPC4084C (NEC)

OPERATIONAL AMPLIFIER
(J FET-INPUT)
- TOP VIEW -

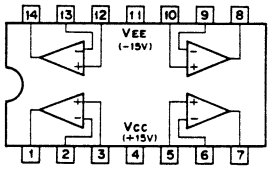

TL431CLP (TI)

ADJUSTABLE PRECISION SHUNT REGULATOR

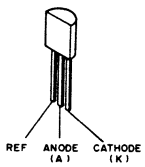

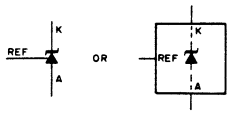

TL7700CP (TI)

VARIABLE SUPPLY VOLTAGE SUPERVISOR
- TOP VIEW -

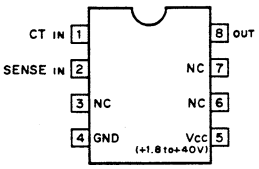

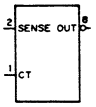

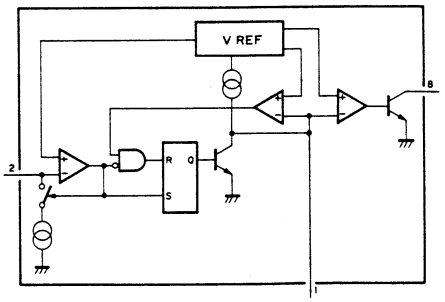

TL7705ACP (TI)

POWER VOLTAGE SUPERVISOR
- TOP VIEW -

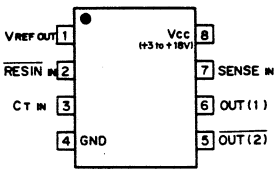

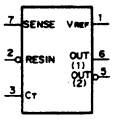

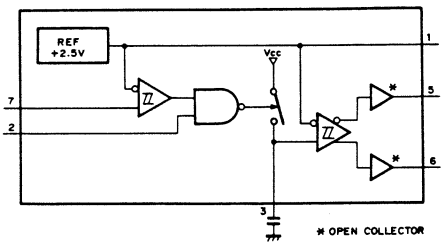

TLC372CPS (TI) FLAT PACKAGE

C-MOS COMPARATOR
- TOP VIEW -

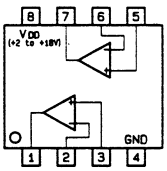

TMS4C1050-30SD (TI)

C-MOS 1M (262,144x4)-BIT DYNAMIC RAM (FIELD MEMORY)
- SIDE VIEW -

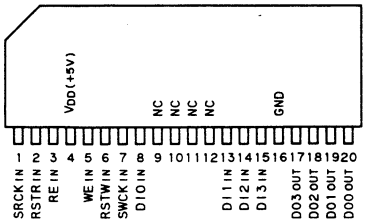

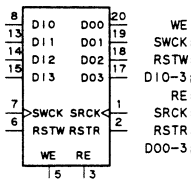

WE;WRITE ENABLE INPUT
SWCK;WRITE CLOCK INPUT
RSTW;WRITE ADDRESS RESET INPUT
DI0-3;DATA INPUTS
RE;READ ENABLE INPUT
SRCK;READ CLOCK INPUT
RSTR;READ ADDRESS RESET INPUT
DO0-3;DATA OUTPUTS

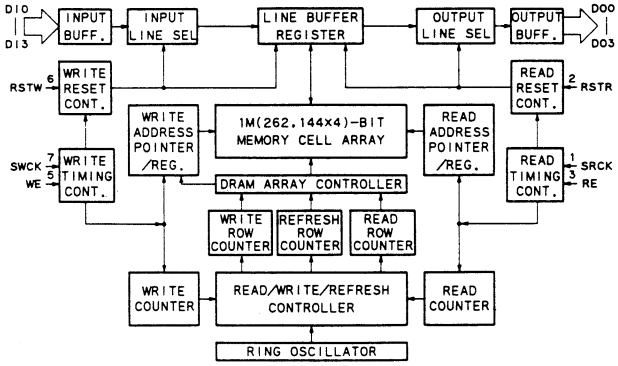

TMS4C1060-40SD (TI)

C-MOS 262,144WORDx4-BIT FIELD MEMORY
- TOP VIEW -

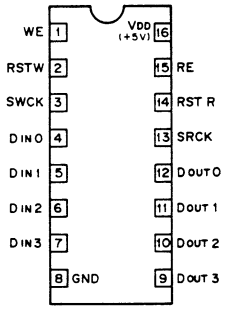

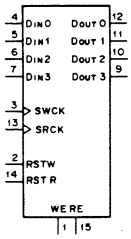

DIN0 – DIN3	; DATA INPUTS
DOUT0 – DOUT3	; DATA OUTPUTS
RE	; READ ENABLE
RSTR	; RESET READ
RSTW	; RESET WRITE
SRCK	; SERIAL READ CLOCK
SWCK	; SERIAL WRITE CLOCK
WE	; WRITE ENABLE

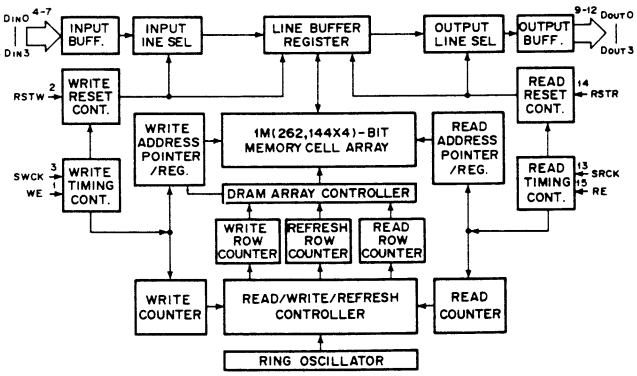

UPC1663G (NEC) FLAT PACKAGE

WIDEBAND VIDEO AMPLIFIER
- TOP VIEW -

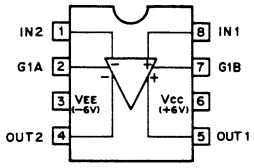

UPC319C (NEC)
UPC319G2 (NEC) FLAT PACKAGE

DUAL VOLTAGE COMPARATOR
- TOP VIEW -

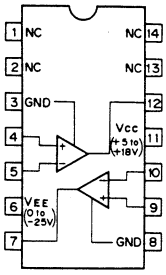

UPC324G2 (NEC) FLAT PACKAGE

QUAD. OP AMPLIFIER
- TOP VIEW -

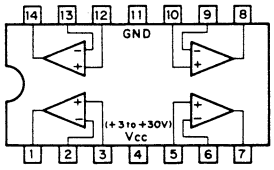

UPC339C (NEC)
UPC339G2 (NEC) FLAT PACKAGE

COMPARATOR
- TOP VIEW -

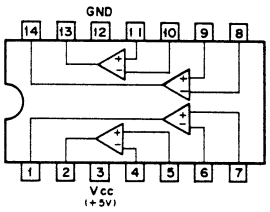

UPC358C (NEC)
UPC358G2 (NEC) FLAT PACKAGE

DUAL OPERATIONAL AMPLIFIERS
- TOP VIEW -

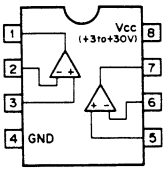

UPC393C (NEC)
UPC393G2 (NEC) FLAT PACKAGE

DUAL VOLTAGE COMPARATORS
– TOP VIEW –

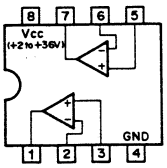

UPC4082G2 (NEC) FLAT PACKAGE

OPERATIONAL AMPLIFIER
(J FET-INPUT)
– TOP VIEW –

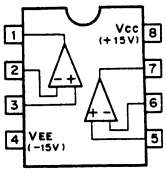

UPC648C (NEC)

12-BIT D/A CONVERTER WITH OPEN COLLECTOR OUTPUT
– TOP VIEW –

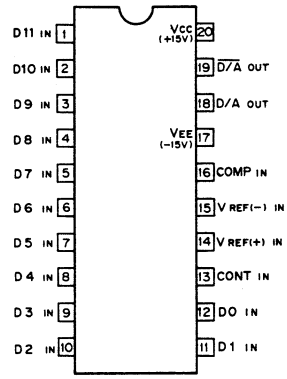

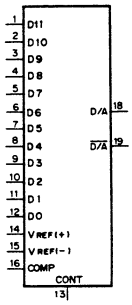

CONT ; THRESHOLD LEVEL CONTROL

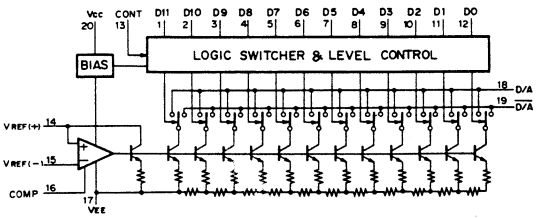

UPD42101C-3 (NEC)

C-MOS 7K (910x8)-BIT FIFO MEMORY
– TOP VIEW –

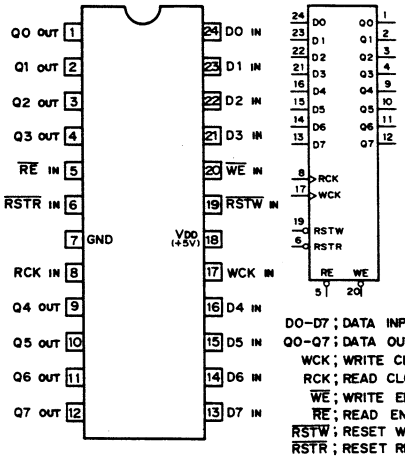

DO–D7 ; DATA INPUTS
QO–Q7 ; DATA OUTPUTS
WCK ; WRITE CLOCK INPUT
RCK ; READ CLOCK INPUT
$\overline{WE}$; WRITE ENABLE INPUT
$\overline{RE}$; READ ENABLE INPUT
$\overline{RSTW}$; RESET WRITE INPUT
$\overline{RSTR}$; RESET READ INPUT

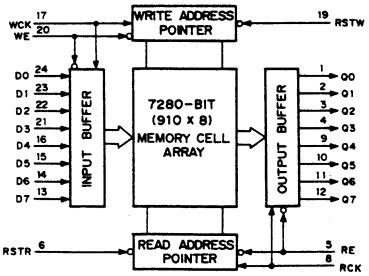

UPD42505C-50 (NEC) (ACCESS TIME = 40nS)

C-MOS 5048x8-BIT FIFO MEMORY
– TOP VIEW –

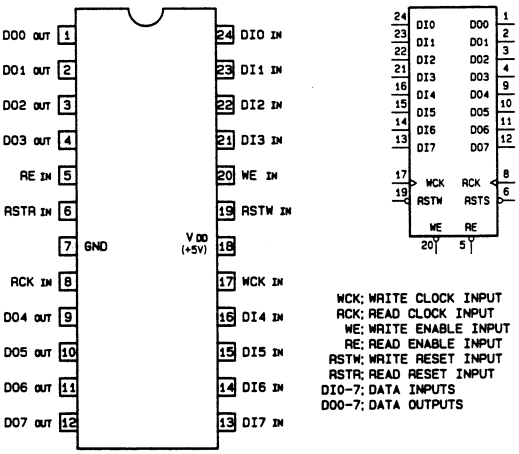

WCK; WRITE CLOCK INPUT
RCK; READ CLOCK INPUT
WE; WRITE ENABLE INPUT
RE; READ ENABLE INPUT
RSTW; WRITE RESET INPUT
RSTR; READ RESET INPUT
DI0–7; DATA INPUTS
DO0–7; DATA OUTPUTS

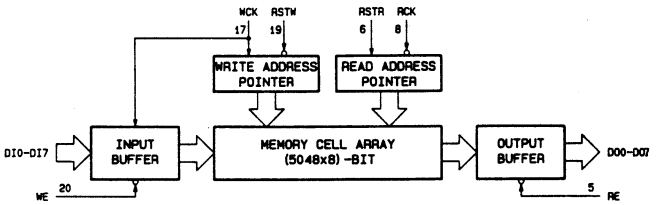

UPD5201G (NEC) FLAT PACKAGE

C-MOS QUAD SPST ANALOG SWITCH

– TOP VIEW –

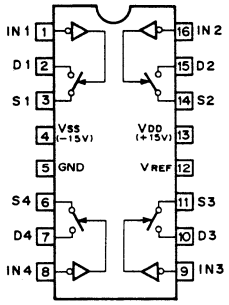

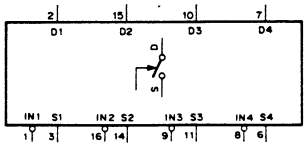

IN	SWITCH
0	ON
1	OFF

0 : LOW LEVEL
1 : HIGH LEVEL

D1–D4 : DRAIN
S1–S4 : SOURCE
SPST : SINGLE-POLE, SINGLE-THROW

UPD6451CX-501 (NEC)

C-MOS ON-SCREEN DISPLAY

– TOP VIEW –

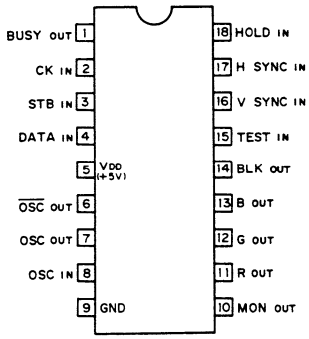

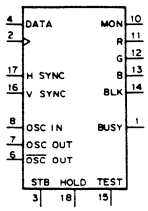

BUSY	: BUSY OUTPUT
CK	: CLOCK INPUT (FOR SERIAL DATA)
DATA	: SERIAL DATA INPUT
HOLD	: HOLD INPUT
H SYNC	: HORIZONTAL SYNC INPUT
MON	: CHARACTER SIGNAL MONITOR OUTPUT
OSC IN	: OSCILLATOR INPUT
OSC OUT	: OSCILLATOR OUTPUT
$\overline{\text{OSC}}$ OUT	: OSCILLATOR OUTPUT
STB	: STROBE INPUT
TEST	: TEST CLOCK INPUT
BLK	: BLANKING SIGNAL OUTPUT
V SYNC	: VERTICAL SYNC INPUT
R, G, B	: R, G, B CHARACTER DATA OUTPUT

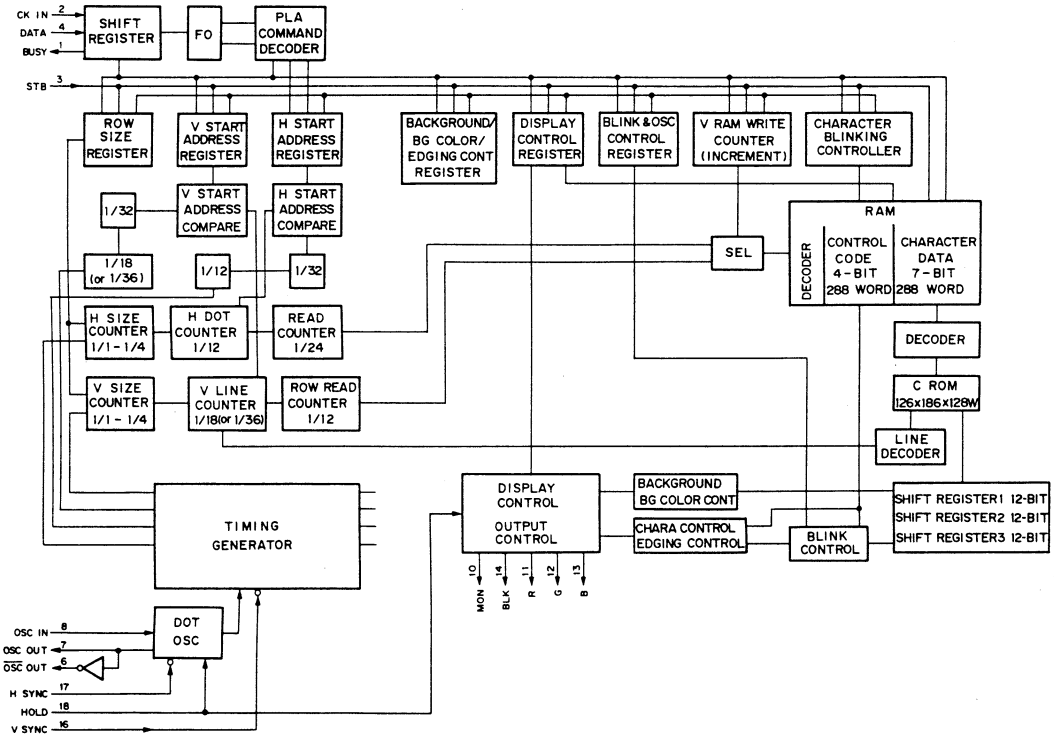

UPD70136R-12 (NEC)
UPD70136R-16 (NEC)

C-MOS 16-BIT MICROPROCESSOR
– BOTTOM VIEW –

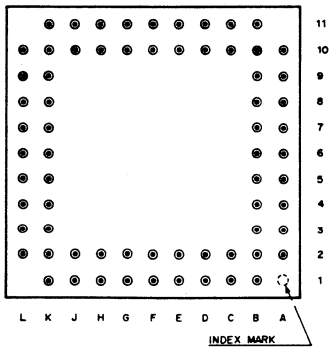

(V_{DD} = +5V)

PIN NO.	I/O	SYMBOL	PIN NO.	I/O	SYMBOL	PIN NO.	I/O	SYMBOL	PIN NO.	I/O	SYMBOL
A2	O	AEX	B9	I	CLK	F10	–	V_{DD}	K4	O	A12
A3	O	HLDAK	B10	I/O	D14	F11	–	GND	K5	O	A14
A4	I	READY	B11	I/O	D12	G1	O	A0	K6	–	GND
A5	–	IC	C1	O	UBE	G2	O	A1	K7	O	A16
A6	–	V_{DD}	C2	O	BUSST1	G10	I/O	D5	K8	O	A18
A7	I	CPBUSY	C10	I/O	D11	G11	I/O	D4	K9	O	A20
A8	I	INT	C11	I/O	D10	H1	O	A2	K10	O	A23
A9	I/O	D15	D1	O	BUSST0	H2	O	A3	K11	O	A22
A10	I/O	D13	D2	O	R/$\overline{W}$	H10	I/O	D3	L2	O	A7
B1	O	BUSLOCK	D10	I/O	D9	H11	I/O	D2	L3	O	A9
B2	O	BCYST	D11	I/O	D8	J1	O	A4	L4	O	A11
B3	I	$\overline{BS8}$/BS16	E1	O	M/$\overline{IO}$	J2	O	A5	L5	O	A13
B4	I	HLDRQ	E2	O	DSTB	J10	I/O	D1	L6	–	V_{DD}
B5	I	RESET	E10	I/O	D7	J11	I/O	D0	L7	O	A15
B6	–	GND	E11	I/O	D6	K1	O	A6	L8	O	A17
B7	–	IC	F1	–	GND	K2	O	A8	L9	O	A19
B8	I	NMI	F2	–	V_{DD}	K3	O	A10	L10	O	A21

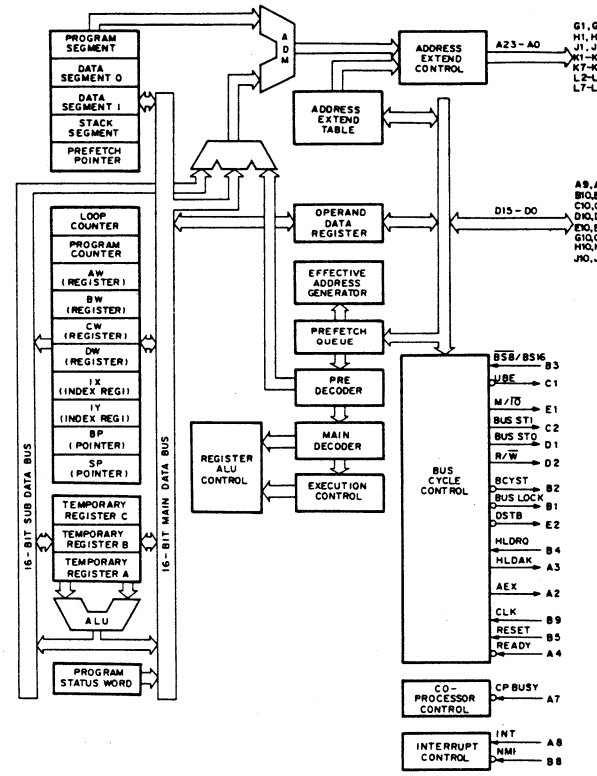

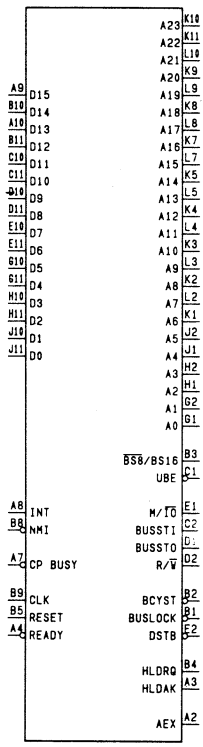

A23 – A0	: ADDRESS OUTPUTS
AEX	: ADDRESS EXTENSION OUTPUT
BCYST	: BUS CYCLE START STROBE OUTPUT
$\overline{BS8}$/BS16	: 8-BIT/16-BIT DATA BUS SELECT
BUSLOCK	: BUS LOCK OUTPUT
BUSST1, 0	: BUS STATUS OUTPUTS
CK	: CLOCK INPUT
CPBUSY	: CO-PROCESSOR BUSY INPUT
D15 – D0	: DATA I/O
DSTB	: DATA STROBE OUTPUT
HLDAK	: HOLD ACKNOWLEDGE OUTPUT
HLDRQ	: HOLD REQUEST INPUT
INT	: INTERRUPT INPUT
M/$\overline{IO}$	: MEMORY/IO ACCESS SELECT OUTPUT
NMI	: NON-MASKABLE INTERRUPT REQUEST INPUT
READY	: READY INPUT
RESET	: CPU RESET INPUT
R/$\overline{W}$	: READ/WRITE SELECT OUTPUT
UBE	: UPPER BYTE ACCESS ENABLE OUTPUT

UBE	A0	MODE
0	0	16-BIT ACCESS
0	1	MSD ACCESS
1	0	LSD ACCESS
1	1	SECOND CYCLE

PCM63P-K (BURR-BROWN)

20-BIT SERIAL D/A CONVERTER
– TOP VIEW –

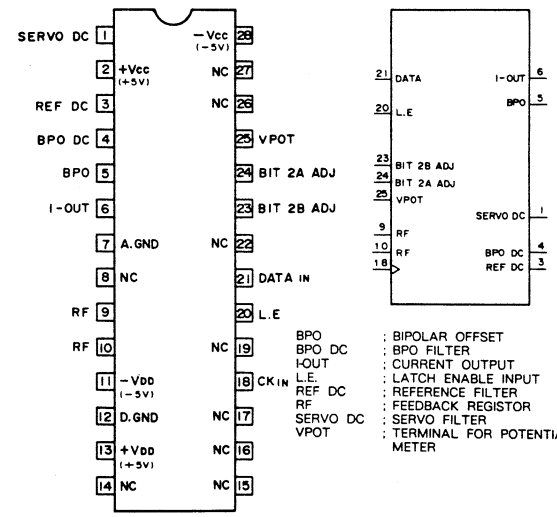

BPO	: BIPOLAR OFFSET
BPO DC	: BPO FILTER
I-OUT	: CURRENT OUTPUT
L.E.	: LATCH ENABLE INPUT
REF DC	: REFERENCE FILTER
RF	: FEEDBACK REGISTOR
SERVO DC	: SERVO FILTER
VPOT	: TERMINAL FOR POTENTIAL METER

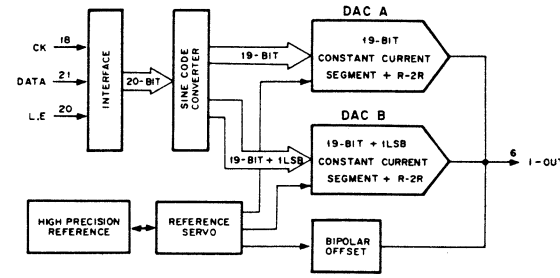

UPD70208R-10 (NEC)

C-MOS 16-BIT MICROPROCESSOR
– BOTTOM VIEW –

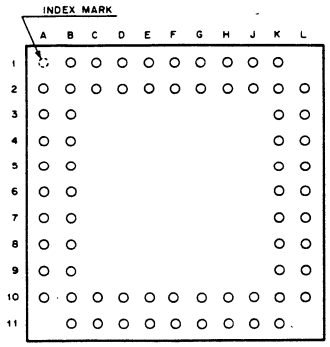

(VDD = + 5V)

PIN No.	I/O	SIGNAL	PIN No.	I/O	SIGNAL	PIN No.	I/O	SIGNAL
A2	I	INTP7	C11	I/O	AD2	J10	O	A12
A3	I	INTP5	D1	O	QS1	J11	O	A13
A4	I	INTP3	D2	O	QS0	K1	O	MWR
A5	I	INTP1	D10	I/O	AD3	K2	O	MRD
A6	O	$\overline{\text{DMAAK3}}$/T×D	D11	I/O	AD4	K3	O	BS1
A7	O	DMAAK2	E1	O	ASTB	K4	I	NM1
A8	O	DMAAK1	E2	O	HIGH	K5	I	RESET
A9	O	DMAAK0	E10	I/O	AD5	K6	O	RESOUT
A10	I/O	END/TC	E11	I/O	AD6	K7	I	HLDRQ
B1	I	TCLK	F1	–	GND	K8	O	A19/PS3
B2	O	TOUT2	F2	I	×2	K9	O	A17/PS1
B3	I	INTP6	F10	I/O	AD7	K10	O	A14
B4	I	INTP4	F11	–	GND	K11	O	A15
B5	I	INTP2	G1	I	×1	L2	O	IORD
B6	O	$\overline{\text{INTAK}}$/$\overline{\text{SRDY}}$/TOUT1	G2	O	CLKOUT	L3	O	BS0
B7	I	DMARQ3/R×D	G10	O	A8	L4	O	BS2
B8	I	DMARQ2	G11	O	A9	L5	I	READY
B9	I	DMARQ1	H1	O	BUFEN	L6	–	VDD
B10	I	DMARQ0	H2	O	BUF$\overline{\text{R}}$/W	L7	O	HLDAK
B11	I/O	AD0	H10	O	A10	L8	O	REFRQ
C1	I	TCTL2	H11	O	A11	L9	O	A18/PS2
C2	I	POLL	J1	O	BUSLOCK	L10	O	A16/PS0
C10	I/O	AD1	J2	O	IOWR			

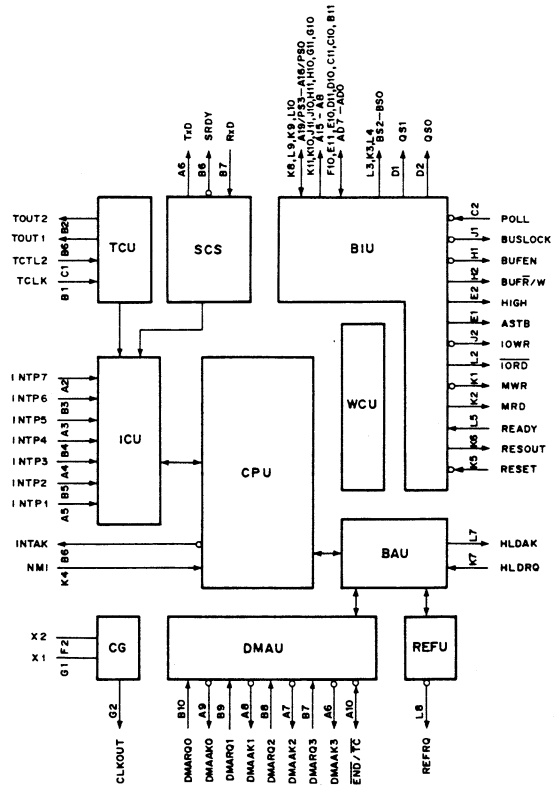

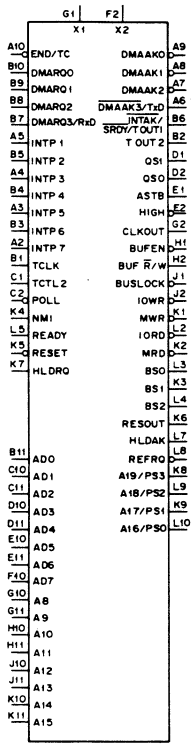

INPUT

DMARQ2 – DMARQ0	; DMA REQUEST
DMARQ3/R×D	; DMA REQUEST/RECEIVE DATA
HLDRQ	; HOLD REQUEST
INTP7 – INTP1	; INTERRUPT REQUEST
NMI	; NON-MASKABLE INTERRUPT
POLL	; POLL
READY	; READY
RESET	; RESET
TCLK	; TIMER CLOCK
TCTL2	; TIMER CONTROL
X2, X1	; CRYSTAL

OUTPUT

A15 – A8	; ADDRESS BUS
A19/PS3 – A16/PS0	; ADDRESS BUS/PROCESSOR STATUS
ASTB	; ADDRESS STROBE
BS2 – BS0	; BUS STATUS
BUFEN	; BUFFER ENABLE
BUFR/W	; BUFFER READ/WRITE
BUSLOCK	; BUS LOCK
CLKOUT	; CLOCK OUTPUT
DMAAK2 – DMAAK0	; DMA ACKNOWLEDGE
$\overline{\text{DMAAK3}}$/T×D	; DMA ACKNOWLEDGE/TRANSMIT DATA
HLDAK	; HOLD ACKNOWLEDGE
$\overline{\text{INTAK}}$/$\overline{\text{SRDY}}$/TOUT1	; INTERRUPT ACKNOWLEDGE/SERIAL READY/TIMER OUTPUT
IORD	; I/O READ
IOWR	; I/O WRITE
MRD	; MEMORY READ
MWR	; MEMORY WRITE
QS1, QS0	; QUEUE STATUS
REFRQ	; REFRESH REQUEST
RESOUT	; RESET OUTPUT
TOUT2	; TIMER OUTPUT

INPUT/OUTPUT

AD7 – AD0	; ADDRESS/DATA BUS
END/TC	; END/TERMINAL COUNT

UPD70320L-8 (NEC)

C-MOS 16-BIT MICROPROCESSOR

– TOP VIEW –

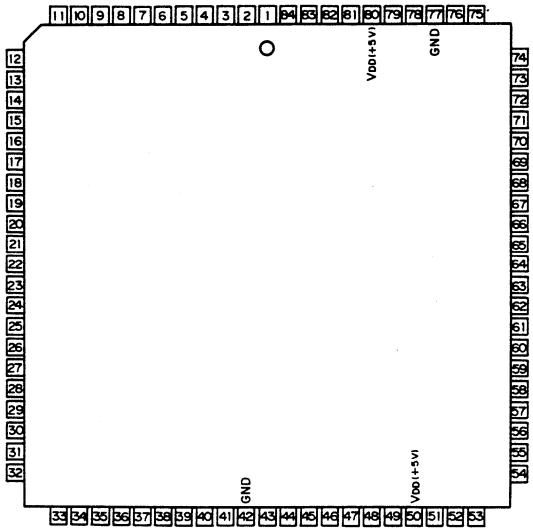

PIN No.	I/O	SYMBOL	PIN No.	I/O	SYMBOL	PIN No.	I/O	SYMBOL
1	O	IOSTB	29	O	A8	57	I/O	P26/HLDAK
2	O	MREQ	30	O	A9	58	I/O	P27/HLDRQ
3	I	EA	31	O	A10	59	I/O	P10/NMI
4	I/O	P00	32	O	A11	60	I/O	P11/INTP0
5	I/O	P01	33	O	A12	61	I/O	P12/INTP1
6	I/O	P02	34	O	A13	62	I/O	P13/INTP2/INTAK
7	I/O	P03	35	O	A14	63	I/O	P14/INT/POLL
8	I/O	P04	36	O	A15	64	I/O	P15/TOUT
9	—	IC	37	O	A16	65	I/O	P16/SCKO
10	I/O	P05	38	O	A17	66	I/O	P17/READY
11	I/O	P06	39	O	A18	67	I	PT0
12	I/O	P07/CLKOUT	40	O	A19	68	I	PT1
13	I/O	D0	41	I	RXD0	69	I	PT2
14	I/O	D1	42	—	GND	70	I	PT3
15	I/O	D2	43	I/O	CTS0	71	I	PT4
16	I/O	D3	44	O	TXD0	72	I	PT5
17	I/O	D4	45	I	RXD1	73	I	PT6
18	I/O	D5	46	I	CTS1	74	I	PT7
19	I/O	D6	47	O	TXD1	75	—	IC
20	I/O	D7	48	I/O	P20/DMARQ0	76	I	V_{TH}
21	O	A0	49	—	IC	77	—	GND
22	O	A1	50	I	V_{DD}(+5V)	78	—	X1
23	O	A2	51	I/O	P21/DMAAK0	79	—	X2
24	O	A3	52	I/O	P22/TC0	80	I	V_{DD}(+5V)
25	O	A4	53	—	IC	81	I	RESET
26	O	A5	54	I/O	P23/DMARQ1	82	O	REFRQ
27	O	A6	55	I/O	P24/DMAAK1	83	O	R/W
28	O	A7	56	I/O	P25/TC1	84	O	MSTB

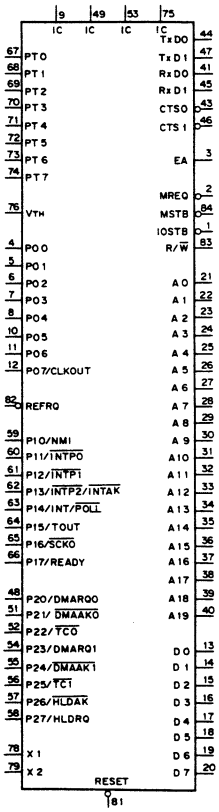

A0 – A19	: ADDRESS BUS OUTPUTS
CLKOUT	: SYSTEM CLOCK OUTPUT
CTS0, CTS1	: CLEAR TO SEND INPUT/OUTPUT
D0 – D7	: DATA BUS INPUTS/OUTPUTS
DMAAK0, DMAAK1	: DMA ACKNOWLEDGE CH0, CH1 OUTPUTS
DMARQ0, DMARQ1	: DMA REQUEST CH0, CH1 INPUTS
EA	: ROM-LESS MODE SET INPUT
HLDAK	: HOLD ACKNOWLEDGE OUTPUT
HLDRQ	: HOLD REQUEST INPUT
IC	: INTERNAL CONNECT
INTP0, INTP1	: INTERRUPT REQUEST INPUTS
INTP2	: INTERRUPT REQUEST INPUT
INTAK	: INTERRUPT ACKNOWLEDGE OUTPUT
IOSTB	: I/O READ/WRITE STROBE OUTPUT
MREQ	: MEMORY REQUEST OUTPUT
MSTB	: MEMORY READ/WRITE STROBE OUTPUT
NMI	: NON-MASKABLE INTERRUPT INPUT
P00 – P07	: PORT 0 INPUTS/OUTPUTS
P10 – P17	: PORT 1 INPUTS/OUTPUTS
P20 – P27	: PORT 2 INPUTS/OUTPUTS
PT0 – PT7	: PORT 0 INPUTS
INT/$\overline{POLL}$	: INTERRUPT REQUEST INPUT
READY	: READY INPUT
REFRQ	: REFRESH REQUEST OUTPUT
RESET	: RESET INPUT
R/$\overline{W}$	: READ AND WRITE CYCLE OUTPUT
RXD0, RXD1	: SERIAL DATA INPUTS
SCKO	: SERIAL CLOCK OUTPUT
TC0, TC1	: DMA (CH0/CH1) ENDING OUTPUTS
TOUT	: TIMER OUTPUT
TXD0, TXD1	: SERIAL DATA OUTPUTS
V_{TH}	: REF. V FOR COMPARATOR INPUT
X1, X2	: CRYSTAL 1, 2

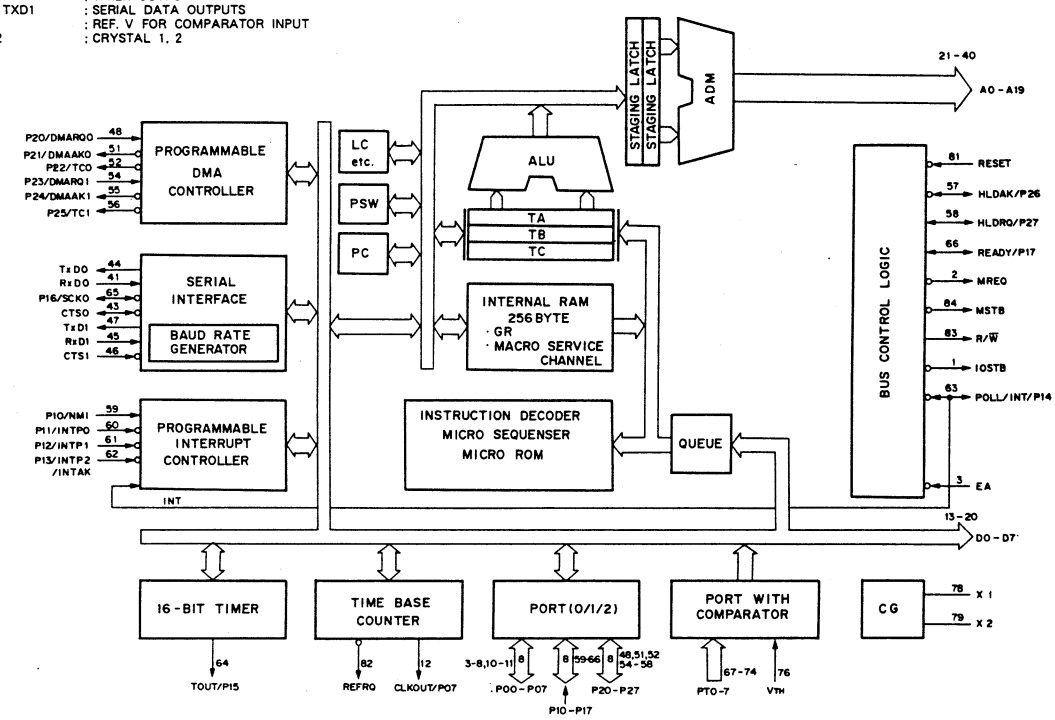

UPD71054GB-3B4 (NEC) FLAT PACKAGE

C-MOS PROGRAMMABLE TIMER COUNTER

– TOP VIEW –

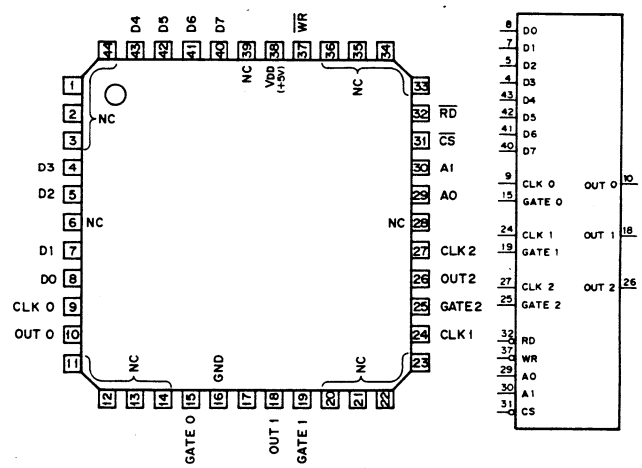

UPD71055GB-10-3B4 (NEC) FLAT PACKAGE

C-MOS PARALLEL INTERFACE UNIT

– TOP VIEW –

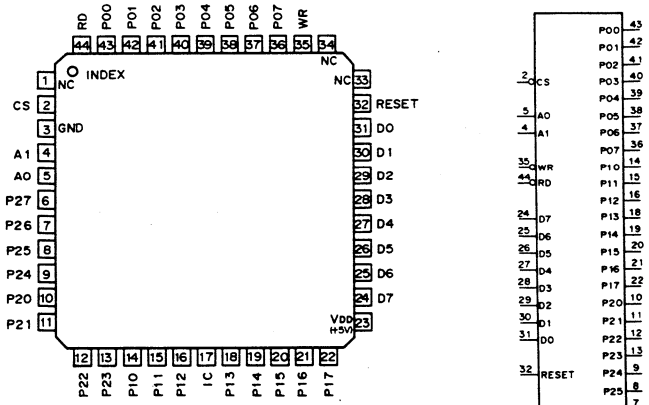

A1, A0 : ADDRESS
CS : CHIP SELECT
D7 – D0 : DATA BUS
P07 – P00 : PORT 0
P17 – P10 : PORT 1
P27 – P20 : PORT 2
RD : READ STROBE
WR : WRITE STROBE

IC : INTERNALLY CONNECTED

FUNCTION TABLE

INPUTS					FUNCTION
CS	RD	WR	A1	A0	
0	1	0	0	0	COUNTER NO. 1 WRITE
0	1	0	0	1	COUNTER NO. 2 WRITE
0	1	0	1	0	COUNTER NO. 3 WRITE
0	1	0	1	1	CONTROL WORD WRITE
0	0	1	0	0	COUNTER NO. 1 READ
0	0	1	0	1	COUNTER NO. 2 READ
0	0	1	1	0	COUNTER NO. 3 READ
0	0	1	1	1	NO-OPERATION (HI-Z)
1	X	X	X	X	DISABLE (HI-Z)
0	1	1	X	X	NO-OPERATION (HI-Z)

A1,A0 ; SELECTED READ/WRITE OPERATION
CLK n ; COUNTER CLOCK INPUT n
CS ; CHIP SELECT
D7-D0 ; 8-BIT DATA I/O
GATE n; COUNTER GATE INPUT n
IC ; INTERNALLY CONNECTED
OUT n ; COUNTER CLOCK OUTPUT n
RD ; READ COUNTER/STATUS
WR ; WRITE COMMAND/DATA

0 ; LOW LEVEL
1 ; HIGH LEVEL
X ; DON'T CARE
HI-Z ; HIGH IMPEDANCE

CS	RD	WR	A1	A0	OPERATION	CPU ACTION
0	0	1	0	0	PROT 0 → DATA·BUS	INPUT
0	0	1	0	1	PROT 1 → DATA·BUS	INPUT
0	0	1	1	0	PROT 2 → DATA·BUS	INPUT
0	0	1	1	1	DISABLE	
0	0	0	X	X		
0	1	0	0	0	DATA·BUS → PROT 0	OUTPUT
0	1	0	0	1	DATA·BUS → PROT 1	OUTPUT
0	1	0	1	0	DATA·BUS → PROT 2	OUTPUT
0	1	0	1	1	DATA·BUS → COMMAND REGISTER	OUTPUT
0	1	1	X	X	HIGH IMPEDANCE	
1	X	X	X	X		

0 ; LOW LEVEL
1 ; HIGH LEVEL
X ; DON'T CARE

CONTROL WORD FORMAT

D7	D6	D5	D4	D3	D2	D1	D0
SC1	SC0	RWM1	RWM0	CM2	CM1	CM0	BCD

BCD : BINARY CODED DECIMAL

BCD	COUNTER OPERATION
0	16-BIT BINARY COUNT
1	4-FIGURE BCD COUNT

CM2	CM1	CM0	COUNTER MODE
0	0	0	MODE 0
0	0	1	MODE1
X	1	0	MODE 2
X	1	1	MODE 3
1	0	0	MODE 4
1	0	1	MODE 5

RWM1	RWM0	READ/WRITE MODE
0	0	COUNTER LATCHING CMD.
0	1	LSB ONLY
1	0	MSB ONLY
1	1	LSB FIRST THEN MSB

SC1	SC0	OPERATION
0	0	SELECTED COUNTER No.0
0	1	SELECTED COUNTER No.1
1	0	SELECTED COUNTER No.2
1	1	MULTIPLE LATCH COMMAND

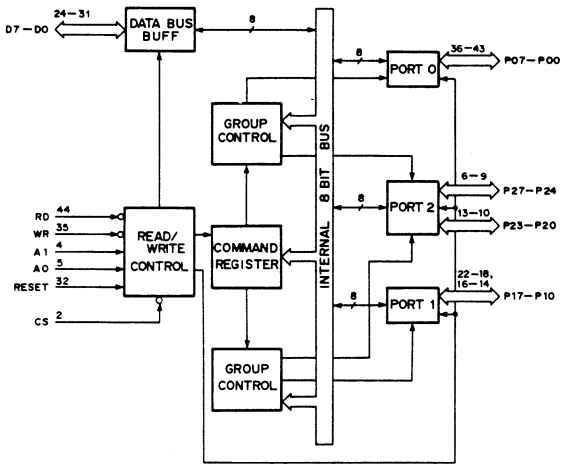

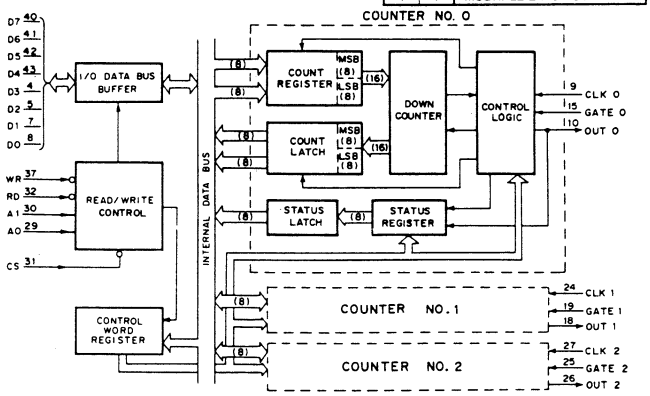

UPD71059C (NEC)

C-MOS INTERRUPT CONTROL UNIT
– TOP VIEW –

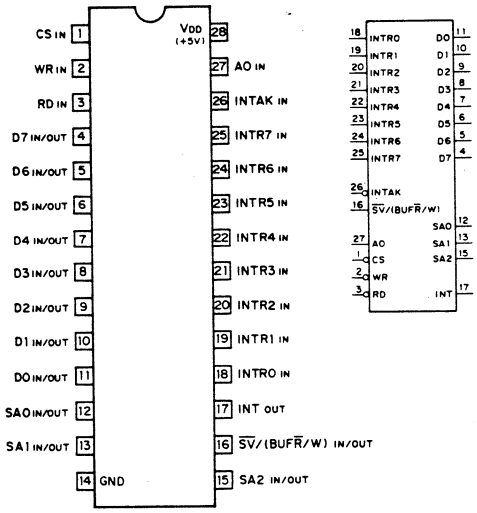

INTR0–INTR7 ; INTERRUPT REQUEST INPUTS
D0–D7 ; DATA BUS INPUTS/OUTPUTS
CS ; CHIP SELECT INPUT
RD ; READ STROBE INPUT
WR ; WRITE STROBE INPUT
A0 ; ADDRESS INPUT
INT ; INTERRUPT OUTPUT
INTAK ; INTERRUPT ACKNOWLEDGE INPUT
SV/(BUFR/W) ; CONTROLLED/BUFFER READ/WRITE INPUT/OUTPUT
SA0–SA2 ; CONTROLLED ADDRESS INPUTS/OUTPUTS

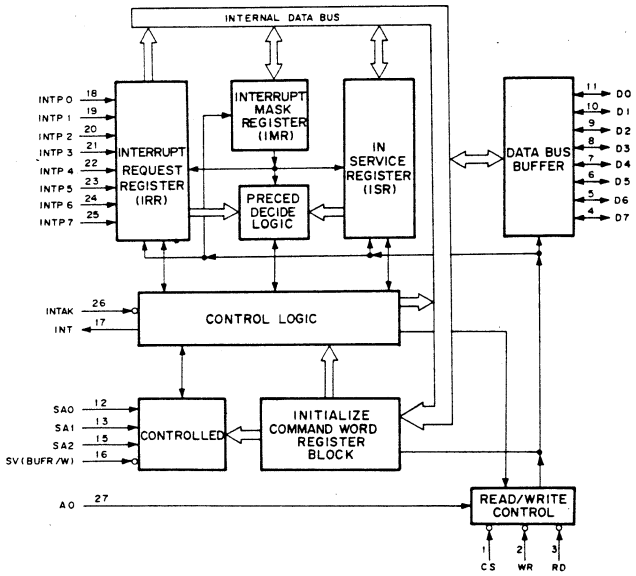

UPD71059GB-3B4 (NEC) FLAT PACKAGE

C-MOS INTERRUPT CONTROL UNIT
– TOP VIEW –

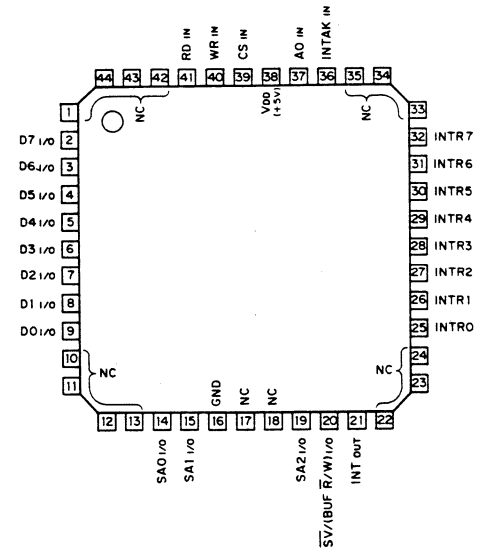

INTR0–INTR7 ; INTERRUPT REQUEST INPUTS
D0–D7 ; DATA BUS INPUTS/OUTPUTS
CS ; CHIP SELECT INPUT
RD ; READ STROBE INPUT
WR ; WRITE STROBE INPUT
A0 ; ADDRESS INPUT
INT ; INTERRUPT OUTPUT
INTAK ; INTERRUPT ACKNOWLEDGE INPUT
SV/(BUFR/W) ; CONTROLLED/BUFFER READ/WRITE INPUT/OUTPUT
SA0–SA2 ; CONTROLLED ADDRESS INPUTS/OUTPUTS

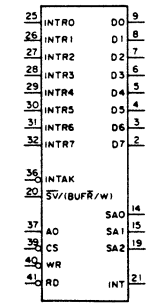

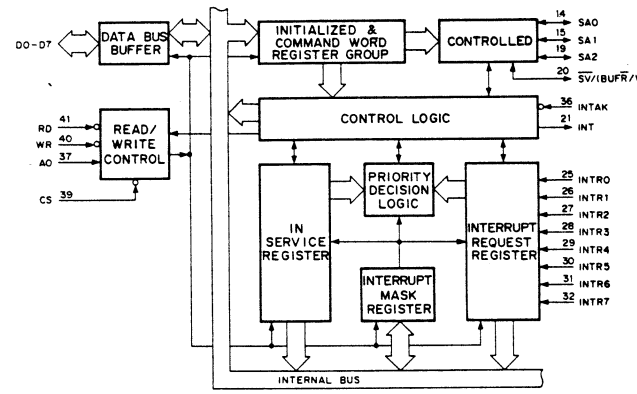

UPD71621C (NEC)

C-MOS CLOCK PULSE GENERATOR/DRIVER
- TOP VIEW -

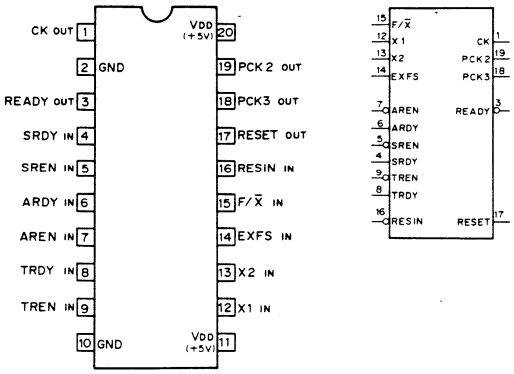

ARDY	: ASYNCHRONOUS READY INPUT
AREN	: ASYNCHRONOUS READY ENABLE INPUT
CK	: PROCESSOR CLOCK OUTPUT
EXFS	: EXTERNAL FREQUENCY SOURCE INPUT
F/X	: EXT FREQUENCY/CRYSTAL SELECT INPUT
PCK2	: PERIPHERAL CLOCK OUTPUT (F = 1/2CK)
PCK3	: PERIPHERAL CLOCK OUTPUT (F = 1/3CK)
READY	: READY OUTPUT
RESET	: RESET OUTPUT
RESIN	: RESET INPUT
SRDY	: SYNCHRONOUS READY INPUT
SREN	: SYNCHRONOUS READY ENABLE INPUT
TRDY	: THROUGH READY INPUT
TREN	: THROUGH READY ENABLE INPUT
X1, X2	: CRYSTAL INPUT

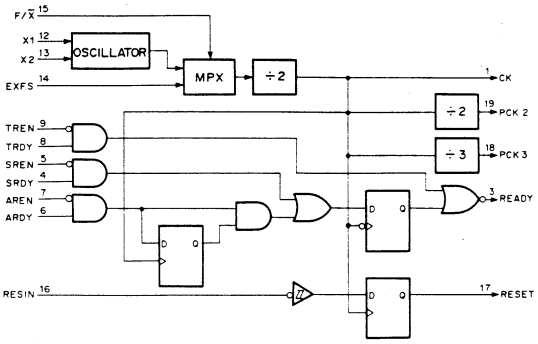

YM2413 (YAMAHA)

N-MOS OPLL
- TOP VIEW -

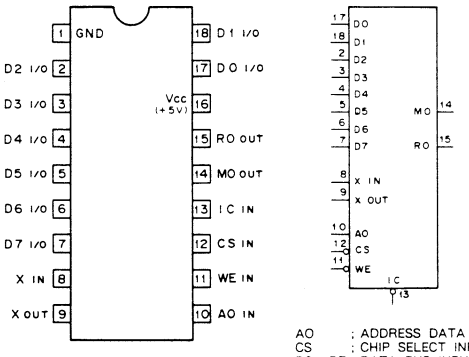

AO	: ADDRESS DATA INPUT
CS	: CHIP SELECT INPUT
D0 – D7	: DATA BUS INPUTS/OUTPUTS
IC	: SYSTEM RESET INPUT
MO	: MELODY OUTPUT
RO	: RHYTHM OUTPUT
WE	: WRITE ENABLE INPUT
X	: CRYSTAL OSCILLATOR

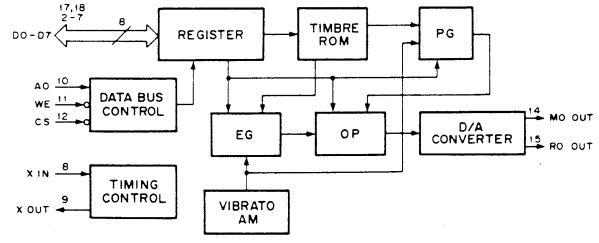

UPD431000AGW-70L (NEC)

C-MOS 1M (128Kx8)-BIT STATIC RAM
- TOP VIEW -

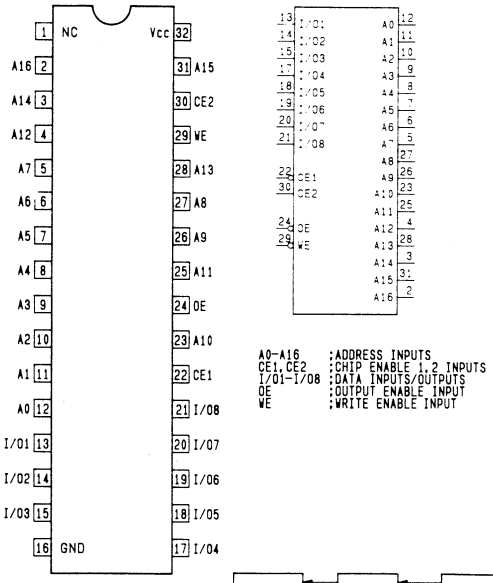

A0–A16	;ADDRESS INPUTS
CE1, CE2	;CHIP ENABLE 1, 2 INPUTS
I/O1–I/O8	;DATA INPUTS/OUTPUTS
OE	;OUTPUT ENABLE INPUT
WE	;WRITE ENABLE INPUT

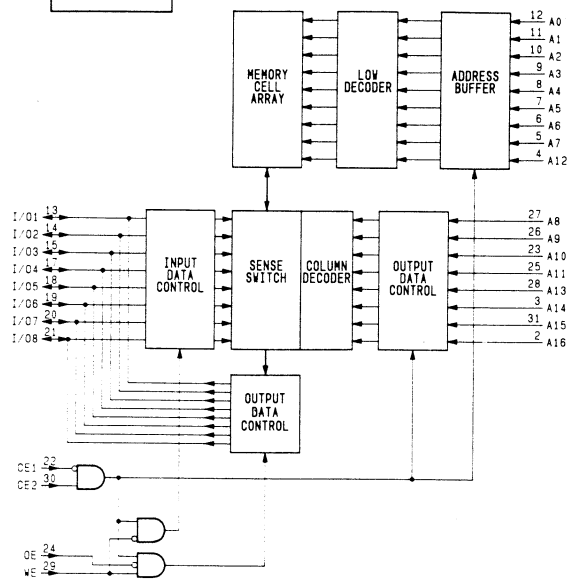

LM324NS (TI) FLAT PACKAGE

QUAD OPERATIOAL AMPLIFIERS
- TOP VIEW -

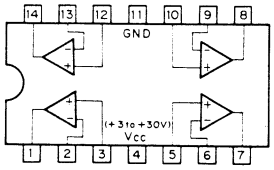

LM339N (TI)

QUAD COMPARATORS
- TOP VIEW -

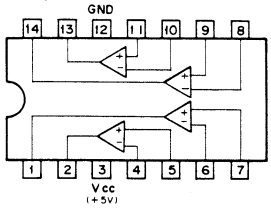

LM358PS (TI) FLAT PACKAGE

DUAL OPERATIONAL AMPLIFIERS
- TOP VIEW -

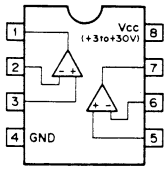

NJM082M (JRC) FLAT PACKAGE

OPERATIONAL AMPLIFIER
(J FET INPUT)
- TOP VIEW -

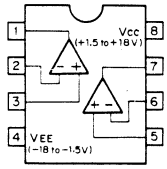

BQ4011YMA-100 (BENCHMARQ)

C-MOS 32Kx8 NONVOLATILE SRAM
– TOP VIEW –

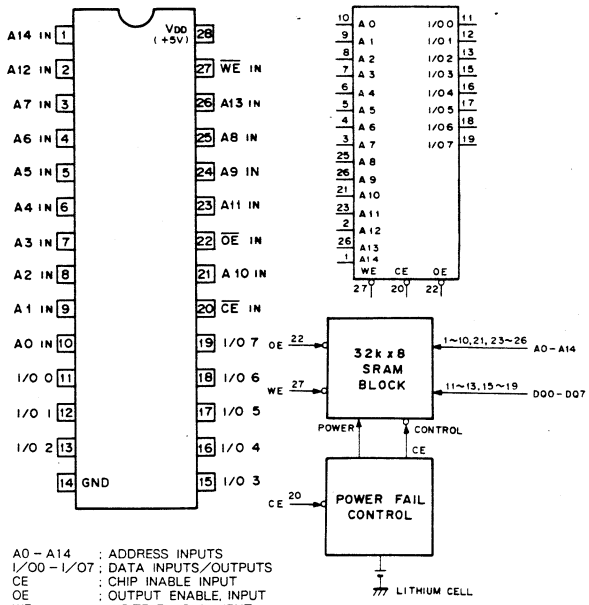

A0 – A14 ; ADDRESS INPUTS
I/O0 – I/O7 ; DATA INPUTS/OUTPUTS
CE ; CHIP INABLE INPUT
OE ; OUTPUT ENABLE, INPUT
WE ; WRITE ENABLE INPUT

CY7C199-45PC (CYPRESS)

C-MOS 32K (32768x8)-BIT STATIC RAM
– TOP VIEW –

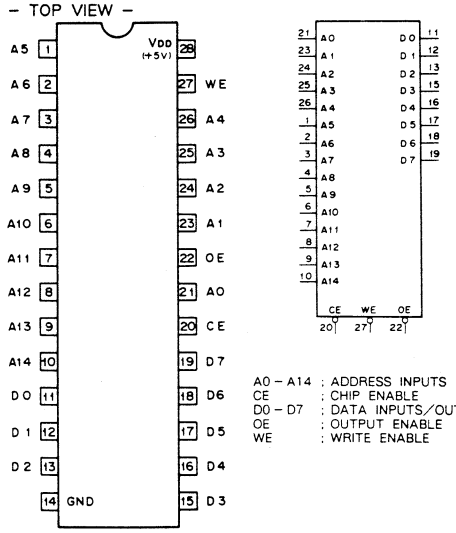

A0 – A14 ; ADDRESS INPUTS
CE ; CHIP ENABLE
D0 – D7 ; DATA INPUTS/OUTPUTS
OE ; OUTPUT ENABLE
WE ; WRITE ENABLE

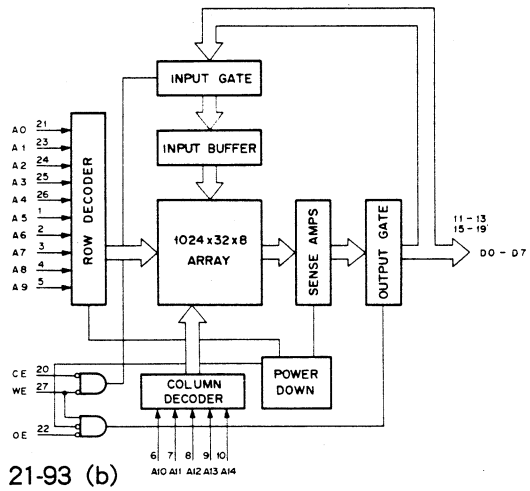

HM514402BZ-8 (HITACHI)

C-MOS 4M (1,048,576WORDx4)-BIT DYNAMIC RAM
– SIDE VIEW –

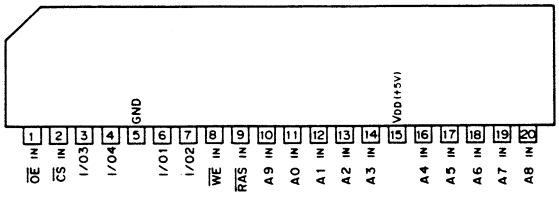

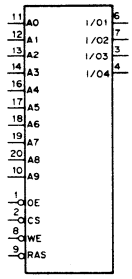

INPUT
A0 – A9 ; ADDRESS
CS ; CHIP SELECT
OE ; OUTPUT ENABLE
RAS ; ROW ADDRESS STROBE
WE ; READ/WRITE ENABLE

INPUT/OUTPUT
I/O1 – I/O4 ; DATA

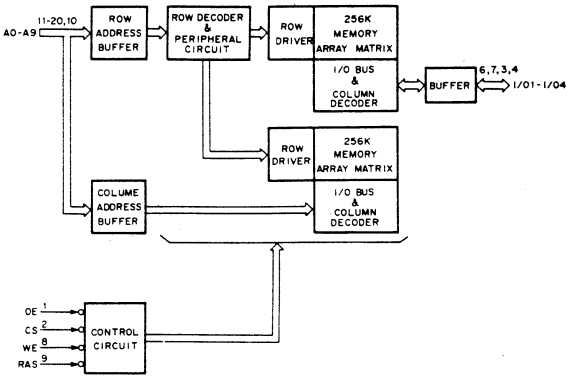

MC34051P (MOTOROLA)

RS-422 DRIVER/RECEIVER
– TOP VIEW –

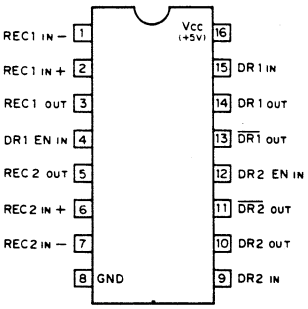

DR EN	MODE
0	DISABLE
1	ENABLE

0 ; LOW LEVEL
1 ; HIGH LEVEL

DR ; DRIVER
DR EN ; DRIVER ENABLE
REC ; RECEIVER

DRIVER CIRCUIT

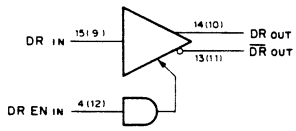

RECEIVER CIRCUIT

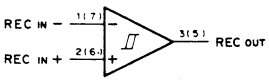

MC74HC175F (MOTOROLA) FLAT PACKAGE

C-MOS D-TYPE FLIP-FLOP WITH CLEAR

– TOP VIEW –

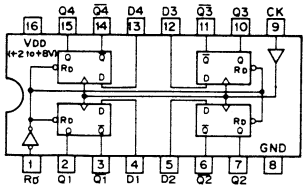

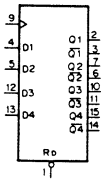

RD	CK	D	Q	Q̄
0	X	X	0	1
1	↑	1	1	0
1	↑	0	0	1
1	0	X	Q0	Q̄0

0 ; LOW LEVEL
1 ; HIGH LEVEL
X ; DON'T CARE

TC55416P-25 (TOSHIBA)

C-MOS 64K (16,384x4)-BIT STATIC RAM

– TOP VIEW –

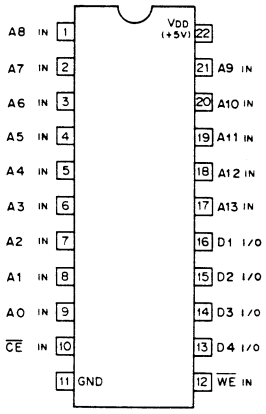

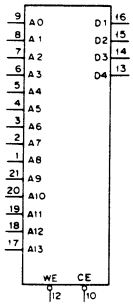

CE	WE	MODE	D1 – D4
1	X	NON SELECT	HI-Z
X	1	NON SELECT	HI-Z
0	0	WRITE	INPUT
0	1	READ	OUTPUT

A0 – A13 ; ADDRESS INPUTS
CE ; CHIP ENABLE INPUT
D1 – D4 ; DATA INPUTS/OUTPUTS
WE ; WRITE ENABLE INPUT

0 ; LOW LEVEL
1 ; HIGH LEVEL
X ; DON'T CARE
HI-Z ; HIGH IMPEDANCE

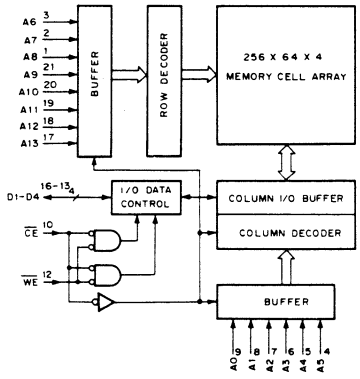

TC74HC352AF (TOSHIBA) FLAT PACKAGE

C-MOS 4-LINE-TO-1-LINE DATA SELECTOR/MULTIPLEXER

– TOP VIEW –

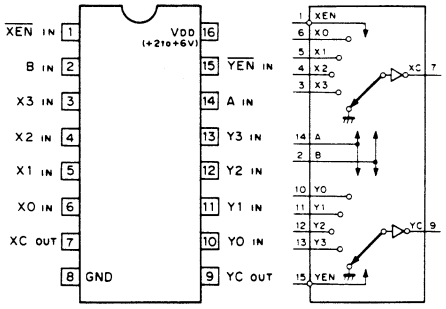

ENABLE EN	SELECT IN A	SELECT IN B	ON CHANNEL
1	X	X	VDD
0	0	0	0
0	1	0	1
0	0	1	2
0	1	1	3

0 ; LOW LEVEL
1 ; HIGH LEVEL
X ; DON'T CARE

SM5843AP1 (NPC)

C-MOS DIGITAL FILTER

– TOP VIEW –

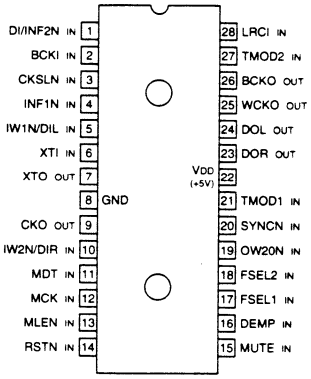

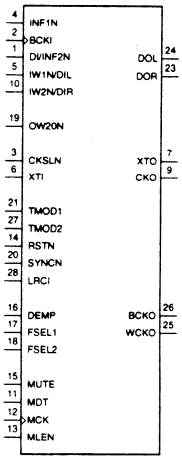

INPUT

BCKI ; INPUT BIT CLOCK
CKSLN ; INPUT FREQUENCY SELECT (H: 384fs/L: 256fs)
DEMP ; DE-EMPHASIS CONTROL (L: OFF/H: ON)
DI/INF2N ; INPUT DATA (INF1N = L)/INPUT FORMAT SELECT 2 (INF1N = H)
FSEL1, 2 ; DE-EMPHASIS SELECT

fs (Hz)		32k	44.1k	48k	TEST MODE
SETTING	FSEL1	H	L	L	H
	FSEL2	H	L	H	L

INF1N ; INPUT FORMAT SELECT 1
IW1N/DIL ; INPUT WORD LENGTH 1 (INF1N = L)/Lch DATA INPUT (TNF1N = H)
IW2N/DIR ; INPUT WORD LENGTH 2 (INF1N = L)/Rch DATA INPUT (TNF1N = H)
LRCI ; SAMPLE RATE CLOCK (fs)
MCK ; ATTENUATION BIT CLOCK
MDT ; ATTENUATION SERIAL DATA
MLEN ; ATTENUATION LATCH CLOCK
MUTE ; MUTE CONTROL
OW20N ; OUTPUT WORD LENGTH

OUTPUT WORD LENGTH (BIT)	18	20
OW20N	H	L

RSTN ; SYSTEM RESET (L: RESET/H: NORMAL)
SYNCN ; SYNC MODE SELECT (L: EXECUTION SYNC MODE/H: JITTER FREE MODE)
TMOD1 ; DITHER ON/OFF SELECT (L: ON/H: OFF)
TMOD2 ; FILTER CHARACTER SELECT
XTI ; OSCILLATOR INPUT

OUTPUT

BCKO ; OUTPUT BIT CLOCK
CKO ; OSCILLATOR OUTPUT CLOCK
DOL ; Lch DATA
DOR ; Rch DATA
WCKO ; OUTPUT WORD CLOCK
XTO ; OSCILLATOR OUTPUT

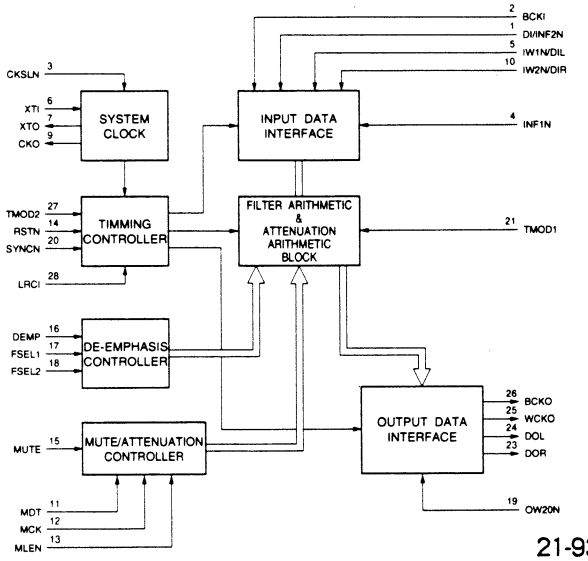

AM27C512-150DC (AMD)
AM27C512-155DC (AMD)
TMS27C512-15JL (TI)
TMS27C512-20JL (TI)

C-MOS 512K (65,536x8 = 524,288)-BIT ERASABLE PROM
– TOP VIEW –

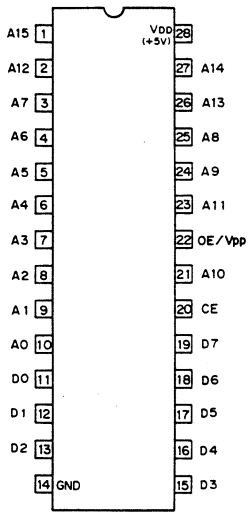

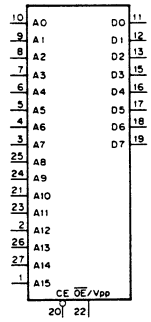

A0 – A15 : ADDRESS INPUTS
CE : CHIP ENABLE INPUT
D0 – D7 : DATA OUTPUTS
OE : OUTPUT ENABLE INPUT
V_{PP} : PROGRAM POWER SUPPLY

An	CE	$\overline{OE}/V_{PP}$	V_{DD}	Dn	FUNCTION
A_{IN}	0	0	+5V	D_{OUT}	READ
A_{IN}	0	1	+5V	HI-Z	OUTPUT DISABLE
X	1	X	+5V	HI-Z	STANDBY
A_{IN}	0	+12.5V	+6V	D_{IN}	PGM
A_{IN}	0	0	+6V	D_{OUT}	PGM VERIFY
X	1	+12.5V	+6V	HI-Z	PGM INH

0 : LOW LEVEL
1 : HIGH LEVEL
X : DON'T CARE
HI-Z : HIGH IMPEDANCE

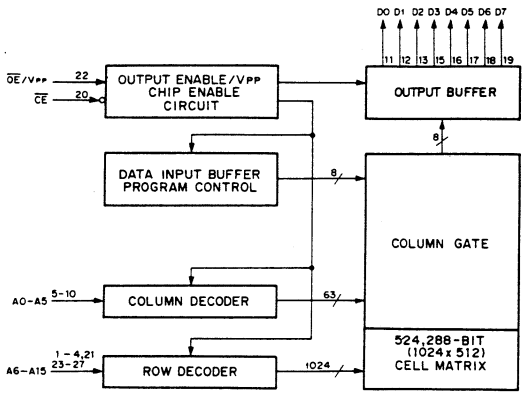

AT28C64-15PC (ATMEL) (ACCESS TIME = 150nS)

C-MOS 64K (8Kx8) ELECTRICALLY ERASABLE PROM
– TOP VIEW –

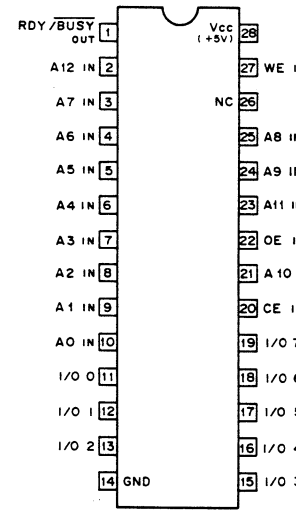

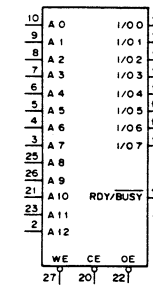

A0 – A12 : ADDRESS INPUTS
I/O0 – I/O7 : DATA INPUTS/OUTPUTS
CE : CHIP INABLE INPUT
OE : OUTPUT ENABLE, INPUT
WE : WRITE ENABLE INPUT
RDY/$\overline{BUSY}$: READY/$\overline{BUSY}$ OUTPUT

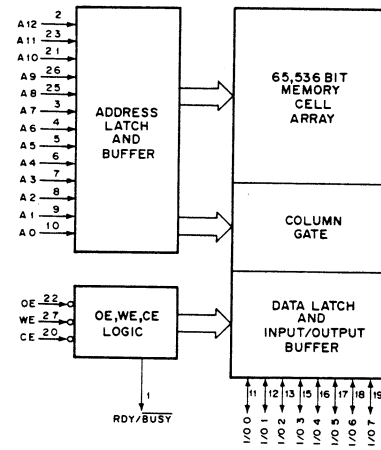

CY7C225-30PC (CYPRESS) (ACCESS TIME = 30nS)

C-MOS 4K (512x8)-BIT PROM WITH REGISTER

– TOP VIEW –

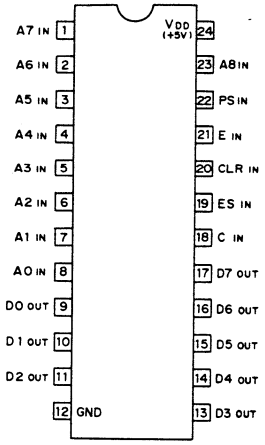

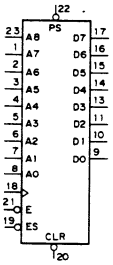

A0 – A14 : ADDRESS INPUTS
CLR : CLEAR INPUT
CK : CLOCK INPUT
D0 – D7 : DATA OUTPUTS
E : ASYNCHRONOUS ENABLE INPUT
ES : SYNCHRONOUS ENABLE INPUT
PS : PRESET INPUT

MODE SELECTION

CK	ES	CLR	E	PS	OUTPUTS	MODE
×	0	1	0	1	DATA OUT	READ
×	1	1	×	1	HI-Z	OUTPUT DISABLE
×	×	1	1	1	HI-Z	OUTPUT DISABLE
×	0	0	0	1	ZEROS	CLEAR
×	0	1	0	0	ONES	PRESET
0	1	V_{PP}	1	1	DATA IN	PROGRAM
1	0	V_{PP}	1	1	DATA OUT	PROGRAM VERIFY
1	1	V_{PP}	1	1	HI-Z	PROGRAM INHIBIT
0	1	V_{PP}	1	1	DATA IN	INTELLIGENT PROGRAM
V_{PP}	0	0	0	1	DATA OUT	BLANK CHECK ONES
V_{PP}	1	0	0	1	HI-Z	BLANK CHECK ZEROS

0 : LOW LEVEL
1 : HIGH LEVEL
× : DON'T CARE (NOT TO EXCEED V_{PP})
HI-Z : HIGH IMPEDANCE
V_{PP} : PROGRAM VOLTAGE (+13V TO +14V)

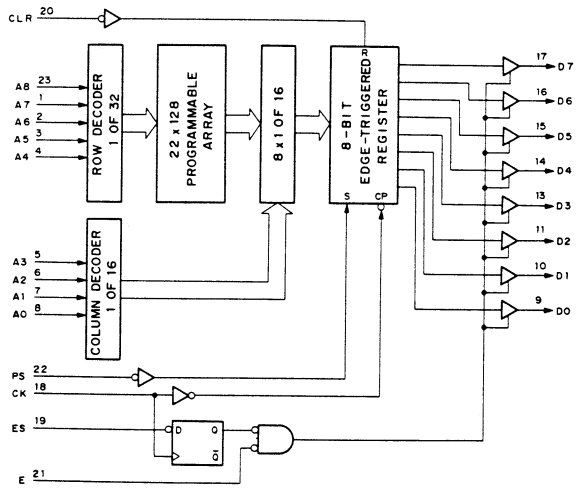

CY7C245A-35PC (CYPRESS)

C-MOS 16K (2048x8)-BIT PROM

– TOP VIEW –

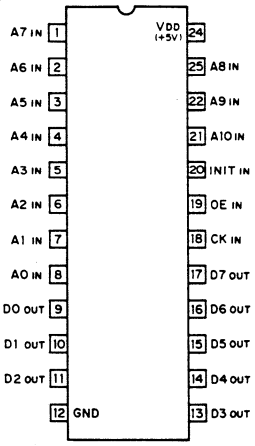

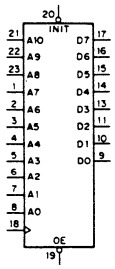

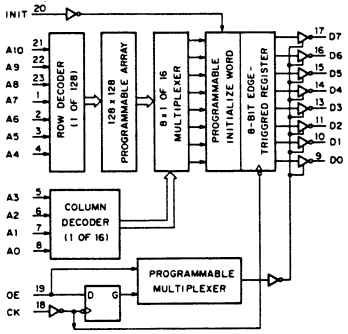

AO–A10 ; ADDRESS INPUTS
CK ; CLOCK INPUT
DO–D7 ; DATA OUTPUTS
INIT ; INITIALIZATION INPUT
OE ; OUTPUT ENABLE

CY7C235-30PC (CYPRESS SEMI.) (ADDRESS SETUP TIME = 30nS)

8K (1024x8) REGISTERED OUTPUT PROM (3-STATE OUTPUT)

– TOP VIEW –

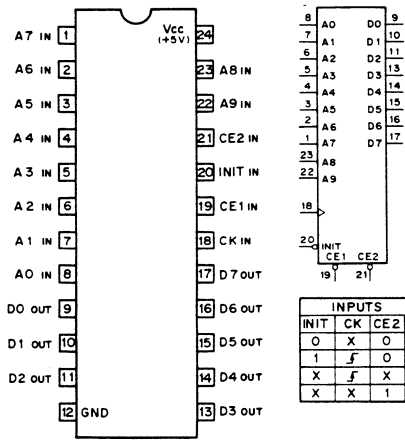

0 ; LOW LEVEL
1 ; HIGH LEVEL
X ; DON'T CARE
HI-Z ; HIGH IMPEDANCE

INPUTS				OUTPUTS (D0-D7)
INIT	CK	CE2	CE1	
0	X	0	0	INITIAL DATA
1	∫	0	0	PROM DATA
X	∫	X	1	HI-Z
X	X	1	X	HI-Z

A0-A9 ; ADDRESS INPUTS
D0-D7 ; DATA OUTPUTS
CE2 ; ASYNCHRONOUS CHIP ENABLE INPUT
CE1 ; SYNCHRONOUS CHIP ENABLE INPUT
CK ; CLOCK INPUT
INIT ; ASYNCHRONOUS INTIALIZE INPUT

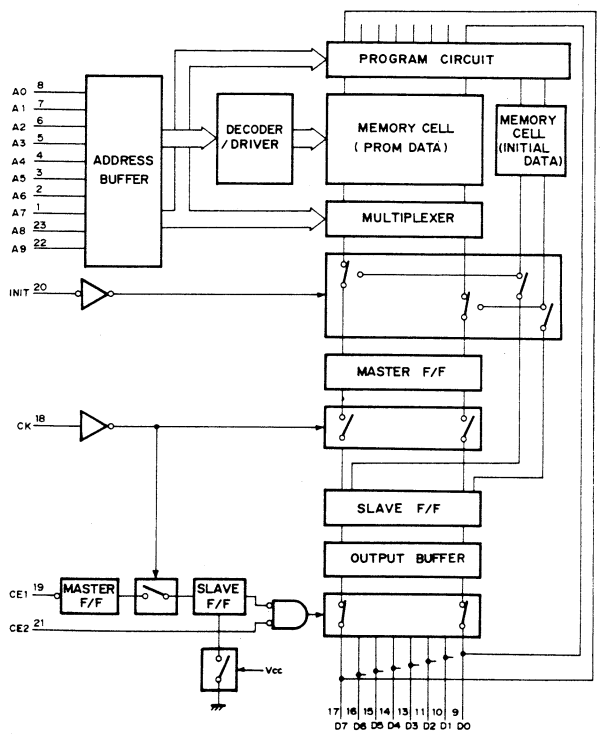

CY7C291L-35PC (CYPRESS)

C-MOS 16K (2048x8)-BIT EPROM

– TOP VIEW –

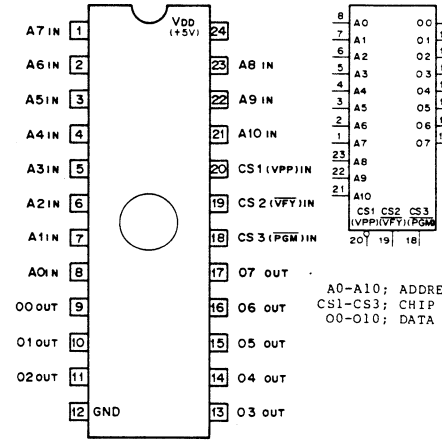

A0-A10; ADDRESS INPUT
CS1-CS3; CHIP SELECT
O0-O10; DATA OUTPUT

MODE SELECTION

CS1	CS2	CS3	OUTPUTS	MODE
0	1	1	DATA OUT	READ
1	X	X	HI-Z	OUTPUT DISABLE
X	0	X	HI-Z	OUTPUT DISABLE
X	X	0	HI-Z	OUTPUT DISABLE
VPP	1	0	DATA IN	PROGRAM
VPP	0	1	DATA OUT	PROGRAM VERIFY
VPP	1	1	HI-Z	PROGRAM INHIBIT
VPP	1	0	DATA IN	INTELLIGENT PROGRAM
0	0	VPP	ONES	BLANK CHECK ONES
0	1	VPP	ZEROS	BLANK CHECK ZEROS

0; LOW LEVEL
1; HIGH LEVEL
X; DON'T CARE
(NOT TO EXCEED VDD +5%)
HI-Z; HIGH IMPEDANCE
VPP; PROGRAMING VOLTAGE
(+13V to +14V)

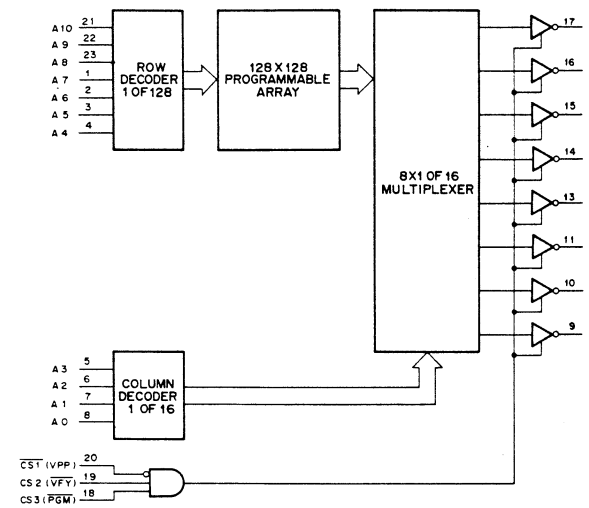

HN27C4096G-10 (HITACHI)

C-MOS 4M (262144x4)-BIT UV ERASABLE AND PROM
– TOP VIEW –

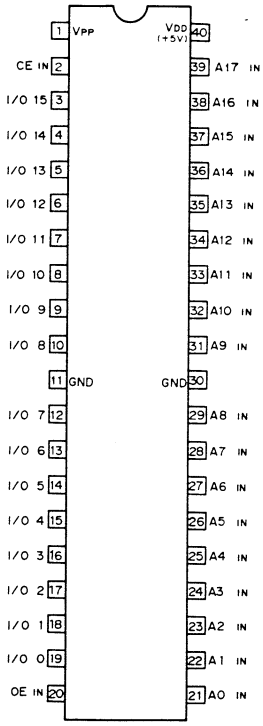

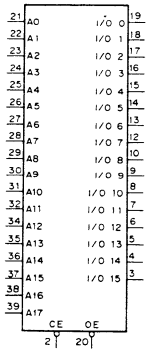

A0 – A17 ; ADDRESS INPUTS
CE ; CHIP ENABLE INPUT
D0 – D15 ; DATA INPUT/OUTPUTS
OE ; OUTPUT ENABLE INPUT
VPP ; PROGRAM VOLTAGE INPUT
NORMAL : +5V, PROGRAM : +12.5V

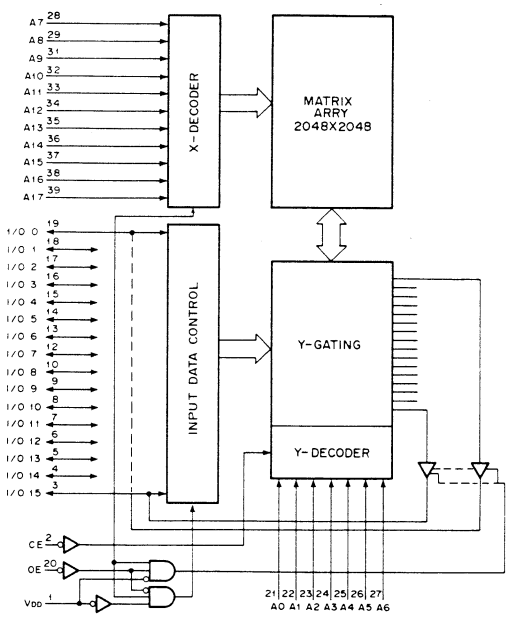

AT27HC642-35DC (ATMEL)

C-MOS 64K (8192x8)-BIT UV EPROM
– TOP VIEW –

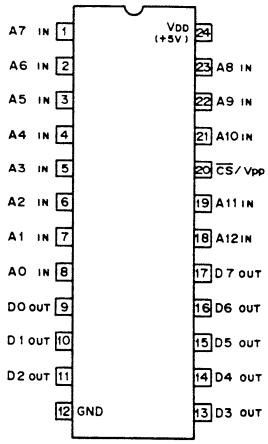

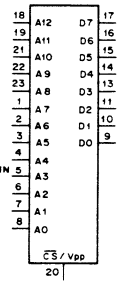

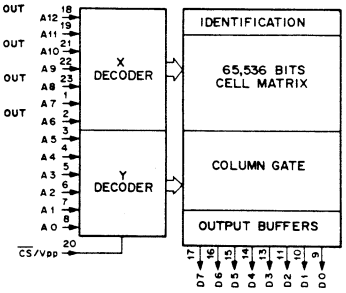

A0–A12 ; ADDRESS INPUTS
CS/Vpp ; CHIP SELECT INPUT
PROGRAM POWER SUPPLY INPUT
D0 – D7 ; DATA INPUT

HN27C1024HG-85 (HITACHI)

C-MOS 1M (65536x16)-BIT UV EPROM

– TOP VIEW –

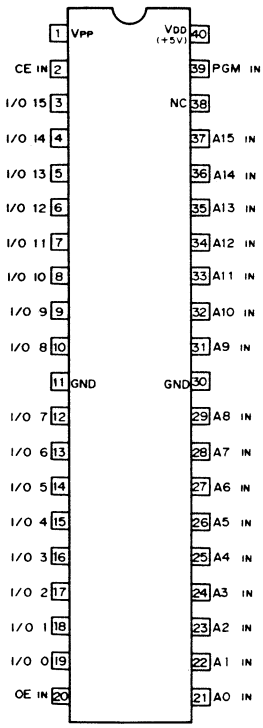

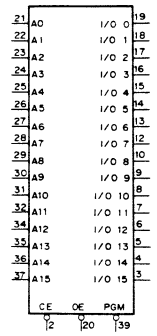

A0 – A15	: ADDRESS INPUTS
CE	: CHIP ENABLE INPUT
I/O0 – I/O15	: DATA INPUTS/OUTPUTS
OE	: OUTPUT ENABLE INPUT
PGM	: PROGRAM ENABLE INPUT
V_{PP}	: PROGRAM VOLTAGE INPUT NORMAL : +5V, PROGRAM : +12.5V

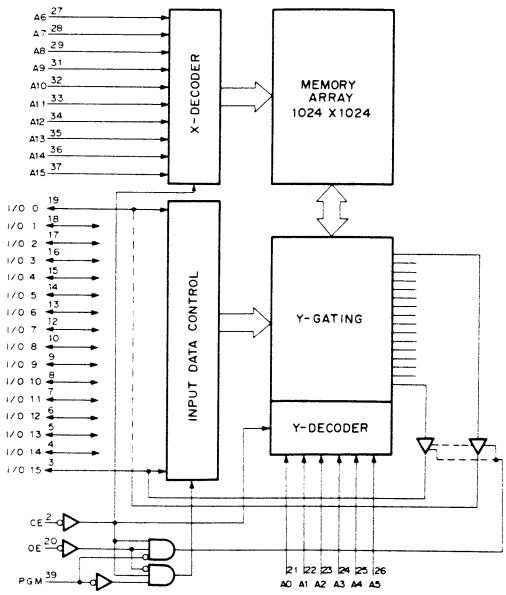

EPM5032DC-2 (ALTERA)
EPM5032PC-2 (ALTERA)

C-MOS PROGRAMMABLE LOGIC DEVICE
– TOP VIEW –

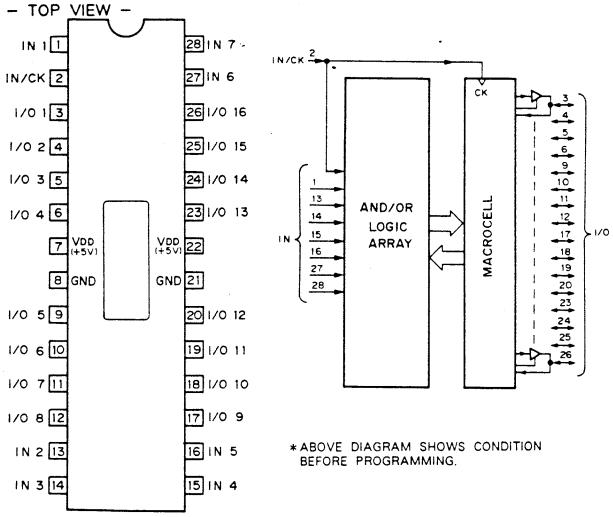

* ABOVE DIAGRAM SHOWS CONDITION BEFORE PROGRAMMING.

PAL20RA10CNS (AMD) (ACCESS TIME = 20nS)

TTL PROGRAMMABLE LOGIC DEVICE
– TOP VIEW –

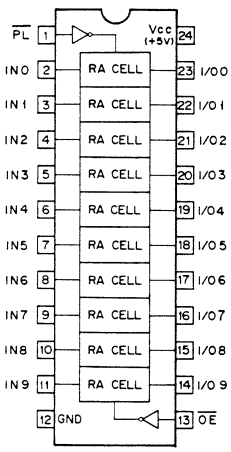

* ABOVE DIAGRAM SHOWS CONDITIONS BEFORE PROGRAMMING.

PALCE16V8H-15PC (AMD/MONOLITHIC MEMORIES)
PALCE16V8H-15PC/4 (AMD/MONOLITHIC MEMORIES)
PALCE16V8H-25PC (AMD/MONOLITHIC MEMORIES)
PALCE16V8Q-25PC (AMD/MONOLITHIC MEMORIES)
PALCE16V8Q-25PC/4 (AMD/MONOLITHIC MEMORIES)

C-MOS ELECTRICALLY ERASABLE PROGRAMMABLE LOGIC DEVICE
– TOP VIEW –

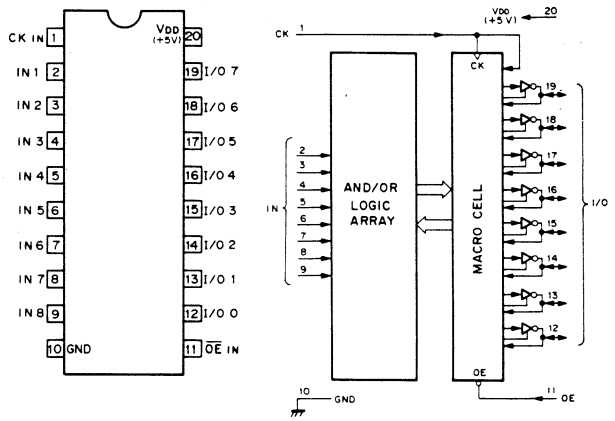

* ABOVE DIAGRAM SHOWS CONDITIONS BEFORE PROGRAMMING.

PALCE20V8H-15PC (AMD/MONOLITHIC MEMORIES)
PALCE20V8H-15PC/4 (AMD/MONOLITHIC MEMORIES)

C-MOS ELECTRICALLY ERASABLE PROGRAMMABLE LOGIC DEVICE
– TOP VIEW –

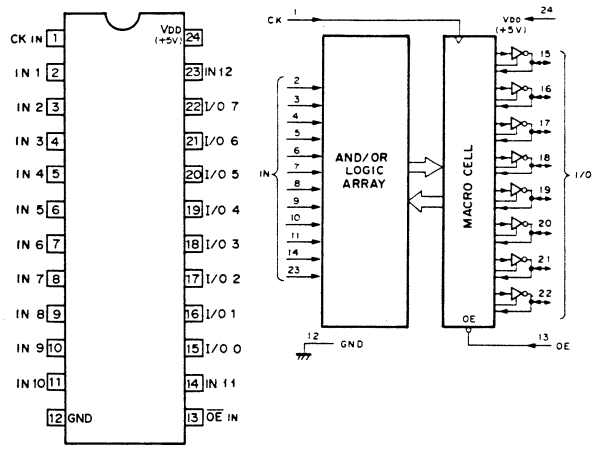

* ABOVE DIAGRAM SHOWS CONDITIONS BEFORE PROGRAMMING.

PALCE22V10H-15PC (AMD/MONOLITHIC MEMORIES)
PALCE22V10H-15PC/4 (AMD/MONOLITHIC MEMORIES)
PALCE22V10H-25PC (AMD/MONOLITHIC MEMORIES)
PALCE22V10H-25PC/4 (AMD/MONOLITHIC MEMORIES)

C-MOS PROGRAMMABLE LOGIC DEVICE
– TOP VIEW –

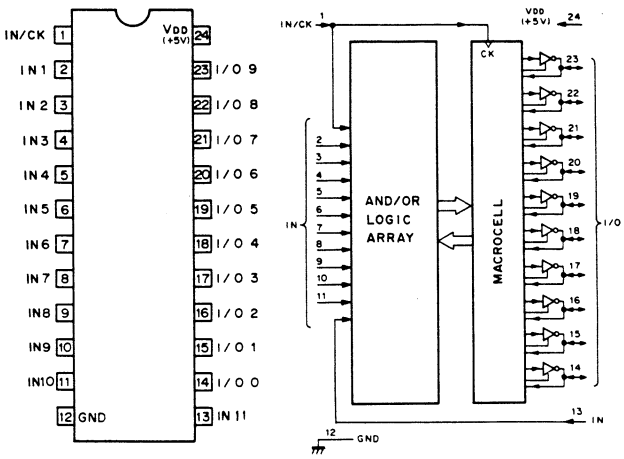

* ABOVE DIAGRAM SHOWS CONDITIONS BEFORE PROGRAMMING.

SECTION 22
REPLACEABLE PART AND OPTIONAL FIXTURE

22-1. NOTES ON REPAIR PARTS

(1) Safety Related Components Warning

Components marked with ⚠ on the schematic diagrams, exploded views and electrical spare parts list are critical to safe operation. Replace these components with Sony parts whose part numbers appear in this manual or in service bulleti and service manual supplements published by Sony.

(2) Standardization of Parts

Repair parts supplied from sony Parts Center may not be always identical with the parts which actually in use due to "accommodating the improved parts and/or engineering changes" or "standardization of genuine parts".

This manual's exploded views and electrical spare parts list are indicating the part numbers of "the standardized genuine parts at present".

(3) Stock of Parts

Parts marked with "o" SP(Supply Code)column of the spare parts list are not normally required for routine service work. Orders for parts marked with "o" will be processed, but allow for additional delivery time.

(4) Units for Capacitors, Inductors and Resistors

The following units are assumed in schematic diagrams, electrical parts list and exploded views unless otherwise specified.

Capacitors : μ F
Inductors : μ H
Resistors : Ω

補修用部品注意事項

(1) 安全重要部品

回路図、分解図、電気部品表中、⚠印の部品は安全性を維持するために重要な部品です。 従ってこれらの部品を交換するときには必ず指定の部品と交換して下さい。

(2) 部品の共通化

ソニーから供給される部品セットに実装されているものと異なることがあります。 これは部品の共通化、改良等によるものです。

分解図や電気部品表には現時点での共通化された部品が記載されています。

(3) 部品の在庫

部品表のSP (Supply code) 欄にoで示される部品は交換頻度が低い部品ですので在庫していないことがあり、納期が長くなることがあります。

(4) コンデンサー、インダクター、抵抗の単位

回路図、分解図、電気部品表中、特に明記したものを除き、下記の単位は省略されています。

コンデンサー : μ F
インダクター : μ H
抵抗 : Ω

22-2. EXPLODED VIEW

Location of Mechanical Main Parts and Components.

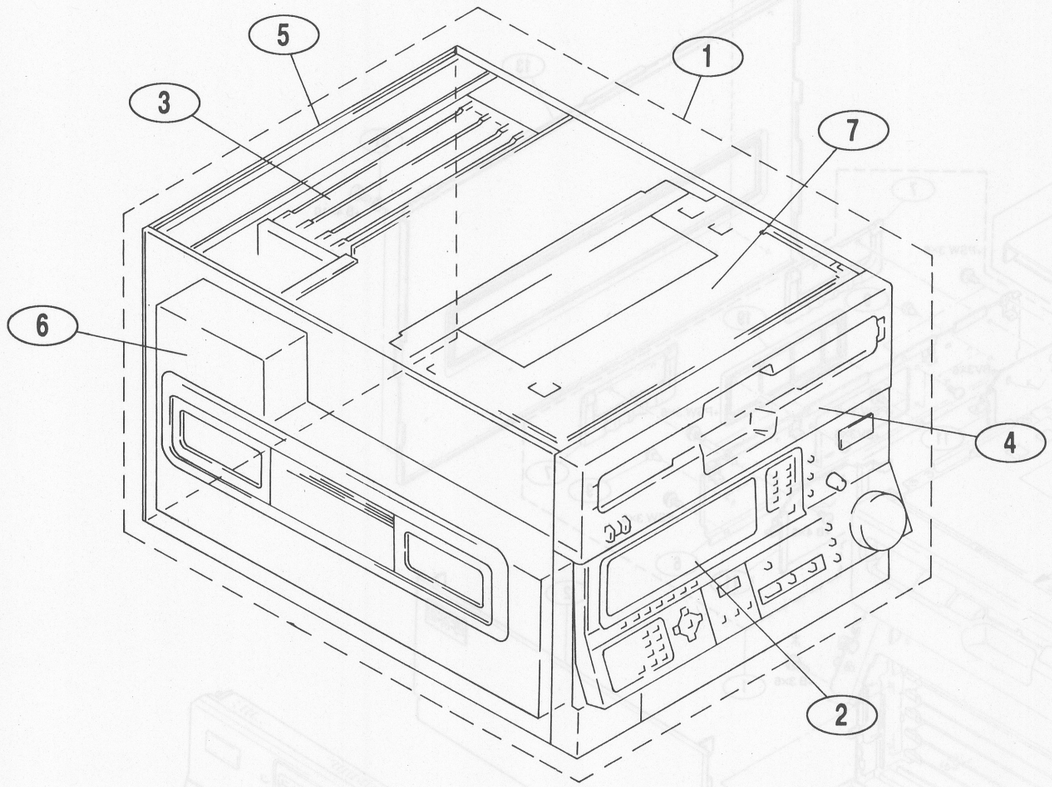

TTP (Tape Trans Port) Block

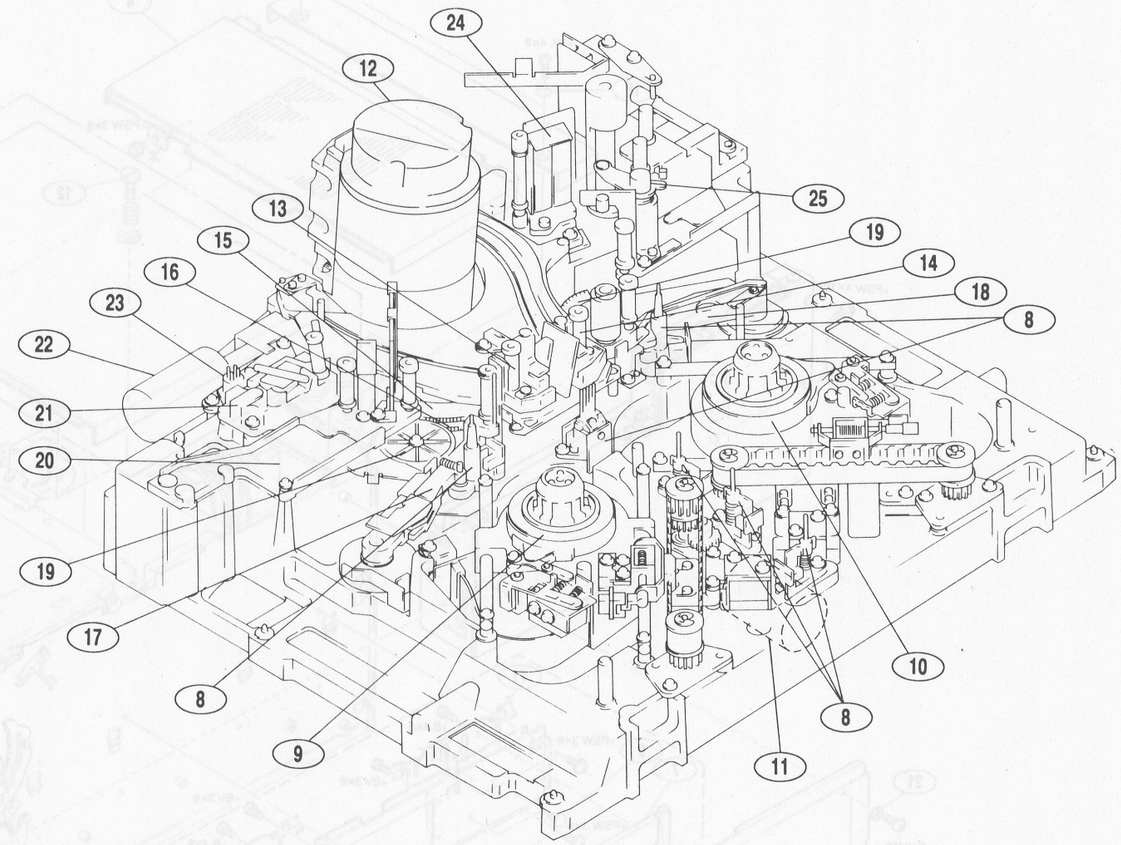

No.	DESCRIPTION	EXPLODED VIEW	PAGE
①	ORNAMENTAL PANEL	• MAIN BLOCK	22-4
②	FUNCTION CONTROL PANEL	• FUNCTION CONTROL PANEL	22-6
③	CARD RACK (PCB)	• CARD RACK BLOCK	22-8
④	FRONT PANEL ASSEMBLY	• FRONT BLOCK	22-10
⑤	CONNNECTOR PANEL ASSEMBLY	• REAR PANEL BLOCK	22-12
⑥	POWER ASSEMBLY	• POWER SUPPLY BLOCK	22-14
⑦	CASSETTE COMPARTMENT ASSEMBLY	• CASSETTE COMPARTMENT BLOCK (1)	22-16
		• CASSETTE COMPARTMENT BLOCK (2)	22-18
⑧	CASSETTE SENSOR ASSEMBLY	• CASSETTE SENSOR BLOCK	22-20
⑨	S REEL TABLE ASSEMBLY	• S REEL TABLE BLOCK	22-22
⑩	T REEL TABLE ASSEMBLY	• T REEL TABLE BLOCK	22-24
⑪	SHIFT MOTOR ASSEMBLY	• REEL TABLE DRIVING BLOCK	22-26
⑫	DRUM ASSEMBLY	• DRUM BLOCK	22-28
⑬	S SLIDER ASSEMBLY	• S/T SLIDER BLOCK	22-30
⑭	T SLIDER ASSEMBLY		

No.	DESCRIPTION	EXPLODED VIEW	PAGE
⑮	S LOADING GEAR	• S/T LOADING GEAR BLOCK	22-32
⑯	T LOADING GEAR		
⑰	S ARM ASSEMBLY (INCLUDE S SEDE TENSION REGULATOR ASSEMBLY)	• S/T DRWING ARMS AND DRIVING GEAR BLOCK	22-34
⑱	T ARM ASSEMBLY		
⑲	DRIVING GEAR		
⑳	S PLATE ASSEMBLY	• S PLATE/S SLANT BASE BLOCK	22-36
㉑	S SLANT BASE ASSEMBLY		
㉒	LOADING MOTOR ASSEMBLY	• LOADING MORTOR AND M GEAR BOX BLOCK	22-38
㉓	M GEAR BOX ASSEMBLY		
㉔	AU HEAD ASSEMBLY	• AU HEAD/PINCH ROLLER PRESS/T PLATE BLOCK	22-40
㉕	T SIDE TENSION REGULATOR ASSEMBLY		

22-3

MAIN BLOCK

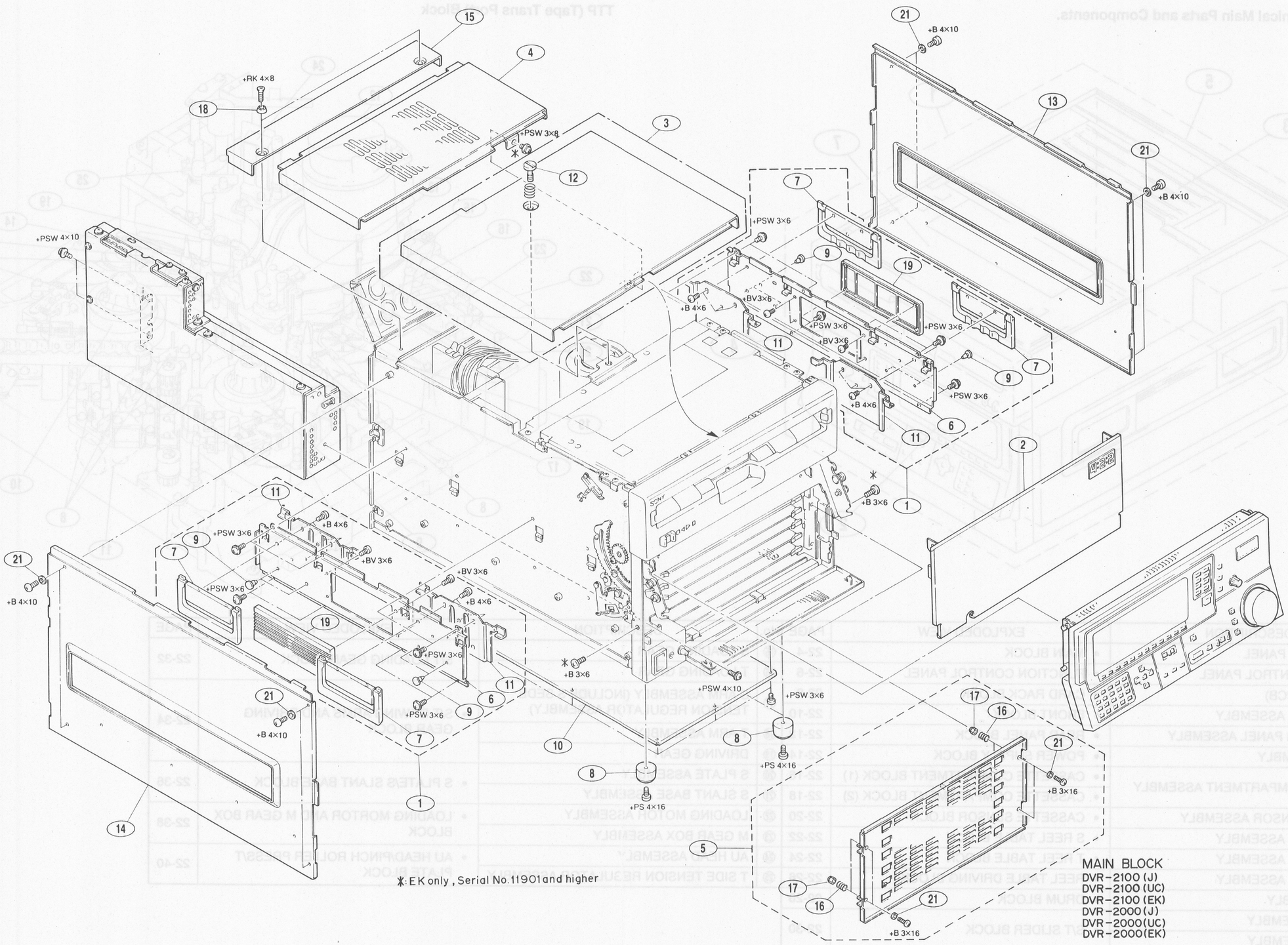

✱: EK only, Serial No.11901and higher

MAIN BLOCK
DVR-2100 (J)
DVR-2100 (UC)
DVR-2100 (EK)
DVR-2000 (J)
DVR-2000 (UC)
DVR-2000 (EK)

MAIN BLOCK, DVR-2000/2100

No.	Part No.	SP	Description
1	A-6003-052-A	o	TABLE ASSY, HANDLE
2	A-6003-054-B	o	PANEL ASSY, BLANK
3	A-6003-055-B	o	PLATE (1) ASSY, TOP
4	X-3165-980-1	o	PLATE (2) ASSY, TOP
5	A-6003-064-C	o	PLATE ASSY, SHIELD, FRONT
6	X-3165-927-1	o	DECK ASSY, HANDLE
7	X-3743-007-1	o	HANDLE ASSY
8	X-4836-202-X	s	FOOT ASSY
9	2-362-365-00	s	FOOT, RUBBER
10	3-170-492-01	o	LID, BOTTOM
11	3-170-517-02	o	PLATE, REAR, HANDLE DECK
12	3-170-828-01	o	SCREW, PLATE, TOP
13	3-170-864-01	o	PANEL, R
14	3-170-865-01	o	PANEL, L
15	3-170-866-01	o	PLATE (3), TOP
16	3-576-921-00	s	SPRING, COMPRESSION
17	4-334-513-00	s	NUT, NYLON
18	3-703-225-00	s	WASHER (4 DIA.), ORNAMENTAL
19	3-737-251-01	o	PLATE, ORNAMENTAL
21	7-688-003-12	s	W 3, MIDDLE

FUNCTION CONTROL PANEL BLOCK(BKDV-2010), DVR-2000/2100

No.	Part No.	SP	Description
101	A-6031-119-B	o	CONTROL PANEL ASSY
102	X-3166-574-1	o	PLATE ASSY, BOTTOM
103	X-3715-476-2	o	PLATE (RIGHT) ASSY, INDICATION
104	X-3715-477-2	o	PLATE (LEFT) ASSY, INDICATION
105	1-454-569-13	s	CLATCH, ELECTROMAGNETIC
106	1-466-580-11	s	ENCODER, ROTARY
107	1-550-685-11	s	DISPLAY UNIT, EL
108	2-143-746-02	o	HOLDER, DME
109	3-171-216-01	o	SHEET, PANEL
110	3-174-878-01	o	SUPPORT, PC BOARD
111	3-171-218-01	o	FILTER, LED
112	3-171-226-01	s	KEY, MENU
113	3-171-227-01	s	KEY, SELECT
114	3-714-595-01	o	KNOB, DIAL
115	3-714-596-01	o	DIAL
116	3-715-864-01	s	KEY, TEN
117	3-724-894-01	s	CAP
118	3-174-879-01	s	NUT

FUNCTION CONTROL PANEL BLOCK

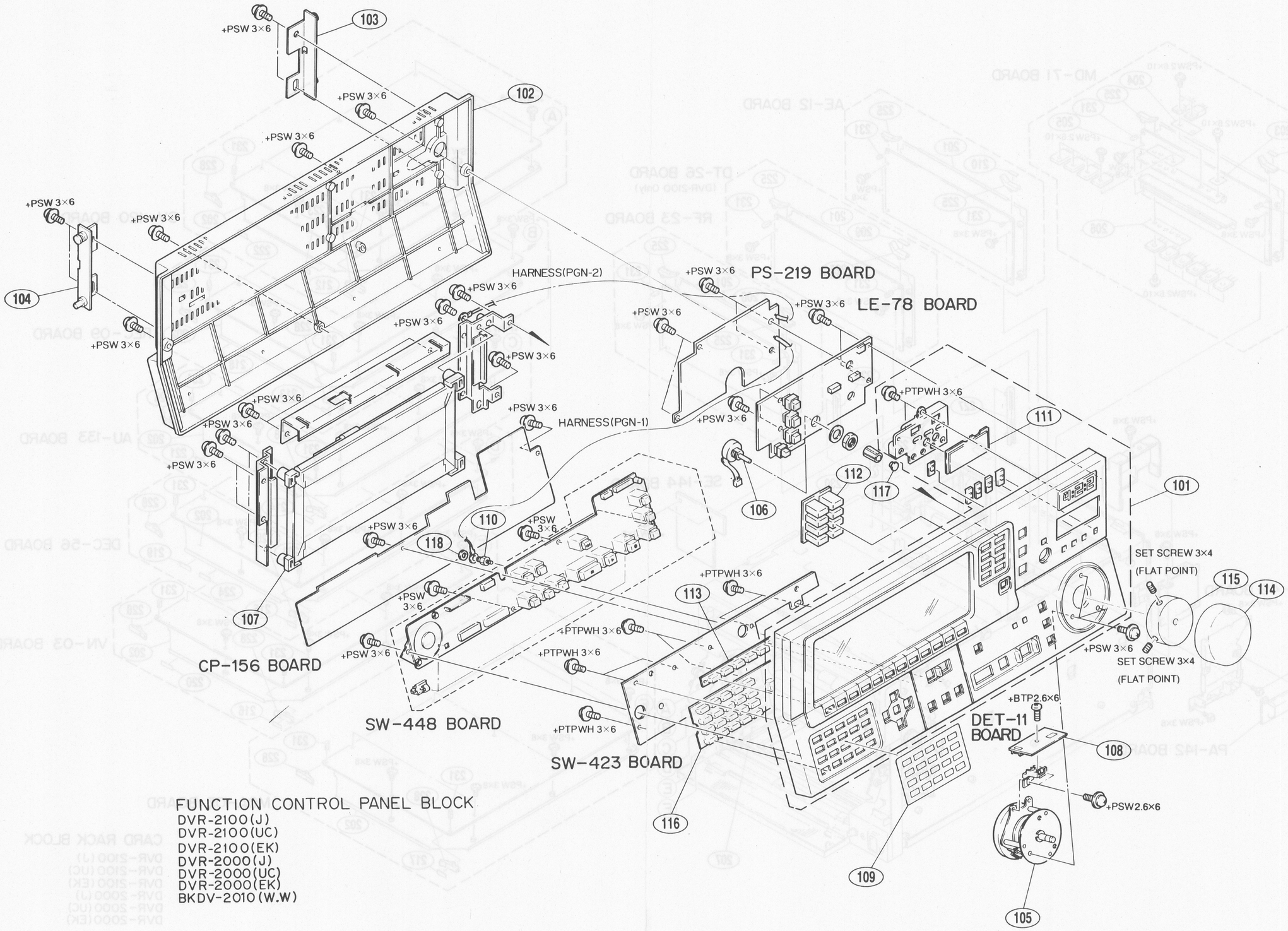

FUNCTION CONTROL PANEL BLOCK
DVR-2100(J)
DVR-2100(UC)
DVR-2100(EK)
DVR-2000(J)
DVR-2000(UC)
DVR-2000(EK)
BKDV-2010(W.W)

22-7

CARD RACK BLOCK

CARD RACK BLOCK

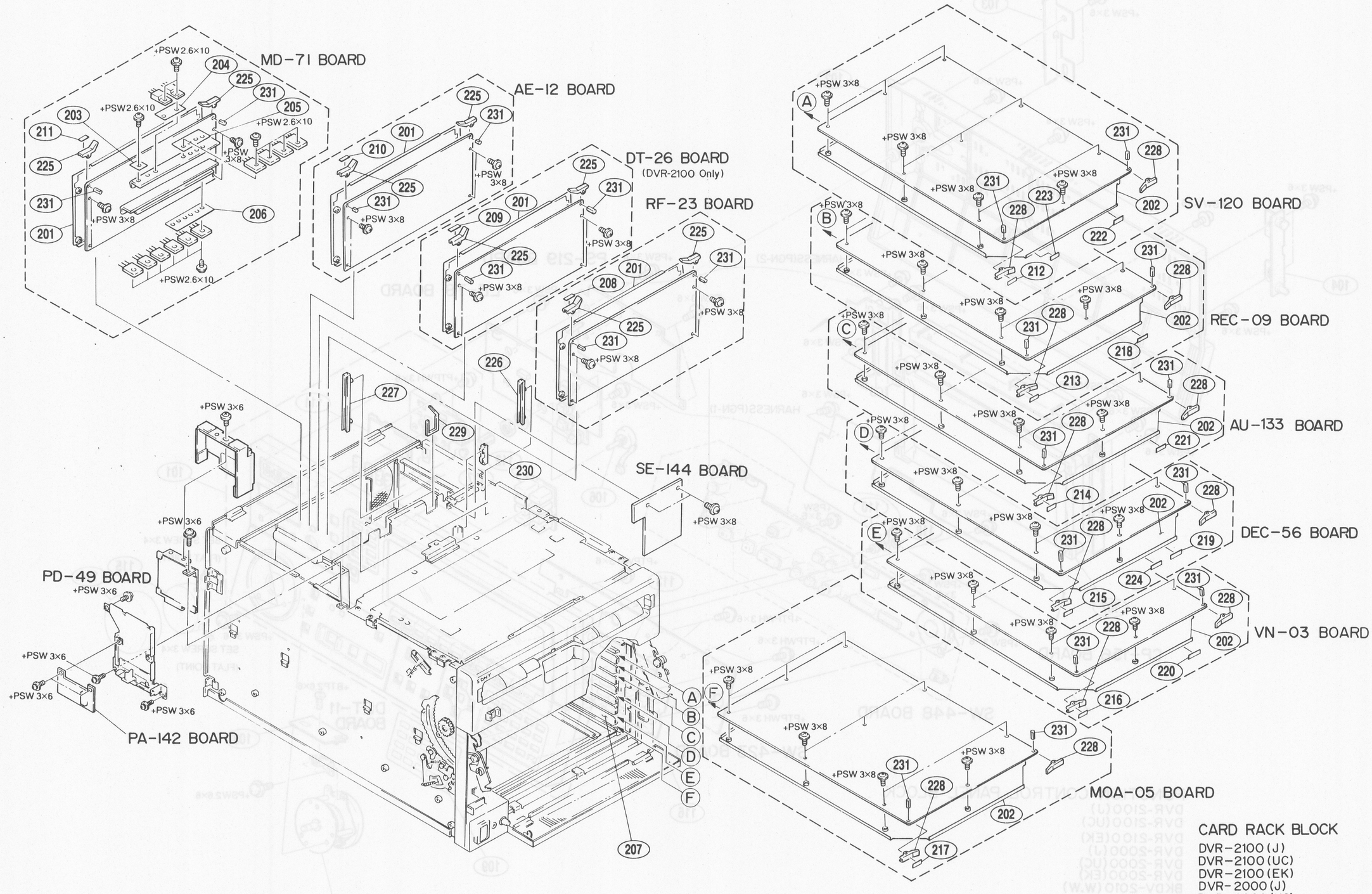

CARD RACK BLOCK

DVR-2100 (J)
DVR-2100 (UC)
DVR-2100 (EK)
DVR-2000 (J)
DVR-2000 (UC)
DVR-2000 (EK)

22-8

CARD RACK BLOCK, DVR-2000/2100

No.	Part No.	SP	Description
201	X-3165-922-1	o	PLATE ASSY, SHIELD, TTP CARD PCB
202	X-3165-923-1	o	PC BOARD ASSY, PROC
203	3-170-629-01	o	SHEET (D), RADIATION
204	3-170-630-01	o	SHEET (C), RADIATION
205	3-170-631-01	o	SHEET (B), RADIATION
206	3-170-632-01	o	SHEET (A), RADIATION
207	3-170-642-01	o	RAIL, PC BOARD GUIDE
208	3-171-894-01	o	LABEL (V), SERIAL NUMBER
209	3-171-894-11	o	LABEL (V), SERIAL NUMBER
210	3-171-894-21	o	LABEL (V), SERIAL NUMBER
211	3-171-894-31	o	LABEL (V), SERIAL NUMBER
212	3-171-895-01	o	LABEL (P), SERIAL NUMBER
213	3-171-895-11	o	LABEL (P), SERIAL NUMBER
214	3-171-895-21	o	LABEL (P), SERIAL NUMBER
215	3-171-895-31	o	LABEL (P), SERIAL NUMBER
216	3-171-895-41	o	LABEL (P), SERIAL NUMBER
217	3-171-895-51	o	LABEL (P), SERIAL NUMBER
218	3-172-035-01	o	LABEL (1), SERIAL NUMBER, REC-09
219	3-172-036-01	o	LABEL (2), SERIAL NUMBER, DEC-56
220	3-172-037-01	o	LABEL (1), SERIAL NUMBER, VN-03
221	3-172-038-02	o	LABEL (1), SERIAL NUMBER, AU-133
222	3-172-039-01	o	LABEL (1), SERIAL NUMBER, SV-120
223	3-172-040-01	o	LABEL (2), SERIAL NUMBER, SV-120
224	3-172-041-01	o	LABEL (1), SERIAL NUMBER, DEC-56
225	3-673-249-11	o	LEVER, PC BOARD
226	3-673-676-01	s	RAIL, GUIDE, CHASSIS
227	3-673-676-11	s	RAIL, PC BOARD GUIDE
228	3-714-634-01	o	LEVER, PC BOARD
229	4-314-320-00	o	HOLDER, WIRE
230	4-335-930-00	o	GUIDE (S), P.C.B
231	7-626-320-11	s	PIN, SPRING 3X8

FRONT BLOCK, DVR-2000/2100

No.	Part No.	SP	Description
301	A-6003-053-A	o	ESCUTCHEON ASSY (For DVR-2100)
	A-6003-062-A	o	ESCUTCHEON ASSY (For DVR-2000)
302	A-6004-234-A	o	SUB FRAME ASSY, FRONT
303	A-6004-235-A	o	PANEL ASSY, FRONT
304	A-6004-236-A	o	PANEL ASSY, SWITCHING
305	A-6005-018-A	o	KNOB (RIGHT) ASSY, LOCK
306	A-6005-019-A	o	KNOB (LEFT) ASSY, LOCK
307	A-6049-077-C	o	JOINT ASSY
308	X-3165-902-1	o	PLATE ASSY, LOCK, PANEL
309	X-3165-910-2	o	SUPPORT (R) ASSY, PANEL
310	X-3165-911-2	o	SUPPORT (L) ASSY, PANEL
311	X-3165-919-1	o	FRAME ASSY, FRONT
312	X-3165-924-1	o	PANEL ASSY, FRONT
313	X-3715-497-1	s	KNOB (W) ASSY, VOLUME
314	X-3715-498-1	s	KNOB (2) ASSY, VOLUME
315	X-3735-809-1	o	BASE (RIGHT) ASSY, LOCK
316	X-3735-810-1	o	BASE (LEFT) ASSY, LOCK
317	X-3735-813-1	o	DAMPER (RIGHT) ASSY
318	X-3735-814-1	o	DAMPER (LEFT) ASSY
319	X-3735-815-1	o	DISK (RIGHT) ASSY
320	X-3735-816-1	o	DISK (LEFT) ASSY
321	X-3735-847-1	o	STAY (RIGHT) ASSY
322	X-3735-848-1	o	STAY (LEFT) ASSY
323	1-541-891-11	s	MOTOR, DC FAN (WITH FG)
324	1-543-590-11	s	CORE, TROIDAL
325	1-571-877-12	s	SWITCH, PUSH
326	2-362-365-00	s	FOOT, RUBBER
327	3-310-948-00	s	SPRING, TENSION
328	3-480-160-XX	s	SPRING, TENSION
329	3-578-398-00	s	SPRING, TENSION
330	3-654-058-00	o	SPACER 3X3
331	3-701-441-11	s	WASHER
332	3-701-788-XX	s	SPRING, TENSION
333	3-715-610-01	s	KNOB, PS
334	3-722-699-01	o	KNOB
335	3-722-988-01	o	SCREW, PANEL
336	3-735-979-01	o	COVER, UPPER
337	3-737-107-01	o	SCREW, STAY SUPPORT
338	3-737-110-01	o	GUIDE (RIGHT), CASSETTE
339	3-737-111-01	o	GUIDE (LEFT), CASSETTE
340	3-737-135-01	o	SPRING
341	3-737-136-01	o	SHAFT, DISK
342	3-737-137-01	s	GEAR, MIDWAY
343	3-739-750-01	o	COLLAR, STAY SUPPORT SCREW
344	3-739-758-01	o	SPACER, SCREW, STAY SUPPORT
345	3-849-739-00	s	SPRING (A)
346	4-334-513-00	s	NUT, NYLON
347	4-601-466-21	s	COVER, 3P INLET
348	4-915-008-01	s	COLLAR, LOCK HANDLE
349	7-624-105-04	s	STOP RING 2.3, TYPE -E
350	7-624-108-04	s	STOP RING 4.0, TYPE -E
351	7-688-003-02	s	W 3, SMALL
352	7-688-004-12	s	W 4, MIDDLE
353	9-910-999-31	s	SPRING, COMPRESSION
354	3-701-822-01	o	HOLDER, WIRE
355	4-603-253-31	o	PLATE, INDICATION FD
356	A-8260-421-A	s	COVER ASSY
357	3-701-748-00	s	CLAMP

FRONT BLOCK

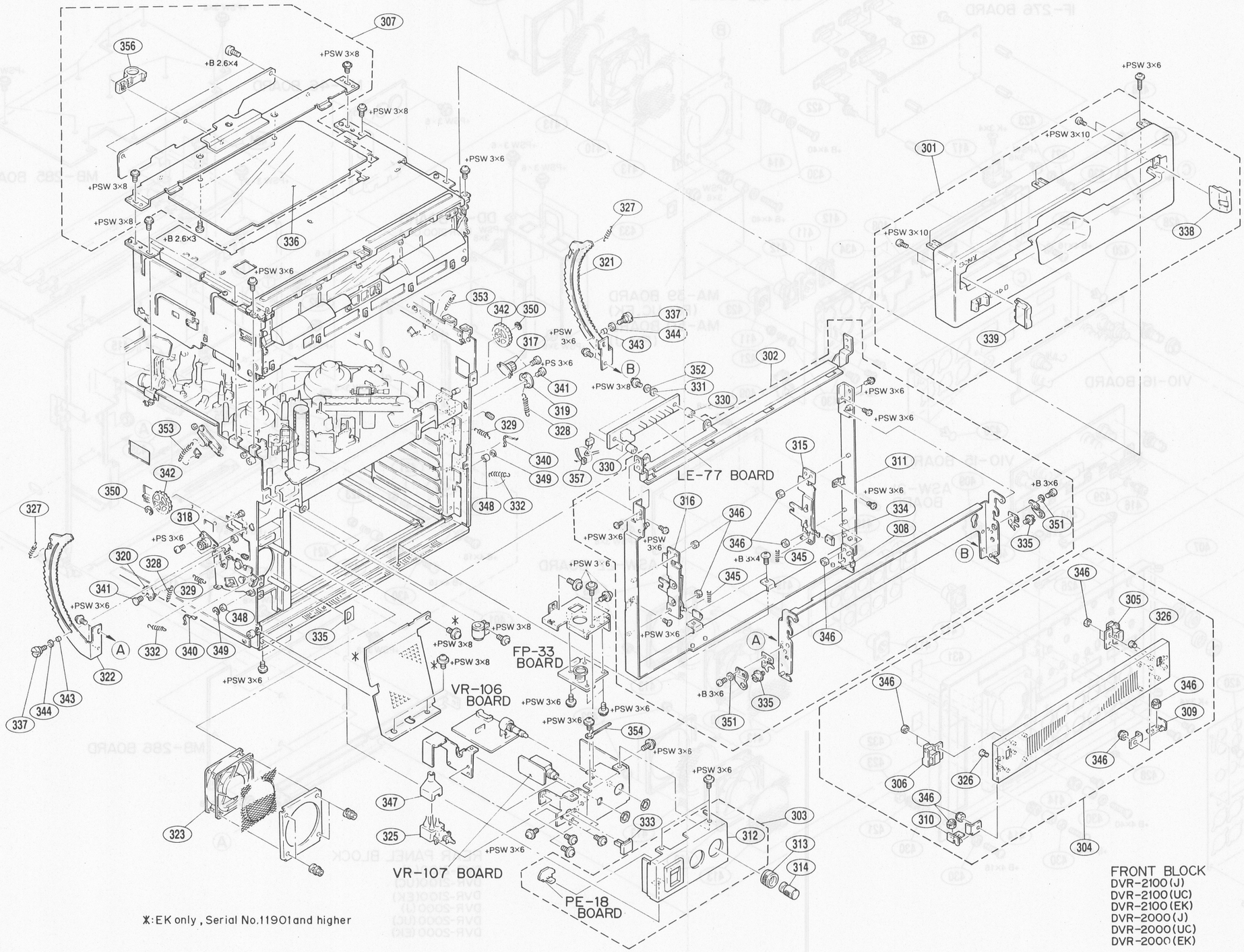

✱:EK only, Serial No.11901and higher

FRONT BLOCK
DVR-2100(J)
DVR-2100(UC)
DVR-2100(EK)
DVR-2000(J)
DVR-2000(UC)
DVR-2000(EK)

22-11

REAR PANEL BLOCK

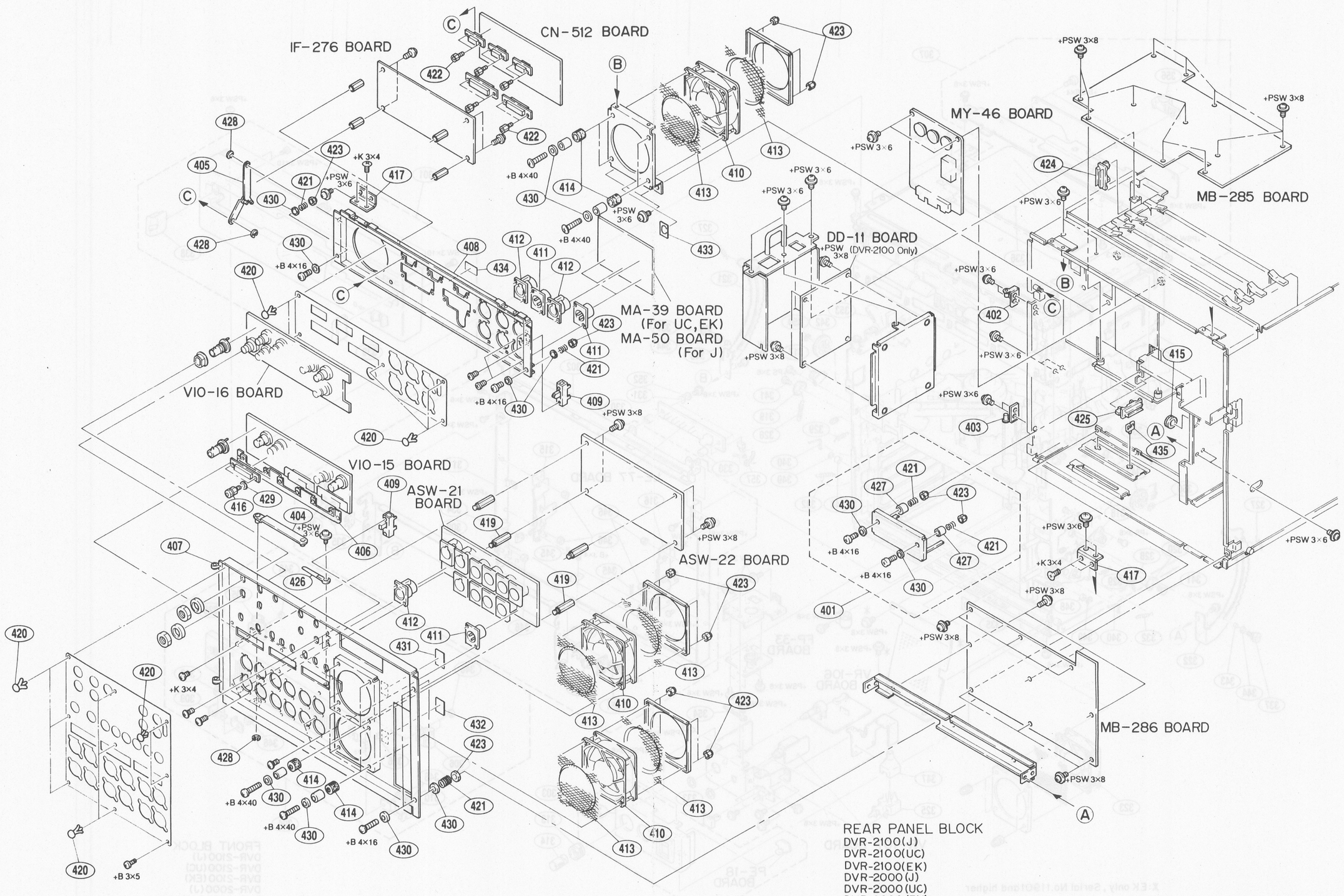

REAR PANEL BLOCK
DVR-2100(J)
DVR-2100(UC)
DVR-2100(EK)
DVR-2000(J)
DVR-2000(UC)
DVR-2000(EK)

REAR PANEL BLOCK, DVR-2000/2100

No.	Part No.	SP	Description
401	A-6003-051-A	o	PANEL ASSY, OP BLANK
402	X-3165-903-1	o	SUPPORT ASSY (1), PANEL
403	X-3165-904-1	o	SUPPORT ASSY (2), PANEL
404	X-3165-905-1	o	LINK (1) ASSY, SWITCHING
405	X-3165-906-1	o	LINK (2) ASSY, SWITCHING
406	X-3165-917-1	o	NUT ASSY, PLATE, D-SUB
407	X-3165-931-4	o	PANEL (1) ASSY, CONNECTOR
408	X-3165-932-2	o	PANEL (2) ASSY, CONNECTOR
409	1-514-524-00	s	SLIDE SWITCH
410	1-541-890-11	s	MOTOR, DC FAN (WITH FG)
411	1-565-281-11	o	CONNECTOR, XLR TYPE 3P
412	1-565-282-11	o	CONNECTOR, XLR TYPE 3P
413	2-252-609-11	o	COVER, FAN
414	2-390-741-00	o	BUSHING, RUBBER
415	3-000-907-06	o	BUSHING, RUBBER
416	3-170-577-02	o	SCREW (UNC), D-SUB
417	3-170-614-01	o	HINGE, CONNECTOR PANEL (2)
419	3-172-598-01	o	SUPPORT (S), PC BOARD
420	3-531-576-01	s	RIVET
421	3-576-921-00	s	SPRING, COMPRESSION
422	3-673-910-21	o	SCREW, CONNECTOR
423	3-680-316-00	s	NUT (M4), STOPPER
424	3-680-613-01	o	SUPPORT, PC BOARD
425	3-680-613-11	o	SUPPORT, PC BOARD
426	3-701-822-01	o	HOLDER, WIRE
427	3-714-855-11	o	SPACER, REAR PANEL
428	7-624-106-04	s	STOP RING 3.0, TYPE -E
429	7-688-002-03	s	W 2.6, SMALL
430	7-688-004-12	s	W 4, MIDDLE
431	4-603-253-01	o	PLATE, INDICATION FD
432	4-603-253-11	o	PLATE, INDICATION FD
433	4-603-253-21	o	PLATE, INDICATION FD
434	3-185-786-01	o	PLATE, PROTECTION, HARNESS
435	4-314-320-00	o	HOLDER, WIRE

POWER SUPPLY BLOCK, DVR-2000/2100

No.	Part No.	SP	Description
501	A-6038-047-A	o	POWER ASSY
	A-8313-073-A	o	POWER ASSY (for EK, Serial No.11901 and higher)
502	X-4854-207-0	s	TERMINAL ASSY, GROUND
503	⚠ 1-424-532-12	s	FILTER, NOISE (AC INLET TYPE)
504	⚠ 1-572-899-11	s	SWITCH, SEESAW (AC POWER)
505	2-990-241-02	s	HOLDER (A), PLUG
506	3-170-555-01	s	SHEET, PS RADIATION
507	3-660-978-11	o	SHEET, HEAT RESISTING
508	3-715-526-01	o	WASHER (M3)
509	3-715-528-11	s	SHEET (F), RADIATION
510	3-722-745-01	o	COVER
511	3-735-939-01	o	SHEET (B-1), RADIATION, PS
512	3-735-940-01	o	SHEET (B-2), RADIATION, PS
513	3-735-942-01	o	SHEET (C-2), RADIATION, PS
514	3-735-944-01	o	SHEET (B-3), RADIATION, PS
515	3-737-182-01	o	COVER, FUSE
516	4-607-492-01	o	HEAT SINK (M)
517	4-870-221-00	o	SHAFT, FITTING, POWER SWITCH
518	4-873-829-02	o	HEAT SINK
519	4-877-620-00	s	SUPPORT (P)
520	⚠ 9-910-999-33	s	BREAKER, CIRCUIT (for UC)
	⚠ 1-533-570-11	s	BREAKER, CIRCUIT (for EK, Serial No. 11901and higher)
521	A-8313-074-A	o	PS-256 COMPL
522	A-6023-075-A	o	CT-133 COMPL-NC
523	A-6023-054-B	o	RE-52 COMPL-NC

POWER SUPPLY BLOCK

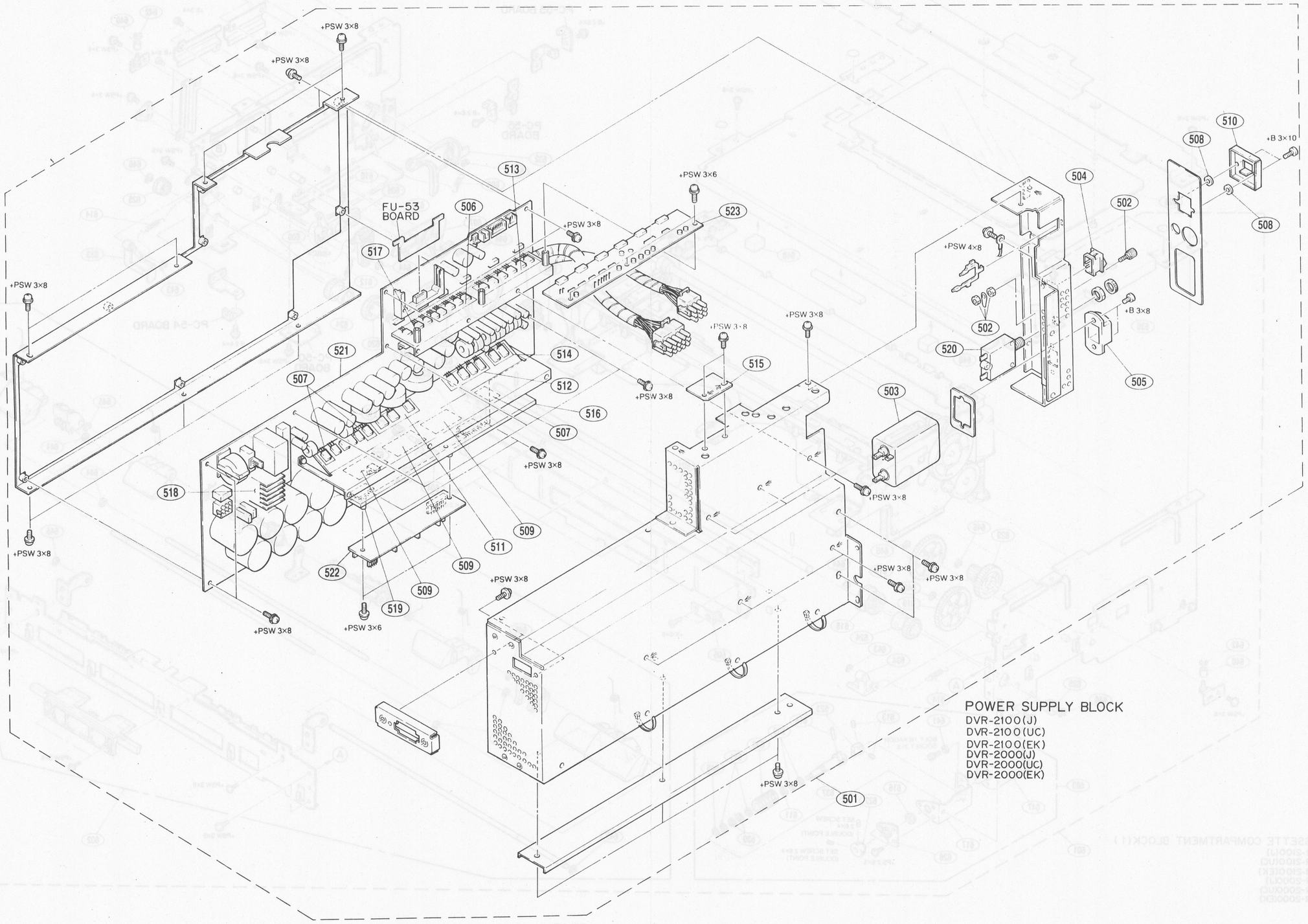

22-15

 CASSETTE COMPARTMENT BLOCK (1)

SSETTE COMPARTMENT BLOCK (1)

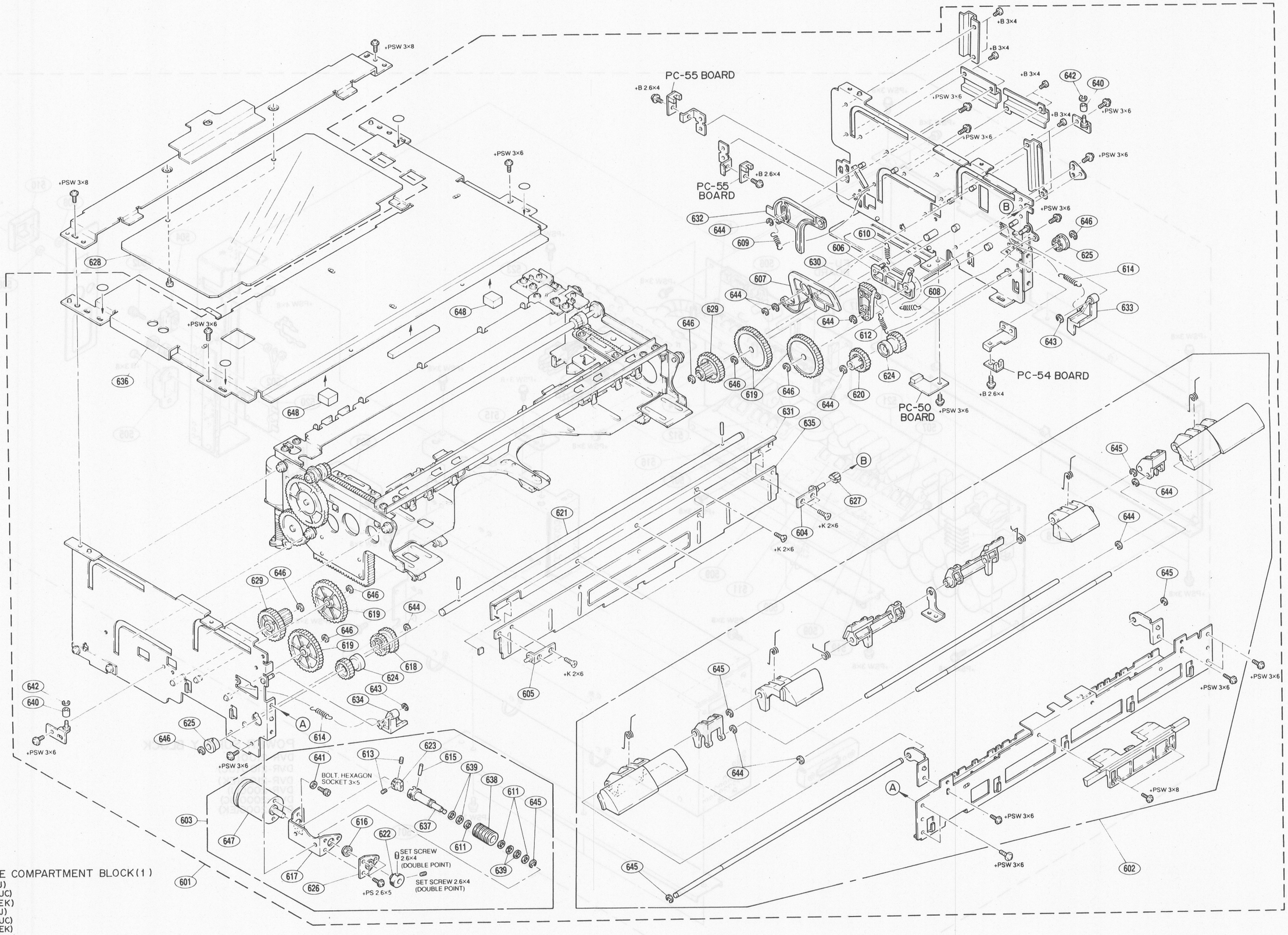

CASSETTE COMPARTMENT BLOCK(1)
DVR-2100(J)
DVR-2100(UC)
DVR-2100(EK)
DVR-2000(J)
DVR-2000(UC)
DVR-2000(EK)

CASSETTE COMPARTMENT BLOCK(1), DVR-2000/2100

No.	Part No.	SP	Description
601	A-6028-013-C	s	CASSETTE COMPARTMENT ASSY
602	A-6028-014-A	o	PLATE ASSY, FRONT
603	A-6037-038-B	s	MOTOR ASSY, OUTER
604	X-3735-803-1	o	PLATE (RIGHT) ASSY, SHAFT
605	X-3735-804-1	o	PLATE (LEFT) ASSY, SHAFT
606	X-3735-881-1	o	LEVER ASSY, LID OPEN
607	X-3735-882-1	o	CAM ASSY, LID OPEN
608	3-489-325-01	s	SPRING, TENSION
609	3-530-248-XX	o	SPRING, TENSION
610	3-531-866-01	s	SPRING, TENSION
611	3-662-048-00	s	WASHER, BRACKET
612	3-672-461-00	s	SPRING, TENSION
613	3-701-505-00	s	SET SCREW, DOUBLE POINT 3X3
614	3-701-788-XX	s	SPRING, TENSION
615	3-703-358-03	s	PIN, PARALLEL (DIA. 2X8)
616	3-722-752-01	s	BEARING (FLANGED), BALL
617	3-735-875-01	o	BRACKET (A), MOTOR
618	3-735-883-01	o	GEAR (A-A)
619	3-735-886-01	o	GEAR (C)
620	3-735-887-01	o	GEAR (A-B)
621	3-735-892-01	o	SHAFT (A), DRIVING
622	3-735-893-02	o	WHEEL, DRIVING
623	3-735-895-01	o	JOINT (1), WORM
624	3-735-918-01	o	GEAR (B)
625	3-735-928-01	o	BEARING (A)
626	3-735-931-01	o	RETAINER, BEARING
627	3-735-932-01	o	GEAR, LID
628	3-735-979-01	o	COVER, UPPER
629	3-735-986-01	o	GEAR (D)
630	3-737-235-01	o	GEAR, LID SWITCHING
631	3-737-236-02	o	REINFORCEMENT, LID
632	3-737-237-01	o	SHUTTER
633	3-737-240-01	o	SHUTTER (RIGHT), UP
634	3-737-241-01	o	SHUTTER (LEFT), UP
635	3-737-325-04	s	LID, CASSETTE COMPARTMENT
636	3-737-333-01	o	PLATE, TOP
637	3-737-364-02	o	SHAFT, WORM
638	3-737-365-02	o	GEAR, WORM
639	3-737-366-01	s	SPRING, LEAF
640	3-739-716-01	o	ROLLER, G
641	7-623-208-22	s	SW 3,TYPE 2
642	7-624-102-04	s	STOP RING 1.5, TYPE -E
643	7-624-105-04	s	STOP RING 2.3, TYPE -E
644	7-624-106-04	s	STOP RING 3.0, TYPE -E
645	7-624-108-04	s	STOP RING 4.0, TYPE -E
646	7-624-109-04	s	STOP RING 5.0, TYPE -E
647	8-835-047-01	s	MOTOR, DC (MNR-4000A)
648	9-911-815-03	o	CUSHION, LID

CASSETTE COMPARTMENT BLOCK(2), DVR-2000/2100

No.	Part No.	SP	Description
701	A-6037-037-B	s	MOTOR ASSY, INNER
702	X-3735-805-5	o	BRACKET (B) ASSY, MOTOR
703	X-3735-906-1	o	CAM (1) ASSY, PUSH-OUT
704	X-3735-907-1	o	CAM (2) ASSY, PUSH-OUT
705	1-574-872-11	s	WIRE, FLEXIBLE CARD 4P
706	1-574-873-11	s	WIRE, FLEXIBLE CARD 10P
707	2-245-253-00	s	SPRING
708	2-249-361-00	s	PIN, PARALLEL
709	3-638-493-00	s	RING, RETAINING, CE
710	3-662-048-00	s	WASHER, BRACKET
711	3-669-481-06	s	PIN (DIA.1X6), PARALLEL
712	3-701-505-00	s	SET SCREW, DOUBLE POINT 3X3
713	3-703-358-03	s	PIN, PARALLEL (DIA. 2X8)
714	3-722-752-01	s	BEARING (FLANGED), BALL
715	3-722-776-01	o	BEARING
716	3-735-882-01	o	CAM, CASSETTE PUSH-OUT
717	3-735-884-01	o	GEAR (3)
718	3-735-891-01	o	GEAR (2)
719	3-735-893-02	o	WHEEL, DRIVING
720	3-735-894-01	o	GEAR (1)
721	3-735-895-01	o	JOINT (1), WORM
722	3-735-897-01	o	STOPPER BLOCK
723	3-735-901-01	o	GEAR (5)
724	3-735-906-01	s	SPRING
725	3-735-915-01	o	BEARING (B)
726	3-735-917-01	o	GEAR (4)
727	3-735-919-02	o	ROLLER, PUSH-OUT
728	3-735-922-01	o	ROLLER, STOPPER
729	3-735-923-01	o	RACK (2) (LEFT)
730	3-735-924-02	o	SHUTTER, C DETECTION
731	3-735-931-01	o	RETAINER, BEARING
732	3-735-983-01	s	SPRING
733	3-735-983-11	s	SPRING, CAM RETERN
734	3-735-984-01	o	ROLLER (A), GUIDE
735	3-735-985-01	o	ROLLER (B), GUIDE
736	3-735-987-03	o	RACK (2) (RIGHT)
737	3-737-242-01	o	RACK (1) (RIGHT)
738	3-737-243-01	o	RACK (1) (LEFT)
739	3-737-364-02	o	SHAFT, WORM
740	3-737-365-02	o	GEAR, WORM
741	3-737-366-01	s	SPRING, LEAF
742	3-739-763-01	s	SPRING, TENSION
743	4-555-003-00	s	SPRING
744	4-879-763-00	s	SPRING, COMPRESSION
745	7-623-208-22	s	SW 3,TYPE 2
746	7-624-102-04	s	STOP RING 1.5, TYPE -E
747	7-624-105-04	s	STOP RING 2.3, TYPE -E
748	7-624-106-04	s	STOP RING 3.0, TYPE -E
749	7-624-108-04	s	STOP RING 4.0, TYPE -E
750	7-624-109-04	s	STOP RING 5.0, TYPE -E
751	7-688-002-03	s	W 2.6, MIDDLE
752	8-835-123-01	s	MOTOR, DC (MNR-7400A)

 CASSETTE COMPARTMENT BLOCK (2)

CASSETTE COMPARTMENT BLOCK (2)

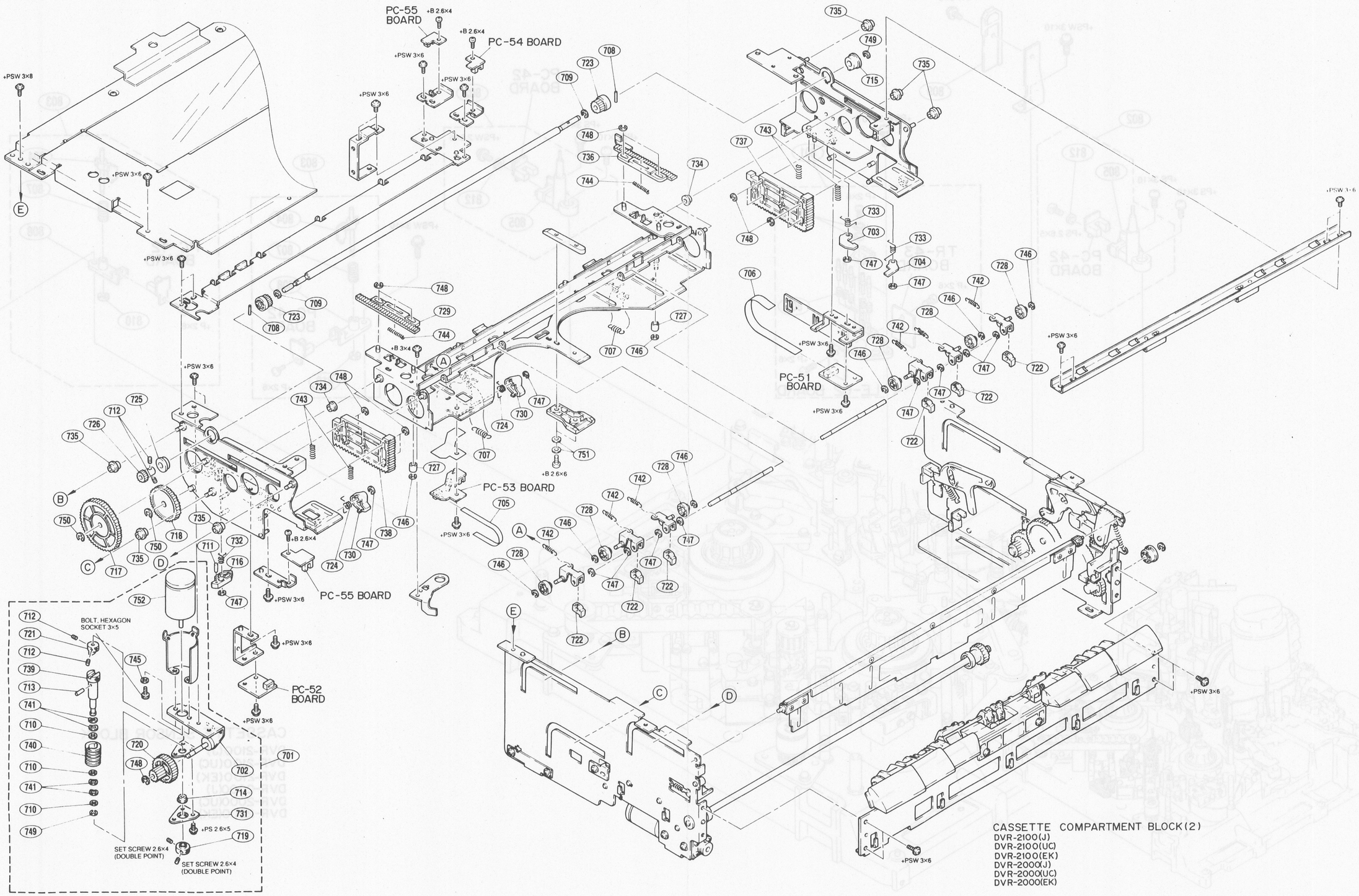

22-19

CASSETTE SENSOR BLOCK

CASSETTE SENSOR BLOCK

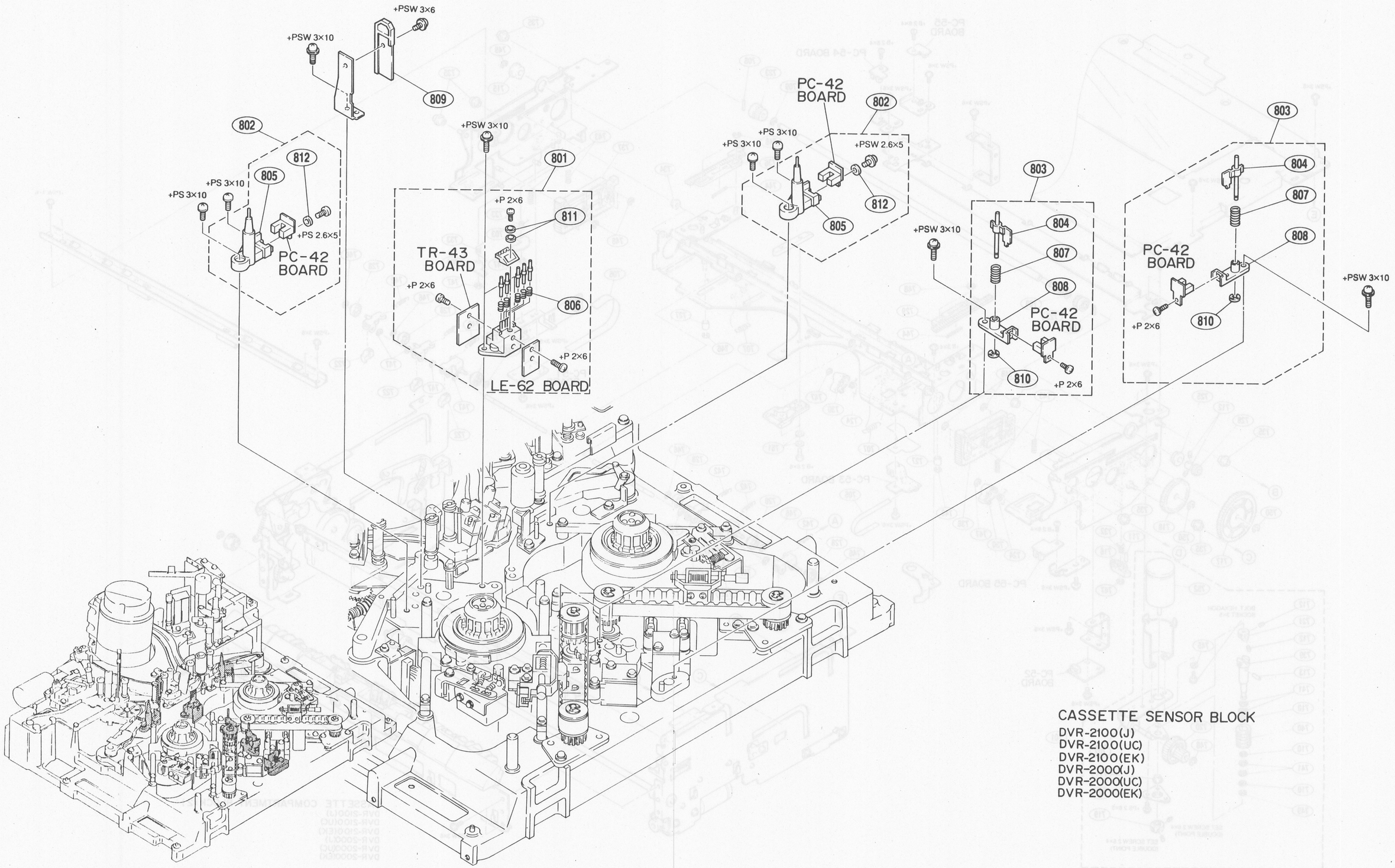

CASSETTE SENSOR BLOCK
DVR-2100(J)
DVR-2100(UC)
DVR-2100(EK)
DVR-2000(J)
DVR-2000(UC)
DVR-2000(EK)

22-20

CASSETTE SENSOR BLOCK, DVR-2000/2100

No.	Part No.	SP	Description
801	A-6029-064-D	s	CD BLOCK ASSY
802	A-6029-065-A	o	PIN ASSY, STANDARD
803	A-6029-066-A	o	PIN ASSY, UB
804	X-3715-307-1	o	FLAG ASSY, UB
805	X-3715-400-2	o	PIN ASSY, STANDARD
806	3-554-017-00	s	SPRING, COMPRESSION
807	3-642-629-00	s	SPRING, COMPRESSION
808	3-715-371-03	o	HOLDER, UB
809	3-722-610-02	s	COVER, C
810	7-624-102-04	s	STOP RING 1.5, TYPE -E
811	7-688-001-12	s	W 2, MIDDLE
812	7-688-002-03	s	W 2.6, SMALL

S REEL TABLE BLOCK, DVR-2000/2100

No.	Part No.	SP	Description
901	A-6029-094-E	s	TABLE ASSY, REEL
902	A-6029-095-D	s	BRAKE (S) ASSY
903*	A-6029-115-A	s	STOPPER ASSY, M
903**	A-8267-647-A	s	STOPPER ASSY, M
904	X-3735-819-3	o	SHAFT ASSY (S), LIMITER
905	X-3735-821-3	o	ARM (S) ASSY, BRAKE
906	X-3735-822-3	s	SHOE (S) ASSY, BRAKE
907	X-3735-853-2	o	FRAME (S) ASSY, MOTOR
908	1-454-487-12	s	SOLENOID, PLUNGER
909	1-454-489-12	s	SOLENOID, PLUNGER
910	1-590-998-11	s	WIRE, FLEXIBLE CARD (32P)
911	3-307-378-00	s	SPRING, TENSION
912	3-701-439-01	s	WASHER
913	3-701-439-11	s	WASHER
914	3-701-441-11	s	WASHER
915	3-701-511-00	s	SET SCREW, DOUBLE POINT 4X6
916	3-715-340-01	o	SPRING
917	3-715-341-03	o	CLAW, REEL TABLE
918	3-675-713-01	s	SPACER (ST)
919	3-675-713-11	s	SPACER (ST)
920	3-675-713-21	s	SPACER (ST)
921	3-675-713-31	s	SPACER (ST)
922	3-722-635-01	o	SHAFT, CASSETTE HEIGHT
923	3-724-831-01	s	SCREW (M3X4)
924*	3-735-858-01	s	SPRING, COMPRESSION
925*	3-735-859-01	o	COVER, SPRING
926*	3-735-954-01	o	JOINT, PIN
927*	3-735-955-02	o	PIN (M), STOPPER
928	3-182-168-01	s	SHAFT, GUIDE
929	3-182-168-11	s	SHAFT, GUIDE
930	3-735-961-01	o	BELT, TIMING
931	3-735-963-04	o	CATCHER, STOPPER
932	3-735-970-01	o	COLLAR, LIMITER
933	3-737-209-01	s	SPRING, TENSION
934	3-737-210-01	o	PIN, FIXED
935	3-737-279-01	o	HOLDER (B), BELT
936	3-737-363-02	s	SPRING, COMPRESSION
937	3-737-384-01	s	SPRING, TENSION
938	7-623-208-22	s	SW 3,TYPE 2
939	7-624-104-04	s	STOP RING 2.0, TYPE -E
940	7-624-105-04	s	STOP RING 2.3, TYPE -E
941	7-624-106-04	s	STOP RING 3.0, TYPE -E
942	7-624-108-04	s	STOP RING 4.0, TYPE -E
943	7-624-197-11	s	STOP RING 14, TYPE-C
944	7-688-003-01	s	W 3, SMALL
945	8-835-446-01	s	MOTOR, DC U-6C
946	3-675-713-41	s	SPACER (ST)
947	3-675-713-51	s	SPACER (ST)
948	3-675-713-61	s	SPACER (ST)
949	3-675-713-71	s	SPACER (ST)
950	3-675-713-81	s	SPACER (ST)
951	3-675-713-91	s	SPACER (ST)

S REEL TABLE BLOCK

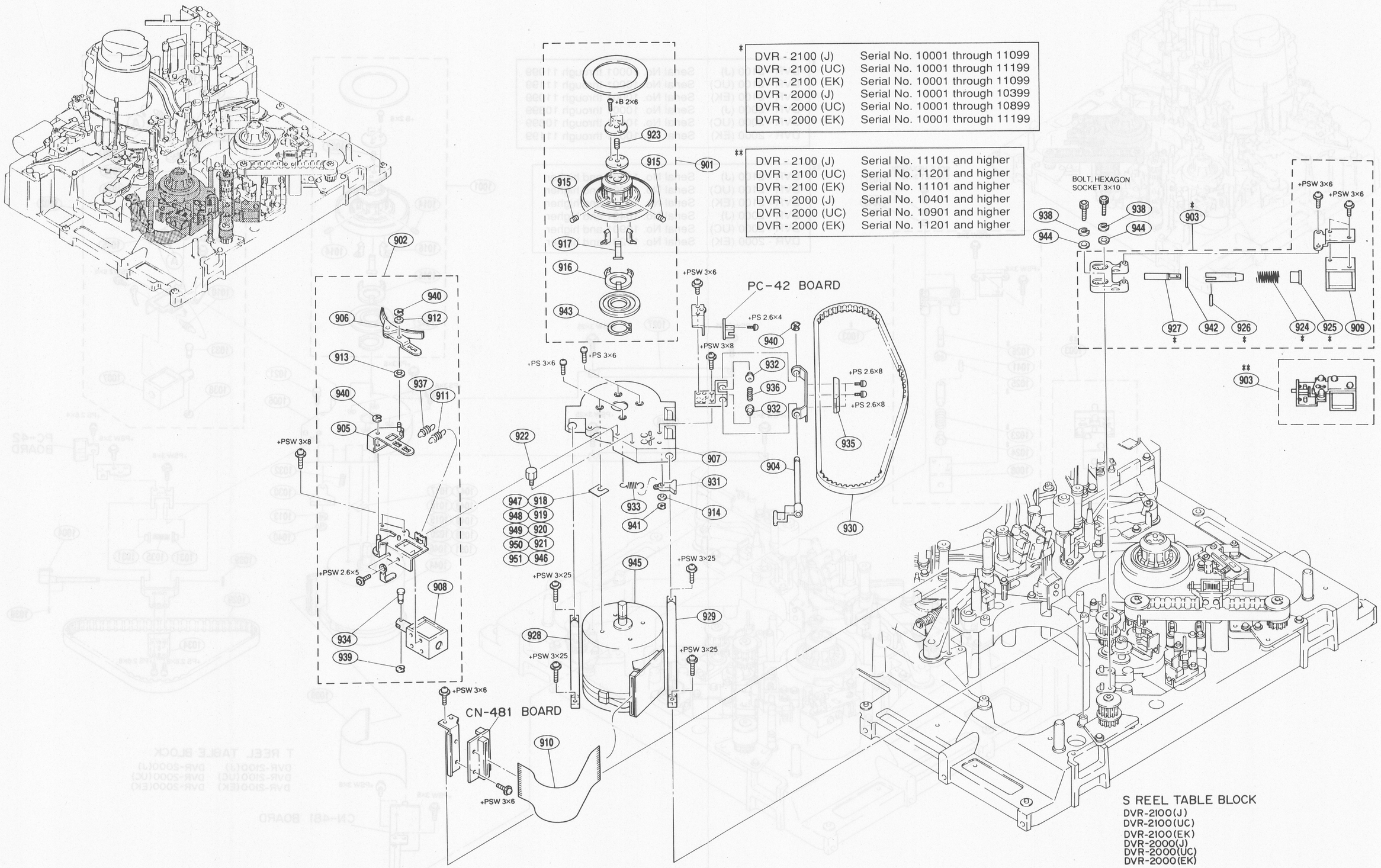

*	DVR - 2100 (J)	Serial No. 10001 through 11099
	DVR - 2100 (UC)	Serial No. 10001 through 11199
	DVR - 2100 (EK)	Serial No. 10001 through 11099
	DVR - 2000 (J)	Serial No. 10001 through 10399
	DVR - 2000 (UC)	Serial No. 10001 through 10899
	DVR - 2000 (EK)	Serial No. 10001 through 11199

**	DVR - 2100 (J)	Serial No. 11101 and higher
	DVR - 2100 (UC)	Serial No. 11201 and higher
	DVR - 2100 (EK)	Serial No. 11101 and higher
	DVR - 2000 (J)	Serial No. 10401 and higher
	DVR - 2000 (UC)	Serial No. 10901 and higher
	DVR - 2000 (EK)	Serial No. 11201 and higher

T REEL TABLE BLOCK

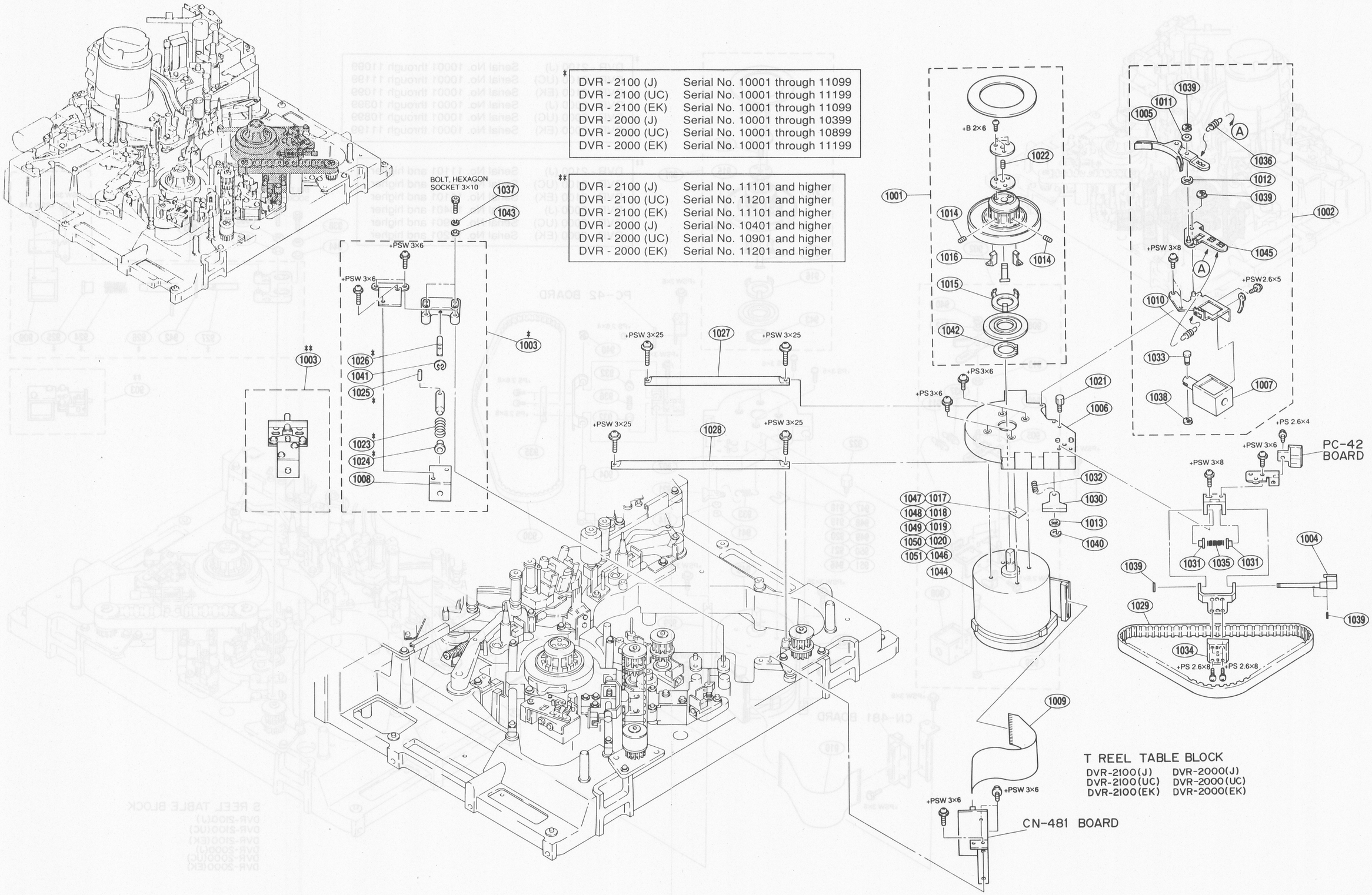

*

DVR - 2100 (J)	Serial No. 10001 through 11099
DVR - 2100 (UC)	Serial No. 10001 through 11199
DVR - 2100 (EK)	Serial No. 10001 through 11099
DVR - 2000 (J)	Serial No. 10001 through 10399
DVR - 2000 (UC)	Serial No. 10001 through 10899
DVR - 2000 (EK)	Serial No. 10001 through 11199

**

DVR - 2100 (J)	Serial No. 11101 and higher
DVR - 2100 (UC)	Serial No. 11201 and higher
DVR - 2100 (EK)	Serial No. 11101 and higher
DVR - 2000 (J)	Serial No. 10401 and higher
DVR - 2000 (UC)	Serial No. 10901 and higher
DVR - 2000 (EK)	Serial No. 11201 and higher

22-24

T REEL TABLE BLOCK, DVR-2000/2100

No.	Part No.	SP	Description
1001	A-6029-094-E	s	TABLE ASSY, REEL
1002	A-6029-098-D	s	BRAKE (T) ASSY
1003*	A-6029-115-A	s	STOPPER ASSY, M
1003**	A-8267-647-A	s	STOPPER ASSY, M
1004	X-3735-820-3	o	SHAFT ASSY (T), LIMITER
1005	X-3735-826-3	s	SHOE (T) ASSY, BRAKE
1006	X-3735-854-2	o	FRAME (T) ASSY, MOTOR
1007	1-454-487-12	s	SOLENOID, PLUNGER
1008	1-454-489-12	s	SOLENOID, PLUNGER
1009	1-590-998-11	s	WIRE, FLEXIBLE CARD (32P)
1010	3-307-378-00	s	SPRING, TENSION
1011	3-701-439-01	s	WASHER
1012	3-701-439-11	s	WASHER
1013	3-701-441-11	s	WASHER
1014	3-701-511-00	s	SET SCREW, DOUBLE POINT 4X6
1015	3-715-340-01	o	SPRING
1016	3-715-341-03	o	CLAW, REEL TABLE
1017	3-675-713-01	s	SPACER (ST)
1018	3-675-713-11	s	SPACER (ST)
1019	3-675-713-21	s	SPACER (ST)
1020	3-675-713-31	s	SPACER (ST)
1021	3-722-635-01	o	SHAFT, CASSETTE HEIGHT
1022	3-724-831-01	s	SCREW (M3X4)
1023*	3-735-858-01	s	SPRING, COMPRESSION
1024*	3-735-859-01	o	COVER, SPRING
1025*	3-735-954-01	o	JOINT, PIN
1026*	3-735-955-02	o	PIN (M), STOPPER
1027	3-182-168-01	s	SHAFT, GUIDE
1028	3-182-168-11	s	SHAFT, GUIDE
1029	3-735-961-01	o	BELT, TIMING
1030	3-735-963-04	o	CATCHER, STOPPER
1031	3-735-970-01	o	COLLAR, LIMITER
1032	3-737-209-01	s	SPRING, TENSION
1033	3-737-210-01	o	PIN, FIXED
1034	3-737-279-01	o	HOLDER (B), BELT
1035	3-737-363-02	s	SPRING, COMPRESSION
1036	3-737-384-01	s	SPRING, TENSION
1037	7-623-208-22	s	SW 3,TYPE 2
1038	7-624-104-04	s	STOP RING 2.0, TYPE -E
1039	7-624-105-04	s	STOP RING 2.3, TYPE -E
1040	7-624-106-04	s	STOP RING 3.0, TYPE -E
1041	7-624-108-04	s	STOP RING 4.0, TYPE -E
1042	7-624-197-11	s	STOP RING 14, TYPE-C
1043	7-688-003-01	s	W 3, SMALL
1044	8-835-446-01	s	MOTOR, DC U-6C
1045	X-3735-825-2	o	ARM(T) ASSY, BRAKE
1046	3-675-713-41	s	SPACER (ST)
1047	3-675-713-51	s	SPACER (ST)
1048	3-675-713-61	s	SPACER (ST)
1049	3-675-713-71	s	SPACER (ST)
1050	3-675-713-81	s	SPACER (ST)
1051	3-675-713-91	s	SPACER (ST)

REEL TABLE DRIVING BLOCK, DVR-2000/2100

No.	Part No.	SP	Description
1101	A-6029-114-A	s	MOTOR ASSY, SHIFT
1102	A-6029-117-A	o	PULLEY ASSY, SUB
1103	X-3735-843-1	o	PLATE ASSY, PULLEY
1104	X-3735-883-1	o	SHAFT (1) ASSY, WORM
1105	1-237-578-11	s	POTENTIOMETER 5K
1106	2-249-361-00	o	PIN, PARALLEL
1107*	3-572-513-00	o	SPRING, COMPRESSION
1108	3-618-280-00	o	SPACER, LEVER, REC
1109	3-662-048-00	s	WASHER, BRACKET
1110	3-701-439-11	s	WASHER
1111	3-701-443-21	s	WASHER, 5 DIA.
1112	3-701-506-01	s	SET SCREW, DOUBLE POINT 3X4
1113	3-735-856-01	s	BEARING (FLANGE), BALL
1114	3-735-956-01	o	PULLEY
1115	3-735-957-01	o	WHEEL, WORM
1116	3-735-958-01	o	WORM
1117	3-735-962-01	o	GEAR, PM
1118*	3-735-969-01	o	SHAFT (RS), WHEEL
1119	3-735-971-01	o	FLANGE, PULLEY
1120	3-737-206-01	s	BEARING (FLANGE), BALL
1121	3-739-724-01	o	JOINT (1), WORM
1122	7-623-208-22	s	SW 3, TYPE 2
1123	7-624-108-04	s	STOP RING 4.0, TYPE -E
1124	7-688-003-11	s	W 3, MIDDLE
1125	7-688-005-01	s	W 5, SMALL
1126	8-835-047-01	s	MOTOR, DC (MNR-4000A)
1127**	3-182-167-01	o	SHAFT(R) WHEEL
1128*	3-703-358-03	s	PIN, PARALLEL(DIA.2x8)
1128**	7-626-314-11	s	PIN, SPRING(2x8)

REEL TABLE DRIVING BLOCK

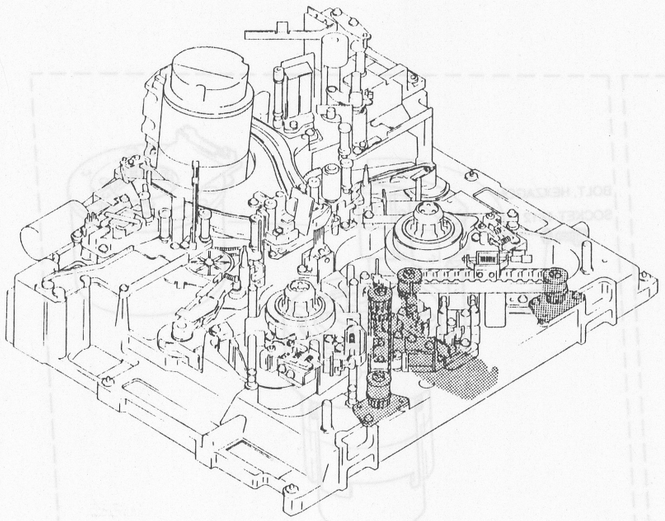

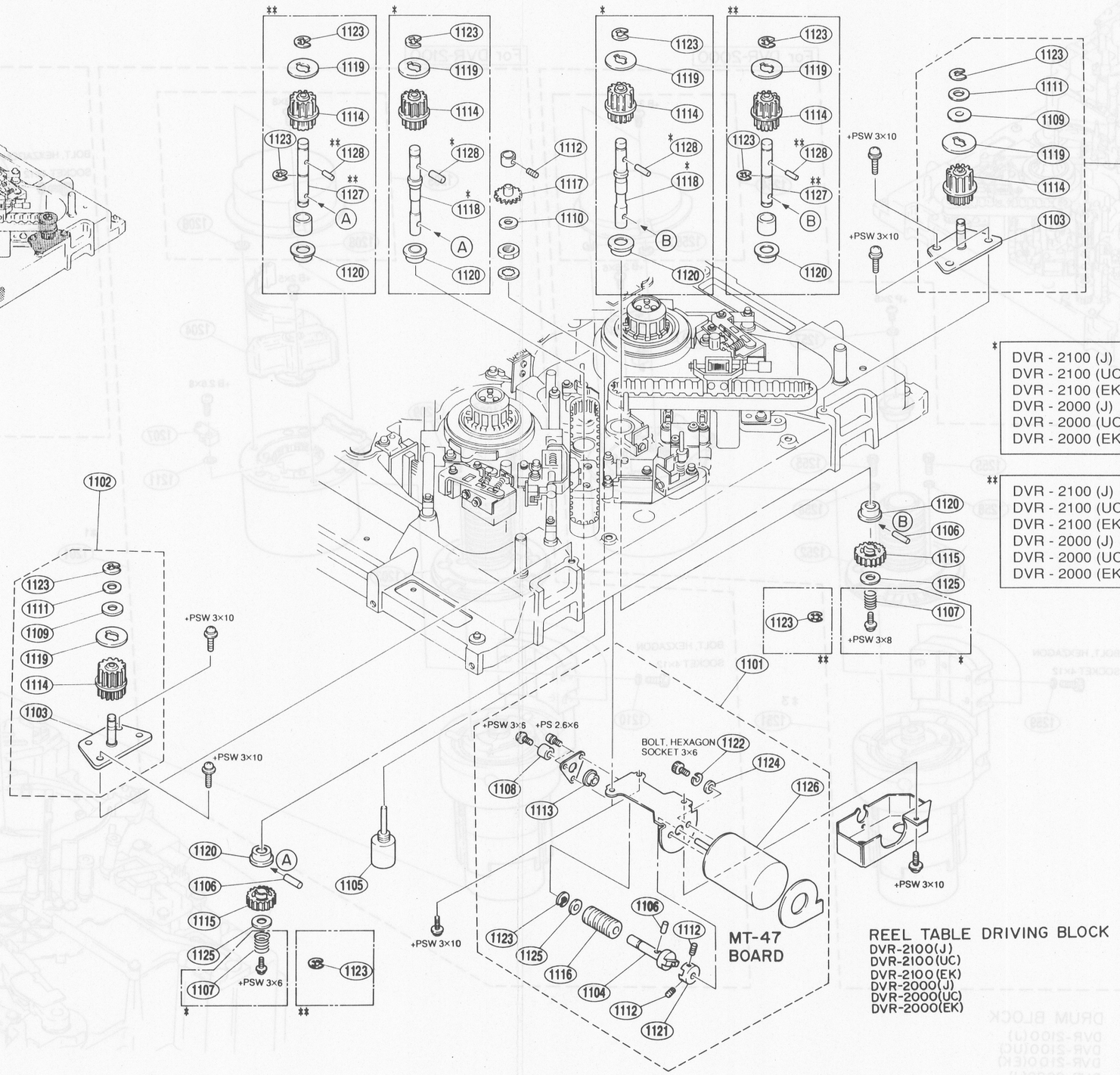

DVR - 2100 (J)	Serial No. 10001 through 11099
DVR - 2100 (UC)	Serial No. 10001 through 11199
DVR - 2100 (EK)	Serial No. 10001 through 11099
DVR - 2000 (J)	Serial No. 10001 through 10399
DVR - 2000 (UC)	Serial No. 10001 through 10899
DVR - 2000 (EK)	Serial No. 10001 through 11199

DVR - 2100 (J)	Serial No. 11101 and higher
DVR - 2100 (UC)	Serial No. 11201 and higher
DVR - 2100 (EK)	Serial No. 11101 and higher
DVR - 2000 (J)	Serial No. 10401 and higher
DVR - 2000 (UC)	Serial No. 10901 and higher
DVR - 2000 (EK)	Serial No. 11201 and higher

REEL TABLE DRIVING BLOCK
DVR-2100(J)
DVR-2100(UC)
DVR-2100(EK)
DVR-2000(J)
DVR-2000(UC)
DVR-2000(EK)

22-27

DRUM BLOCK

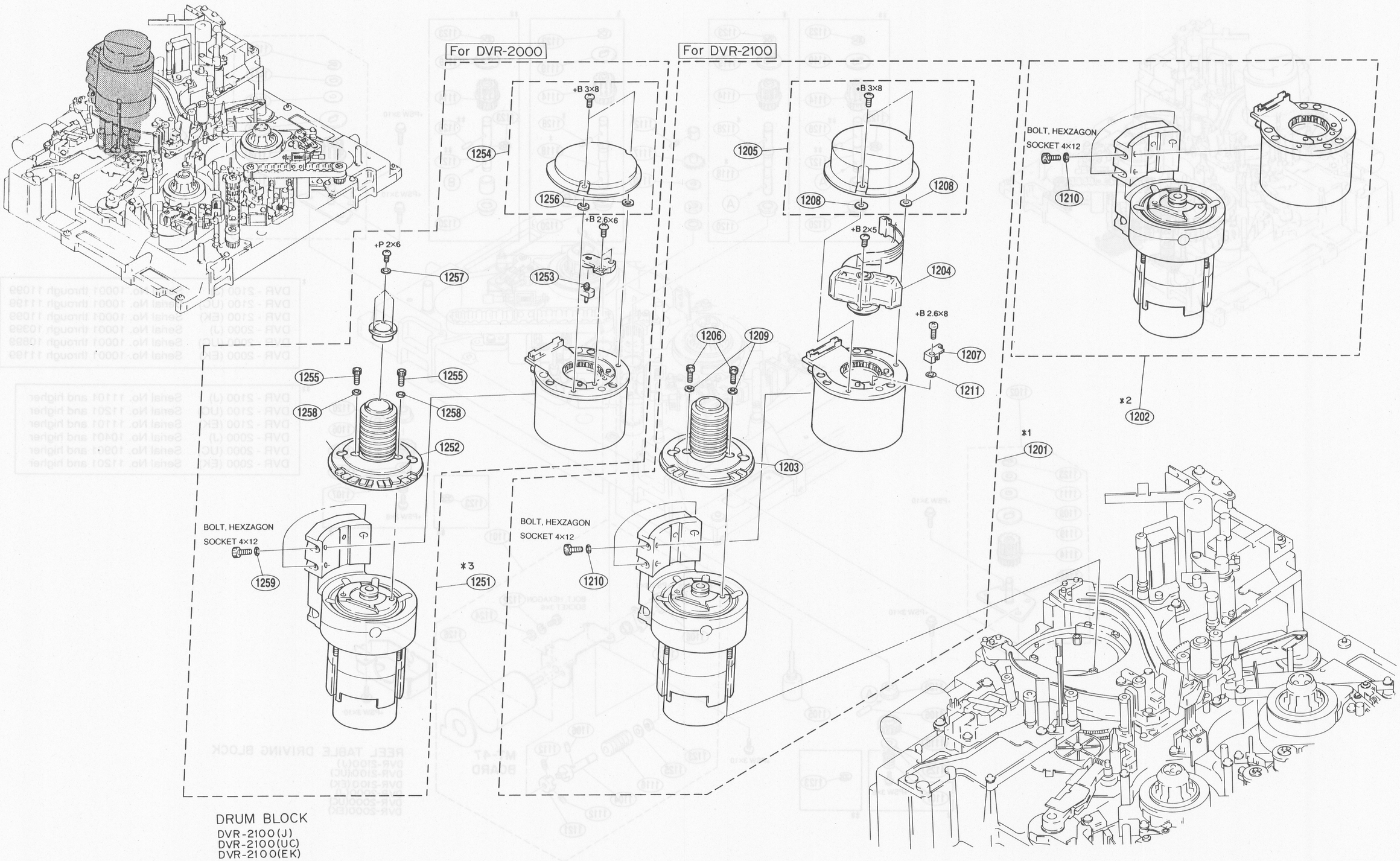

DRUM BLOCK
DVR-2100(J)
DVR-2100(UC)
DVR-2100(EK)
DVR-2000(J)
DVR-2000(UC)
DVR-2000(EK)

22-28

DRUM BLOCK, DVR-2100

No.	Part No.	SP	Description
*1 1201	A-6050-856-B	s	DRUM ASSY (DDH-02A-R)
*2 1202	A-6050-858-A	s	DRUM ASSY (DDL-02A-R)
1203	A-6050-857-B	s	SCANNER ASSY (DDR-02-R)
1204	A-6050-859-A	s	RING ASSY (RP), BRUSH SLIP
1205	X-3165-878-2	s	COVER ASSY, DRUM
1206	2-623-773-21	s	BOLT (M3x10), STAINRESS
1207	3-174-889-01	o	PLATE, FIXED SR
1208	3-669-596-01	s	WASHAER (2.3), STOPPER
1209	7-688-003-11	s	W3, MIDDLE
1210	7-688-004-01	s	W4, SMALL
1211	3-669-595-00	s	WASHER (2),STOPPER

DRUM BLOCK, DVR-2000

NO.	Part No.	SP	Descliption
*2 1202	A-6050-858-A	s	DRUM ASSY (DDL-02A-R)
*3 1251	A-6050-864-B	s	DRUM ASSY (DDH-03A-R)
1252	A-6050-865-B	s	SCANNER ASSY (DDR-03-R)
1253	A-6050-465-A	s	BUSHING ASSY, SHAFT GROUND
1254	X-3166-176-1	s	COVER ASSY, (03A) DRUM
1255	2-623-773-21	s	BOLT (M3x10), STAINRESS
1256	3-669-596-01	s	WASHAR (2.3), STOPPER
1257	7-688-001-01	s	W 2, SMALL
1258	7-688-003-11	s	W 3, MIDDLE
1259	7-688-004-01	s	W 4, SMALL

Note *1 ; Included scanner assy, brush slip ring assy, and drum cover assy.
Note *2 ; Not included scanner assy, brush slip ring assy, shaft ground bushing assy, and drum cover assy.
Note *3 ; Included scanner assy, shaft ground bushing assy, and drum cover assy.

S/T SLIDER BLOCK, DVR-2000/2100

No.	Part No.	SP	Description
1301	A-6029-173-A	s	SLIDER (S) ASSY
1302	A-6029-175-A	s	SLIDER T ASSY
1303	A-6029-177-A	s	SENSOR (C) ASSY, END
1304	X-3715-377-1	s	GUIDE SUB ASSY, ROLLER
1305	3-715-813-01	s	RETAINER, FLANGE
1306	3-170-669-02	o	PLATE, SUPPORT
1307	3-170-670-01	o	LOCK BLOCK (S)
1308	3-170-671-01	o	LOCK BLOCK (T)
1309	3-170-672-01	s	SPACER (S), LOCK BLOCK
1310	3-170-672-11	s	SPACER (S), LOCK BLOCK
1311	3-170-672-21	s	SPACER (S), LOCK BLOCK
1312	3-170-672-31	s	SPACER (S), LOCK BLOCK
1313	3-170-673-01	s	SPACER (T), LOCK BLOCK
1314	3-170-673-11	s	SPACER (T), LOCK BLOCK
1315	3-170-673-21	s	SPACER (T), LOCK BLOCK
1316	3-170-673-31	s	SPACER (T), LOCK BLOCK
1317	3-170-674-01	s	SPACER (S1), RAIL BLOCK
1318	3-170-674-11	s	SPACER (S1), RAIL BLOCK
1319	3-170-674-21	s	SPACER (S1), RAIL BLOCK
1320	3-170-674-31	s	SPACER (S1), RAIL BLOCK
1321	3-170-675-01	s	SPACER (S2), RAIL BLOCK
1322	3-170-675-11	s	SPACER (S2), RAIL BLOCK
1323	3-170-675-21	s	SPACER (S2), RAIL BLOCK
1324	3-170-675-31	s	SPACER (S2), RAIL BLOCK
1325	3-170-676-01	s	SPACER (T1), RAIL BLOCK
1326	3-170-676-11	s	SPACER (T1), RAIL BLOCK
1327	3-170-676-21	s	SPACER (T1), RAIL BLOCK
1328	3-170-676-31	s	SPACER (T1), RAIL BLOCK
1329	3-170-677-01	s	SPACER (T2), RAIL BLOCK
1330	3-170-677-11	s	SPACER (T2), RAIL BLOCK
1331	3-170-677-21	s	SPACER (T2), RAIL BLOCK
1332	3-170-677-31	s	SPACER (T2), RAIL BLOCK
1333	3-170-722-01	s	GUIDE, SLANT
1334	3-170-723-02	o	PROTECTOR
1335	3-170-841-01	o	COVER (S), GREASE
1336	3-170-849-01	o	COVER (T), GREASE
1337	3-170-859-02	o	RAIL BLOCK (S)
1338	3-170-863-02	o	RAIL BLOCK (T)
1339	3-172-364-02	s	RAIL
1340	3-172-379-01	s	PLATE BLOCK (S), V
1341	3-172-380-01	s	PLATE BLOCK (T), V
1343	3-576-336-00	s	SPRING, COMPRESSION
1344	3-681-308-11	s	BOLT (M2X4), HOLE, HEXAGON
1345	3-689-039-11	s	SCREW (M2X6), SMALL
1346	3-715-803-01	s	FLANGE (2), ROLLER (LOWER)
1347	3-715-812-02	s	FLANGE
1348	3-715-813-01	s	RETAINER, FLANGE
1349	3-722-864-01	o	HOLDER (C), E
1350	3-722-964-02	s	GUIDE, SLIDER
1351	3-715-814-01	s	HOLDER (2), COLOR
1352	4-866-079-01	s	SPRING, COMPRESSION
1353	7-623-207-22	s	SW 2.6, TYPE 2
1354	7-688-001-01	s	W 2, SMALL
1355	7-688-002-03	s	W 2.6, SMALL
1356	3-701-505-00	s	SET SCREW, DOUBLE POINT 3x3
1357	2-990-373-01	s	BOLT M2x4, HEXAGON SOCKET

S/T SLIDER BLOCK

S/T SLIDER BLOCK

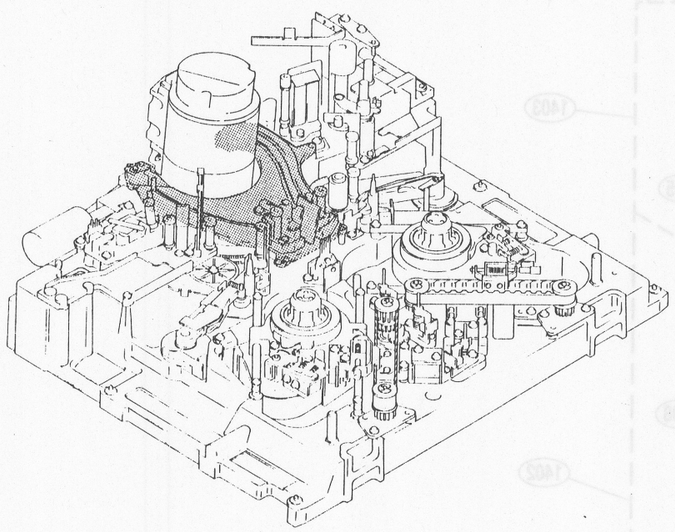

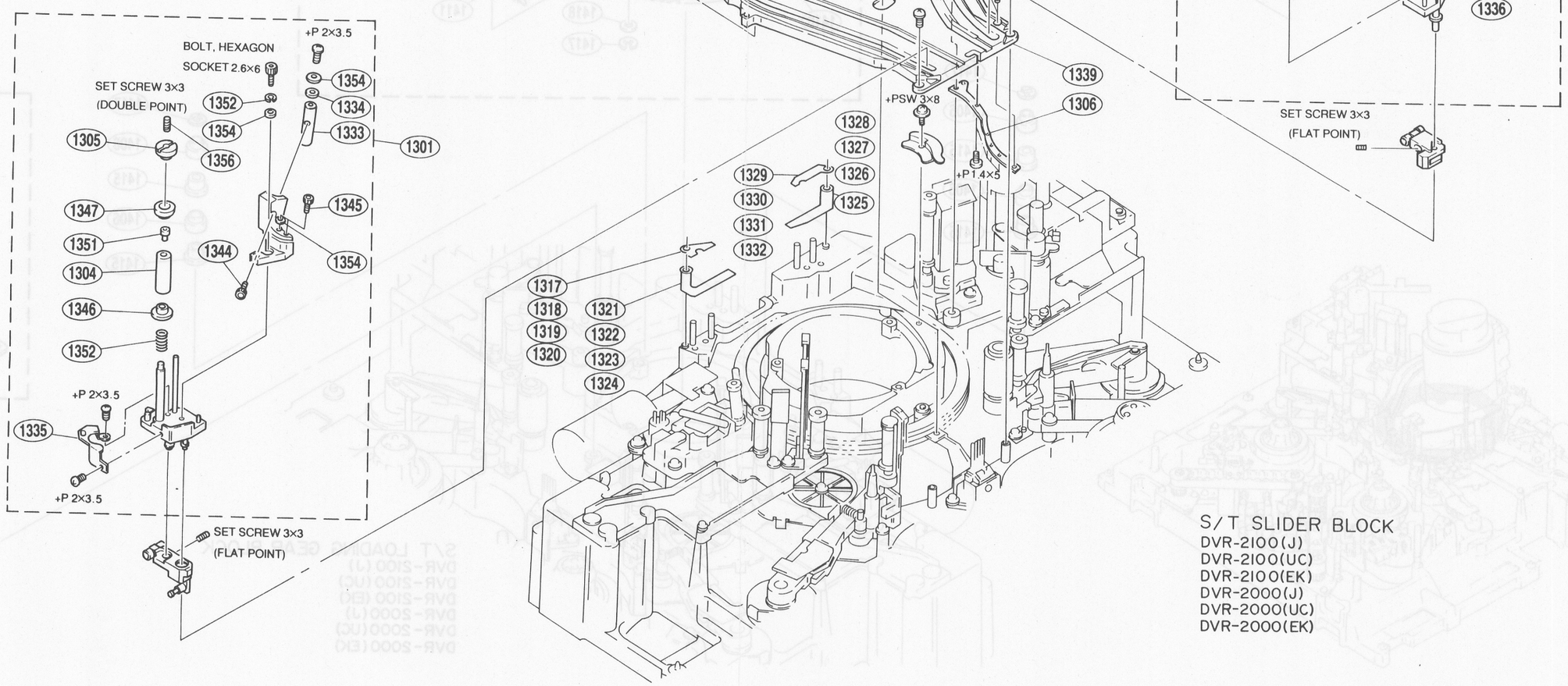

S/T SLIDER BLOCK
DVR-2100(J)
DVR-2100(UC)
DVR-2100(EK)
DVR-2000(J)
DVR-2000(UC)
DVR-2000(EK)

22-31

S/T LOADING GEAR BLOCK

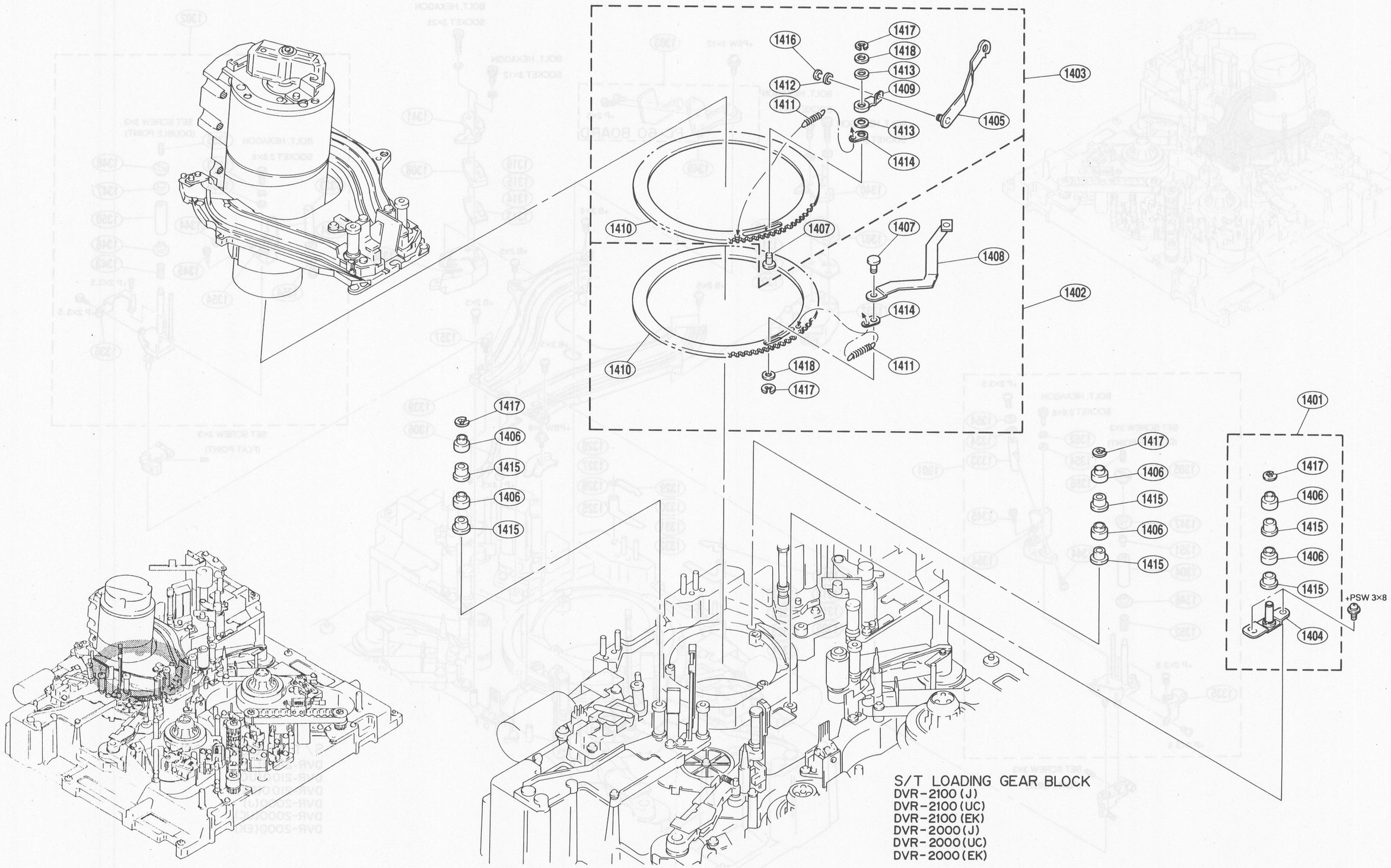

S/T LOADING GEAR BLOCK
DVR-2100 (J)
DVR-2100 (UC)
DVR-2100 (EK)
DVR-2000 (J)
DVR-2000 (UC)
DVR-2000 (EK)

S/T LOADING GEAR BLOCK, DVR-2000/2100

No.	Part No.	SP	Description
1401	A-6029-167-A	s	BASE ASSY, G PULLEY
1402	A-6029-168-A	s	RING ASSY, T THREADING
1403	A-6029-169-A	s	RING ASSY, S THREADING
1404	X-3165-935-1	o	BASE ASSY, G PULLEY
1405	X-3165-979-3	o	LINK ASSY, S2
1406	3-170-660-01	o	FLANGE, G PULLEY
1407	3-170-683-01	o	PIN (M), ARM
1408	3-170-684-02	o	LINK, MT
1409	3-170-685-01	o	LINK, S1
1410	3-170-762-01	o	GEAR, LOADING
1411	3-306-861-00	s	SPRING, TENSION
1412	3-701-437-01	s	WASHER
1413	3-701-441-11	s	WASHER
1414	3-715-473-01	o	HOOK, SPRING
1415	3-722-753-01	s	BEARING (FLANGED), BALL
1416	7-624-102-04	s	STOP RING 1.5, TYPE -E
1417	7-624-106-04	s	STOP RING 3.0, TYPE -E
1418	7-688-004-01	s	W 4, SMALL

S/T DRAWING ARMS & DRIVING GEAR BLOCK, DVR-2000/2100

No.	Part No.	SP	Description
1501	A-6029-170-A	s	BRACKET ASSY, T GEAR
1502	A-6029-232-A	s	ARM ASSY (RP), S
1503	A-6029-233-A	s	ARM ASSY (RP), T
1504	X-3165-933-2	o	LINK (S) ASSY, ROTARY
1505	X-3165-934-1	o	LINK (T) ASSY, ROTARY
1506	X-3165-936-1	o	BRACKET ASSY, T GEAR
1507	X-3165-938-1	o	LINK ASSY, RETURN
1508	X-3165-975-1	o	ARM ASSY, PINCH
1510	X-3167-092-1	s	PINCH ROLLER(95°N) ASSY
1511	X-3715-375-1	s	GUIDE (N) ASSY, ROLLER
1512	3-161-605-01	s	BEARING (FLANGE), BALL
1513	3-170-662-01	s	GEAR (S2)
1514	3-170-663-01	s	GEAR (S1)
1515	3-170-664-01	s	SPRING, TORSION
1516	3-170-690-01	o	LINK, SS
1517	3-170-699-01	o	COLLAR (A), P BEARING
1518	3-170-700-01	o	FLANGE, PINCH
1519	3-170-702-02	s	SPRING, PINCH RETURN
1520	3-170-703-01	o	LINK, BT
1521	3-172-356-01	o	STOPPER, SIDE
1522	3-172-358-01	s	SPACER, F
1523	3-173-377-01	s	SPRING, S TENSION REGULATOR
1524	3-539-846-00	s	SPRING, COMPRESSION
1525	3-558-379-02	o	SPRING, COMPRESSION
1526	3-651-607-00	s	BEARING, BALL
1527	3-701-441-11	s	WASHER
1528	3-701-444-21	s	WASHER
1529	3-715-449-01	o	RETAINER, BEARING
1530	3-715-809-01	s	SPACER (R)
1531	3-715-812-02	s	FLANGE
1532	3-168-641-01	s	RETAINER(T), FLANGE
1533	3-715-814-01	s	HOLDER (2), COLOR
1534	3-735-809-01	o	SCREW, PINCH
1535	4-866-079-01	s	SPRING, COMPRESSION
1536	7-624-102-04	s	STOP RING 1.5, TYPE -E
1537	7-624-106-04	s	STOP RING 3.0, TYPE -E
1538	7-624-132-11	s	STOP RING 10, TYPE C
1539	3-701-441-01	s	WASHER
1540	3-173-445-01	s	SPACER (S), SG
1541	3-168-641-01	s	RETAINER (T), FLANGE
1542	3-483-015-00	s	SPRING, COMPRESSION

S/T DRAWING ARMS AND DRIVING GEAR BLOCK

S/T DRAWING ARMS AND DRIVING GEAR BLOCK

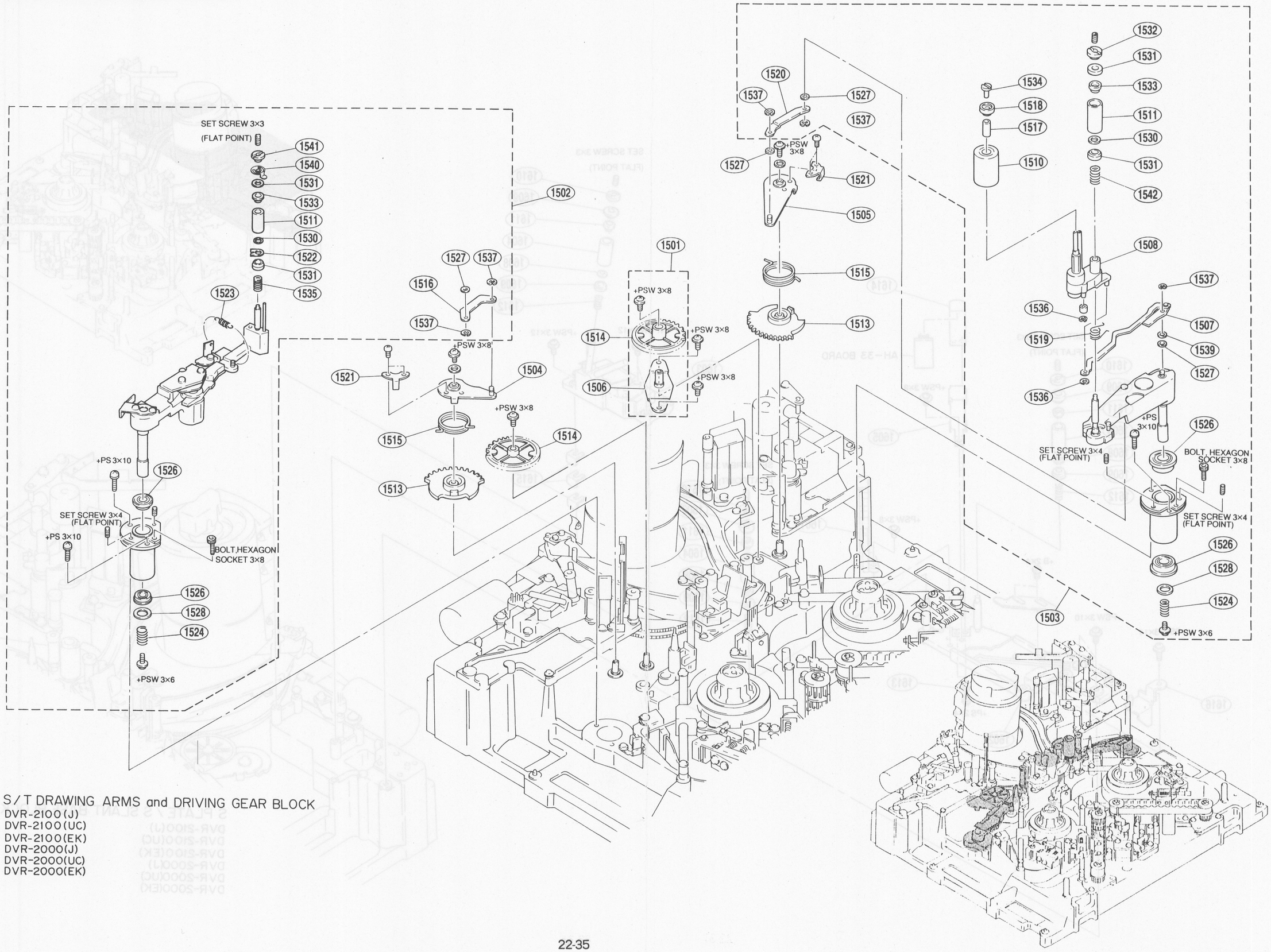

S/T DRAWING ARMS and DRIVING GEAR BLOCK
DVR-2100(J)
DVR-2100(UC)
DVR-2100(EK)
DVR-2000(J)
DVR-2000(UC)
DVR-2000(EK)

22-35

S PLATE/S SLANT BASE BLOCK

S PLATE/S SLANT BASE BLOCK

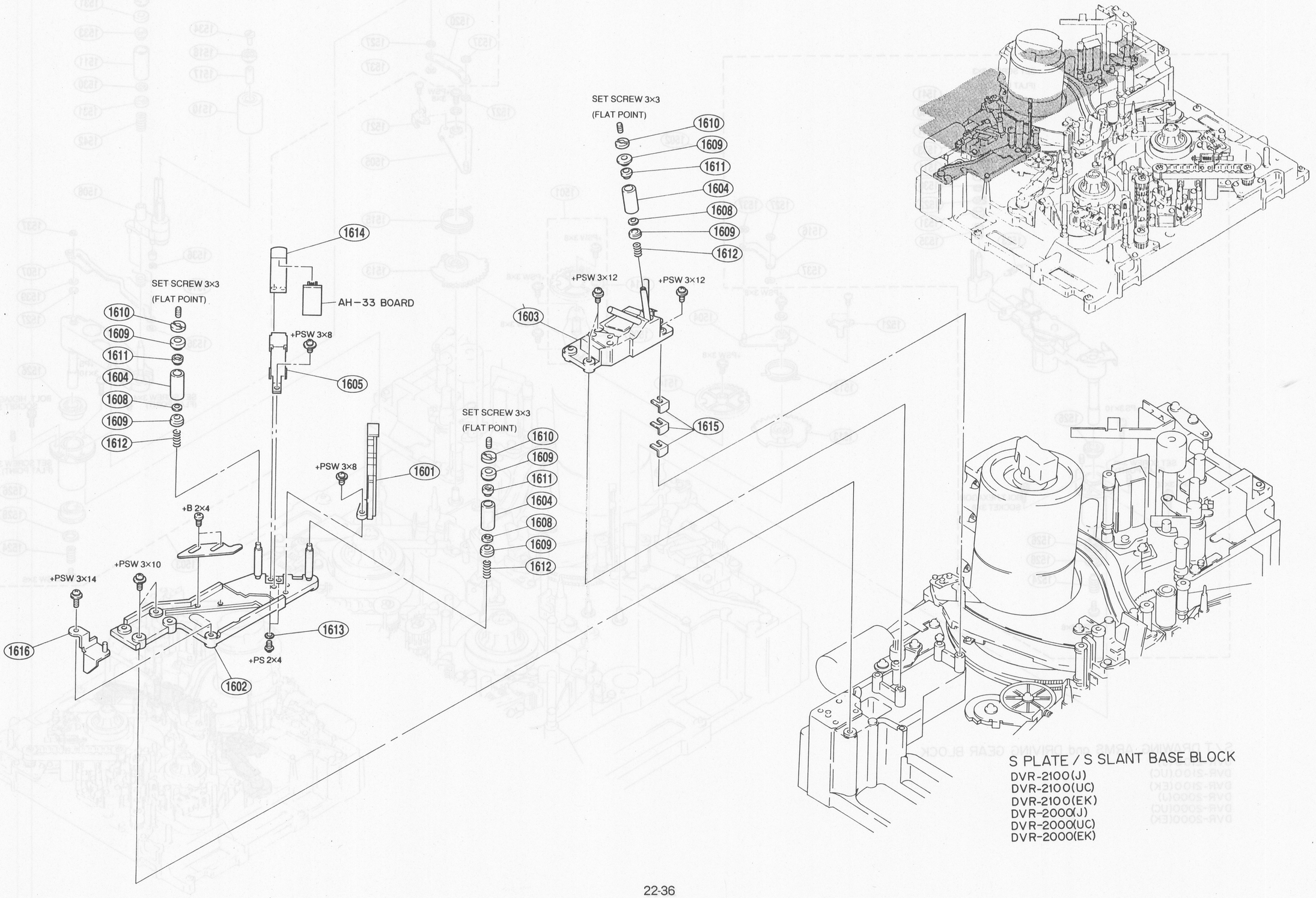

22-36

S PLATE/S SLANT BASE BLOCK, DVR-2000/2100

No.	Part No.	SP	Description
1601	A-6029-185-A	s	SENSOR ASSY, TAPE
1602	X-3166-213-1	o	PLATE ASSY, S
1603	X-3166-214-1	o	SLANT ASSY, S
1604	X-3715-375-1	s	GUIDE (N) ASSY, ROLLER
1605	3-170-732-01	o	SHIELD, FEH
1608	3-715-809-01	s	SPACER (R)
1609	3-715-812-02	s	FLANGE
1610	3-715-813-01	s	RETAINER, FLANGE
1611	3-715-814-01	s	HOLDER (2), COLOR
1612	4-866-079-01	s	SPRING, COMPRESSION
1613	7-688-001-01	s	W 2, SMALL
1614	8-825-770-01	s	HEAD, FE
1615	3-715-470-01	s	SPACER(ST),t:0.1mm
1616	X-3166-897-1	s	RETAINER ASSY,CASSETTE

LOADING MORTOR & M GEAR BOX BLOCK, DVR-2000/2100

No.	Part No.	SP	Description
1701	A-6029-178-A	s	BOX ASSY, GEAR
1702	A-6029-179-A	s	MOTOR ASSY, THREADING
1703	X-3165-949-1	o	PLATE ASSY, B
1704	X-3715-436-2	o	GEAR (M1-S) ASSY
1705	1-237-578-11	s	POTENTIOMETER 5K
1706	3-170-851-01	s	GEAR (M3)
1707	3-701-505-00	s	SET SCREW, DOUBLE POINT 3X3
1708	3-715-433-01	o	PIN, WORM
1709	3-715-435-01	s	GEAR (T), WORM
1710	3-715-477-01	s	GEAR (D)
1711	3-715-481-01	o	SLEEVE, GB
1712	3-722-601-01	o	GEAR (M2)
1713	3-722-633-01	o	HOLDER, PM
1714	3-722-681-01	o	GEAR (M1-W)
1715	3-722-682-01	o	SHAFT, WORM
1716	3-722-683-01	o	JOINT, WORM
1717	3-722-752-01	s	BEARING (FLANGED), BALL
1718	7-624-108-04	s	STOP RING 4.0, TYPE -E
1719	8-835-123-01	s	MOTOR, DC (MNR-7400A)

 LOADING MOTOR AND M GEAR BOX BLOCK

LOADING MOTOR AND M GEAR BOX BLOCK

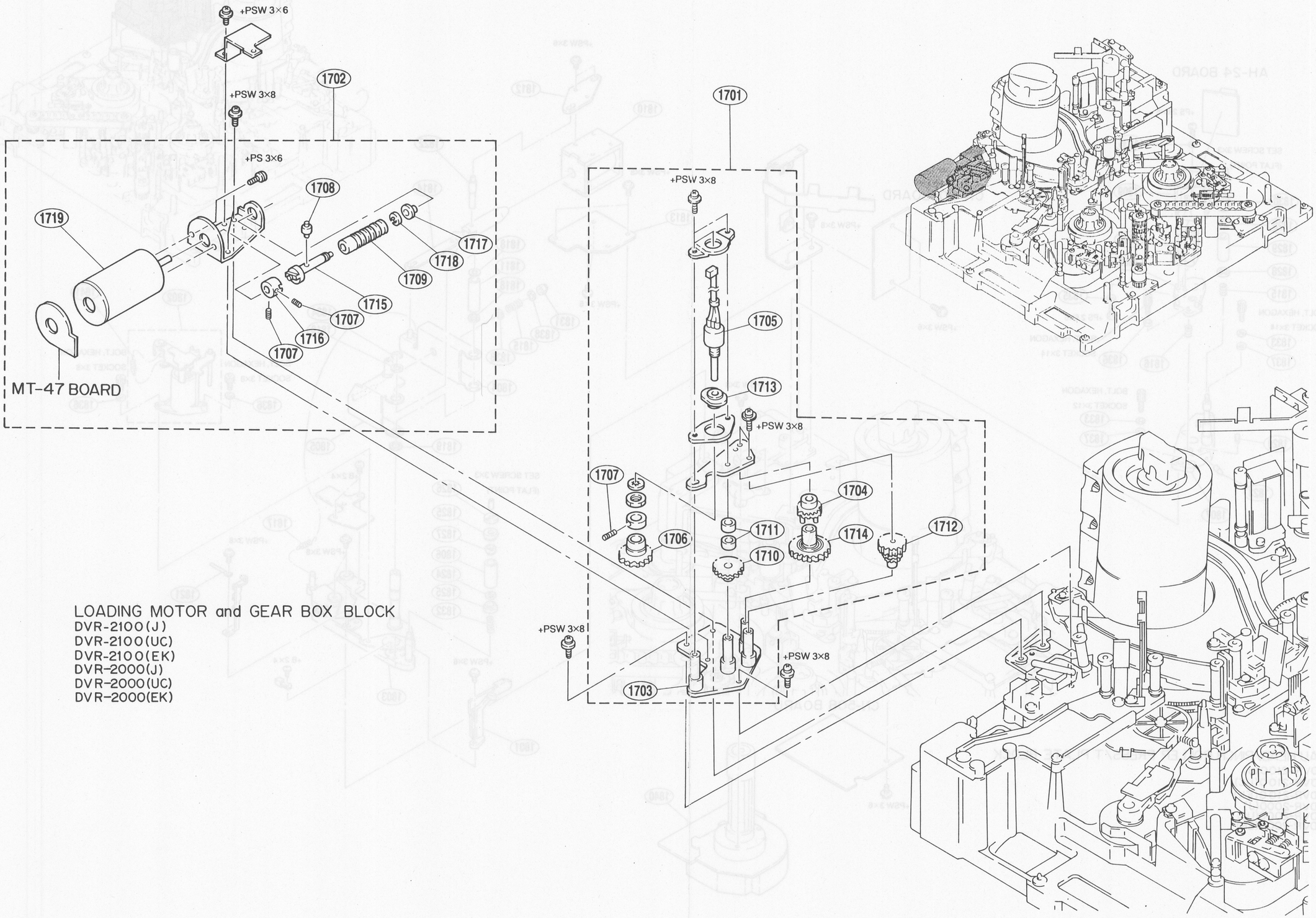

LOADING MOTOR and GEAR BOX BLOCK
DVR-2100(J)
DVR-2100(UC)
DVR-2100(EK)
DVR-2000(J)
DVR-2000(UC)
DVR-2000(EK)

AU HEAD/PINCH ROLLER PRESS/T PLATE BLOCK

AU HEAD/PINCH ROLLER PRESS/T PLATE BLOCK

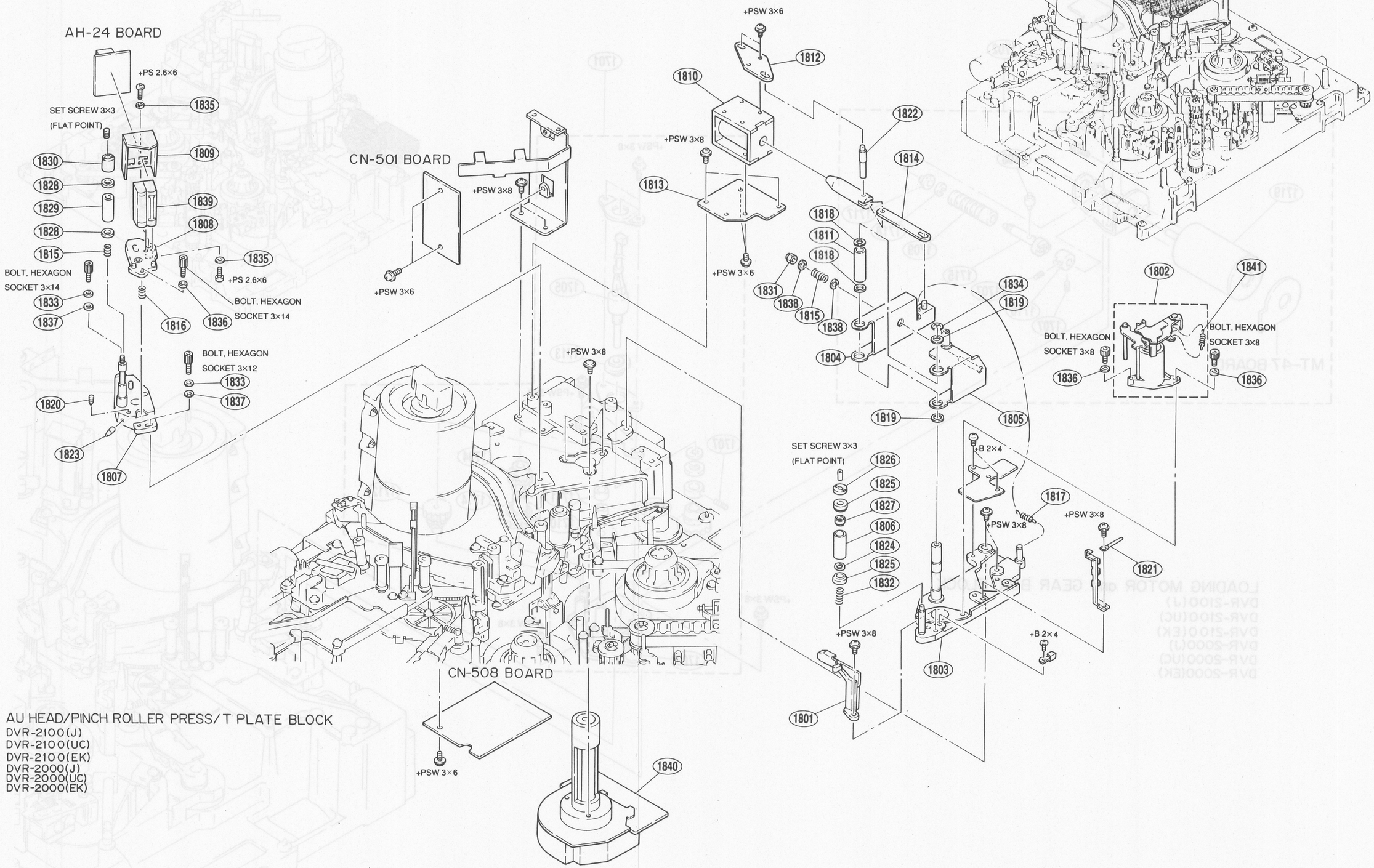

AU HEAD/PINCH ROLLER PRESS/T PLATE BLOCK
DVR-2100(J)
DVR-2100(UC)
DVR-2100(EK)
DVR-2000(J)
DVR-2000(UC)
DVR-2000(EK)

22-40

AU HEAD/PINCH ROLLER PRESS/T PLATE BLOCK, DVR-2000/2100

No.	Part No.	SP	Description
1801	A-6029-185-A	s	SENSOR ASSY, TAPE
1802	A-6029-234-A	s	TENSION REGULATOR ASSY (RP), T
1803	X-3165-960-1	o	BASE ASSY, T ROLLER
1804	X-3165-961-1	o	ARM ASSY, PRESS
1805	X-3165-962-1	s	PLATE ASSY, PRESS, PINCH
1806	X-3715-375-1	s	GUIDE (N) ASSY, ROLLER
1807	X-3715-437-1	o	BASE ASSY, AU
1808	X-3715-438-2	o	BASE ASSY, SLIDE
1809	X-3715-544-1	o	SHIELD ASSY, AU
1810	1-454-434-11	s	SOLENOID, PLUNGER
1811	3-170-733-01	o	SLEEVE, ROTARY
1812	3-170-750-01	o	PLATE, POSITIONING
1813	3-170-751-02	o	BRACKET, SOLENOID
1814	3-170-752-01	o	LINK, SOLENOID
1815	3-534-237-00	s	SPRING, COMPRESSION
1816	3-539-237-00	s	SPRING(3), COMPRESSION
1817	3-542-475-00	s	SPRING, TENSION
1818	3-701-444-21	s	WASHER, 6
1819	3-701-446-11	s	WASHER, 8
1820	3-701-508-00	s	SET SCREW, DOUBLE POINT 3x6
1821	3-701-822-00	o	HOLDER, WIRE
1822	3-715-398-02	o	PIN, SOLENOID
1823	3-715-401-01	o	PIN, AU LOCK
1824	3-715-809-11	s	SPACER (R)
1825	3-715-812-02	s	FLANGE
1826	3-715-813-01	s	RETAINER, FLANGE
1827	3-715-814-11	s	HOLDER (2), COLOR
1828	3-722-827-01	s	FLANGE, FIXED
1829	3-722-828-01	s	GUIDE, F FIXED
1830	3-722-829-01	o	RETAINER, GUIDE
1831	4-334-513-00	s	NUT, NYLON
1832	4-866-079-01	s	SPRING, COMPRESSION
1833	7-623-208-22	s	SW3, TYPE 2
1834	7-624-109-04	s	STOP RING 5.0, TYPE -E
1835	7-688-002-03	s	W 2.6, SMALL
1836	7-688-003-01	s	W 3, SMALL
1837	7-688-003-11	s	W 3, MIDDLE
1838	7-688-004-11	s	W 4, MIDDLE
1839	8-825-770-12	s	HEAD, AUDIO EPS288-5803
1840	8-835-443-01	s	MOTOR, DC SCU-0101A
1841	3-172-891-03	s	SPRING (T), TENSION

22-3. Electrical Parts List

NONPOLAR CAPACITOR

Replacement for nonpolar capacitors not given in board parts lists are shown in the following list.

Part No.	SP	Description
1-163-038-00	s	CAP, CHIP CERAMIC 0.1 50V

ELECTROLYTIC CAPACITOR

Replacement for electrolytic capacitors not given in board parts lists are shown in the following list.

Part No.	SP	Description			
1-124-915-11	s	CAP, ELECT	10	20%	63V
1-124-477-11	s	CAP, ELECT	47	20%	25V
1-124-443-00	s	CAP, ELECT	100	20%	10V
1-126-101-11	s	CAP, ELECT	100	20%	16V
1-124-478-11	s	CAP, ELECT	100	20%	25V

RESISTOR

Replacement for resistors not given in board parts lists are shown in the following list.

Part No.	SP	Description			
1-216-603-11	s	RES, CHIP METAL	10	1%	1/10W
1-216-604-11	s	RES, CHIP METAL	11	1%	1/10W
1-216-605-11	s	RES, CHIP METAL	12	1%	1/10W
1-216-606-11	s	RES, CHIP METAL	13	1%	1/10W
1-216-607-11	s	RES, CHIP METAL	15	1%	1/10W
1-216-608-11	s	RES, CHIP METAL	16	1%	1/10W
1-216-609-11	s	RES, CHIP METAL	18	1%	1/10W
1-216-610-11	s	RES, CHIP METAL	20	1%	1/10W
1-216-611-11	s	RES, CHIP METAL	22	1%	1/10W
1-216-612-11	s	RES, CHIP METAL	24	1%	1/10W
1-216-613-11	s	RES, CHIP METAL	27	1%	1/10W
1-216-614-11	s	RES, CHIP METAL	30	1%	1/10W
1-216-615-11	s	RES, CHIP METAL	33	1%	1/10W
1-216-616-11	s	RES, CHIP METAL	36	1%	1/10W
1-216-617-11	s	RES, CHIP METAL	39	1%	1/10W
1-216-618-11	s	RES, CHIP METAL	43	1%	1/10W
1-216-619-11	s	RES, CHIP METAL	47	1%	1/10W
1-216-620-11	s	RES, CHIP METAL	51	1%	1/10W
1-216-621-11	s	RES, CHIP METAL	56	1%	1/10W
1-216-622-11	s	RES, CHIP METAL	62	1%	1/10W
1-216-623-11	s	RES, CHIP METAL	68	1%	1/10W
1-216-624-11	s	RES, CHIP METAL	75	1%	1/10W
1-216-625-11	s	RES, CHIP METAL	82	1%	1/10W
1-216-626-11	s	RES, CHIP METAL	91	1%	1/10W
1-216-627-11	s	RES, CHIP METAL	100	1%	1/10W
1-216-628-11	s	RES, CHIP METAL	110	1%	1/10W
1-216-629-11	s	RES, CHIP METAL	120	1%	1/10W
1-216-630-11	s	RES, CHIP METAL	130	1%	1/10W
1-216-631-11	s	RES, CHIP METAL	150	1%	1/10W
1-216-632-11	s	RES, CHIP METAL	160	1%	1/10W
1-216-633-11	s	RES, CHIP METAL	180	1%	1/10W
1-216-634-11	s	RES, CHIP METAL	200	1%	1/10W
1-216-635-11	s	RES, CHIP METAL	220	1%	1/10W
1-216-636-11	s	RES, CHIP METAL	240	1%	1/10W
1-216-637-11	s	RES, CHIP METAL	270	1%	1/10W
1-216-638-11	s	RES, CHIP METAL	300	1%	1/10W
1-216-639-11	s	RES, CHIP METAL	330	1%	1/10W
1-216-640-11	s	RES, CHIP METAL	360	1%	1/10W
1-216-641-11	s	RES, CHIP METAL	390	1%	1/10W
1-216-642-11	s	RES, CHIP METAL	430	1%	1/10W
1-216-643-11	s	RES, CHIP METAL	470	1%	1/10W
1-216-644-11	s	RES, CHIP METAL	510	1%	1/10W
1-216-645-11	s	RES, CHIP METAL	560	1%	1/10W
1-216-646-11	s	RES, CHIP METAL	620	1%	1/10W
1-216-647-11	s	RES, CHIP METAL	680	1%	1/10W
1-216-648-11	s	RES, CHIP METAL	750	1%	1/10W
1-216-649-11	s	RES, CHIP METAL	820	1%	1/10W
1-216-650-11	s	RES, CHIP METAL	910	1%	1/10W
1-216-651-11	s	RES, CHIP METAL	1.0k	1%	1/10W
1-216-652-11	s	RES, CHIP METAL	1.1k	1%	1/10W
1-216-653-11	s	RES, CHIP METAL	1.2k	1%	1/10W
1-216-654-11	s	RES, CHIP METAL	1.3k	1%	1/10W
1-216-655-11	s	RES, CHIP METAL	1.5k	1%	1/10W
1-216-656-11	s	RES, CHIP METAL	1.6k	1%	1/10W
1-216-657-11	s	RES, CHIP METAL	1.8k	1%	1/10W
1-216-658-11	s	RES, CHIP METAL	2k	1%	1/10W
1-216-659-11	s	RES, CHIP METAL	2.2k	1%	1/10W

(RESISTOR)

Part No.	SP	Description
1-216-660-11	s	RES, CHIP METAL 2.4k 1% 1/10W
1-216-661-11	s	RES, CHIP METAL 2.7k 1% 1/10W
1-216-662-11	s	RES, CHIP METAL 3k 1% 1/10W
1-216-663-11	s	RES, CHIP METAL 3.3k 1% 1/10W
1-216-664-11	s	RES, CHIP METAL 3.6k 1% 1/10W
1-216-665-11	s	RES, CHIP METAL 3.9k 1% 1/10W
1-216-666-11	s	RES, CHIP METAL 4.3k 1% 1/10W
1-216-667-11	s	RES, CHIP METAL 4.7k 1% 1/10W
1-216-668-11	s	RES, CHIP METAL 5.1k 1% 1/10W
1-216-669-11	s	RES, CHIP METAL 5.6k 1% 1/10W
1-216-670-11	s	RES, CHIP METAL 6.2k 1% 1/10W
1-216-671-11	s	RES, CHIP METAL 6.8k 1% 1/10W
1-216-672-11	s	RES, CHIP METAL 7.5k 1% 1/10W
1-216-673-11	s	RES, CHIP METAL 8.2k 1% 1/10W
1-216-674-11	s	RES, CHIP METAL 9.1k 1% 1/10W
1-216-675-11	s	RES, CHIP METAL 10k 1% 1/10W
1-216-676-11	s	RES, CHIP METAL 11k 1% 1/10W
1-216-677-11	s	RES, CHIP METAL 12k 1% 1/10W
1-216-678-11	s	RES, CHIP METAL 13k 1% 1/10W
1-216-679-11	s	RES, CHIP METAL 15k 1% 1/10W
1-216-680-11	s	RES, CHIP METAL 16k 1% 1/10W
1-216-681-11	s	RES, CHIP METAL 18k 1% 1/10W
1-216-682-11	s	RES, CHIP METAL 20k 1% 1/10W
1-216-683-11	s	RES, CHIP METAL 22k 1% 1/10W
1-216-684-11	s	RES, CHIP METAL 24k 1% 1/10W
1-216-685-11	s	RES, CHIP METAL 27k 1% 1/10W
1-216-686-11	s	RES, CHIP METAL 30k 1% 1/10W
1-216-687-11	s	RES, CHIP METAL 33k 1% 1/10W
1-216-688-11	s	RES, CHIP METAL 36k 1% 1/10W
1-216-689-11	s	RES, CHIP METAL 39k 1% 1/10W
1-216-690-11	s	RES, CHIP METAL 43k 1% 1/10W
1-216-691-11	s	RES, CHIP METAL 47k 1% 1/10W
1-216-692-11	s	RES, CHIP METAL 51k 1% 1/10W
1-216-693-11	s	RES, CHIP METAL 56k 1% 1/10W
1-216-694-11	s	RES, CHIP METAL 62k 1% 1/10W
1-216-695-11	s	RES, CHIP METAL 68k 1% 1/10W
1-216-696-11	s	RES, CHIP METAL 75k 1% 1/10W
1-216-697-11	s	RES, CHIP METAL 82k 1% 1/10W
1-216-698-11	s	RES, CHIP METAL 91k 1% 1/10W
1-216-699-11	s	RES, CHIP METAL 100k 1% 1/10W
1-218-753-11	s	RES, CHIP METAL 110k 1% 1/10W
1-218-754-11	s	RES, CHIP METAL 120k 1% 1/10W
1-218-755-11	s	RES, CHIP METAL 130k 1% 1/10W
1-218-756-11	s	RES, CHIP METAL 150k 1% 1/10W
1-218-757-11	s	RES, CHIP METAL 160k 1% 1/10W
1-218-758-11	s	RES, CHIP METAL 180k 1% 1/10W
1-218-759-11	s	RES, CHIP METAL 200k 1% 1/10W
1-218-760-11	s	RES, CHIP METAL 220k 1% 1/10W
1-218-761-11	s	RES, CHIP METAL 240k 1% 1/10W
1-218-762-11	s	RES, CHIP METAL 270k 1% 1/10W
1-218-763-11	s	RES, CHIP METAL 300k 1% 1/10W
1-218-764-11	s	RES, CHIP METAL 330k 1% 1/10W
1-218-765-11	s	RES, CHIP METAL 360k 1% 1/10W
1-218-766-11	s	RES, CHIP METAL 390k 1% 1/10W
1-218-767-11	s	RES, CHIP METAL 430k 1% 1/10W
1-218-768-11	s	RES, CHIP METAL 470k 1% 1/10W
1-218-769-11	s	RES, CHIP METAL 510k 1% 1/10W
1-218-770-11	s	RES, CHIP METAL 560k 1% 1/10W
1-218-771-11	s	RES, CHIP METAL 620k 1% 1/10W

(RESISTOR)

Part No.	SP	Description
1-218-772-11	s	RES, CHIP METAL 680k 1% 1/10W
1-218-773-11	s	RES, CHIP METAL 750k 1% 1/10W
1-218-774-11	s	RES, CHIP METAL 820k 1% 1/10W
1-218-775-11	s	RES, CHIP METAL 910k 1% 1/10W
1-218-776-11	s	RES, CHIP METAL 1M 1% 1/10W

AE-12 BOARD/BOARD NO. 1-639-123-11(DVR-2000/2100)

Ref. No. or Q'ty	Part No.	SP	Description
BOARD NO. 1-639-123-11			
DVR-2000(J) : S/N 10001 thru 10099			
DVR-2000(UC): S/N 10001 thru 10099			
DVR-2000(EK): S/N 10001 thru 10099			
DVR-2100(J) : S/N 10001 thru 10399			
DVR-2100(UC): S/N 10001 thru 10399			
DVR-2100(EK): S/N 10001 thru 10399			
#1pc	A-6013-126-A	o	MOUNTED CIRCUIT BOARD, AE-12
This board includes one DUS-481 board. For details of DUS-481 board, see the list of DUS-481 BOARD.			
1pc	1-566-085-11	s	CONNECTOR, 20P, MALE
1pc	3-171-894-21	o	LABEL (V), SERIAL NUMBER
2pcs	3-673-249-11	o	LEVER, PC BOARD
2pcs	7-626-320-11	s	PIN, SPRING 3X8
4pcs	7-682-948-01	s	SCREW, +PSW 3x8
6pcs	7-685-547-14	s	SCREW, +BVTP 3x10 TYPE2 N-S
C100	1-163-127-00	s	CERAMIC, CHIP 270pF 5% 50V
C101	1-130-475-00	s	MYLAR 0.0022uF 5% 50V
C102	1-130-483-00	s	MYLAR 0.01uF 5% 50V
C103	1-124-234-00	s	ELECT 22uF 20% 16V
C104	1-124-234-00	s	ELECT 22uF 20% 16V
C105	1-131-349-00	s	TANTALUM 2.2uF 10% 35V
C106	1-130-475-00	s	MYLAR 0.0022uF 5% 50V
C107	1-130-483-00	s	MYLAR 0.01uF 5% 50V
C108	1-124-234-00	s	ELECT 22uF 20% 16V
C109	1-124-234-00	s	ELECT 22uF 20% 16V
C110	1-131-349-00	s	TANTALUM 2.2uF 10% 35V
C111	1-164-161-11	s	CERAMIC, CHIP 0.0022uF 10% 100V
C112	1-163-133-00	s	CERAMIC, CHIP 470pF 5% 50V
C113	1-163-135-00	s	CERAMIC, CHIP 560pF 5% 50V
C114	1-131-360-00	s	TANTALUM 15uF 20% 25V
C115	1-124-234-00	s	ELECT 22uF 20% 16V
C116	1-124-234-00	s	ELECT 22uF 20% 16V
C117	1-109-561-00	s	MICA 0.001uF 5% 100V
C118	1-131-360-00	s	TANTALUM 15uF 20% 25V
C119	1-164-161-11	s	CERAMIC, CHIP 0.0022uF 10% 100V
C120	1-163-133-00	s	CERAMIC, CHIP 470pF 5% 50V
C121	1-163-135-00	s	CERAMIC, CHIP 560pF 5% 50V
C122	1-124-234-00	s	ELECT 22uF 20% 16V
C123	1-124-234-00	s	ELECT 22uF 20% 16V
C124	1-109-561-00	s	MICA 0.001uF 5% 100V
C125	1-131-360-00	s	TANTALUM 15uF 20% 25V
C126	1-164-232-11	s	CERAMIC 0.01uF 10% 100V
C127	1-163-133-00	s	CERAMIC, CHIP 470pF 5% 50V
C128	1-163-135-00	s	CERAMIC, CHIP 560pF 5% 50V
C129	1-163-124-00	s	CERAMIC, CHIP 200pF 5% 50V
C130	1-163-124-00	s	CERAMIC, CHIP 200pF 5% 50V
C131	1-164-232-11	s	CERAMIC 0.01uF 10% 100V
C132	1-164-232-11	s	CERAMIC 0.01uF 10% 100V
C133	1-109-637-00	s	MICA 0.001uF 2% 500V
C134	1-124-234-00	s	ELECT 22uF 20% 16V
C135	1-124-234-00	s	ELECT 22uF 20% 16V
C138	1-163-127-00	s	CERAMIC, CHIP 270pF 5% 50V
C139	1-131-360-00	s	TANTALUM 15uF 20% 25V
C140	1-164-232-11	s	CERAMIC 0.01uF 10% 100V
C141	1-163-133-00	s	CERAMIC, CHIP 470pF 5% 50V
C142	1-163-135-00	s	CERAMIC, CHIP 560pF 5% 50V
C143	1-163-124-00	s	CERAMIC, CHIP 200pF 5% 50V

NOTE : Please see page 22-42 for the parts that are not listed in the parts list.

(AE-12 BOARD/BOARD NO. 1-639-123-11(DVR-2000/2100))

Ref. No. or Q'ty	Part No.	SP	Description
C144	1-163-124-00	s	CERAMIC, CHIP 200pF 5% 50V
C145	1-124-234-00	s	ELECT 22uF 20% 16V
C146	1-124-234-00	s	ELECT 22uF 20% 16V
C147	1-164-232-11	s	CERAMIC 0.01uF 10% 100V
C148	1-164-232-11	s	CERAMIC 0.01uF 10% 100V
C149	1-109-638-00	s	MICA 0.0012uF 2% 500V
C200	1-126-103-11	s	ELECT 470uF 20% 16V
C201	1-126-103-11	s	ELECT 470uF 20% 16V
C203	1-126-103-11	s	ELECT 470uF 20% 16V
C204	1-126-103-11	s	ELECT 470uF 20% 16V
C206	1-126-103-11	s	ELECT 470uF 20% 16V
C207	1-126-103-11	s	ELECT 470uF 20% 16V
C209	1-124-234-00	s	ELECT 22uF 20% 16V
C210	1-124-234-00	s	ELECT 22uF 20% 16V
C211	1-126-103-11	s	ELECT 470uF 20% 16V
C212	1-126-103-11	s	ELECT 470uF 20% 16V
C214	1-124-234-00	s	ELECT 22uF 20% 16V
C215	1-124-234-00	s	ELECT 22uF 20% 16V
C250	1-163-127-00	s	CERAMIC, CHIP 270pF 5% 50V
C251	1-130-483-00	s	MYLAR 0.01uF 5% 50V
C252	1-124-234-00	s	ELECT 22uF 20% 16V
C253	1-124-234-00	s	ELECT 22uF 20% 16V
C254	1-131-349-00	s	TANTALUM 2.2uF 10% 35V
C255	1-163-127-00	s	CERAMIC, CHIP 270pF 5% 50V
C256	1-130-475-00	s	MYLAR 0.0022uF 5% 50V
C257	1-130-483-00	s	MYLAR 0.01uF 5% 50V
C258	1-124-234-00	s	ELECT 22uF 20% 16V
C259	1-124-234-00	s	ELECT 22uF 20% 16V
C260	1-131-349-00	s	TANTALUM 2.2uF 10% 35V
C261	1-163-033-00	s	CERAMIC, CHIP 0.022uF 50V
C262	1-163-033-00	s	CERAMIC, CHIP 0.022uF 50V
C263	1-163-033-00	s	CERAMIC, CHIP 0.022uF 50V
C264	1-163-033-00	s	CERAMIC, CHIP 0.022uF 50V
C265	1-163-033-00	s	CERAMIC, CHIP 0.022uF 50V
C266	1-163-033-00	s	CERAMIC, CHIP 0.022uF 50V
C267	1-163-033-00	s	CERAMIC, CHIP 0.022uF 50V
C270	1-163-033-00	s	CERAMIC, CHIP 0.022uF 50V
C271	1-163-033-00	s	CERAMIC, CHIP 0.022uF 50V
C273	1-163-033-00	s	CERAMIC, CHIP 0.022uF 50V
C274	1-130-475-00	s	MYLAR 0.0022uF 5% 50V
C300	1-124-234-00	s	ELECT 22uF 20% 16V
C301	1-124-234-00	s	ELECT 22uF 20% 16V
C302	1-131-360-00	s	TANTALUM 15uF 20% 25V
C303	1-164-161-11	s	CERAMIC, CHIP 0.0022uF 10% 100V
C304	1-163-133-00	s	CERAMIC, CHIP 470pF 5% 50V
C305	1-163-251-11	s	CERAMIC, CHIP 100pF 5% 50V
C308	1-124-234-00	s	ELECT 22uF 20% 16V
C309	1-124-234-00	s	ELECT 22uF 20% 16V
C310	1-161-900-11	s	CERAMIC 1uF 50V
C311	1-161-900-11	s	CERAMIC 1uF 50V
C312	1-161-900-11	s	CERAMIC 1uF 50V
C313	1-109-627-00	s	MICA 150pF 2% 500V
C314	1-124-234-00	s	ELECT 22uF 20% 16V
C315	1-131-360-00	s	TANTALUM 15uF 20% 25V
C316	1-130-475-00	s	MYLAR 0.0022uF 5% 50V
C317	1-130-495-00	s	MYLAR 0.1uF 5% 50V
C318	1-161-900-11	s	CERAMIC 1uF 50V
C319	1-107-157-00	s	MICA 27pF 5% 500V
C323	1-124-234-00	s	ELECT 22uF 20% 16V

NOTE : For the parts marked # in the parts list, refer to "Section 23 Changed Parts".

(AE-12 BOARD/BOARD NO. 1-639-123-11(DVR-2000/2100))

Ref. No. or Q'ty	Part No.	SP	Description
C324	1-124-234-00	s	ELECT 22uF 20% 16V
C325	1-131-395-00	s	TANTALUM 100uF 10% 3.15V
C326	1-162-768-11	s	CERAMIC 0.0018uF 5% 50V
C327	1-162-774-11	s	CERAMIC 0.0056 5% 50V
C328	1-130-479-00	s	MYLAR 0.0047uF 5% 50V
C329	1-131-360-00	s	TANTALUM 15uF 20% 25V
C330	1-124-589-11	s	ELECT 47uF 20% 16V
C331	1-124-234-00	s	ELECT 22uF 20% 16V
C332	1-124-234-00	s	ELECT 22uF 20% 16V
C335	1-124-234-00	s	ELECT 22uF 20% 16V
C336	1-124-234-00	s	ELECT 22uF 20% 16V
C337	1-163-275-11	s	CERAMIC 0.001uF 5% 50V
C338	1-131-360-00	s	TANTALUM 15uF 20% 25V
C339	1-124-234-00	s	ELECT 22uF 20% 16V
C340	1-124-234-00	s	ELECT 22uF 20% 16V
C341	1-163-033-00	s	CERAMIC, CHIP 0.022uF 50V
C342	1-163-033-00	s	CERAMIC, CHIP 0.022uF 50V
C343	1-163-033-00	s	CERAMIC, CHIP 0.022uF 50V
C344	1-163-033-00	s	CERAMIC, CHIP 0.022uF 50V
C346	1-163-033-00	s	CERAMIC, CHIP 0.022uF 50V
C347	1-163-033-00	s	CERAMIC, CHIP 0.022uF 50V
C348	1-162-765-11	s	CERAMIC 0.001uF 5% 50V
C400	1-124-234-00	s	ELECT 22uF 20% 16V
C401	1-124-234-00	s	ELECT 22uF 20% 16V
C402	1-131-360-00	s	TANTALUM 15uF 20% 25V
C403	1-131-347-00	s	TANTALUM 1uF 10% 35V
C404	1-163-125-00	s	CERAMIC, CHIP 220pF 5% 50V
C405	1-131-347-00	s	TANTALUM 1uF 10% 35V
C407	1-163-275-11	s	CERAMIC 0.001uF 5% 50V
C408	1-124-234-00	s	ELECT 22uF 20% 16V
C409	1-124-234-00	s	ELECT 22uF 20% 16V
C410	1-131-347-00	s	TANTALUM 1uF 10% 35V
C411	1-124-234-00	s	ELECT 22uF 20% 16V
C412	1-131-360-00	s	TANTALUM 15uF 20% 25V
C413	1-164-161-11	s	CERAMIC, CHIP 0.0022uF 10% 100V
C414	1-163-133-00	s	CERAMIC, CHIP 470pF 5% 50V
C415	1-163-135-00	s	CERAMIC, CHIP 560pF 5% 50V
C416	1-124-234-00	s	ELECT 22uF 20% 16V
C417	1-124-234-00	s	ELECT 22uF 20% 16V
C418	1-161-900-11	s	CERAMIC 1uF 50V
C419	1-109-549-00	s	MICA 390pF 5% 100V
C420	1-109-628-00	s	MICA 160pF 2% 500V
C422	1-124-234-00	s	ELECT 22uF 20% 16V
C423	1-124-234-00	s	ELECT 22uF 20% 16V
C424	1-163-137-00	s	CERAMIC, CHIP 680pF 5% 50V
C425	1-130-475-00	s	MYLAR 0.0022uF 5% 50V
C426	1-162-735-11	s	CERAMIC 0.0012uF 1% 50V
C427	1-162-776-11	s	MYLAR 0.0082uF 5% 50V
C428	1-124-234-00	s	ELECT 22uF 20% 16V
C429	1-124-234-00	s	ELECT 22uF 20% 16V
C430	1-163-275-11	s	CERAMIC 0.001uF 5% 50V
C431	1-161-900-11	s	CERAMIC 1uF 50V
C435	1-124-234-00	s	ELECT 22uF 20% 16V
C436	1-124-234-00	s	ELECT 22uF 20% 16V
C437	1-131-395-00	s	TANTALUM 100uF 10% 3.15V
C438	1-130-477-00	s	MYLAR 0.0033uF 5% 50V
C439	1-163-275-11	s	CERAMIC 0.001uF 5% 50V
C440	1-163-121-00	s	CERAMIC, CHIP 150pF 5% 50V
C441	1-124-234-00	s	ELECT 22uF 20% 16V

NOTE : Please see page 22-42 for the parts that are not listed in the parts list.

(AE-12 BOARD/BOARD NO. 1-639-123-11(DVR-2000/2100))

Ref. No. or Q'ty	Part No.	SP	Description
C442	1-163-014-00	s	CERAMIC 0.0027uF 10% 50V
C443	1-124-234-00	s	ELECT 22uF 20% 16V
C444	1-164-232-11	s	CERAMIC 0.01uF 10% 100V
C445	1-164-232-11	s	CERAMIC 0.01uF 10% 100V
C446	1-163-275-11	s	CERAMIC 0.001uF 5% 50V
C447	1-163-122-00	s	CERAMIC 160pF 5% 50V
C448	1-131-347-00	s	TANTALUM 1uF 10% 35V
C450	1-163-275-11	s	CERAMIC 0.001uF 5% 50V
C451	1-131-349-00	s	TANTALUM 2.2uF 10% 35V
C452	1-124-234-00	s	ELECT 22uF 20% 16V
C453	1-124-234-00	s	ELECT 22uF 20% 16V
C454	1-131-360-00	s	TANTALUM 15uF 20% 25V
C455	1-131-349-00	s	TANTALUM 2.2uF 10% 35V
C456	1-124-234-00	s	ELECT 22uF 20% 16V
C457	1-124-234-00	s	ELECT 22uF 20% 16V
C458	1-124-234-00	s	ELECT 22uF 20% 16V
C459	1-124-234-00	s	ELECT 22uF 20% 16V
C461	1-163-033-00	s	CERAMIC, CHIP 0.022uF 50V
C462	1-163-033-00	s	CERAMIC, CHIP 0.022uF 50V
C463	1-163-033-00	s	CERAMIC, CHIP 0.022uF 50V
C464	1-163-033-00	s	CERAMIC, CHIP 0.022uF 50V
C465	1-163-033-00	s	CERAMIC, CHIP 0.022uF 50V
C466	1-163-033-00	s	CERAMIC, CHIP 0.022uF 50V
C467	1-130-492-11	s	MYLAR 0.056uF 5% 50V
C500	1-124-234-00	s	ELECT 22uF 20% 16V
C501	1-124-234-00	s	ELECT 22uF 20% 16V
C502	1-131-343-00	s	TANTALUM 0.22uF 10% 35V
C503	1-130-491-00	s	MYLAR 0.047uF 5% 50V
C504	1-161-900-11	s	CERAMIC 1uF 50V
C505	1-131-360-00	s	TANTALUM 15uF 20% 25V
C506	1-164-161-11	s	CERAMIC, CHIP 0.0022uF 10% 100V
C507	1-163-133-00	s	CERAMIC, CHIP 470pF 5% 50V
C508	1-163-251-11	s	CERAMIC, CHIP 100pF 5% 50V
C511	1-124-234-00	s	ELECT 22uF 20% 16V
C512	1-124-234-00	s	ELECT 22uF 20% 16V
C513	1-161-900-11	s	CERAMIC 1uF 50V
C514	1-161-900-11	s	CERAMIC 1uF 50V
C515	1-161-900-11	s	CERAMIC 1uF 50V
C516	1-109-627-00	s	MICA 150pF 2% 500V
C517	1-107-157-00	s	MICA 27pF 5% 500V
C518	1-131-360-00	s	TANTALUM 15uF 20% 25V
C519	1-124-234-00	s	ELECT 22uF 20% 16V
C520	1-124-234-00	s	ELECT 22uF 20% 16V
C521	1-130-474-00	s	MYLAR 0.0018uF 5% 50V
C522	1-130-495-00	s	MYLAR 0.1uF 5% 50V
C523	1-161-900-11	s	CERAMIC 1uF 50V
C526	1-124-234-00	s	ELECT 22uF 20% 16V
C527	1-124-234-00	s	ELECT 22uF 20% 16V
C529	1-131-360-00	s	TANTALUM 15uF 20% 25V
C530	1-124-234-00	s	ELECT 22uF 20% 16V
C531	1-124-234-00	s	ELECT 22uF 20% 16V
C534	1-130-493-00	s	MYLAR 0.068uF 5% 50V
C535	1-131-360-00	s	TANTALUM 15uF 20% 25V
C536	1-124-234-00	s	ELECT 22uF 20% 16V
C537	1-124-234-00	s	ELECT 22uF 20% 16V
C538	1-163-263-11	s	CERAMIC, CHIP 330pF 5% 50V
C539	1-164-182-11	s	CERAMIC CHIP 3300pF 10% 100V
C540	1-164-182-11	s	CERAMIC CHIP 3300pF 10% 100V
C541	1-163-011-11	s	CERAMIC 0.0015uF 10% 50V

NOTE : For the parts marked # in the parts list, refer to "Section 23 Changed Parts".

(AE-12 BOARD/BOARD NO. 1-639-123-11(DVR-2000/2100))

Ref. No. or Q'ty	Part No.	SP	Description
C542	1-131-360-00	s	TANTALUM 15uF 20% 25V
C543	1-124-234-00	s	ELECT 22uF 20% 16V
C544	1-124-234-00	s	ELECT 22uF 20% 16V
C545	1-131-349-00	s	TANTALUM 2.2uF 10% 35V
C546	1-131-360-00	s	TANTALUM 15uF 20% 25V
C547	1-163-235-11	s	CERAMIC, CHIP 22pF 5% 50V
C548	1-131-360-00	s	TANTALUM 15uF 20% 25V
C549	1-124-589-11	s	ELECT 47uF 20% 16V
C550	1-124-234-00	s	ELECT 22uF 20% 16V
C551	1-124-234-00	s	ELECT 22uF 20% 16V
C553	1-124-234-00	s	ELECT 22uF 20% 16V
C554	1-124-234-00	s	ELECT 22uF 20% 16V
C555	1-163-033-00	s	CERAMIC, CHIP 0.022uF 50V
C558	1-163-033-00	s	CERAMIC, CHIP 0.022uF 50V
C561	1-131-360-00	s	TANTALUM 15uF 20% 25V
C562	1-124-234-00	s	ELECT 22uF 20% 16V
C563	1-124-234-00	s	ELECT 22uF 20% 16V
C564	1-131-395-00	s	TANTALUM 100uF 10% 3.15V
C565	1-162-768-11	s	CERAMIC 0.0018uF 5% 50V
C566	1-162-774-11	s	CERAMIC 0.0056 5% 50V
C567	1-131-360-00	s	TANTALUM 15uF 20% 25V
C568	1-124-234-00	s	ELECT 22uF 20% 16V
C569	1-124-234-00	s	ELECT 22uF 20% 16V
C570	1-163-263-11	s	CERAMIC, CHIP 330pF 5% 50V
C571	1-164-182-11	s	CERAMIC CHIP 3300pF 10% 100V
C572	1-163-011-11	s	CERAMIC 0.0015uF 10% 50V
C575	1-131-360-00	s	TANTALUM 15uF 20% 25V
C576	1-131-349-00	s	TANTALUM 2.2uF 10% 35V
C577	1-131-360-00	s	TANTALUM 15uF 20% 25V
C578	1-163-235-11	s	CERAMIC 22pF 5% 50V
C579	1-131-360-00	s	TANTALUM 15uF 20% 25V
C580	1-164-182-11	s	CERAMIC CHIP 3300pF 10% 100V
C581	1-163-235-11	s	CERAMIC, CHIP 22pF 5% 50V
C582	1-124-234-00	s	ELECT 22uF 20% 16V
C583	1-124-234-00	s	ELECT 22uF 20% 16V
C584	1-162-768-11	s	CERAMIC 0.0018uF 5% 50V
C587	1-163-235-11	s	CERAMIC 22pF 5% 50V
CN707	1-506-748-11	s	CONNECTOR, DIN 96P, MALE
CN708	1-506-746-11	s	CONNECTOR, DIN 48P, MALE
CN709	1-506-746-11	s	CONNECTOR, DIN 48P, MALE
D100	8-719-800-76	s	DIODE 1SS226
D101	8-719-800-76	s	DIODE 1SS226
D102	8-719-800-76	s	DIODE 1SS226
D300	8-719-800-76	s	DIODE 1SS226
D303	8-719-105-92	s	DIODE RD5.6M-B3
D304	8-719-105-92	s	DIODE RD5.6M-B3
D305	8-719-400-35	s	LED LN35BP, GRN
D400	8-719-800-76	s	DIODE 1SS226
D401	8-719-800-76	s	DIODE 1SS226
D404	8-719-800-76	s	DIODE 1SS226
D405	8-719-800-76	s	DIODE 1SS226
D500	8-719-800-76	s	DIODE 1SS226
D504	8-719-400-35	s	LED LN35BP, GRN
IC100	8-759-926-44	s	IC SN74HC240ANS
IC101	8-759-637-09	s	IC M5238FP-722
IC102	8-759-637-09	s	IC M5238FP-722
IC103	1-567-794-11	s	OSCILLATOR, CRYSTAL 14.31818MHz
IC104	1-577-540-11	s	OSCILLATOR, CRYSTAL 17.734476MHz

NOTE : Please see page 22-42 for the parts that are not listed in the parts list.

(AE-12 BOARD/BOARD NO. 1-639-123-11(DVR-2000/2100))

Ref. No. or Q'ty	Part No.	SP	Description
IC105	8-759-637-09	s	IC M5238FP-722
IC106	8-759-925-73	s	IC SN74HC03NS
IC107	8-759-637-09	s	IC M5238FP-722
IC108	8-759-637-09	s	IC M5238FP-722
IC109	8-759-925-90	s	IC SN74HC74NS
IC110	8-759-113-77	s	IC UPD5201G
IC111	8-759-637-09	s	IC M5238FP-722
IC112	8-759-637-09	s	IC M5238FP-722
IC113	8-759-926-23	s	IC SN74HC163NS
IC114	8-759-926-23	s	IC SN74HC163NS
IC115	8-759-925-90	s	IC SN74HC74NS
IC116	8-759-926-44	s	IC SN74HC240ANS
IC200	8-759-982-25	s	IC RC78L09A
IC201	8-759-982-22	s	IC RC78L06A
IC202	8-759-982-47	s	IC RC79L09A
IC203	8-759-982-45	s	IC RC79L06A
IC204	8-759-926-49	s	IC SN74HC245NS
IC205	8-759-926-48	s	IC SN74HC244NS
IC207	8-759-926-44	s	IC SN74HC240ANS
IC208	8-759-938-68	s	IC CXD1095Q
IC210	8-759-926-44	s	IC SN74HC240ANS
IC211	8-759-926-44	s	IC SN74HC240ANS
IC300	8-759-637-09	s	IC M5238FP-722
IC303	8-759-925-73	s	IC SN74HC03NS
IC304	8-759-204-88	s	IC TC40H368F
IC305	8-759-926-44	s	IC SN74HC240ANS
IC306	8-759-926-44	s	IC SN74HC240ANS
IC307	8-759-926-44	s	IC SN74HC240ANS
IC308	8-759-637-09	s	IC M5238FP-722
IC309	8-759-941-27	s	IC MB4002PF
IC310	8-759-637-09	s	IC M5238FP-722
IC311	1-567-795-11	s	OSCILLATOR, CRYSTAL 14.500MHz
IC312	8-759-503-11	s	IC CXD8167Q
IC313	8-759-637-09	s	IC M5238FP-722
IC314	8-759-011-65	s	IC MC74HC4053F
IC315	8-759-011-65	s	IC MC74HC4053F
IC316	8-759-925-90	s	IC SN74HC74NS
IC400	8-759-011-65	s	IC MC74HC4053F
IC402	8-759-946-28	s	IC TLC372CPS
IC403	8-759-603-82	s	IC M5241L
IC404	8-759-637-09	s	IC M5238FP-722
IC405	8-759-925-90	s	IC SN74HC74NS
IC406	8-759-637-09	s	IC M5238FP-722
IC407	8-759-637-09	s	IC M5238FP-722
IC408	8-759-637-09	s	IC M5238FP-722
IC409	8-759-925-73	s	IC SN74HC03NS
IC410	8-759-981-58	s	IC RC2043MD
IC411	8-759-637-09	s	IC M5238FP-722
IC412	8-759-637-09	s	IC M5238FP-722
IC413	8-759-011-65	s	IC MC74HC4053F
IC414	8-759-637-09	s	IC M5238FP-722
IC415	8-759-637-09	s	IC M5238FP-722
IC416	8-759-011-65	s	IC MC74HC4053F
IC500	8-759-637-09	s	IC M5238FP-722
IC501	8-759-637-09	s	IC M5238FP-722
IC503	8-759-011-65	s	IC MC74HC4053F
IC504	8-759-637-09	s	IC M5238FP-722
IC505	8-759-981-58	s	IC RC2043MD
IC506	8-759-637-09	s	IC M5238FP-722

NOTE : For the parts marked # in the parts list, refer to "Section 23 Changed Parts".

(AE-12 BOARD/BOARD NO. 1-639-123-11(DVR-2000/2100))

Ref. No. or Q'ty	Part No.	SP	Description
IC507	8-759-637-09	s	IC M5238FP-722
IC508	8-759-011-65	s	IC MC74HC4053F
IC509	8-759-926-44	s	IC SN74HC240ANS
IC510	8-759-941-27	s	IC MB4002PF
IC511	8-759-925-90	s	IC SN74HC74NS
IC512	8-759-925-73	s	IC SN74HC03NS
IC513	8-759-926-05	s	IC SN74HC125NS
IC514	8-759-981-58	s	IC RC2043MD
IC515	8-759-637-09	s	IC M5238FP-722
IC516	8-759-637-09	s	IC M5238FP-722
IC517	8-759-011-64	s	IC MC74HC4052F
L100	1-410-450-11	s	INDUCTOR 3.9mH
L101	1-410-450-11	s	INDUCTOR 3.9mH
L102	1-410-450-11	s	INDUCTOR 3.9mH
L103	1-410-450-11	s	INDUCTOR 3.9mH
L200	1-421-329-00	s	COIL, CHOKE
L201	1-421-329-00	s	COIL, CHOKE
L202	1-421-329-00	s	COIL, CHOKE
L203	1-421-329-00	s	COIL, CHOKE
L204	1-421-329-00	s	COIL, CHOKE
L205	1-421-329-00	s	COIL, CHOKE
L206	1-421-329-00	s	COIL, CHOKE
L207	1-421-329-00	s	COIL, CHOKE
L300	1-410-456-11	s	INDUCTOR 12mH
L301	1-410-439-11	s	INDUCTOR 470uH
L400	1-410-450-11	s	INDUCTOR 3.9mH
L401	1-410-456-11	s	INDUCTOR 12mH
L500	1-410-448-11	s	INDUCTOR 2.7mH
L501	1-410-456-11	s	INDUCTOR 12mH
LV100	1-407-284-00	s	INDUCTOR, VAR 1mH
LV101	1-407-284-00	s	INDUCTOR, VAR 1mH
LV102	1-407-282-00	s	INDUCTOR, VAR 0.47mH
LV103	1-407-286-00	s	INDUCTOR, VAR 2.2mH
LV300	1-407-286-00	s	INDUCTOR, VAR 2.2mH
LV301	1-407-286-00	s	INDUCTOR, VAR 2.2mH
LV400	1-407-289-00	s	INDUCTOR 6.8MMH
LV500	1-407-286-00	s	INDUCTOR, VAR 2.2mH
LV501	1-407-286-00	s	INDUCTOR, VAR 2.2mH
Q100	8-729-265-52	s	TRANSISTOR 2SC2655-Y
Q101	8-729-374-02	s	TRANSISTOR 2SB740
Q102	8-729-265-52	s	TRANSISTOR 2SC2655-Y
Q103	8-729-374-02	s	TRANSISTOR 2SB740
Q104	8-729-620-02	s	TRANSISTOR 2SA1115-EF
Q105	8-729-119-78	s	TRANSISTOR 2SC2785-HFE
Q106	8-729-265-52	s	TRANSISTOR 2SC2655-Y
Q107	8-729-374-02	s	TRANSISTOR 2SB740
Q108	8-729-620-02	s	TRANSISTOR 2SA1115-EF
Q109	8-729-119-78	s	TRANSISTOR 2SC2785-HFE
Q110	8-729-265-52	s	TRANSISTOR 2SC2655-Y
Q111	8-729-374-02	s	TRANSISTOR 2SB740
Q112	8-729-900-98	s	TRANSISTOR DTC143TK
Q300	8-729-265-52	s	TRANSISTOR 2SC2655-Y
Q301	8-729-265-52	s	TRANSISTOR 2SC2655-Y
Q302	8-729-374-02	s	TRANSISTOR 2SB740
Q303	8-729-374-02	s	TRANSISTOR 2SB740
Q308	8-729-900-98	s	TRANSISTOR DTC143TK
Q400	8-729-900-98	s	TRANSISTOR DTC143TK
Q402	8-729-900-98	s	TRANSISTOR DTC143TK

NOTE : Please see page 22-42 for the parts that are not listed in the parts list.

(AE-12 BOARD/BOARD NO. 1-639-123-11(DVR-2000/2100))

Ref. No. or Q'ty	Part No.	SP	Description
Q500	8-729-265-52	s	TRANSISTOR 2SC2655-Y
Q501	8-729-265-52	s	TRANSISTOR 2SC2655-Y
Q502	8-729-374-02	s	TRANSISTOR 2SB740
Q503	8-729-374-02	s	TRANSISTOR 2SB740
R101	1-216-105-00	s	METAL, CHIP 220k 5% 1/10W
R105	1-216-105-00	s	METAL, CHIP 220k 5% 1/10W
R112	1-249-387-11	s	CARBON 3.3 5% 1/4W
R113	1-249-387-11	s	CARBON 3.3 5% 1/4W
R114	1-249-381-11	s	CARBON 1 5% 1/4W
R119	1-249-387-11	s	CARBON 3.3 5% 1/4W
R120	1-249-387-11	s	CARBON 3.3 5% 1/4W
R121	1-249-381-11	s	CARBON 1 5% 1/4W
R129	1-249-387-11	s	CARBON 3.3 5% 1/4W
R130	1-249-387-11	s	CARBON 3.3 5% 1/4W
R131	1-249-381-11	s	CARBON 1 5% 1/4W
R139	1-249-387-11	s	CARBON 3.3 5% 1/4W
R140	1-249-387-11	s	CARBON 3.3 5% 1/4W
R141	1-249-381-11	s	CARBON 1 5% 1/4W
R142	1-249-387-11	s	CARBON 3.3 5% 1/4W
R251	1-216-105-00	s	METAL, CHIP 220k 5% 1/10W
R255	1-216-105-00	s	METAL, CHIP 220k 5% 1/10W
R311	1-249-391-11	s	CARBON 6.8 5% 1/4W
R312	1-249-391-11	s	CARBON 6.8 5% 1/4W
R313	1-249-391-11	s	CARBON 6.8 5% 1/4W
R314	1-249-391-11	s	CARBON 6.8 5% 1/4W
R333	1-216-121-00	s	METAL, CHIP 1M 5% 1/10W
R353	1-215-435-00	s	METAL 3.9k 1% 1/4W
R420	1-216-099-00	s	METAL, CHIP 120k 5% 1/10W
R421	1-216-101-00	s	METAL, CHIP 150k 5% 1/10W
R431	1-216-129-00	s	METAL, CHIP 2.2M 5% 1/10W
R435	1-216-113-00	s	METAL, CHIP 470k 5% 1/10W
R436	1-216-105-00	s	METAL, CHIP 220k 5% 1/10W
R445	1-216-105-00	s	METAL, CHIP 220k 5% 1/10W
R459	1-215-476-00	s	METAL 200k 1% 1/6W
R514	1-249-391-11	s	CARBON 6.8 5% 1/4W
R515	1-249-391-11	s	CARBON 6.8 5% 1/4W
R516	1-249-391-11	s	CARBON 6.8 5% 1/4W
R517	1-249-391-11	s	CARBON 6.8 5% 1/4W
R536	1-216-295-00	s	METAL, CHIP 0-OHM
R538	1-216-129-00	s	METAL, CHIP 2.2M 5% 1/10W
R568	1-216-129-00	s	METAL, CHIP 2.2M 5% 1/10W
R588	1-215-437-00	s	METAL 4.7k 1% 1/6W
R590	1-215-421-00	s	METAL 1k 1% 1/6W
RB200	1-235-005-00	s	RESISTOR BLOCK 47kx8
RB201	1-235-005-00	s	RESISTOR BLOCK 47kx8
RB202	1-235-005-00	s	RESISTOR BLOCK 47kx8
RB203	1-235-005-00	s	RESISTOR BLOCK 47kx8
RB204	1-235-359-11	s	RESISTOR BLOCK 47kx4
RB205	1-235-005-00	s	RESISTOR BLOCK 47kx8
RB206	1-235-005-00	s	RESISTOR BLOCK 47kx8
RV100	1-228-455-00	s	RES, ADJ, METAL 500
RV101	1-228-455-00	s	RES, ADJ, METAL 500
RV102	1-228-455-00	s	RES, ADJ, METAL 500
RV103	1-228-455-00	s	RES, ADJ, METAL 500
RV300	1-228-456-00	s	RES, ADJ, METAL 1k
RV301	1-228-462-00	s	RES, ADJ, METAL 100k
RV302	1-228-475-00	s	RES, ADJ, METAL 20k
RV303	1-228-475-00	s	RES, ADJ, METAL 20k

NOTE : For the parts marked # in the parts list, refer to "Section 23 Changed Parts".

(AE-12 BOARD/BOARD NO. 1-639-123-11(DVR-2000/2100))

Ref. No. or Q'ty	Part No.	SP	Description
RV400	1-228-460-00	s	RES, ADJ, METAL 20k
RV401	1-228-473-00	s	RES, ADJ, METAL 5k
RV402	1-228-458-00	s	RES, ADJ, METAL 5k
RV403	1-228-475-00	s	RES, ADJ, METAL 20k
RV404	1-228-476-00	s	METAL 158V 3.16mA 50k
RV405	1-228-462-00	s	RES, ADJ, METAL 100k
RV406	1-228-459-00	s	RES, ADJ, METAL 10k
RV500	1-228-456-00	s	RES, ADJ, METAL 1k
RV501	1-228-458-00	s	RES, ADJ, METAL 5k
RV502	1-228-456-00	s	RES, ADJ, METAL 1k
RV503	1-228-475-00	s	RES, ADJ, METAL 20k
RV504	1-228-475-00	s	RES, ADJ, METAL 20k
RV505	1-228-461-00	s	RES, ADJ, CERMET 50k
RV506	1-228-476-00	s	METAL 158V 3.16mA 50k
RV507	1-228-476-00	s	METAL 158V 3.16mA 50k
RY1	1-515-691-11	s	RELAY
T300	1-433-330-11	s	TRANSFORMER, BIAS OSCILLATION
T500	1-433-330-11	s	TRANSFORMER, BIAS OSCILLATION
TH100	1-800-200-00	s	THERMISTOR S-3K
TH101	1-800-200-00	s	THERMISTOR S-3K
TH400	1-807-749-11	s	THERMISTOR, POSITIVE, 68-OHM
TH401	1-807-749-11	s	THERMISTOR, POSITIVE, 68-OHM

NOTE : Please see page 22-42 for the parts that are not listed in the parts list.

AE-12 BOARD/BOARD NO. 1-639-123-12/-13(DVR-2000/2100)

BOARD NO. 1-639-123-12/-13
DVR-2000(J) : S/N 10101 and higher
DVR-2000(UC): S/N 10101 and higher
DVR-2000(EK): S/N 10101 and higher
DVR-2100(J) : S/N 10401 and higher
DVR-2100(UC): S/N 10401 and higher
DVR-2100(EK): S/N 10401 and higher

Ref. No. or Q'ty	Part No.	SP	Description
#1pc	A-6013-126-B	o	MOUNTED CIRCUIT BOARD, AE-12
4pcs	7-682-948-01	s	SCREW, +PSW 3x8
2pcs	3-673-249-11	o	LEVER, PC BOARD
2pcs	7-626-320-11	s	PIN, SPRING 3X8
6pcs	7-685-547-14	s	SCREW, +BVTP 3x10 TYPE2 N-S
1pc	3-171-894-21	o	LABEL (V), SERIAL NUMBER
C100	1-163-127-00	s	CERAMIC, CHIP 270PF 5% 50V
C101	1-130-475-00	s	MYLAR 0.0022uF 5% 50V
C102	1-130-483-00	s	MYLAR 0.01uF 5% 50V
C105	1-131-349-00	s	TANTALUM 2.2uF 10% 35V
C106	1-130-475-00	s	MYLAR 0.0022uF 5% 50V
C107	1-130-483-00	s	MYLAR 0.01uF 5% 50V
#C108	1-126-514-11	s	ELECT 22uF 20% 16V
#C109	1-126-514-11	s	ELECT 22uF 20% 16V
C110	1-131-349-00	s	TANTALUM 2.2uF 10% 35V
C111	1-164-161-11	s	CERAMIC, CHIP 0.0022uF 10% 100V
C112	1-163-133-00	s	CERAMIC, CHIP 470pF 5% 50V
C113	1-163-135-00	s	CERAMIC, CHIP 560pF 5% 50V
C114	1-131-360-00	s	TANTALUM 15uF 20% 25V
C117	1-109-561-00	s	MICA 0.001uF 5% 100V
C118	1-131-360-00	s	TANTALUM 15uF 20% 25V
C119	1-164-161-11	s	CERAMIC, CHIP 0.0022uF 10% 100V
C120	1-163-133-00	s	CERAMIC, CHIP 470pF 5% 50V
C121	1-163-135-00	s	CERAMIC, CHIP 560pF 5% 50V
#C122	1-126-514-11	s	ELECT 22uF 20% 16V
#C123	1-126-514-11	s	ELECT 22uF 20% 16V
C124	1-109-561-00	s	MICA 0.001uF 5% 100V
C125	1-131-360-00	s	TANTALUM 15uF 20% 25V
C126	1-164-232-11	s	CERAMIC, CHIP 0.01uF 10% 100V
C127	1-163-133-00	s	CERAMIC, CHIP 470pF 5% 50V
C128	1-163-135-00	s	CERAMIC, CHIP 560pF 5% 50V
#C129	1-163-514-11	s	CERAMIC, CHIP 200pF 5% 50V
#C130	1-163-514-11	s	CERAMIC, CHIP 200pF 5% 50V
C131	1-164-232-11	s	CERAMIC, CHIP 0.01uF 10% 100V
C132	1-164-232-11	s	CERAMIC, CHIP 0.01uF 10% 100V
C133	1-109-637-00	s	MICA 0.001uF 2% 500V
#C136	1-163-033-00	s	CERAMIC, CHIP 0.022uF 50V
#C137	1-163-033-00	s	CERAMIC, CHIP 0.022uF 50V
C138	1-163-127-00	s	CERAMIC, CHIP 270pF 5% 50V
C139	1-131-360-00	s	TANTALUM 15uF 20% 25V
C140	1-164-232-11	s	CERAMIC, CHIP 0.01uF 10% 100V
C141	1-163-133-00	s	CERAMIC, CHIP 470pF 5% 50V
C142	1-163-135-00	s	CERAMIC, CHIP 560pF 5% 50V
C143	1-163-124-00	s	CERAMIC, CHIP 200pF 5% 50V
C144	1-163-124-00	s	CERAMIC, CHIP 200pF 5% 50V
#C145	1-126-514-11	s	ELECT 22uF 20% 16V
#C146	1-126-514-11	s	ELECT 22uF 20% 16V
C147	1-164-232-11	s	CERAMIC, CHIP 0.01uF 10% 100V
C148	1-164-232-11	s	CERAMIC, CHIP 0.01uF 10% 100V
C149	1-109-638-00	s	MICA 0.0012uF 2% 500V
#C150	1-109-542-00	s	MICA 220pF 5% 100V

NOTE : For the parts marked # in the parts list, refer to "Section 23 Changed Parts".

(AE-12 BOARD/BOARD NO. 1-639-123-12/-13(DVR-2000/2100)

Ref. No. or Q'ty	Part No.	SP	Description
#C151	1-109-621-00	s	MICA 220pF 1% 500V
#C200	1-126-935-11	s	ELECT 470uF 20% 16V
#C201	1-126-935-11	s	ELECT 470uF 20% 16V
#C202	1-163-033-00	s	CERAMIC, CHIP 0.022uF 50V
#C203	1-126-935-11	s	ELECT 470uF 20% 16V
#C204	1-126-935-11	s	ELECT 470uF 20% 16V
#C205	1-163-033-00	s	CERAMIC, CHIP 0.022uF 50V
#C206	1-126-935-11	s	ELECT 470uF 20% 16V
#C207	1-126-935-11	s	ELECT 470uF 20% 16V
#C208	1-163-033-00	s	CERAMIC, CHIP 0.022uF 50V
#C210	1-126-514-11	s	ELECT 22uF 20% 16V
#C211	1-126-935-11	s	ELECT 470uF 20% 16V
#C212	1-126-935-11	s	ELECT 470uF 20% 16V
#C213	1-163-033-00	s	CERAMIC, CHIP 0.022uF 50V
#C215	1-126-514-11	s	ELECT 22uF 20% 16V
C216	1-163-033-00	s	CERAMIC, CHIP 0.022uF 50V
C217	1-163-033-00	s	CERAMIC, CHIP 0.022uF 50V
C218	1-163-033-00	s	CERAMIC, CHIP 0.022uF 50V
C219	1-163-033-00	s	CERAMIC, CHIP 0.022uF 50V
C220	1-163-033-00	s	CERAMIC, CHIP 0.022uF 50V
C221	1-163-033-00	s	CERAMIC, CHIP 0.022uF 50V
C222	1-163-033-00	s	CERAMIC, CHIP 0.022uF 50V
C223	1-163-033-00	s	CERAMIC, CHIP 0.022uF 50V
C224	1-163-033-00	s	CERAMIC, CHIP 0.022uF 50V
C225	1-163-033-00	s	CERAMIC, CHIP 0.022uF 50V
C226	1-163-033-00	s	CERAMIC, CHIP 0.022uF 50V
C227	1-163-033-00	s	CERAMIC, CHIP 0.022uF 50V
C228	1-163-033-00	s	CERAMIC, CHIP 0.022uF 50V
C229	1-163-033-00	s	CERAMIC, CHIP 0.022uF 50V
C230	1-163-033-00	s	CERAMIC, CHIP 0.022uF 50V
C231	1-163-033-00	s	CERAMIC, CHIP 0.022uF 50V
C232	1-163-033-00	s	CERAMIC, CHIP 0.022uF 50V
C233	1-163-033-00	s	CERAMIC, CHIP 0.022uF 50V
C234	1-163-033-00	s	CERAMIC, CHIP 0.022uF 50V
C250	1-163-127-00	s	CERAMIC, CHIP 270pF 5% 50V
C251	1-130-483-00	s	MYLAR 0.01uF 5% 50V
#C252	1-126-514-11	s	ELECT 22uF 20% 16V
#C253	1-126-514-11	s	ELECT 22uF 20% 16V
C254	1-131-349-00	s	TANTALUM 2.2uF 10% 35V
C255	1-163-127-00	s	CERAMIC, CHIP 270pF 5% 50V
C256	1-130-475-00	s	MYLAR 0.0022uF 5% 50V
C257	1-130-483-00	s	MYLAR 0.01uF 5% 50V
C260	1-131-349-00	s	TANTALUM 2.2uF 10% 35V
C261	1-163-033-00	s	CERAMIC, CHIP 0.022uF 50V
C262	1-163-033-00	s	CERAMIC, CHIP 0.022uF 50V
C263	1-163-033-00	s	CERAMIC, CHIP 0.022uF 50V
C264	1-163-033-00	s	CERAMIC, CHIP 0.022uF 50V
C265	1-163-033-00	s	CERAMIC, CHIP 0.022uF 50V
C266	1-163-033-00	s	CERAMIC, CHIP 0.022uF 50V
C267	1-163-033-00	s	CERAMIC, CHIP 0.022uF 50V
C268	1-163-033-00	s	CERAMIC, CHIP 0.022uF 50V
C269	1-163-033-00	s	CERAMIC, CHIP 0.022uF 50V
C270	1-163-033-00	s	CERAMIC, CHIP 0.022uF 50V
C271	1-163-033-00	s	CERAMIC, CHIP 0.022uF 50V
C274	1-130-475-00	s	MYLAR 0.0022uF 5% 50V
#C300	1-126-514-11	s	ELECT 22uF 20% 16V
#C301	1-126-514-11	s	ELECT 22uF 20% 16V
C302	1-131-360-00	s	TANTALUM 15uF 20% 25V
C303	1-164-161-11	s	CERAMIC, CHIP 0.0022uF 10% 100V

NOTE : Please see page 22-42 for the parts that are not listed in the parts list.

(AE-12 BOARD/BOARD NO. 1-639-123-12/-13(DVR-2000/2100)

Ref. No. or Q'ty	Part No.	SP	Description
C304	1-163-133-00	s	CERAMIC, CHIP 470pF 5% 50V
C305	1-163-251-11	s	CERAMIC, CHIP 100pF 5% 50V
#C308	1-126-514-11	s	ELECT 22uF 20% 16V
#C309	1-126-514-11	s	ELECT 22uF 20% 16V
C310	1-161-900-11	s	CERAMIC 1uF 50V
C311	1-161-900-11	s	CERAMIC 1uF 50V
C312	1-161-900-11	s	CERAMIC 1uF 50V
C313	1-109-627-00	s	MICA 150pF 2% 500V
#C314	1-126-514-11	s	ELECT 22uF 20% 16V
C315	1-131-360-00	s	TANTALUM 15uF 20% 25V
C316	1-130-475-00	s	MYLAR 0.0022uF 5% 50V
C317	1-130-495-00	s	MYLAR 0.1uF 5% 50V
C318	1-161-900-11	s	CERAMIC 1uF 50V
#C319	1-107-599-11	s	MICA 27pF 5% 500V
#C323	1-126-514-11	s	ELECT 22uF 20% 16V
#C324	1-126-514-11	s	ELECT 22uF 20% 16V
C325	1-131-395-00	s	TANTALUM 100uF 10% 3.15V
C326	1-162-768-11	s	CERAMIC 0.0018uF 5% 50V
C327	1-162-774-11	s	CERAMIC 0.0056 5% 50V
C328	1-130-479-00	s	MYLAR 0.0047uF 5% 50V
#C329	1-126-514-11	s	ELECT 22uF 20% 16V
C330	1-124-589-11	s	ELECT 47uF 20% 16V
#C331	1-126-514-11	s	ELECT 22uF 20% 16V
#C332	1-126-514-11	s	ELECT 22uF 20% 16V
#C333	1-163-033-00	s	CERAMIC, CHIP 0.022uF 50V
#C334	1-163-033-00	s	CERAMIC, CHIP 0.022uF 50V
#C335	1-126-514-11	s	ELECT 22uF 20% 16V
#C336	1-126-514-11	s	ELECT 22uF 20% 16V
C337	1-163-275-11	s	CERAMIC, CHIP 0.001uF 5% 50V
#C338	1-126-514-11	s	ELECT 22uF 20% 16V
C349	1-163-275-11	s	CERAMIC, CHIP 0.001uF 5% 50V
C402	1-131-360-00	s	TANTALUM 15uF 20% 25V
C404	1-163-125-00	s	CERAMIC, CHIP 220pF 5% 50V
C405	1-131-347-00	s	TANTALUM 1uF 10% 35V
C407	1-126-933-11	s	ELECT 100uF 20% 16V
#C408	1-126-514-11	s	ELECT 22uF 20% 16V
#C409	1-126-514-11	s	ELECT 22uF 20% 16V
C410	1-131-347-00	s	TANTALUM 1uF 10% 35V
#C411	1-126-514-11	s	ELECT 22uF 20% 16V
C412	1-131-360-00	s	TANTALUM 15uF 20% 25V
C413	1-164-161-11	s	CERAMIC, CHIP 0.0022uF 10% 100V
C414	1-163-133-00	s	CERAMIC, CHIP 470pF 5% 50V
C415	1-163-135-00	s	CERAMIC, CHIP 560pF 5% 50V
#C416	1-126-514-11	s	ELECT 22uF 20% 16V
#C417	1-126-514-11	s	ELECT 22uF 20% 16V
C418	1-161-900-11	s	CERAMIC 1uF 50V
C419	1-109-549-00	s	MICA 390pF 5% 100V
C420	1-109-619-00	s	MICA 180pF 1% 500V
C424	1-163-137-00	s	CERAMIC, CHIP 680pF 5% 50V
C425	1-130-475-00	s	MYLAR 0.0022uF 5% 50V
C426	1-162-735-11	s	CERAMIC 0.0012uF 1% 50V
C427	1-162-776-31	s	CERAMIC 0.0082uF 5% 50V
#C428	1-126-514-11	s	ELECT 22uF 20% 16V
#C429	1-126-514-11	s	ELECT 22uF 20% 16V
C430	1-163-275-11	s	CERAMIC, CHIP 0.001uF 5% 50V
C431	1-161-900-11	s	CERAMIC 1uF 50V
#C435	1-126-514-11	s	ELECT 22uF 20% 16V
#C436	1-126-514-11	s	ELECT 22uF 20% 16V
C437	1-131-395-00	s	TANTALUM 100uF 10% 3.15V

NOTE : For the parts marked # in the parts list, refer to "Section 23 Changed Parts".

(AE-12 BOARD/BOARD NO. 1-639-123-12/-13(DVR-2000/2100))

Ref. No. or Q'ty	Part No.	SP	Description
C438	1-130-477-00	s	MYLAR 0.0033uF 5% 50V
C439	1-163-275-11	s	CERAMIC, CHIP 0.001uF 5% 50V
C440	1-163-121-00	s	CERAMIC, CHIP 150pF 5% 50V
#C441	1-126-514-11	s	ELECT 22uF 20% 16V
C442	1-163-014-00	s	CERAMIC 0.0027uF 10% 50V
#C443	1-126-514-11	s	ELECT 22uF 20% 16V
C444	1-164-232-11	s	CERAMIC, CHIP 0.01uF 10% 100V
C445	1-164-232-11	s	CERAMIC, CHIP 0.01uF 10% 100V
C446	1-163-275-11	s	CERAMIC, CHIP 0.001uF 5% 50V
C447	1-163-122-00	s	CERAMIC 160pF 5% 50V
C448	1-131-347-00	s	TANTALUM 1uF 10% 35V
C449	1-126-933-11	s	ELECT 100uF 20% 16V
C450	1-163-275-11	s	CERAMIC, CHIP 0.001uF 5% 50V
C451	1-131-349-00	s	TANTALUM 2.2uF 10% 35V
#C452	1-126-514-11	s	ELECT 22uF 20% 16V
#C453	1-126-514-11	s	ELECT 22uF 20% 16V
C454	1-131-360-00	s	TANTALUM 15uF 20% 25V
C455	1-131-349-00	s	TANTALUM 2.2uF 10% 35V
#C456	1-126-514-11	s	ELECT 22uF 20% 16V
#C457	1-126-514-11	s	ELECT 22uF 20% 16V
#C458	1-126-514-11	s	ELECT 22uF 20% 16V
#C459	1-126-514-11	s	ELECT 22uF 20% 16V
C467	1-130-491-00	s	MYLAR 0.047uF 5% 50V
#C500	1-126-514-11	s	ELECT 22uF 20% 16V
#C501	1-126-514-11	s	ELECT 22uF 20% 16V
C502	1-131-343-00	s	TANTALUM 0.22uF 10% 35V
C503	1-130-491-00	s	MYLAR 0.047uF 5% 50V
C504	1-161-900-11	s	CERAMIC 1uF 50V
C505	1-131-360-00	s	TANTALUM 15uF 20% 25V
C506	1-164-161-11	s	CERAMIC, CHIP 0.0022uF 10% 100V
C507	1-163-133-00	s	CERAMIC, CHIP 470pF 5% 50V
C508	1-163-251-11	s	CERAMIC, CHIP 100pF 5% 50V
#C511	1-126-514-11	s	ELECT 22uF 20% 16V
#C512	1-126-514-11	s	ELECT 22uF 20% 16V
C513	1-161-900-11	s	CERAMIC 1uF 50V
C514	1-161-900-11	s	CERAMIC 1uF 50V
C515	1-161-900-11	s	CERAMIC 1uF 50V
C516	1-109-627-00	s	MICA 150pF 2% 500V
#C517	1-107-599-11	s	MICA 27pF 5% 500V
C518	1-131-360-00	s	TANTALUM 15uF 20% 25V
C522	1-130-495-00	s	MYLAR 0.1uF 5% 50V
C523	1-161-900-11	s	CERAMIC 1uF 50V
#C529	1-126-514-11	s	ELECT 22uF 20% 16V
#C530	1-126-514-11	s	ELECT 22uF 20% 16V
#C533	1-126-514-11	s	ELECT 22uF 20% 16V
C534	1-130-493-00	s	MYLAR 0.068uF 5% 50V
#C535	1-126-514-11	s	ELECT 22uF 20% 16V
#C536	1-126-514-11	s	ELECT 22uF 20% 16V
#C537	1-126-514-11	s	ELECT 22uF 20% 16V
C538	1-163-263-11	s	CERAMIC, CHIP 330pF 5% 50V
C539	1-164-182-11	s	CERAMIC CHIP 3300pF 10% 100V
C540	1-164-182-11	s	CERAMIC CHIP 3300pF 10% 100V
C541	1-163-011-11	s	CERAMIC 0.0015uF 10% 50V
#C542	1-126-514-11	s	ELECT 22uF 20% 16V
C545	1-131-349-00	s	TANTALUM 2.2uF 10% 35V
C547	1-163-235-11	s	CERAMIC, CHIP 22pF 5% 50V
#C548	1-126-514-11	s	ELECT 22uF 20% 16V
C549	1-124-589-11	s	ELECT 47uF 20% 16V
#C550	1-126-514-11	s	ELECT 22uF 20% 16V
#C551	1-126-514-11	s	ELECT 22uF 20% 16V

NOTE : Please see page 22-42 for the parts that are not listed in the parts list.

(AE-12 BOARD/BOARD NO. 1-639-123-12/-13(DVR-2000/2100))

Ref. No. or Q'ty	Part No.	SP	Description
#C552	1-163-033-00	s	CERAMIC, CHIP 0.022uF 50V
#C553	1-126-514-11	s	ELECT 22uF 20% 16V
#C554	1-126-514-11	s	ELECT 22uF 20% 16V
#C556	1-163-033-00	s	CERAMIC, CHIP 0.022uF 50V
#C557	1-163-033-00	s	CERAMIC, CHIP 0.022uF 50V
#C561	1-126-514-11	s	ELECT 22uF 20% 16V
#C562	1-126-514-11	s	ELECT 22uF 20% 16V
#C563	1-126-514-11	s	ELECT 22uF 20% 16V
C564	1-131-395-00	s	TANTALUM 100uF 10% 3.15V
C565	1-162-768-11	s	CERAMIC 0.0018uF 5% 50V
C566	1-162-774-11	s	CERAMIC 0.0056 5% 50V
#C567	1-126-514-11	s	ELECT 22uF 20% 16V
#C568	1-126-514-11	s	ELECT 22uF 20% 16V
#C569	1-126-514-11	s	ELECT 22uF 20% 16V
C570	1-163-263-11	s	CERAMIC, CHIP 330pF 5% 50V
C571	1-164-182-11	s	CERAMIC CHIP 3300pF 10% 100V
C572	1-163-011-11	s	CERAMIC 0.0015uF 10% 50V
#C573	1-163-033-00	s	CERAMIC, CHIP 0.022uF 50V
#C574	1-163-033-00	s	CERAMIC, CHIP 0.022uF 50V
#C575	1-126-514-11	s	ELECT 22uF 20% 16V
C576	1-131-349-00	s	TANTALUM 2.2uF 10% 35V
C578	1-163-275-11	s	CERAMIC, CHIP 0.001uF 5% 50V
C580	1-164-182-11	s	CERAMIC CHIP 3300pF 10% 100V
C581	1-163-235-11	s	CERAMIC, CHIP 22pF 5% 50V
C584	1-162-768-11	s	CERAMIC 0.0018uF 5% 50V
#C585	1-126-514-11	s	ELECT 22uF 20% 16V
C586	1-131-360-00	s	TANTALUM 15uF 20% 25V
C587	1-163-235-11	s	CERAMIC, CHIP 22pF 5% 50V
C601	1-131-360-00	s	TANTALUM 15uF 20% 25V
#C603	1-126-514-11	s	ELECT 22uF 20% 16V
#C604	1-126-514-11	s	ELECT 22uF 20% 16V
#C607	1-126-514-11	s	ELECT 22uF 20% 16V
#C608	1-126-514-11	s	ELECT 22uF 20% 16V
C609	1-131-395-00	s	TANTALUM 100uF 10% 3.15V
CN707	1-506-748-11	s	CONNECTOR, DIN 96P, MALE
CN708	1-506-746-11	s	CONNECTOR, DIN 48P, MALE
CN709	1-506-746-11	s	CONNECTOR, DIN 48P, MALE
D100	8-719-800-76	s	DIODE 1SS226
D101	8-719-800-76	s	DIODE 1SS226
D102	8-719-800-76	s	DIODE 1SS226
D300	8-719-800-76	s	DIODE 1SS226
D303	8-719-017-07	s	DIODE 02DZ5.6-TPH3
D304	8-719-017-07	s	DIODE 02DZ5.6-TPH3
D305	8-719-400-35	s	LED LN35BP, GRN
D400	8-719-800-76	s	DIODE 1SS226
D401	8-719-800-76	s	DIODE 1SS226
D404	8-719-800-76	s	DIODE 1SS226
D405	8-719-800-76	s	DIODE 1SS226
D500	8-719-800-76	s	DIODE 1SS226
D501	8-719-911-19	s	DIODE 1SS119
D502	8-719-911-19	s	DIODE 1SS119
D504	8-719-400-35	s	LED LN35BP, GRN
D600	8-719-800-76	s	DIODE 1SS226
D601	8-719-911-19	s	DIODE 1SS119
IC100	8-759-926-44	s	IC SN74HC240ANS
IC101	8-759-637-09	s	IC M5238FP
IC102	8-759-637-09	s	IC M5238FP
IC103	1-567-794-11	s	OSCILLATOR, CRYSTAL 14.31818MHz

NOTE : For the parts marked # in the parts list, refer to "Section 23 Changed Parts".

(AE-12 BOARD/BOARD NO. 1-639-123-12/-13(DVR-2000/2100))

Ref. No. or Q'ty	Part No.	SP	Description
IC104	1-577-540-11	s	OSCILLATOR, CRYSTAL 17.734476MHz
IC105	8-759-637-09	s	IC M5238FP
IC106	8-759-925-73	s	IC SN74HC03NS
IC107	8-759-637-09	s	IC M5238FP
IC108	8-759-637-09	s	IC M5238FP
IC109	8-759-925-90	s	IC SN74HC74NS
IC110	8-759-113-77	s	IC UPD5201G
IC111	8-759-637-09	s	IC M5238FP
IC112	8-759-637-09	s	IC M5238FP
IC113	8-759-926-23	s	IC SN74HC163NS
IC114	8-759-926-23	s	IC SN74HC163NS
IC115	8-759-925-90	s	IC SN74HC74NS
IC116	8-759-926-44	s	IC SN74HC240ANS
#IC201	8-759-708-06	s	IC NJM78L06A
IC203	8-759-982-45	s	IC RC79L06A
IC204	8-759-926-49	s	IC SN74HC245NS
IC205	8-759-926-48	s	IC SN74HC244NS
IC207	8-759-926-44	s	IC SN74HC240ANS
IC208	8-759-938-68	s	IC CXD1095Q
IC210	8-759-926-44	s	IC SN74HC240ANS
IC211	8-759-926-44	s	IC SN74HC240ANS
IC300	8-759-637-09	s	IC M5238FP
IC303	8-759-925-73	s	IC SN74HC03NS
IC304	8-759-926-65	s	IC SN74HC368NS
IC305	8-759-927-06	s	IC SN74HCT240ANS
IC306	8-759-926-44	s	IC SN74HC240ANS
IC307	8-759-926-44	s	IC SN74HC240ANS
IC308	8-759-637-09	s	IC M5238FP
IC309	8-759-941-27	s	IC MB4002PF
IC310	8-759-637-09	s	IC M5238FP
IC311	1-567-795-11	s	OSCILLATOR, CRYSTAL 14.500MHz
IC312	8-759-503-11	s	IC CXD8167Q
IC313	8-759-637-09	s	IC M5238FP
IC314	8-759-011-65	s	IC MC74HC4053F
IC315	8-759-011-65	s	IC MC74HC4053F
IC316	8-759-925-90	s	IC SN74HC74NS
IC402	8-759-946-28	s	IC TLC372CPS
IC403	8-759-603-82	s	IC M5241L
IC404	8-759-637-09	s	IC M5238FP
IC405	8-759-925-90	s	IC SN74HC74NS
IC406	8-759-637-09	s	IC M5238FP
IC407	8-759-637-09	s	IC M5238FP
IC408	8-759-637-09	s	IC M5238FP
IC409	8-759-925-73	s	IC SN74HC03NS
IC410	8-759-981-58	s	IC RC2043MD
IC411	8-759-637-09	s	IC M5238FP
IC412	8-759-637-09	s	IC M5238FP
IC413	8-759-011-65	s	IC MC74HC4053F
IC414	8-759-637-09	s	IC M5238FP
IC415	8-759-637-09	s	IC M5238FP
IC416	8-759-011-65	s	IC MC74HC4053F
IC500	8-759-637-09	s	IC M5238FP
IC501	8-759-637-09	s	IC M5238FP
IC504	8-759-637-09	s	IC M5238FP
IC505	8-759-981-58	s	IC RC2043MD
IC506	8-759-637-09	s	IC M5238FP
IC507	8-759-637-09	s	IC M5238FP
IC508	8-759-011-65	s	IC MC74HC4053F
IC509	8-759-927-06	s	IC SN74HCT240ANS

NOTE : Please see page 22-42 for the parts that are not listed in the parts list.

(AE-12 BOARD/BOARD NO. 1-639-123-12/-13(DVR-2000/2100))

Ref. No. or Q'ty	Part No.	SP	Description
IC510	8-759-941-27	s	IC MB4002PF
IC511	8-759-925-90	s	IC SN74HC74NS
IC512	8-759-925-73	s	IC SN74HC03NS
IC514	8-759-981-58	s	IC RC2043MD
IC515	8-759-637-09	s	IC M5238FP
IC516	8-759-637-09	s	IC M5238FP
IC517	8-759-637-09	s	IC M5238FP
IC600	8-759-637-09	s	IC M5238FP
IC601	8-759-637-09	s	IC M5238FP
IC602	8-759-603-82	s	IC M5241L
JP1	1-566-388-11	s	CONNECTOR 8P, MALE
JP2	1-566-388-11	s	CONNECTOR 8P, MALE
#JP3	1-566-388-11	s	CONNECTOR 8P, MALE
#JP4	1-566-388-11	s	CONNECTOR 8P, MALE
JS1	1-563-859-11	s	PLUG, SHORTING
#JS2	1-563-859-11	s	PLUG, SHORTING
L100	1-410-450-11	s	INDUCTOR 3.9mH
L101	1-410-450-11	s	INDUCTOR 3.9mH
L102	1-410-450-11	s	INDUCTOR 3.9mH
L103	1-410-450-11	s	INDUCTOR 3.9mH
L200	1-421-329-00	s	COIL, CHOKE
L201	1-421-329-00	s	COIL, CHOKE
L202	1-421-329-00	s	COIL, CHOKE
L203	1-421-329-00	s	COIL, CHOKE
L204	1-421-329-00	s	COIL, CHOKE
L205	1-421-329-00	s	COIL, CHOKE
L206	1-421-329-00	s	COIL, CHOKE
L207	1-421-329-00	s	COIL, CHOKE
L300	1-410-456-11	s	INDUCTOR 12mH
L301	1-410-439-11	s	INDUCTOR 470uH
L400	1-410-450-11	s	INDUCTOR 3.9mH
L401	1-410-456-11	s	INDUCTOR 12mH
L500	1-410-448-11	s	INDUCTOR 2.7mH
L501	1-410-456-11	s	INDUCTOR 12mH
LV100	1-407-284-00	s	INDUCTOR, VAR 1mH
LV101	1-407-284-00	s	INDUCTOR, VAR 1mH
LV102	1-407-282-00	s	INDUCTOR, VAR 0.47mH
LV103	1-407-286-00	s	INDUCTOR, VAR 2.2mH
LV300	1-407-286-00	s	INDUCTOR, VAR 2.2mH
LV301	1-407-286-00	s	INDUCTOR, VAR 2.2mH
LV400	1-407-289-00	s	INDUCTOR 6.8MMH
LV500	1-407-286-00	s	INDUCTOR, VAR 2.2mH
LV501	1-407-286-00	s	INDUCTOR, VAR 2.2mH
Q100	8-729-265-52	s	TRANSISTOR 2SC2655-Y
Q101	8-729-374-02	s	TRANSISTOR 2SB740
Q102	8-729-265-52	s	TRANSISTOR 2SC2655-Y
Q103	8-729-374-02	s	TRANSISTOR 2SB740
Q104	8-729-620-02	s	TRANSISTOR 2SA1115-EF
Q105	8-729-119-78	s	TRANSISTOR 2SC2785-HFE
Q106	8-729-265-52	s	TRANSISTOR 2SC2655-Y
Q107	8-729-374-02	s	TRANSISTOR 2SB740
Q108	8-729-620-02	s	TRANSISTOR 2SA1115-EF
Q109	8-729-119-78	s	TRANSISTOR 2SC2785-HFE
Q110	8-729-265-52	s	TRANSISTOR 2SC2655-Y
Q111	8-729-374-02	s	TRANSISTOR 2SB740
Q112	8-729-900-98	s	TRANSISTOR DTC143TK
Q300	8-729-265-52	s	TRANSISTOR 2SC2655-Y
Q301	8-729-265-52	s	TRANSISTOR 2SC2655-Y

NOTE : For the parts marked # in the parts list, refer to "Section 23 Changed Parts".

(AE-12 BOARD/BOARD NO. 1-639-123-12/-13(DVR-2000/2100))

Ref. No. or Q'ty	Part No.	SP	Description
Q302	8-729-374-02	s	TRANSISTOR 2SB740
Q303	8-729-374-02	s	TRANSISTOR 2SB740
Q400	8-729-900-98	s	TRANSISTOR DTC143TK
Q500	8-729-265-52	s	TRANSISTOR 2SC2655-Y
Q501	8-729-265-52	s	TRANSISTOR 2SC2655-Y
Q502	8-729-374-02	s	TRANSISTOR 2SB740
Q503	8-729-374-02	s	TRANSISTOR 2SB740
R101	1-216-105-00	s	METAL, CHIP 220k 5% 1/10W
R105	1-216-105-00	s	METAL, CHIP 220k 5% 1/10W
#R109	1-216-045-00	s	METAL, CHIP 680 5% 1/10W
R112	1-249-387-11	s	CARBON 3.3 5% 1/4W
R113	1-249-387-11	s	CARBON 3.3 5% 1/4W
R114	1-249-381-11	s	CARBON 1 5% 1/4W
#R116	1-216-045-00	s	METAL, CHIP 680 5% 1/10W
R119	1-249-387-11	s	CARBON 3.3 5% 1/4W
R120	1-249-387-11	s	CARBON 3.3 5% 1/4W
R121	1-249-381-11	s	CARBON 1 5% 1/4W
#R125	1-216-053-00	s	METAL, CHIP 1.5k 5% 1/10W
#R126	1-216-045-00	s	METAL, CHIP 680 5% 1/10W
#R127	1-216-045-00	s	METAL, CHIP 680 5% 1/10W
#R128	1-216-053-00	s	METAL, CHIP 1.5k 5% 1/10W
R129	1-249-387-11	s	CARBON 3.3 5% 1/4W
R130	1-249-387-11	s	CARBON 3.3 5% 1/4W
R131	1-249-381-11	s	CARBON 1 5% 1/4W
#R135	1-216-053-00	s	METAL, CHIP 1.5k 5% 1/10W
#R136	1-216-045-00	s	METAL, CHIP 680 5% 1/10W
#R137	1-216-045-00	s	METAL, CHIP 680 5% 1/10W
#R138	1-216-053-00	s	METAL, CHIP 1.5k 5% 1/10W
R139	1-249-387-11	s	CARBON 3.3 5% 1/4W
R140	1-249-387-11	s	CARBON 3.3 5% 1/4W
R141	1-249-381-11	s	CARBON 1 5% 1/4W
R142	1-249-387-11	s	CARBON 3.3 5% 1/4W
#R200	1-216-089-00	s	METAL, CHIP 47k 5% 1/10W
R251	1-216-105-00	s	METAL, CHIP 220k 5% 1/10W
R255	1-216-105-00	s	METAL, CHIP 220k 5% 1/10W
#R306	1-216-025-00	s	METAL, CHIP 100 5% 1/10W
#R307	1-216-025-00	s	METAL, CHIP 100 5% 1/10W
#R308	1-216-025-00	s	METAL, CHIP 100 5% 1/10W
#R309	1-216-025-00	s	METAL, CHIP 100 5% 1/10W
R311	1-249-391-11	s	CARBON 6.8 5% 1/4W
R312	1-249-391-11	s	CARBON 6.8 5% 1/4W
R313	1-249-391-11	s	CARBON 6.8 5% 1/4W
R314	1-249-391-11	s	CARBON 6.8 5% 1/4W
R333	1-216-121-00	s	METAL, CHIP 1M 5% 1/10W
#R353	1-216-063-00	s	METAL, CHIP 3.9k 5% 1/10W
#R410	1-216-089-00	s	METAL, CHIP 47k 5% 1/10W
R420	1-216-099-00	s	METAL, CHIP 120k 5% 1/10W
R421	1-216-101-00	s	METAL, CHIP 150k 5% 1/10W
R431	1-216-129-00	s	METAL, CHIP 2.2M 5% 1/10W
R435	1-216-113-00	s	METAL, CHIP 470k 5% 1/10W
R436	1-216-105-00	s	METAL, CHIP 220k 5% 1/10W
R445	1-216-105-00	s	METAL, CHIP 220k 5% 1/10W
#R452	1-216-025-00	s	METAL, CHIP 100 5% 1/10W
#R453	1-216-025-00	s	METAL, CHIP 100 5% 1/10W
#R455	1-216-025-00	s	METAL, CHIP 100 5% 1/10W
#R500	1-216-025-00	s	METAL, CHIP 100 5% 1/10W
#R501	1-216-053-00	s	METAL, CHIP 1.5k 5% 1/10W
#R509	1-216-025-00	s	METAL, CHIP 100 5% 1/10W

NOTE : Please see page 22-42 for the parts that are not listed in the parts list.

(AE-12 BOARD/BOARD NO. 1-639-123-12/-13(DVR-2000/2100))

Ref. No. or Q'ty	Part No.	SP	Description
#R510	1-216-025-00	s	METAL, CHIP 100 5% 1/10W
#R511	1-216-025-00	s	METAL, CHIP 100 5% 1/10W
#R512	1-216-025-00	s	METAL, CHIP 100 5% 1/10W
R514	1-249-391-11	s	CARBON 6.8 5% 1/4W
R515	1-249-391-11	s	CARBON 6.8 5% 1/4W
R516	1-249-391-11	s	CARBON 6.8 5% 1/4W
R517	1-249-391-11	s	CARBON 6.8 5% 1/4W
R538	1-216-129-00	s	METAL, CHIP 2.2M 5% 1/10W
#R554	1-216-025-00	s	METAL, CHIP 100 5% 1/10W
#R558	1-216-025-00	s	METAL, CHIP 100 5% 1/10W
R568	1-216-129-00	s	METAL, CHIP 2.2M 5% 1/10W
#R606	1-216-043-00	s	METAL, CHIP 560 5% 1/10W
RB200	1-235-005-00	s	RESISTOR BLOCK 47kx8
RB201	1-235-005-00	s	RESISTOR BLOCK 47kx8
RB202	1-235-005-00	s	RESISTOR BLOCK 47kx8
RB203	1-235-005-00	s	RESISTOR BLOCK 47kx8
RB204	1-231-549-11	s	RESISTOR BLOCK 47kx4
RB205	1-235-005-00	s	RESISTOR BLOCK 47kx8
RB206	1-235-005-00	s	RESISTOR BLOCK 47kx8
RV100	1-228-455-00	s	RES, ADJ METAL 500
RV101	1-228-455-00	s	RES, ADJ METAL 500
RV102	1-228-455-00	s	RES, ADJ METAL 500
RV103	1-228-455-00	s	RES, ADJ METAL 500
RV300	1-228-456-00	s	RES, ADJ METAL 1k
RV302	1-228-475-00	s	RES, ADJ METAL 20k
RV400	1-228-459-00	s	RES, ADJ METAL 10k
RV401	1-228-473-00	s	RES, ADJ METAL 5k
RV402	1-228-458-00	s	RES, ADJ METAL 5k
RV403	1-228-460-00	s	RES, ADJ METAL 20k
RV404	1-228-476-00	s	RES, ADJ METAL 50k
RV405	1-228-462-00	s	RES, ADJ METAL 100k
RV406	1-228-459-00	s	RES, ADJ METAL 10k
RV500	1-228-456-00	s	RES, ADJ METAL 1k
RV501	1-228-458-00	s	RES, ADJ METAL 5k
RV502	1-228-456-00	s	RES, ADJ METAL 1k
RV503	1-228-475-00	s	RES, ADJ METAL 20k
RV505	1-228-461-00	s	RES, ADJ CERMET 50k
RV506	1-228-476-00	s	RES, ADJ METAL 50k
RV507	1-228-461-00	s	RES, ADJ CERMET 50k
RV508	1-228-460-00	s	RES, ADJ METAL 20k
RV509	1-228-460-00	s	RES, ADJ METAL 20k
RV601	1-228-462-00	s	RES, ADJ METAL 100k
RV602	1-228-460-00	s	RES, ADJ METAL 20k
RV603	1-228-460-00	s	RES, ADJ METAL 20k
RY1	1-515-691-11	s	RELAY
T300	1-433-330-11	s	TRANSFORMER, BIAS OSCILLATION
T500	1-433-330-11	s	TRANSFORMER, BIAS OSCILLATION
TH100	1-800-200-00	s	THERMISTOR S-3K
TH101	1-800-200-00	s	THERMISTOR S-3K
TH400	1-807-749-11	s	THERMISTOR, POSITIVE, 68-OHM
TH401	1-807-749-11	s	THERMISTOR, POSITIVE, 68-OHM

NOTE : For the parts marked # in the parts list, refer to "Section 23 Changed Parts".

AH-24 BOARD(DVR-2000/2100)

Ref. No. or Q'ty	Part No.	SP	Description
1pc	1-639-139-11	o	PRINTED CIRCUIT BOARD, AH-24
1pc	8-825-770-12	s	HEAD, AUDIO EPS288-5803
CN1M	1-506-471-11	o	CONNECTOR 6P, MALE
CN2M	1-506-467-11	o	CONNECTOR 2P, MALE
CN3M	1-506-467-11	o	CONNECTOR 2P, MALE
CN4M	1-506-467-11	o	CONNECTOR 2P, MALE

AH-33 BOARD(DVR-2000/2100)

Ref. No. or Q'ty	Part No.	SP	Description
1pc	1-639-138-11	o	PRINTED CIRCUIT BOARD, AH-33
1pc	8-825-770-01	s	HEAD FE
CN391M	1-506-481-11	o	CONNECTOR 2P, MALE

ASW-21 BOARD(DVR-2000/2100)

Ref. No. or Q'ty	Part No.	SP	Description
1pc	1-639-130-11	o	PRINTED CIRCUIT BOARD, ASW-21
CN935	1-565-282-11	o	CONNECTOR, XLR 3P, FEMALE
CN936	1-565-282-11	o	CONNECTOR, XLR 3P, FEMALE
CN937	1-565-282-11	o	CONNECTOR, XLR 3P, FEMALE
CN938	1-565-282-11	o	CONNECTOR, XLR 3P, FEMALE
CN939	1-565-281-11	o	CONNECTOR, XLR 3P, MALE
CN940	1-565-281-11	o	CONNECTOR, XLR 3P, MALE
CN941	1-565-281-11	o	CONNECTOR, XLR 3P, MALE
CN942	1-565-281-11	o	CONNECTOR, XLR 3P, MALE
CN943	1-565-281-11	o	CONNECTOR, XLR 3P, MALE
CN944	1-565-281-11	o	CONNECTOR, XLR 3P, MALE
CN945	1-565-281-11	o	CONNECTOR, XLR 3P, MALE
CN946	1-565-281-11	o	CONNECTOR, XLR 3P, MALE
CN947	1-566-569-11	o	CONNECTOR, TX 60P, FEMALE

NOTE : Please see page 22-42 for the parts that are not listed in the parts list.

ASW-22 BOARD(DVR-2000/2100)

Ref. No. or Q'ty	Part No.	SP	Description
1pc	A-6021-017-A	o	MOUNTED CIRCUIT BOARD, ASW-22
C1	1-124-234-00	s	ELECT 22uF 20% 16V
C2	1-124-234-00	s	ELECT 22uF 20% 16V
C101	1-136-192-11	s	FILM 0.33uF 5% 250
C102	1-136-192-11	s	FILM 0.33uF 5% 250
C103	1-136-192-11	s	FILM 0.33uF 5% 250
C104	1-136-192-11	s	FILM 0.33uF 5% 250
C105	1-136-192-11	s	FILM 0.33uF 5% 250
C106	1-136-192-11	s	FILM 0.33uF 5% 250
C107	1-136-192-11	s	FILM 0.33uF 5% 250
C108	1-136-192-11	s	FILM 0.33uF 5% 250
C109	1-136-192-11	s	FILM 0.33uF 5% 250
C110	1-136-192-11	s	FILM 0.33uF 5% 250
C111	1-136-192-11	s	FILM 0.33uF 5% 250
C112	1-136-192-11	s	FILM 0.33uF 5% 250
C113	1-101-880-00	s	CERAMIC 47pF 5% 50V
C114	1-101-880-00	s	CERAMIC 47pF 5% 50V
C115	1-101-880-00	s	CERAMIC 47pF 5% 50V
C116	1-101-880-00	s	CERAMIC 47pF 5% 50V
C117	1-101-880-00	s	CERAMIC 47pF 5% 50V
C118	1-101-880-00	s	CERAMIC 47pF 5% 50V
C119	1-101-880-00	s	CERAMIC 47pF 5% 50V
C120	1-101-880-00	s	CERAMIC 47pF 5% 50V
C121	1-162-806-11	s	CERAMIC 0.1uF 10% 50V
C122	1-162-806-11	s	CERAMIC 0.1uF 10% 50V
C201	1-136-192-11	s	FILM 0.33uF 5% 250
C202	1-136-192-11	s	FILM 0.33uF 5% 250
C203	1-136-192-11	s	FILM 0.33uF 5% 250
C204	1-136-192-11	s	FILM 0.33uF 5% 250
C205	1-136-192-11	s	FILM 0.33uF 5% 250
C206	1-136-192-11	s	FILM 0.33uF 5% 250
C207	1-136-192-11	s	FILM 0.33uF 5% 250
C208	1-136-192-11	s	FILM 0.33uF 5% 250
C209	1-136-192-11	s	FILM 0.33uF 5% 250
C210	1-136-192-11	s	FILM 0.33uF 5% 250
C211	1-136-192-11	s	FILM 0.33uF 5% 250
C212	1-136-192-11	s	FILM 0.33uF 5% 250
C213	1-101-880-00	s	CERAMIC 47pF 5% 50V
C214	1-101-880-00	s	CERAMIC 47pF 5% 50V
C215	1-101-880-00	s	CERAMIC 47pF 5% 50V
C216	1-101-880-00	s	CERAMIC 47pF 5% 50V
C217	1-101-880-00	s	CERAMIC 47pF 5% 50V
C218	1-101-880-00	s	CERAMIC 47pF 5% 50V
C219	1-101-880-00	s	CERAMIC 47pF 5% 50V
C220	1-101-880-00	s	CERAMIC 47pF 5% 50V
C221	1-162-806-11	s	CERAMIC 0.1uF 10% 50V
C222	1-162-806-11	s	CERAMIC 0.1uF 10% 50V
C301	1-136-192-11	s	FILM 0.33uF 5% 250
C302	1-136-192-11	s	FILM 0.33uF 5% 250
C303	1-136-192-11	s	FILM 0.33uF 5% 250
C304	1-136-192-11	s	FILM 0.33uF 5% 250
C305	1-136-192-11	s	FILM 0.33uF 5% 250
C306	1-136-192-11	s	FILM 0.33uF 5% 250
C307	1-136-192-11	s	FILM 0.33uF 5% 250
C308	1-136-192-11	s	FILM 0.33uF 5% 250
C309	1-136-192-11	s	FILM 0.33uF 5% 250
C310	1-136-192-11	s	FILM 0.33uF 5% 250
C311	1-136-192-11	s	FILM 0.33uF 5% 250

NOTE : For the parts marked # in the parts list, refer to "Section 23 Changed Parts".

(ASW-22 BOARD(DVR-2000/2100))

Ref. No. or Q'ty	Part No.	SP	Description
C312	1-136-192-11	s	FILM 0.33uF 5% 250
C313	1-101-880-00	s	CERAMIC 47pF 5% 50V
C314	1-101-880-00	s	CERAMIC 47pF 5% 50V
C315	1-101-880-00	s	CERAMIC 47pF 5% 50V
C316	1-101-880-00	s	CERAMIC 47pF 5% 50V
C317	1-101-880-00	s	CERAMIC 47pF 5% 50V
C318	1-101-880-00	s	CERAMIC 47pF 5% 50V
C319	1-101-880-00	s	CERAMIC 47pF 5% 50V
C320	1-101-880-00	s	CERAMIC 47pF 5% 50V
C321	1-162-806-11	s	CERAMIC 0.1uF 10% 50V
C322	1-162-806-11	s	CERAMIC 0.1uF 10% 50V
CN947	1-573-510-11	o	CONNECTOR, TX 60P, MALE
CN951	1-569-214-11	s	CONNECTOR, HEADDER, TX-3 40P, MALE
IC101	8-759-518-61	s	IC SN74S1057SC
IC102	8-759-926-31	s	IC AM26LS31PC
IC103	8-759-926-32	s	IC AM26LS32PC
IC201	8-759-518-61	s	IC SN74S1057SC
IC202	8-759-926-32	s	IC AM26LS32PC
IC203	8-759-926-31	s	IC AM26LS31PC
IC301	8-759-518-61	s	IC SN74S1057SC
IC302	8-759-926-31	s	IC AM26LS31PC
IC303	8-759-926-32	s	IC AM26LS32PC
L1	1-421-370-00	s	COIL, CHOKE
R101	1-214-681-00	s	METAL 10 1% 1/4W
R102	1-214-681-00	s	METAL 10 1% 1/4W
R103	1-214-681-00	s	METAL 10 1% 1/4W
R104	1-214-681-00	s	METAL 10 1% 1/4W
R105	1-214-681-00	s	METAL 10 1% 1/4W
R106	1-214-681-00	s	METAL 10 1% 1/4W
R107	1-214-681-00	s	METAL 10 1% 1/4W
R108	1-214-681-00	s	METAL 10 1% 1/4W
R201	1-215-398-00	s	METAL 110 1% 1/6W
R202	1-214-705-00	s	METAL 100 1% 1/4W
R203	1-214-705-00	s	METAL 100 1% 1/4W
R204	1-215-398-00	s	METAL 110 1% 1/6W
R205	1-214-705-00	s	METAL 100 1% 1/4W
R206	1-214-705-00	s	METAL 100 1% 1/4W
R207	1-215-398-00	s	METAL 110 1% 1/6W
R208	1-214-705-00	s	METAL 100 1% 1/4W
R209	1-214-705-00	s	METAL 100 1% 1/4W
R210	1-215-398-00	s	METAL 110 1% 1/6W
R211	1-214-705-00	s	METAL 100 1% 1/4W
R212	1-214-705-00	s	METAL 100 1% 1/4W
R301	1-214-681-00	s	METAL 10 1% 1/4W
R302	1-214-681-00	s	METAL 10 1% 1/4W
R303	1-214-681-00	s	METAL 10 1% 1/4W
R304	1-214-681-00	s	METAL 10 1% 1/4W
R305	1-214-681-00	s	METAL 10 1% 1/4W
R306	1-214-681-00	s	METAL 10 1% 1/4W
R307	1-214-681-00	s	METAL 10 1% 1/4W
R308	1-214-681-00	s	METAL 10 1% 1/4W
T1	1-437-194-21	s	TRANSFORMER, PULSE
T2	1-437-194-21	s	TRANSFORMER, PULSE
T3	1-437-194-21	s	TRANSFORMER, PULSE
T4	1-437-194-21	s	TRANSFORMER, PULSE
T5	1-437-194-21	s	TRANSFORMER, PULSE

NOTE : Please see page 22-42 for the parts that are not listed in the parts list.

(ASW-22 BOARD(DVR-2000/2100))

Ref. No. or Q'ty	Part No.	SP	Description
T6	1-437-194-21	s	TRANSFORMER, PULSE
T7	1-437-194-21	s	TRANSFORMER, PULSE
T8	1-437-194-21	s	TRANSFORMER, PULSE
T9	1-437-194-21	s	TRANSFORMER, PULSE
T10	1-437-194-21	s	TRANSFORMER, PULSE
T11	1-437-194-21	s	TRANSFORMER, PULSE
T12	1-437-194-21	s	TRANSFORMER, PULSE

NOTE : For the parts marked # in the parts list, refer to "Section 23 Changed Parts".

AU-133 BOARD/BOARD NO. 1-639-118-11(DVR-2000/2100)

Ref. No. or Q'ty	Part No.	SP	Description
BOARD NO. 1-639-118-11			
DVR-2000(J) : S/N 10001 thru 10099			
DVR-2000(UC): S/N 10001 thru 10099			
DVR-2000(EK): S/N 10001 thru 10099			
DVR-2100(J) : S/N 10001 thru 10399			
DVR-2100(UC): S/N 10001 thru 10399			
DVR-2100(EK): S/N 10001 thru 10399			
#1pc	A-6019-045-A	o	MOUNTED CIRCUIT BOARD, AU-133
8pcs	1-526-653-21	s	SOCKET, IC (DP) 14P
24pcs	1-526-656-00	o	SOCKET, IC (DP) 20P
3pcs	1-526-659-00	o	SOCKET, IC 28P
5pcs	1-526-816-21	o	SOCKET, IC (DP) 24P
2pcs	1-540-083-11	s	SOCKET, IC (PGA) 89P
1pc	1-540-086-11	s	SOCKET, IC (PGA)
1pc	3-171-895-41	o	LABEL (P), SERIAL NUMBER
1pc	3-172-038-01	o	LABEL (1), SERIAL NUMBER,AU-133
2pcs	3-714-634-01	o	LEVER, PC BOARD
2pcs	7-626-320-11	s	PIN, SPRING 3X8
9pcs	7-682-948-01	s	SCREW, +PSW 3x8
4pcs	7-685-547-14	s	SCREW, +BVTP 3x10 TYPE2 N-S
C1	1-162-806-11	s	CERAMIC 0.1uF 10% 50V
C2	1-130-471-00	s	MYLAR 0.001uF 5% 50V
C3	1-131-351-00	s	TANTALUM 4.7uF 10% 35V
C4	1-131-347-00	s	TANTALUM 1uF 10% 35V
C5	1-162-806-11	s	CERAMIC 0.1uF 10% 50V
C6	1-124-570-11	s	ELECT 220uF 20% 16V
C7	1-124-570-11	s	ELECT 220uF 20% 16V
C8	1-162-712-11	s	CERAMIC 120pF 1% 50V
CN505M	1-565-207-21	s	CONNECTOR, DIN 128P, MALE
CN506M	1-565-207-21	s	CONNECTOR, DIN 128P, MALE
D1	8-719-400-35	s	LED LN35BP, GRN
D2	8-719-400-35	s	LED LN35BP, GRN
D3	8-719-404-07	s	LED LN45YP, AMBER
D4	8-719-404-07	s	LED LN45YP, AMBER
D5	8-719-800-60	s	LED TLR214, RED
D6	8-719-800-60	s	LED TLR214, RED
ICB1	8-759-904-87	s	IC 74F374PC
ICB2	8-759-074-05	s	IC 16V8-AU13313-3, PLD
ICB4	8-759-917-05	s	IC SN74HC541N
ICB5	8-759-917-05	s	IC SN74HC541N
ICB6	8-759-917-06	s	IC SN74HC574N
ICB7	8-759-921-34	s	IC SN74HC245N
ICB8	8-759-917-05	s	IC SN74HC541N
ICB9	8-759-916-96	s	IC SN74HC374N
ICB10	8-759-902-40	s	IC SN74LS240N
ICB12	8-759-917-06	s	IC SN74HC574N
ICB13	8-759-926-32	s	IC AM26LS32PC
ICB14	8-759-917-05	s	IC SN74HC541N
ICB15	8-759-945-30	s	IC SN75ALS194N
ICB16	8-759-917-06	s	IC SN74HC574N
ICB17	8-759-945-30	s	IC SN75ALS194N
ICB18	8-759-945-30	s	IC SN75ALS194N
ICB19	8-759-917-05	s	IC SN74HC541N
ICB3A	8-759-926-32	s	IC AM26LS32PC
ICB3B	8-759-917-05	s	IC SN74HC541N
ICB11A	8-759-903-74	s	IC SN74LS374N
ICB11B	8-759-926-32	s	IC AM26LS32PC

NOTE : Please see page 22-42 for the parts that are not listed in the parts list.

(AU-133 BOARD/BOARD NO. 1-639-118-11(DVR-2000/2100))

Ref. No. or Q'ty	Part No.	SP	Description
ICC1	8-759-904-87	s	IC 74F374PC
ICC3	8-759-519-97	s	IC CXD8305G
ICC5	8-759-916-46	s	IC SN74HC139N
ICC6	8-759-973-43	s	IC MB8421-90LPFQ
ICC8	8-759-973-43	s	IC MB8421-90LPFQ
ICC10	8-759-902-44	s	IC SN74LS244N
ICC11	8-759-902-40	s	IC SN74LS240N
ICC12	8-759-917-06	s	IC SN74HC574N
ICC13	8-759-916-42	s	IC SN74HC133N
ICC14	8-759-916-22	s	IC SN74HC21N
ICC15	8-759-916-42	s	IC SN74HC133N
ICC16	8-759-556-64	s	IC 16V8-AU13314-1, PLD
ICC17	8-759-147-02	s	IC UPD42101C-3
ICC18	8-759-917-06	s	IC SN74HC574N
ICC19	8-759-558-25	s	IC 7C235-AU13305-1, EPROM
ICD1	8-759-916-12	s	IC SN74HC00N
ICD3	8-759-519-97	s	IC CXD8305G
ICD6	8-759-916-50	s	IC SN74HC157N
ICD7	8-759-074-18	s	IC 7C225-AU13304-2, EPROM
ICD8	8-759-558-26	s	IC 7C245-AU13307-1, EPROM
ICD9	8-759-558-27	s	IC 7C245-AU13308-1, EPROM
ICD10	8-759-902-40	s	IC SN74LS240N
ICD11	8-759-912-48	s	IC SN74ALS874NT
ICD12	8-759-917-06	s	IC SN74HC574N
ICD13	8-759-074-06	s	IC 16V8-AU13315-2, PLD
ICD14	8-759-147-02	s	IC UPD42101C-3
ICD15	8-759-233-43	s	IC TC74HC595AP
ICD16	8-759-074-07	s	IC 16V8-AU13316-3, PLD
ICD17	8-759-074-07	s	IC 16V8-AU13316-3, PLD
ICD18	8-759-556-64	s	IC 16V8-AU13314-1, PLD
ICD19	8-759-903-74	s	IC SN74LS374N
ICD5A	8-759-916-14	s	IC SN74HC04N
ICD5B	8-759-916-25	s	IC SN74HC32N
ICE1	8-752-306-51	s	IC CX23065A
ICE5	8-759-916-53	s	IC SN74HC166N
ICE6	8-759-903-99	s	IC SN74LS399N
ICE7	8-752-304-30	s	IC CX23043
ICE8	8-752-304-30	s	IC CX23043
ICE9	8-759-556-61	s	IC 5032DC-AU13309-1, PLD
ICE10	8-759-902-40	s	IC SN74LS240N
ICE11	8-759-233-43	s	IC TC74HC595AP
ICE12	8-759-517-87	s	IC CXD8093Q
ICE14	8-759-233-05	s	IC TC74HC283AP
ICE15	8-759-074-08	s	IC 16V8-AU13317-3, PLD
ICE16	8-759-916-50	s	IC SN74HC157N
ICE17	8-759-917-06	s	IC SN74HC574N
ICE18	8-759-916-07	s	IC CX23038
ICF2	8-759-921-17	s	IC MC74HC153N
ICF4	8-759-916-16	s	IC MC74HC08AN
ICF5	8-759-916-53	s	IC SN74HC166N
ICF6	8-759-921-08	s	IC SN74HC02N
ICF10	8-759-916-16	s	IC MC74HC08AN
ICF11	8-759-917-06	s	IC SN74HC574N
ICF12	8-759-917-06	s	IC SN74HC574N
ICF13	8-759-917-06	s	IC SN74HC574N
ICF14	8-759-918-33	s	IC CX20160
ICF15	8-759-233-05	s	IC TC74HC283AP

NOTE : For the parts marked # in the parts list, refer to "Section 23 Changed Parts".

(AU-133 BOARD/BOARD NO. 1-639-118-11(DVR-2000/2100))

Ref. No. or Q'ty	Part No.	SP	Description
ICF16	8-759-916-50	s	IC SN74HC157N
ICF17	8-759-916-50	s	IC SN74HC157N
ICF3A	8-759-921-10	s	IC SN74HC86N
ICF3B	8-759-916-19	s	IC SN74HC11N
ICG1	8-759-904-80	s	IC 74F04PC
ICG3	8-759-518-10	s	IC CXD8253G
ICG5	8-759-916-53	s	IC SN74HC166N
ICG8	8-759-973-43	s	IC MB8421-90LPFQ
ICG9	8-759-921-21	s	IC SN74HC163N
ICG10	8-759-916-25	s	IC SN74HC32N
ICG11	8-759-916-16	s	IC MC74HC08AN
ICG12	8-759-918-33	s	IC CX20160
ICG13	8-759-074-09	s	IC 16V8-AU13318-1, PLD
ICG14	8-759-918-33	s	IC CX20160
ICG15	8-759-903-99	s	IC SN74LS399N
ICG16	8-759-916-50	s	IC SN74HC157N
ICG17	8-759-917-06	s	IC SN74HC574N
ICG18	8-759-916-07	s	IC CX23038
ICG6A	8-759-916-16	s	IC MC74HC08AN
ICG6B	8-759-921-21	s	IC SN74HC163N
ICH1	8-759-903-74	s	IC SN74LS374N
ICH5	8-759-916-53	s	IC SN74HC166N
ICH6	8-759-921-21	s	IC SN74HC163N
ICH7	8-759-921-21	s	IC SN74HC163N
ICH8	8-759-074-19	s	IC 7C235-AU13306-2, PROM
ICH9	8-752-304-30	s	IC CX23043
ICH11	8-759-518-16	s	IC CXD8246Q
ICH12	8-759-918-33	s	IC CX20160
ICH13	8-759-074-11	s	IC 16V8-AU13320-1, PLD
ICH14	8-759-903-99	s	IC SN74LS399N
ICH15	8-759-916-14	s	IC SN74HC04N
ICH16	8-759-916-50	s	IC SN74HC157N
ICH17	8-759-916-50	s	IC SN74HC157N
ICH18	8-759-916-50	s	IC SN74HC157N
ICJ1	8-759-074-10	s	IC 16V8-AU13319-2, PLD
ICJ2	8-759-912-48	s	IC SN74ALS874NT
ICJ3	8-759-912-48	s	IC SN74ALS874NT
ICJ4	8-759-912-48	s	IC SN74ALS874NT
ICJ5	8-759-912-48	s	IC SN74ALS874NT
ICJ6	8-759-001-23	s	IC MC74HC109N
ICJ7	8-759-916-12	s	IC SN74HC00N
ICJ16	8-759-147-02	s	IC UPD42101C-3
ICJ18	8-759-946-64	s	IC SN74ALS04BN
ICK1	8-759-921-17	s	IC MC74HC153N
ICK2	8-759-074-12	s	IC 16V8-AU13321-3, PLD
ICK3	8-759-074-12	s	IC 16V8-AU13321-3, PLD
ICK4	8-759-074-12	s	IC 16V8-AU13321-3, PLD
ICK5	8-759-074-12	s	IC 16V8-AU13321-3, PLD
ICK6	8-752-327-75	s	IC CXK58258SP-45
ICK8	---PENDING--	s	IC CXD8253AG
ICK11	8-752-328-01	s	IC CXK51256P-55
ICK12	8-759-074-23	s	IC 5032DC-AU13341-1, PLD
ICK14	8-759-518-08	s	IC CXD8201Q
ICK16	8-759-918-33	s	IC CX20160
ICK17	8-759-916-50	s	IC SN74HC157N
ICK18	8-759-074-13	s	IC 16V8-AU13322-6, PLD
ICK19	8-752-304-30	s	IC CX23043

NOTE : Please see page 22-42 for the parts that are not listed in the parts list.

(AU-133 BOARD/BOARD NO. 1-639-118-11(DVR-2000/2100))

Ref. No. or Q'ty	Part No.	SP	Description
ICL1	8-759-912-48	s	IC SN74ALS874NT
ICL2	8-759-921-21	s	IC SN74HC163N
ICL3	8-759-921-21	s	IC SN74HC163N
ICL4	8-759-921-21	s	IC SN74HC163N
ICL5	8-759-921-21	s	IC SN74HC163N
ICL16	8-759-518-14	s	IC CXD8248Q
ICL18	8-759-921-17	s	IC MC74HC153N
ICL19	8-752-304-30	s	IC CX23043
ICM1	8-752-304-30	s	IC CX23043
ICM2	8-759-916-12	s	IC SN74HC00N
ICM3	8-759-517-87	s	IC CXD8093Q
ICM5	8-759-912-48	s	IC SN74ALS874NT
ICM7	8-759-518-09	s	IC CXD8273Q
ICM11	8-759-518-08	s	IC CXD8201Q
ICM14	8-759-518-08	s	IC CXD8201Q
ICM16	8-759-518-16	s	IC CXD8246Q
ICM18	8-759-078-64	s	IC 27C512F-AU13302-3, EPROM
ICM19	8-759-078-65	s	IC 27C512F-AU13303-2, EPROM
ICN1	8-759-074-04	s	IC 27C512-AU13301-5, EPROM
ICN2	8-759-916-53	s	IC SN74HC166N
ICN3	8-759-916-53	s	IC SN74HC166N
ICN4	8-759-916-14	s	IC SN74HC04N
ICN6	8-759-147-02	s	IC UPD42101C-3
ICN7	8-759-518-71	s	IC TMS4C1060-40SD
ICN8	8-759-518-71	s	IC TMS4C1060-40SD
ICN9	8-759-518-71	s	IC TMS4C1060-40SD
ICN5A	8-759-556-62	s	IC 5032DC-AU13310-1, PLD
ICP1	8-759-917-43	s	IC SN74HC138N
ICP2	8-759-074-14	s	IC 16V8-AU13323-2, PLD
ICP3	8-759-917-05	s	IC SN74HC541N
ICP4	8-759-917-05	s	IC SN74HC541N
ICP10	8-759-518-14	s	IC CXD8248Q
ICP11	8-759-912-48	s	IC SN74ALS874NT
ICP12	8-759-518-71	s	IC TMS4C1060-40SD
ICP13	8-759-518-71	s	IC TMS4C1060-40SD
ICP15	8-759-916-14	s	IC SN74HC04N
ICP16	8-759-518-08	s	IC CXD8201Q
ICP18	8-759-917-06	s	IC SN74HC574N
ICP19	8-759-917-06	s	IC SN74HC574N
ICP14A	8-759-518-71	s	IC TMS4C1060-40SD
ICP14B	8-759-518-71	s	IC TMS4C1060-40SD
ICR2	8-752-304-30	s	IC CX23043
ICR4	8-759-007-09	s	IC MC74HC540N
ICR8	8-759-007-09	s	IC MC74HC540N
ICR10	8-759-518-14	s	IC CXD8248Q
ICR11	8-759-912-48	s	IC SN74ALS874NT
ICR14	8-759-518-11	s	IC CXD8252Q
ICR16	8-759-518-08	s	IC CXD8201Q
ICR18	8-752-333-48	s	IC CXK5464AP-35
ICR20	8-759-903-74	s	IC SN74LS374N
L1	1-460-085-11	s	COIL, CHOKE 6.8UH
L2	1-460-085-11	s	COIL, CHOKE 6.8UH
L3	1-410-509-11	s	INDUCTOR 10uH
L4	1-410-509-11	s	INDUCTOR 10uH
R1	1-215-469-00	s	METAL 100k 1% 1/6W
R2	1-215-469-00	s	METAL 100k 1% 1/6W
R3	1-215-437-00	s	METAL 4.7k 1% 1/6W
R4	1-215-461-00	s	METAL 47k 1% 1/6W

NOTE : For the parts marked # in the parts list, refer to "Section 23 Changed Parts".

(AU-133 BOARD/BOARD NO. 1-639-118-11(DVR-2000/2100))

Ref. No. or Q'ty	Part No.	SP	Description
R28	1-215-373-31	s	METAL 10 1% 1/6W
R29	1-215-373-31	s	METAL 10 1% 1/6W
R30	1-215-373-31	s	METAL 10 1% 1/6W
R37	1-215-373-31	s	METAL 10 1% 1/6W
R38	1-215-373-31	s	METAL 10 1% 1/6W
R39	1-215-373-31	s	METAL 10 1% 1/6W
R40	1-215-373-31	s	METAL 10 1% 1/6W
R41	1-215-373-31	s	METAL 10 1% 1/6W
R44	1-215-373-31	s	METAL 10 1% 1/6W
R45	1-215-373-31	s	METAL 10 1% 1/6W
R46	1-215-373-31	s	METAL 10 1% 1/6W
R47	1-215-373-31	s	METAL 10 1% 1/6W
R48	1-215-373-31	s	METAL 10 1% 1/6W
R49	1-215-373-31	s	METAL 10 1% 1/6W
R50	1-215-373-31	s	METAL 10 1% 1/6W
R52	1-215-407-00	s	METAL 270 1% 1/6W
R53	1-215-407-00	s	METAL 270 1% 1/6W
RB1	1-235-005-00	s	RESISTOR BLOCK 47kx8
RB2	1-235-005-00	s	RESISTOR BLOCK 47kx8
RB3	1-235-005-00	s	RESISTOR BLOCK 47kx8
RB4	1-235-005-00	s	RESISTOR BLOCK 47kx8
RB5	1-235-005-00	s	RESISTOR BLOCK 47kx8
RB6	1-235-005-00	s	RESISTOR BLOCK 47kx8
RB7	1-235-005-00	s	RESISTOR BLOCK 47kx8
RB8	1-231-399-00	s	RESISTOR BLOCK 330x8
RB9	1-235-005-00	s	RESISTOR BLOCK 47kx8
RB10	1-235-005-00	s	RESISTOR BLOCK 47kx8
RB11	1-235-005-00	s	RESISTOR BLOCK 47kx8
RB12	1-231-410-00	s	RESISTOR BLOCK 10kx8
RB13	1-235-005-00	s	RESISTOR BLOCK 47kx8
RB14	1-235-359-11	s	RESISTOR BLOCK 47kx4
RB15	1-235-005-00	s	RESISTOR BLOCK 47kx8
X1	1-577-595-11	s	VCO, CRYSTAL 18.432000MHz

NOTE : Please see page 22-42 for the parts that are not listed in the parts list.

AU-133 BOARD/BOARD NO. 1-639-118-12/-13(DVR-2000/2100)

Ref. No. or Q'ty	Part No.	SP	Description
BOARD NO. 1-639-118-12/-13			
	DVR-2000(J) : S/N 10101 and higher		
	DVR-2000(UC): S/N 10101 and higher		
	DVR-2000(EK): S/N 10101 and higher		
	DVR-2100(J) : S/N 10401 and higher		
	DVR-2100(UC): S/N 10401 and higher		
	DVR-2100(EK): S/N 10401 and higher		
#1pc	A-6019-045-B	o	MOUNTED CIRCUIT BOARD, AU-133
2pcs	1-540-083-11	s	SOCKET, IC (PGA) 89P
1pc	1-540-086-11	s	SOCKET, IC (PGA) 179P
2pcs	1-563-859-11	s	CONNECTOR,28P
1pc	3-171-895-41	o	LABEL (P), SERIAL NUMBER
1pc	3-172-038-02	o	LABEL (1),SERIAL NUMBER,AU-133
2pcs	3-714-634-01	o	LEVER, PC BOARD
2pcs	4-914-895-01	s	FOOT, RUBBER
2pcs	7-626-320-11	s	PIN, SPRING 3X8
9pcs	7-682-948-01	s	SCREW, +PSW 3x8
4pcs	7-685-547-14	s	SCREW, +BVTP 3x10 TYPE2 N-S
C1	1-162-806-11	s	CERAMIC 0.1uF 10% 50V
C2	1-130-471-00	s	MYLAR 0.001uF 5% 50V
C3	1-131-351-00	s	TANTALUM 4.7uF 10% 35V
C4	1-131-347-00	s	TANTALUM 1uF 10% 35V
C5	1-162-806-11	s	CERAMIC 0.1uF 10% 50V
C6	1-124-570-11	s	ELECT 220uF 20% 16V
C7	1-124-570-11	s	ELECT 220uF 20% 16V
C8	1-162-712-11	s	CERAMIC 120PF 1% 50V
#C190	1-162-712-11	s	CERAMIC 120PF 1% 50V
CN1	1-566-388-11	s	CONNECTOR 8P, MALE
CN2	1-566-388-11	s	CONNECTOR 8P, MALE
CN3	1-566-388-11	s	CONNECTOR 8P, MALE
CN4	1-566-388-11	s	CONNECTOR 8P, MALE
CN505	1-565-207-21	s	CONNECTOR, DIN 128P, MALE
CN506	1-565-207-21	s	CONNECTOR, DIN 128P, MALE
D1	8-719-400-35	s	LED LN35BP, GRN
D2	8-719-400-35	s	LED LN35BP, GRN
D3	8-719-404-07	s	LED LN45YP, AMBER
D4	8-719-404-07	s	LED LN45YP, AMBER
D5	8-719-820-12	s	LED TLR224, RED
D6	8-719-820-12	s	LED TLR224, RED
ICB1	8-759-904-87	s	IC 74F374PC
ICB2	8-759-074-24	s	IC 22V10-AU13328-2, PLD
ICB4	8-759-917-05	s	IC SN74HC541N
ICB5	8-759-917-05	s	IC SN74HC541N
ICB6	8-759-917-06	s	IC SN74HC574N
ICB7	8-759-921-34	s	IC SN74HC245N
ICB8	8-759-917-05	s	IC SN74HC541N
ICB9	8-759-916-96	s	IC SN74HC374AN
ICB10	8-759-902-40	s	IC SN74LS240N
ICB12	8-759-917-06	s	IC SN74HC574N
ICB13	8-759-926-32	s	IC AM26LS32PC
ICB14	8-759-917-05	s	IC SN74HC541N
ICB15	8-759-945-30	s	IC SN75ALS194N
ICB16	8-759-917-06	s	IC SN74HC574N
ICB17	8-759-945-30	s	IC SN75ALS194N
ICB18	8-759-945-30	s	IC SN75ALS194N
ICB3A	8-759-926-32	s	IC AM26LS32PC

NOTE : For the parts marked # in the parts list, refer to "Section 23 Changed Parts".

(AU-133 BOARD/BOARD NO. 1-639-118-12/-13(DVR-2000/2100))

Ref. No. or Q'ty	Part No.	SP	Description
ICB3B	8-759-917-05	s	IC SN74HC541N
ICB11A	8-759-903-74	s	IC SN74LS374N
ICB11B	8-759-926-32	s	IC AM26LS32PC
ICB19A	8-759-917-05	s	IC SN74HC541N
ICB19B	8-759-903-74	s	IC SN74LS374N
ICC1	8-759-904-87	s	IC 74F374PC
ICC3	8-759-276-96	s	IC CXD8305AG
ICC5	8-759-282-04	s	IC PC74HC139N
ICC6	8-759-973-43	s	IC MB8421-90LPFQ
ICC8	8-759-973-43	s	IC MB8421-90LPFQ
ICC10	8-759-902-44	s	IC SN74LS244N
ICC11	8-759-902-40	s	IC SN74LS240N
ICC12	8-759-917-06	s	IC SN74HC574N
ICC13	8-759-004-65	s	IC MC74HC133N
ICC14	8-759-916-22	s	IC SN74HC21N
ICC15	8-759-004-65	s	IC MC74HC133N
ICC16	8-759-074-25	s	IC 22V10-AU13329-1, PLD
ICC17	8-759-147-02	s	IC UPD42101C-3
ICC18	8-759-917-06	s	IC SN74HC574N
ICC19	8-759-074-84	o	IC 7C235-AU13325-2, PROM
ICD1	8-759-916-12	s	IC SN74HC00N
ICD3	8-759-276-96	s	IC CXD8305AG
ICD6	8-759-916-50	s	IC SN74HC157N
ICD7	8-759-074-18	s	IC 7C225-AU13304-2, PROM
ICD8	8-759-558-26	s	IC 7C245-AU13307-1, EPROM
ICD9	8-759-558-27	s	IC 7C245-AU13308-1, EPROM
ICD10	8-759-902-40	s	IC SN74LS240N
ICD12	8-759-917-06	s	IC SN74HC574N
ICD13	8-759-074-26	s	IC 22V10-AU13330-1, PLD
ICD14	8-759-147-02	s	IC UPD42101C-3
ICD15	8-759-233-43	s	IC TC74HC595AP
ICD16	8-759-074-27	s	IC 22V10-AU13331-1, PLD
ICD17	8-759-074-27	s	IC 22V10-AU13331-1, PLD
ICD18	8-759-074-25	s	IC 22V10-AU13329-1, PLD
ICD19	8-759-916-53	s	IC SN74HC166N
ICD5A	8-759-916-14	s	IC SN74HC04N
ICD5B	8-759-916-25	s	IC SN74HC32AN
ICE1	8-752-306-51	s	IC CX23065A
ICE5	8-759-916-53	s	IC SN74HC166N
ICE6	8-759-903-99	s	IC SN74LS399N
ICE7	8-759-357-15	s	IC CXD2343S
ICE8	8-759-357-15	s	IC CXD2343S
ICE9	8-759-081-89	o	IC 5032PC-AU13309-1, PLD
ICE10	8-759-902-40	s	IC SN74LS240N
ICE11	8-759-233-43	s	IC TC74HC595AP
ICE12	8-759-517-87	s	IC CXD8093Q
ICE14	8-759-233-05	s	IC TC74HC283AP
ICE15	8-759-074-28	s	IC 22V10-AU13332-2, PLD
ICE16	8-759-916-50	s	IC SN74HC157N
ICE17	8-759-917-06	s	IC SN74HC574N
ICE18	8-759-916-07	s	IC CX23038
ICF2	8-759-921-17	s	IC MC74HC153N
ICF4	8-759-916-16	s	IC MC74HC08AN
ICF5	8-759-916-53	s	IC SN74HC166N
ICF6	8-759-921-08	s	IC SN74HC02AN
ICF10	8-759-916-16	s	IC MC74HC08AN

NOTE : Please see page 22-42 for the parts that are not listed in the parts list.

(AU-133 BOARD/BOARD NO. 1-639-118-12/-13(DVR-2000/2100))

Ref. No. or Q'ty	Part No.	SP	Description
ICF11	8-759-917-06	s	IC SN74HC574N
ICF12	8-759-917-06	s	IC SN74HC574N
ICF13	8-759-917-06	s	IC SN74HC574N
ICF14	8-759-918-33	s	IC CX20160
ICF15	8-759-233-05	s	IC TC74HC283AP
ICF16	8-759-916-50	s	IC SN74HC157N
ICF17	8-759-916-50	s	IC SN74HC157N
ICF3A	8-759-921-10	s	IC SN74HC86N
ICF3B	8-759-916-19	s	IC SN74HC11N
ICG1	8-759-904-80	s	IC 74F04PC
ICG2	8-759-081-91	o	IC 5032PC-AU13326-1, PLD
ICG3	8-759-081-92	o	IC 5032PC-AU13327-2, PLD
ICG4	8-759-074-86	o	IC 22V10-AU13334-3, PLD
ICG5	8-759-916-53	s	IC SN74HC166N
ICG8	8-759-973-43	s	IC MB8421-90LPFQ
ICG9	8-759-921-21	s	IC SN74HC163N
ICG10	8-759-916-25	s	IC SN74HC32AN
ICG11	8-759-916-16	s	IC MC74HC08AN
ICG12	8-759-918-33	s	IC CX20160
ICG13	8-759-074-29	s	IC 22V10-AU13333-2, PLD
ICG14	8-759-918-33	s	IC CX20160
ICG15	8-759-903-99	s	IC SN74LS399N
ICG16	8-759-916-50	s	IC SN74HC157N
ICG17	8-759-917-06	s	IC SN74HC574N
ICG18	8-759-916-07	s	IC CX23038
ICG6A	8-759-916-16	s	IC MC74HC08AN
ICG6B	8-759-921-21	s	IC SN74HC163N
ICH5	8-759-916-53	s	IC SN74HC166N
ICH6	8-759-921-21	s	IC SN74HC163N
ICH7	8-759-921-21	s	IC SN74HC163N
ICH8	8-759-074-19	s	IC 7C235-AU13306-2, PROM
ICH9	8-759-357-15	s	IC CXD2343S
ICH11	8-759-518-16	s	IC CXD8246Q
ICH12	8-759-918-33	s	IC CX20160
ICH13	8-759-074-31	s	IC 22V10-AU13335-1, PLD
ICH14	8-759-903-99	s	IC SN74LS399N
ICH15	8-759-916-14	s	IC SN74HC04N
ICH16	8-759-916-50	s	IC SN74HC157N
ICH17	8-759-916-50	s	IC SN74HC157N
ICH18	8-759-916-50	s	IC SN74HC157N
ICJ2	8-759-083-57	s	IC SN74ALS874BNT
ICJ3	8-759-083-57	s	IC SN74ALS874BNT
ICJ4	8-759-083-57	s	IC SN74ALS874BNT
ICJ5	8-759-083-57	s	IC SN74ALS874BNT
ICJ6	8-759-001-23	s	IC MC74HC109N
ICJ7	8-759-916-12	s	IC SN74HC00N
ICJ16	8-759-147-02	s	IC UPD42101C-3
ICJ18	8-759-946-64	s	IC SN74ALS04BN
ICK1	8-759-921-17	s	IC MC74HC153N
ICK2	8-759-074-32	s	IC 22V10-AU13336-1, PLD
ICK3	8-759-074-32	s	IC 22V10-AU13336-1, PLD
ICK4	8-759-074-32	s	IC 22V10-AU13336-1, PLD
ICK5	8-759-074-32	s	IC 22V10-AU13336-1, PLD
ICK6	8-759-505-73	s	IC CY7C199-45PC
ICK8	8-759-069-45	s	IC CXD-8253BG
#ICK11	8-759-164-95	s	IC UPD43251BCR-15
ICK12	8-759-081-93	o	IC 5032PC-AU13341-1, PLD
ICK14	8-759-518-08	s	IC CXD8201Q

NOTE : For the parts marked # in the parts list, refer to "Section 23 Changed Parts".

(AU-133 BOARD/BOARD NO. 1-639-118-12/-13(DVR-2000/2100))

Ref. No. or Q'ty	Part No.	SP	Description
ICK16	8-759-918-33	s	IC CX20160
ICK17	8-759-916-50	s	IC SN74HC157N
ICK18	8-759-074-33	s	IC 22V10-AU13337-1, PLD
ICK19	8-759-357-15	s	IC CXD2343S
ICL1	8-759-083-57	s	IC SN74ALS874BNT
ICL2	8-759-921-21	s	IC SN74HC163N
ICL3	8-759-921-21	s	IC SN74HC163N
ICL4	8-759-921-21	s	IC SN74HC163N
ICL5	8-759-921-21	s	IC SN74HC163N
ICL9	8-759-233-43	s	IC TC74HC595AP
ICL16	8-759-518-14	s	IC CXD8248Q
ICL18	8-759-921-17	s	IC MC74HC153N
ICL19	8-759-357-15	s	IC CXD2343S
ICM1	8-759-357-15	s	IC CXD2343S
ICM2	8-759-916-12	s	IC SN74HC00N
ICM3	8-759-517-87	s	IC CXD8093Q
ICM5	8-759-083-57	s	IC SN74ALS874BNT
ICM7	8-759-518-09	s	IC CXD8273Q
ICM9	8-759-233-43	s	IC TC74HC595AP
ICM11	8-759-518-08	s	IC CXD8201Q
ICM14	8-759-518-08	s	IC CXD8201Q
ICM16	8-759-518-16	s	IC CXD8246Q
ICM18	8-759-078-64	o	IC 27C512F-AU13302-3, EPROM
ICM19	8-759-078-65	o	IC 27C512F-AU13303-2, EPROM
ICN1	8-759-078-66	o	IC 27C512F-AU13324-1, EPROM
ICN2	8-759-916-53	s	IC SN74HC166N
ICN3	8-759-916-53	s	IC SN74HC166N
ICN4	8-759-916-14	s	IC SN74HC04N
ICN6	8-759-147-02	s	IC UPD42101C-3
ICN7	8-759-293-91	s	IC MSM51422B-30ZS
ICN8	8-759-293-91	s	IC MSM51422B-30ZS
ICN9	8-759-293-91	s	IC MSM51422B-30ZS
ICN5A	8-759-081-90	o	IC 5032PC-AU13310-1, PLD
ICP1	8-759-917-43	s	IC SN74HC138AN
ICP2	8-759-074-34	s	IC 22V10-AU13338-1, PLD
ICP3	8-759-917-05	s	IC SN74HC541N
ICP4	8-759-917-05	s	IC SN74HC541N
ICP10	8-759-518-14	s	IC CXD8248Q
ICP11	8-759-083-57	s	IC SN74ALS874BNT
ICP12	8-759-293-91	s	IC MSM51422B-30ZS
ICP13	8-759-293-91	s	IC MSM51422B-30ZS
ICP15	8-759-916-14	s	IC SN74HC04N
ICP16	8-759-518-08	s	IC CXD8201Q
ICP18	8-759-917-06	s	IC SN74HC574N
ICP19	8-759-917-06	s	IC SN74HC574N
ICP14A	8-759-293-91	s	IC MSM51422B-30ZS
ICP14B	8-759-293-91	s	IC MSM51422B-30ZS
ICR1	8-759-074-03	s	IC 16V8-AU13340-1, PLD
ICR2	8-759-357-15	s	IC CXD2343S
ICR4	8-759-007-09	s	IC MC74HC540N
ICR5	8-759-233-43	s	IC TC74HC595AP
ICR6	8-759-917-06	s	IC SN74HC574N
ICR8	8-759-007-09	s	IC MC74HC540N
ICR10	8-759-518-14	s	IC CXD8248Q
ICR14	8-759-518-11	s	IC CXD8252Q
ICR16	8-759-518-08	s	IC CXD8201Q
#ICR18	8-759-299-49	s	IC CY7C164-25PC

NOTE : Please see page 22-42 for the parts that are not listed in the parts list.

(AU-133 BOARD/BOARD NO. 1-639-118-12/-13(DVR-2000/2100))

Ref. No. or Q'ty	Part No.	SP	Description
ICR19A	8-759-077-59	o	IC 22V10-AU13339-4, PLD
ICR19B	8-759-903-74	s	IC SN74LS374N
JW3	1-563-859-11	s	PLUG, SHORTING
JW4	1-563-859-11	s	PLUG, SHORTING
L1	1-460-085-11	s	COIL, CHOKE 6.8uH
L2	1-460-085-11	s	COIL, CHOKE 6.8uH
L3	1-410-509-11	s	INDUCTOR 10uH
L4	1-410-509-11	s	INDUCTOR 10uH
R1	1-215-469-00	s	METAL 100k 1% 1/6W
R2	1-215-469-00	s	METAL 100k 1% 1/6W
R3	1-215-437-00	s	METAL 4.7k 1% 1/6W
R4	1-215-461-00	s	METAL 47k 1% 1/6W
R17	1-215-445-00	s	METAL 10k 1% 1/6W
R18	1-215-445-00	s	METAL 10k 1% 1/6W
R52	1-215-407-00	s	METAL 270 1% 1/6W
R53	1-215-407-00	s	METAL 270 1% 1/6W
RB1	1-235-005-00	s	RESISTOR BLOCK 47kx8
RB2	1-235-005-00	s	RESISTOR BLOCK 47kx8
RB3	1-235-005-00	s	RESISTOR BLOCK 47kx8
RB4	1-235-005-00	s	RESISTOR BLOCK 47kx8
RB5	1-235-005-00	s	RESISTOR BLOCK 47kx8
RB6	1-235-005-00	s	RESISTOR BLOCK 47kx8
RB7	1-235-005-00	s	RESISTOR BLOCK 47kx8
RB8	1-231-399-00	s	RESISTOR BLOCK 330x8
RB9	1-235-005-00	s	RESISTOR BLOCK 47kx8
RB10	1-235-005-00	s	RESISTOR BLOCK 47kx8
RB11	1-235-005-00	s	RESISTOR BLOCK 47kx8
RB12	1-231-410-00	s	RESISTOR BLOCK 10kx8
RB13	1-235-005-00	s	RESISTOR BLOCK 47kx8
RB14	1-231-549-11	s	RESISTOR BLOCK 47kx4
RB15	1-235-005-00	s	RESISTOR BLOCK 47kx8
RB16	1-231-410-00	s	RESISTOR BLOCK 10kx8
X1	1-577-595-11	s	VOC, CRYSTAL 18.432000MHz

CN-401 BOARD(DVR-2000/2100)

Ref. No. or Q'ty	Part No.	SP	Description
1pc	1-639-143-11	o	PRINTED CIRCUIT BOARD, CN-401
CN373	1-506-482-11	o	CONNECTOR 3P, MALE
CN375	1-506-485-11	o	CONNECTOR 6P, MALE
CN386	1-506-481-21	o	CONNECTOR 2P, MALE
CN387	1-506-481-21	o	CONNECTOR 2P, MALE
CN389	1-506-617-11	o	CONNECTOR, PS 4P, MALE

NOTE : For the parts marked # in the parts list, refer to "Section 23 Changed Parts".

CN-481 BOARD(DVR-2000/2100)

Ref. No. or Q'ty	Part No.	SP	Description
2pcs	1-638-948-11	o	PRINTED CIRCUIT BOARD, CN-481
1pc	1-566-948-11	s	CONNECTOR 32P, MALE
1pc	1-506-640-11	o	CONNECTOR, PS 22P, MALE

CN-501 BOARD(DVR-2000/2100)

Ref. No. or Q'ty	Part No.	SP	Description
1pc	1-639-144-11	o	PRINTED CIRCUIT BOARD, CN-501
CN743	1-506-631-11	o	CONNECTOR, PS 4P, MALE
CN744	1-506-631-11	o	CONNECTOR, PS 4P, MALE
CN745	1-506-468-11	o	CONNECTOR 3P, MALE
CN746	1-506-468-11	o	CONNECTOR 3P, MALE
CN747	1-506-473-11	o	CONNECTOR 8P, MALE
CN748	1-506-473-11	o	CONNECTOR 8P, MALE

NOTE : Please see page 22-42 for the parts that are not listed in the parts list.

CN-508 BOARD(DVR-2000/2100)

Ref. No. or Q'ty	Part No.	SP	Description
1pc	A-6025-183-A	o	MOUNTED CIRCUIT BOARD, CN-508
2pcs	7-622-205-05	s	NUT M2 TYPE2
2pcs	7-628-253-40	s	SCREW, +PS 2x10
#C1	1-126-786-11	s	ELECT 47uF 20% 16V
#C2	1-126-786-11	s	ELECT 47uF 20% 16V
#C3	1-126-785-11	s	ELECT 47uF 20% 16V
C4	1-163-037-11	s	CERAMIC, CHIP 0.022uF 10% 25V
C5	1-126-796-11	s	ELECT 22uF 20% 25V
C6	1-163-037-11	s	CERAMIC, CHIP 0.022uF 10% 25V
#C7	1-126-786-11	s	ELECT 47uF 20% 16V
C8	1-163-127-00	s	CERAMIC, CHIP 270PF 5% 50V
#C9	1-115-872-11	s	ELECT 2.2uF 20% 50V
#C10	1-115-872-11	s	ELECT 2.2uF 20% 50V
C11	1-164-232-11	s	CERAMIC, CHIP 0.01uF 10% 100V
C12	1-164-232-11	s	CERAMIC, CHIP 0.01uF 10% 100V
C13	1-163-023-00	s	CERAMIC, CHIP 0.015uF 5% 50V
C14	1-163-023-00	s	CERAMIC, CHIP 0.015uF 5% 50V
C15	1-163-022-00	s	CERAMIC, CHIP 0.012uF 10% 50V
C16	1-163-127-00	s	CERAMIC, CHIP 270pF 5% 50V
C17	1-163-127-00	s	CERAMIC, CHIP 270pF 5% 50V
#C18	1-115-871-11	s	ELECT 1uF 20% 50V
#C19	1-115-871-11	s	ELECT 1uF 20% 50V
#C20	1-115-871-11	s	ELECT 1uF 20% 50V
#C21	1-115-872-11	s	ELECT 2.2uF 20% 50V
C22	1-126-162-11	s	ELECT 3.3uF 20% 50V
C23	1-126-108-11	s	ELECT 56uF 20% 16V
C24	1-126-096-11	s	ELECT 10uF 20% 35V
C25	1-126-108-11	s	ELECT 56uF 20% 16V
C26	1-163-037-11	s	CERAMIC, CHIP 0.022uF 10% 25V
C27	1-163-037-11	s	CERAMIC, CHIP 0.022uF 10% 25V
C28	1-163-037-11	s	CERAMIC, CHIP 0.022uF 10% 25V
C29	1-163-037-11	s	CERAMIC, CHIP 0.022uF 10% 25V
C30	1-163-037-11	s	CERAMIC, CHIP 0.022uF 10% 25V
C31	1-163-037-11	s	CERAMIC, CHIP 0.022uF 10% 25V
C32	1-163-037-11	s	CERAMIC, CHIP 0.022uF 10% 25V
C33	1-163-037-11	s	CERAMIC, CHIP 0.022uF 10% 25V
C34	1-163-037-11	s	CERAMIC, CHIP 0.022uF 10% 25V
C35	1-163-037-11	s	CERAMIC, CHIP 0.022uF 10% 25V
C36	1-163-037-11	s	CERAMIC, CHIP 0.022uF 10% 25V
C37	1-163-037-11	s	CERAMIC, CHIP 0.022uF 10% 25V
C38	1-163-037-11	s	CERAMIC, CHIP 0.022uF 10% 25V
CN734	1-506-620-11	o	CONNECTOR, PS 10P, MALE
CN735	1-506-621-11	o	CONNECTOR, PS 12P, MALE
CN736	1-506-626-11	o	CONNECTOR, PS 22P, MALE
CN737	1-506-630-11	o	CONNECTOR, PS 30P, MALE
CN742	1-565-784-11	o	CONNECTOR, HEADER, TX-3 60P, MALE
D1	8-719-941-23	s	DIODE DA204U
D2	8-719-941-23	s	DIODE DA204U
D3	8-719-941-23	s	DIODE DA204U
D4	8-719-800-76	s	DIODE 1SS226
IC1	8-759-135-80	s	IC UPC358C
IC2	8-759-135-80	s	IC UPC358C
#IC3	8-759-708-06	s	IC NJM78L06A
IC4	8-759-145-58	s	IC UPC4558C
IC5	8-759-145-58	s	IC UPC4558C
#IC6	8-759-984-03	s	IC LM339N
IC7	8-759-916-20	s	IC SN74HC14AN
IC8	8-759-916-20	s	IC SN74HC14AN

NOTE : For the parts marked # in the parts list, refer to "Section 23 Changed Parts".

(CN-508 BOARD(DVR-2000/2100))

Ref. No. or Q'ty	Part No.	SP	Description
IC9	8-759-916-20	s	IC SN74HC14AN
L1	1-421-329-00	s	COIL, CHOKE
L2	1-421-329-00	s	COIL, CHOKE
L3	1-421-329-00	s	COIL, CHOKE
Q1	8-729-901-00	s	TRANSISTOR DTC124EK
Q2	8-729-901-00	s	TRANSISTOR DTC124EK
Q3	8-729-901-00	s	TRANSISTOR DTC124EK
Q4	8-729-900-53	s	TRANSISTOR DTC114EK
Q5	8-729-900-53	s	TRANSISTOR DTC114EK
Q6	8-729-900-53	s	TRANSISTOR DTC114EK
Q7	8-729-900-53	s	TRANSISTOR DTC114EK
Q8	8-729-900-53	s	TRANSISTOR DTC114EK
R1	1-215-485-00	s	METAL 470k 1% 1/6W
R2	1-215-485-00	s	METAL 470k 1% 1/6W
R5	1-216-025-00	s	METAL, CHIP 100 5% 1/10W
R7	1-215-395-00	s	METAL 82 1% 1/6W
R9	1-216-049-00	s	METAL, CHIP 1k 5% 1/10W
R10	1-216-049-00	s	METAL, CHIP 1k 5% 1/10W
R11	1-216-065-00	s	METAL, CHIP 4.7k 5% 1/10W
R13	1-216-105-00	s	METAL, CHIP 220k 5% 1/10W
R14	1-216-065-00	s	METAL, CHIP 4.7k 5% 1/10W
R15	1-216-073-00	s	METAL, CHIP 10k 5% 1/10W
R16	1-216-037-00	s	METAL, CHIP 330 5% 1/10W
R17	1-216-073-00	s	METAL, CHIP 10k 5% 1/10W
R21	1-216-037-00	s	METAL, CHIP 330 5% 1/10W
R22	1-216-105-00	s	METAL, CHIP 220k 5% 1/10W
R23	1-216-041-00	s	METAL, CHIP 470 5% 1/10W
R24	1-216-041-00	s	METAL, CHIP 470 5% 1/10W
R25	1-216-041-00	s	METAL, CHIP 470 5% 1/10W
R26	1-216-105-00	s	METAL, CHIP 220k 5% 1/10W
R27	1-216-035-00	s	METAL, CHIP 270 5% 1/10W
R28	1-216-035-00	s	METAL, CHIP 270 5% 1/10W
R29	1-216-035-00	s	METAL, CHIP 270 5% 1/10W
R30	1-216-035-00	s	METAL, CHIP 270 5% 1/10W
R31	1-216-033-00	s	METAL, CHIP 220 5% 1/10W
R32	1-216-049-00	s	METAL, CHIP 1k 5% 1/10W
R33	1-216-037-00	s	METAL, CHIP 330 5% 1/10W
R34	1-216-073-00	s	METAL, CHIP 10k 5% 1/10W
R35	1-216-113-00	s	METAL, CHIP 470k 5% 1/10W
R36	1-216-073-00	s	METAL, CHIP 10k 5% 1/10W
R37	1-216-075-00	s	METAL, CHIP 12k 5% 1/10W
R38	1-216-075-00	s	METAL, CHIP 12k 5% 1/10W
R39	1-216-075-00	s	METAL, CHIP 12k 5% 1/10W
R42	1-216-105-00	s	METAL, CHIP 220k 5% 1/10W
R43	1-216-065-00	s	METAL, CHIP 4.7k 5% 1/10W
R44	1-216-065-00	s	METAL, CHIP 4.7k 5% 1/10W
R45	1-216-065-00	s	METAL, CHIP 4.7k 5% 1/10W
R46	1-216-049-00	s	METAL, CHIP 1k 5% 1/10W
R47	1-216-049-00	s	METAL, CHIP 1k 5% 1/10W
R48	1-216-105-00	s	METAL, CHIP 220k 5% 1/10W
R49	1-216-097-00	s	METAL, CHIP 100k5% 1/10W
R50	1-216-041-00	s	METAL, CHIP 470 5% 1/10W
R51	1-216-041-00	s	METAL, CHIP 470 5% 1/10W
R52	1-216-041-00	s	METAL, CHIP 470 5% 1/10W
R53	1-216-041-00	s	METAL, CHIP 470 5% 1/10W
R54	1-216-041-00	s	METAL, CHIP 470 5% 1/10W
R55	1-216-041-00	s	METAL, CHIP 470 5% 1/10W

NOTE : Please see page 22-42 for the parts that are not listed in the parts list.

(CN-508 BOARD(DVR-2000/2100))

Ref. No. or Q'ty	Part No.	SP	Description
R56	1-216-041-00	s	METAL, CHIP 470 5% 1/10W
R57	1-216-105-00	s	METAL, CHIP 220k 5% 1/10W
R58	1-216-105-00	s	METAL, CHIP 220k 5% 1/10W
R59	1-216-105-00	s	METAL, CHIP 220k 5% 1/10W
R60	1-216-105-00	s	METAL, CHIP 220k 5% 1/10W
R61	1-216-105-00	s	METAL, CHIP 220k 5% 1/10W
R62	1-216-105-00	s	METAL, CHIP 220k 5% 1/10W
R63	1-216-105-00	s	METAL, CHIP 220k 5% 1/10W
R64	1-216-105-00	s	METAL, CHIP 220k 5% 1/10W
R65	1-216-105-00	s	METAL, CHIP 220k 5% 1/10W
R66	1-216-105-00	s	METAL, CHIP 220k 5% 1/10W
R67	1-216-105-00	s	METAL, CHIP 220k 5% 1/10W
R68	1-216-105-00	s	METAL, CHIP 220k 5% 1/10W
R69	1-216-105-00	s	METAL, CHIP 220k 5% 1/10W
R70	1-216-049-00	s	METAL, CHIP 1k 5% 1/10W
R71	1-216-049-00	s	METAL, CHIP 1k 5% 1/10W
RB1	1-231-411-00	s	RESISTOR BLOCK 100kx8
RB2	1-231-411-00	s	RESISTOR BLOCK 100kx8

CN-512 BOARD(DVR-2000/2100)

Ref. No. or Q'ty	Part No.	SP	Description
1pc	A-6026-170-A	o	MOUNTED CIRCUIT BOARD, CN-512
2pcs	7-682-545-09	s	SCREW, +B 3x4
CN901	1-563-890-21	s	CONNECTOR, D-SUB 9P, FEMALE
CN902	1-563-890-21	s	CONNECTOR, D-SUB 9P, FEMALE
CN903	1-563-890-21	s	CONNECTOR, D-SUB 9P, FEMALE
CN904	1-563-893-21	s	CONNECTOR, D-SUB 50P, FEMALE
CN905	1-563-891-21	s	CONNECTOR, D-SUB 25P, FEMALE
CN906	1-563-769-11	s	CONNECTOR, 8P, FEMALE
CN970	1-566-569-11	o	CONNECTOR, TX 60P, FEMALE
CN971	1-566-569-11	o	CONNECTOR, TX 60P, FEMALE

CN-581 BOARD(DVR-2000/2100)

Ref. No. or Q'ty	Part No.	SP	Description
1pc	1-639-148-11	o	PRINTED CIRCUIT BOARD, CN-581
CN1	1-565-309-11	s	CONNECTOR, FLEXIBLE 4P
CN396	1-506-469-11	s	CONNECTOR 4P, MALE

NOTE : For the parts marked # in the parts list, refer to "Section 23 Changed Parts".

CP-156 BOARD(DVR-2000/2100/BKDV-2010)

Ref. No. or Q'ty	Part No.	SP	Description
1pc	A-6017-188-A	o	MOUNTED CIRCUIT BOARD, CP-156
C1	1-162-671-11	s	CERAMIC 22pF 5% 50V
C2	1-162-671-11	s	CERAMIC 22pF 5% 50V
#C3	1-124-455-00	s	ELECT 100uF 20% 16V
C4	1-162-806-11	s	CERAMIC 0.1uF 10% 50V
C5	1-162-806-11	s	CERAMIC 0.1uF 10% 50V
C6	1-162-806-11	s	CERAMIC 0.1uF 10% 50V
C100	1-124-234-00	s	ELECT 22uF 20% 16V
C101	1-163-033-00	s	CERAMIC, CHIP 0.022uF 50V
C102	1-163-033-00	s	CERAMIC, CHIP 0.022uF 50V
C103	1-163-033-00	s	CERAMIC, CHIP 0.022uF 50V
C104	1-163-033-00	s	CERAMIC, CHIP 0.022uF 50V
C105	1-163-033-00	s	CERAMIC, CHIP 0.022uF 50V
C106	1-163-033-00	s	CERAMIC, CHIP 0.022uF 50V
C107	1-163-033-00	s	CERAMIC, CHIP 0.022uF 50V
C108	1-163-033-00	s	CERAMIC, CHIP 0.022uF 50V
C109	1-163-033-00	s	CERAMIC, CHIP 0.022uF 50V
C110	1-163-033-00	s	CERAMIC, CHIP 0.022uF 50V
C111	1-163-033-00	s	CERAMIC, CHIP 0.022uF 50V
C112	1-163-033-00	s	CERAMIC, CHIP 0.022uF 50V
C113	1-163-033-00	s	CERAMIC, CHIP 0.022uF 50V
C114	1-163-033-00	s	CERAMIC, CHIP 0.022uF 50V
C115	1-163-033-00	s	CERAMIC, CHIP 0.022uF 50V
C116	1-163-033-00	s	CERAMIC, CHIP 0.022uF 50V
C117	1-163-033-00	s	CERAMIC, CHIP 0.022uF 50V
C119	1-163-033-00	s	CERAMIC, CHIP 0.022uF 50V
C120	1-163-033-00	s	CERAMIC, CHIP 0.022uF 50V
C121	1-163-033-00	s	CERAMIC, CHIP 0.022uF 50V
C122	1-163-033-00	s	CERAMIC, CHIP 0.022uF 50V
C123	1-163-033-00	s	CERAMIC, CHIP 0.022uF 50V
C124	1-163-033-00	s	CERAMIC, CHIP 0.022uF 50V
C125	1-163-033-00	s	CERAMIC, CHIP 0.022uF 50V
C126	1-163-033-00	s	CERAMIC, CHIP 0.022uF 50V
CN501	1-580-570-11	o	CONNECTOR LY 30P, MALE
CN502	1-580-570-11	o	CONNECTOR LY 30P, MALE
CN503	1-506-471-11	o	CONNECTOR 6P, MALE
CN515	1-580-538-11	o	CONNECTOR, LY 18P, MALE
CNI1	1-526-943-11	s	SOCKET, IC (PGA) 114P
CNI2	1-526-816-21	s	SOCKET, IC (DP) 24P
CNI3	1-526-816-21	s	SOCKET, IC (DP) 24P
CNI4	1-526-816-21	s	SOCKET, IC (DP) 24P
CNI5	1-526-656-00	s	SOCKET, IC (DP) 20P
CNI6	1-526-656-00	s	SOCKET, IC (DP) 20P
CNI9	1-526-662-21	o	SOCKET, IC (DP) 40P
CNI10	1-526-662-21	o	SOCKET, IC (DP) 40P
CNI15	1-540-080-11	s	SOCKET, IC (IC113) 68P
CNI23	1-540-080-11	s	SOCKET, IC (IC113) 68P
CNI24	1-540-080-11	s	SOCKET, IC (IC113) 68P
D1	8-719-990-87	s	DIODE EBR3403S
D2	8-719-990-87	s	DIODE EBR3403S
D3	8-719-911-19	s	DIODE 1SS119
IC1	8-759-011-89	s	IC MC68020RC16
IC2	8-759-067-63	s	IC P22V10H-CP156-02V1.3, PLD
IC3	8-759-067-64	s	IC P22V10H-CP156-03V1.2, PLD
IC4	8-759-067-65	s	IC P22V10H-CP156-04V1.2, PLD
IC5	8-759-067-66	s	IC P16V8H-CP156-05V1.2, PLD

NOTE : Please see page 22-42 for the parts that are not listed in the parts list.

(CP-156 BOARD(DVR-2000/2100/BKDV-2010))

Ref. No. or Q'ty	Part No.	SP	Description
IC6	8-759-067-67	s	IC P16V8H-CP156-06V1.1, PLD
#IC7	8-759-247-02	s	IC HM514402BZ-8
#IC8	8-759-247-02	s	IC HM514402BZ-8
#IC9	8-759-186-92	o	IC 27C4096-CP15609V2.20 EPROM
#IC10	8-759-186-93	o	IC 27C4096-CP15610V2.20 EPROM
IC11	8-759-507-79	s	IC MS62256CLL-70NC
IC12	8-759-507-79	s	IC MS62256CLL-70NC
IC13	8-759-013-87	s	IC MC68681P
#IC14	8-759-158-11	s	IC BQ4011YMA-100, NOVRAM
IC15	8-759-321-99	s	IC HD63140CP
IC16	8-759-926-14	s	IC SN74HC148NS
IC17	8-759-925-74	s	IC TC74HC04NS
IC18	8-759-925-75	s	IC SN74HC05NS
IC19	8-759-925-74	s	IC TC74HC04NS
IC20	8-759-926-99	s	IC SN74HC4075NS
IC21	8-759-926-11	s	IC SN74HC138NS
IC22	8-759-939-36	s	IC TL7705ACP
IC23	8-759-322-47	s	IC HD63484CP8
IC24	8-759-322-07	s	IC HD63487CP
IC25	8-759-926-48	s	IC SN74HC244NS
IC26	8-759-926-48	s	IC SN74HC244NS
IC27	8-759-926-49	s	IC SN74HC245NS
R1	1-216-073-00	s	METAL, CHIP 10k 5% 1/10W
R2	1-216-073-00	s	METAL, CHIP 10k 5% 1/10W
R3	1-216-073-00	s	METAL, CHIP 10k 5% 1/10W
R4	1-216-073-00	s	METAL, CHIP 10k 5% 1/10W
R5	1-216-073-00	s	METAL, CHIP 10k 5% 1/10W
R6	1-216-073-00	s	METAL, CHIP 10k 5% 1/10W
R7	1-216-073-00	s	METAL, CHIP 10k 5% 1/10W
R8	1-216-065-00	s	METAL, CHIP 4.7k 5% 1/10W
R9	1-216-065-00	s	METAL, CHIP 4.7k 5% 1/10W
R10	1-216-043-00	s	METAL, CHIP 560 5% 1/10W
R11	1-216-043-00	s	METAL, CHIP 560 5% 1/10W
R12	1-216-073-00	s	METAL, CHIP 10k 5% 1/10W
R13	1-216-073-00	s	METAL, CHIP 10k 5% 1/10W
R14	1-216-081-00	s	METAL, CHIP 22k 5% 1/10W
R15	1-216-089-00	s	METAL, CHIP 47k 5% 1/10W
R16	1-216-065-00	s	METAL, CHIP 4.7k 5% 1/10W
R17	1-216-065-00	s	METAL, CHIP 4.7k 5% 1/10W
R18	1-216-065-00	s	METAL, CHIP 4.7k 5% 1/10W
R19	1-216-065-00	s	METAL, CHIP 4.7k 5% 1/10W
R20	1-216-073-00	s	METAL, CHIP 10k 5% 1/10W
R21	1-216-073-00	s	METAL, CHIP 10k 5% 1/10W
R22	1-216-073-00	s	METAL, CHIP 10k 5% 1/10W
R23	1-216-073-00	s	METAL, CHIP 10k 5% 1/10W
R24	1-216-089-00	s	METAL, CHIP 47k 5% 1/10W
R25	1-216-089-00	s	METAL, CHIP 47k 5% 1/10W
R26	1-216-089-00	s	METAL, CHIP 47k 5% 1/10W
R28	1-216-089-00	s	METAL, CHIP 47k 5% 1/10W
R29	1-216-073-00	s	METAL, CHIP 10k 5% 1/10W
R30	1-216-089-00	s	METAL, CHIP 47k 5% 1/10W
RB1	1-231-525-00	s	RESISTOR BLOCK 4.7kx4
RB2	1-231-385-00	s	RESISTOR BLOCK 4.7kx8
RB3	1-231-525-00	s	RESISTOR BLOCK 4.7kx4
S1	1-553-856-00	s	SWITCH, TACTILE
X1	1-579-115-11	s	OSC, CRYSTAL 24.000MHz
X2	1-567-796-11	s	OSCILLATOR, CRYSTAL 14.7456MHz

NOTE : For the parts marked # in the parts list, refer to "Section 23 Changed Parts".

(CP-156 BOARD(DVR-2000/2100/BKDV-2010))

Ref. No. or Q'ty	Part No.	SP	Description
X3	1-577-076-11	s	CRYSTAL, 16.000MHz

NOTE : Please see page 22-42 for the parts that are not listed in the parts list.

CT-133 BOARD(DVR-2000/2100)

Ref. No. or Q'ty	Part No.	SP	Description
1pc	A-6023-075-A	o	MOUNTED CIRCUIT BOARD, CT-133
C1	1-161-485-00	s	CERAMIC 0.1uF 50V
C2	1-162-814-11	s	CERAMIC 0.47uF 10% 50V
C3	1-161-485-00	s	CERAMIC 0.1uF 50V
C4	1-131-347-00	s	TANTALUM 1uF 10% 35V
C5	1-130-495-11	s	MYLAR 0.1uF 5% 50V
C6	1-161-485-00	s	CERAMIC 0.1uF 50V
#C7	1-162-794-11	s	CERAMIC 0.01uF 10% 50V
C8	1-161-485-00	s	CERAMIC 0.1uF 50V
C9	1-161-485-00	s	CERAMIC 0.1uF 50V
C10	1-161-485-00	s	CERAMIC 0.1uF 50V
C11	1-161-485-00	s	CERAMIC 0.1uF 50V
C12	1-162-714-11	s	CERAMIC 150pF 1% 50V
C13	1-161-485-00	s	CERAMIC 0.1uF 50V
C14	1-162-810-11	s	CERAMIC 0.22uF 10% 50V
C15	1-162-714-11	s	CERAMIC 150pF 1% 50V
C16	1-131-341-00	s	TANTALUM 0.1uF 10% 35V
C17	1-161-485-00	s	CERAMIC 0.1uF 50V
C18	1-131-349-00	s	TANTALUM 2.2uF 10% 35V
C19	1-130-494-11	s	MYLAR 0.082uF 5% 50V
C20	1-161-485-00	s	CERAMIC 0.1uF 50V
C21	1-161-485-00	s	CERAMIC 0.1uF 50V
C22	1-124-589-11	s	ELECT 47uF 20% 16V
C23	1-130-475-00	s	MYLAR 0.0022uF 5% 50V
CN121	1-560-310-00	o	CONNECTOR, IL 4P, MALE
CN122	1-560-309-00	o	CONNECTOR, IL 3P, MALE
CN123	1-560-313-00	o	CONNECTOR, IL 8P, MALE
CN124	1-560-309-21	o	CONNECTOR, IL 3P, MALE
D1	8-719-911-19	s	DIODE 1SS119
D2	8-719-911-19	s	DIODE 1SS119
D3	8-719-911-19	s	DIODE 1SS119
D4	8-719-911-19	s	DIODE 1SS119
D5	8-719-110-13	s	DIODE RD9.1ES-B2
D6	8-719-911-19	s	DIODE 1SS119
D7	8-719-911-19	s	DIODE 1SS119
D8	8-719-102-51	s	DIODE 1SZ51
D9	8-719-911-19	s	DIODE 1SS119
D10	8-719-911-19	s	DIODE 1SS119
D11	8-719-911-19	s	DIODE 1SS119
IC1	8-759-240-93	s	IC TC4093BP
IC2	8-759-045-38	s	IC MC14538BCP
IC3	8-759-103-93	s	IC UPC393C
IC4	8-759-201-04	s	IC TC40107BP
IC5	8-759-040-01	s	IC MC14001BCP
IC6	8-759-240-93	s	IC TC4093BP
IC7	8-759-045-38	s	IC MC14538BCP
IC8	8-759-937-59	s	IC MB3759
L1	1-421-329-00	s	COIL, CHOKE
Q1	8-729-904-36	s	TRANSISTOR DTC114YS
Q2	8-729-900-65	s	TRANSISTOR DTA144ES
Q3	8-729-904-36	s	TRANSISTOR DTC114YS
Q4	8-729-105-72	s	TRANSISTOR 2SK523-L1
Q5	8-729-904-36	s	TRANSISTOR DTC114YS
Q6	8-729-900-65	s	TRANSISTOR DTA144ES
R1	1-247-903-00	s	CARBON 1M 5% 1/4W

NOTE : For the parts marked # in the parts list, refer to "Section 23 Changed Parts".

(CT-133 BOARD(DVR-2000/2100))

Ref. No. or Q'ty	Part No.	SP	Description
R2	1-247-863-91	s	CARBON 22k 5% 1/4W
R3	1-249-441-11	s	CARBON 100k 5% 1/4W
R4	1-249-429-11	s	CARBON 10k 5% 1/4W
R5	1-247-903-00	s	CARBON 1M 5% 1/4W
R6	1-249-429-11	s	CARBON 10k 5% 1/4W
R7	1-249-438-11	s	CARBON 56k 5% 1/4W
R8	1-215-492-00	s	METAL 910k 1% 1/6W
R9	1-247-887-00	s	CARBON 220k 5% 1/4W
R10	1-249-414-11	s	CARBON 560 5% 1/4W
R11	1-249-438-11	s	CARBON 56k 5% 1/4W
R12	1-215-397-00	s	METAL 100 1% 1/6W
R13	1-215-454-00	s	METAL 24k 1% 1/6W
R14	1-249-438-11	s	CARBON 56k 5% 1/4W
R15	1-247-897-11	s	CARBON 560k 5% 1/4W
R16	1-215-417-00	s	METAL 680 1% 1/6W
R17	1-215-477-00	s	METAL 220k 1% 1/6W
R18	1-247-897-11	s	CARBON 560k 5% 1/4W
R19	1-249-438-11	s	CARBON 56k 5% 1/4W
R20	1-215-453-00	s	METAL 22k 1% 1/6W
R21	1-249-431-11	s	CARBON 15k 5% 1/4W
R22	1-249-429-11	s	CARBON 10k 5% 1/4W
R23	1-247-885-00	s	CARBON 180k 5% 1/4W
R24	1-247-864-11	s	CARBON 24k 5% 1/4W
R25	1-249-431-11	s	CARBON 15k 5% 1/4W
R26	1-249-441-11	s	CARBON 100k 5% 1/4W
R27	1-249-419-11	s	CARBON 1.5k 5% 1/4W
R28	1-247-852-11	s	CARBON 7.5k 5% 1/4W
R29	1-247-843-11	s	CARBON 3.3k 5% 1/4W
R30	1-249-420-11	s	CARBON 1.8k 5% 1/4W
R31	1-249-420-11	s	CARBON 1.8k 5% 1/4W
R32	1-215-479-00	s	METAL 270k 1% 1/6W
R33	1-249-413-11	s	CARBON 470 5% 1/4W
RV1	1-237-518-21	s	RES, ADJ METAL 10K
RV2	1-237-518-21	s	RES, ADJ METAL 10K

NOTE : Please see page 22-42 for the parts that are not listed in the parts list.

DD-11 BOARD(DVR-2100 ONLY)

This board is used only for DVR-2100.

Ref. No. or Q'ty	Part No.	SP	Description
1pc	7-621-759-45	s	SCREW, +PSW 2.6x6
1pc	7-682-947-01	s	SCREW, +PSW 3x6
1pc	7-682-948-01	s	SCREW, +PSW 3x8
1pc	2-832-007-00	s	BUSHING (K), INSULATING
1pc	3-660-978-11	o	SHEET, HEAT RESISTING
4pcs	7-621-759-35	s	SCREW, +PSW 2.6x5
1pc	7-621-759-75	s	SCREW, +PSW 2.6x10
4pcs	7-621-759-65	s	SCREW, +PSW 2.6x8
2pcs	7-622-207-05	s	N 2.6, TYPE 2
2pcs	7-628-254-30	s	SCREW, +PS 2.6x10
C601	1-130-494-11	s	MYLAR 0.082uF 5% 50V
C602	1-130-471-00	s	MYLAR 0.001uF 5% 50V
C603	1-161-772-11	s	CERAMIC 0.1uF 10% 25V
#C604	1-126-964-11	s	ELECT 10uF 20% 50V
C605	1-130-487-00	s	MYLAR 0.022uF 5% 50V
C606	1-126-147-11	s	ELECT 120uF 20% 63V
C608	1-113-910-11	s	CERAMIC 470pF 10% 400V
#C609	1-113-916-11	s	CERAMIC 0.01uF 400V
#C610	1-113-916-11	s	CERAMIC 0.01uF 400V
C611	1-126-325-51	s	ELECT 3.3uF 20% 250V
C612	1-126-325-51	s	ELECT 3.3uF 20% 250V
C613	1-107-961-91	s	ELECT 10uF 20% 250V
C614	1-107-961-91	s	ELECT 10uF 20% 250V
#C616	1-130-471-00	s	MYLAR 0.001uF 5% 50V
C620	1-126-516-11	s	ELECT 120uF 20% 16V
C701	1-109-676-00	s	MICA 130pF 5% 500V
C702	1-161-039-00	s	CERAMIC 0.001uF 10% 50V
C703	1-109-675-11	s	MICA 120pF 1% 500V
C801	1-109-676-00	s	MICA 130pF 5% 500V
C802	1-161-039-00	s	CERAMIC 0.001uF 10% 50V
C803	1-109-675-11	s	MICA 120pF 1% 500V
CN338	1-506-746-11	s	CONNECTOR, DIN 48P, MALE
CP701	1-232-713-11	s	COMPOSITION CIRCUIT BLOCK
CP702	1-232-714-11	s	COMPOSITION CIRCUIT BLOCK
CP703	1-232-715-11	s	COMPOSITION CIRCUIT BLOCK
CP704	1-232-717-11	s	COMPOSITION CIRCUIT BLOCK
CP705	1-232-718-11	s	COMPOSITION CIRCUIT BLOCK
CP706	1-232-716-11	s	COMPOSITION CIRCUIT BLOCK
CP707	1-232-712-11	s	COMPOSITION CIRCUIT BLOCK
CP801	1-232-713-11	s	COMPOSITION CIRCUIT BLOCK
CP802	1-232-714-11	s	COMPOSITION CIRCUIT BLOCK
CP803	1-232-715-11	s	COMPOSITION CIRCUIT BLOCK
CP804	1-232-717-11	s	COMPOSITION CIRCUIT BLOCK
CP805	1-232-718-11	s	COMPOSITION CIRCUIT BLOCK
CP806	1-232-716-11	s	COMPOSITION CIRCUIT BLOCK
CP807	1-232-712-11	s	COMPOSITION CIRCUIT BLOCK
D601	8-719-110-78	s	DIODE RD33ES-B2
D602	8-719-300-33	s	DIODE RU-3AM
D603	8-719-300-33	s	DIODE RU-3AM
D604	8-719-300-33	s	DIODE RU-3AM
D605	8-719-300-33	s	DIODE RU-3AM
F601	⚠ 1-532-775-11	s	FUSE 0.8A 125V
IC601	8-759-980-63	s	IC MB3769AP
L601	1-421-329-00	s	COIL, CHOKE

NOTE : For the parts marked # in the parts list, refer to "Section 23 Changed Parts".

(DD-11 BOARD(DVR-2100 ONLY))

Ref. No. or Q'ty	Part No.	SP	Description
L602	1-421-329-00	s	COIL, CHOKE
L603	1-421-329-00	s	COIL, CHOKE
L610	1-421-329-00	s	COIL, CHOKE
Q601	8-729-900-65	s	TRANSISTOR DTA144ES
Q602	8-729-304-78	s	TRANSISTOR 2SK554
Q701	8-729-141-78	s	TRANSISTOR 2SC3632-K
Q702	8-729-141-78	s	TRANSISTOR 2SC3632-K
Q703	8-729-118-44	s	TRANSISTOR 2SA1413-K
Q704	8-729-118-44	s	TRANSISTOR 2SA1413-K
Q705	8-729-141-78	s	TRANSISTOR 2SC3632-K
Q706	8-729-204-94	s	TRANSISTOR 2SC3559
Q707	8-729-224-02	s	TRANSISTOR 2SC2240-BL
Q708	8-729-384-48	s	TRANSISTOR 2SA844-E
Q709	8-729-141-78	s	TRANSISTOR 2SC3632-K
Q710	8-729-118-44	s	TRANSISTOR 2SA1413-K
Q711	8-729-204-94	s	TRANSISTOR 2SC3559
Q801	8-729-141-78	s	TRANSISTOR 2SC3632-K
Q802	8-729-141-78	s	TRANSISTOR 2SC3632-K
Q803	8-729-118-44	s	TRANSISTOR 2SA1413-K
Q804	8-729-118-44	s	TRANSISTOR 2SA1413-K
Q805	8-729-141-78	s	TRANSISTOR 2SC3632-K
Q806	8-729-204-94	s	TRANSISTOR 2SC3559
Q807	8-729-224-02	s	TRANSISTOR 2SC2240-BL
Q808	8-729-384-48	s	TRANSISTOR 2SA844-E
Q809	8-729-141-78	s	TRANSISTOR 2SC3632-K
Q810	8-729-118-44	s	TRANSISTOR 2SA1413-K
Q811	8-729-204-94	s	TRANSISTOR 2SC3559
R601	1-249-425-11	s	CARBON 4.7k 5% 1/4W
R602	1-247-881-00	s	CARBON 120k 5% 1/4W
R603	1-249-437-11	s	CARBON 47k 5% 1/4W
#R604	1-247-863-91	s	CARBON 22k 5% 1/4W
R605	1-249-440-11	s	CARBON 82k 5% 1/4W
R606	1-249-429-11	s	CARBON 10k 5% 1/4W
R607	1-247-791-91	s	CARBON 22 5% 1/4W
R608	1-249-416-11	s	CARBON 820 5% 1/4W
R609	1-216-484-00	s	METAL 3.9k 5% 3W
R610	1-249-478-11	s	CARBON 2.2 5% 1/2W
R611	1-215-482-00	s	METAL 360k 1% 1/6W
R612	1-215-481-00	s	METAL 330k 1% 1/6W
R613	1-215-482-00	s	METAL 360k 1% 1/6W
R614	1-215-481-00	s	METAL 330k 1% 1/6W
R615	1-249-441-11	s	CARBON 100k 5% 1/4W
R701	1-247-895-00	s	CARBON 470k 5% 1/4W
#R702	1-247-863-91	s	CARBON 22k 5% 1/4W
R801	1-247-895-00	s	CARBON 470k 5% 1/4W
#R802	1-247-863-91	s	CARBON 22k 5% 1/4W
RV601	1-237-506-21	s	RES, ADJ METAL 100K
T601	1-449-134-11	s	TRANSFORMER, CONVERTER

NOTE : Please see page 22-42 for the parts that are not listed in the parts list.

DE-34 BOARD(DVR-2000/2100)

Ref. No. or Q'ty	Part No.	SP	Description
1pc	A-6026-159-A	o	MOUNTED CIRCUIT BOARD, DE-34
CN1	1-565-309-11	s	CONNECTOR, FLEXIBLE 4P
IC1	8-745-001-07	s	DME DM-230-1

DE-38 BOARD(DVR-2000/2100)

Ref. No. or Q'ty	Part No.	SP	Description
1pc	A-6026-163-A	o	MOUNTED CIRCUIT BOARD, DE-38
CN1	1-506-469-11	s	CONNECTOR 4P, MALE
IC1	8-745-001-07	s	DME DM-230-1

NOTE : For the parts marked # in the parts list, refer to "Section 23 Changed Parts".

DEC-56 BOARD(DVR-2000/2100)

Ref. No. or Q'ty	Part No.	SP	Description
1pc	A-6019-043-A	o	MOUNTED CIRCUIT BOARD, DEC-56
1pc	1-526-659-21	o	SOCKET, IC 28P
4pcs	1-540-083-11	s	SOCKET, IC (PGA) 89P
12pcs	1-540-086-11	s	SOCKET, IC (PGA) 179P
5pcs	1-540-206-11	s	SOCKET, IC (PGA) 209P
1pc	3-171-895-21	o	LABEL (P), SERIAL NUMBER
1pc	3-172-041-01	o	LABEL (1), SERIAL NUMBER,DEC-56
1pc	3-172-036-01	o	LABEL (2), SERIAL NUMBER,DEC-56
2pcs	3-714-634-01	o	LEVER, PC BOARD
2pcs	7-626-320-11	s	PIN, SPRING 3X8
9pcs	7-682-948-01	s	SCREW, +PSW 3x8
4pcs	7-685-547-14	s	SCREW, +BVTP 3x10 TYPE2 N-S
#C1	1-126-941-11	s	ELECT 470uF 20% 25V
#C2	1-126-941-11	s	ELECT 470uF 20% 25V
#C3	1-126-941-11	s	ELECT 470uF 20% 25V
#C4	1-126-941-11	s	ELECT 470uF 20% 25V
C185	1-162-712-11	s	CERAMIC 120pF 1% 50V
CN507	1-565-207-21	s	CONNECTOR, DIN 128P, MALE
CN508	1-565-207-21	s	CONNECTOR, DIN 128P, MALE
CP1	1-231-455-00	s	ENCAPSULATED COMPONENTS, CR
CP2	1-231-455-00	s	ENCAPSULATED COMPONENTS, CR
CP3	1-231-455-00	s	ENCAPSULATED COMPONENTS, CR
CP4	1-231-455-00	s	ENCAPSULATED COMPONENTS, CR
CP5	1-231-455-00	s	ENCAPSULATED COMPONENTS, CR
CP6	1-231-455-00	s	ENCAPSULATED COMPONENTS, CR
CP7	1-231-455-00	s	ENCAPSULATED COMPONENTS, CR
CP8	1-231-455-00	s	ENCAPSULATED COMPONENTS, CR
CP9	1-231-455-00	s	ENCAPSULATED COMPONENTS, CR
CP10	1-231-455-00	s	ENCAPSULATED COMPONENTS, CR
CP11	1-231-455-00	s	ENCAPSULATED COMPONENTS, CR
CP12	1-231-455-00	s	ENCAPSULATED COMPONENTS, CR
CP13	1-231-455-00	s	ENCAPSULATED COMPONENTS, CR
CP14	1-231-455-00	s	ENCAPSULATED COMPONENTS, CR
CP15	1-231-455-00	s	ENCAPSULATED COMPONENTS, CR
CP16	1-231-455-00	s	ENCAPSULATED COMPONENTS, CR
D1	8-719-404-07	s	LED LN45YP, AMBER
D2	8-719-404-07	s	LED LN45YP, AMBER
D3	8-719-404-07	s	LED LN45YP, AMBER
D4	8-719-404-07	s	LED LN45YP, AMBER
D9	8-719-404-07	s	LED LN45YP, AMBER
D10	8-719-404-07	s	LED LN45YP, AMBER
ICA13	8-759-926-32	s	IC AM26LS32PC
ICA14	8-759-917-05	s	IC SN74HC541N
ICA15	8-759-917-05	s	IC SN74HC541N
ICA16	8-759-917-05	s	IC SN74HC541N
ICA17	8-759-926-32	s	IC AM26LS32PC
ICA18	8-759-926-32	s	IC AM26LS32PC
ICA19	8-759-945-30	s	IC SN75ALS194N
ICA20	8-759-917-06	s	IC SN74HC574N
ICB2	8-752-033-76	s	IC CXB1008G
ICB5	8-752-033-76	s	IC CXB1008G
ICB8	8-752-033-76	s	IC CXB1008G
ICB11	8-752-033-76	s	IC CXB1008G
ICB13	8-759-902-44	s	IC SN74LS244N
ICB15	8-759-917-05	s	IC SN74HC541N

NOTE : Please see page 22-42 for the parts that are not listed in the parts list.

(DEC-56 BOARD(DVR-2000/2100))

Ref. No. or Q'ty	Part No.	SP	Description
ICB16	8-759-917-05	s	IC SN74HC541N
ICB17	8-759-917-05	s	IC SN74HC541N
ICB19	8-759-518-14	s	IC CXD8248Q
ICC2	8-759-518-12	s	IC CXD8174G
ICC5	8-759-518-12	s	IC CXD8174G
ICC8	8-759-518-12	s	IC CXD8174G
ICC11	8-759-518-12	s	IC CXD8174G
ICC14	8-759-902-44	s	IC SN74LS244N
ICC15	8-759-926-32	s	IC AM26LS32PC
ICC16	8-759-916-65	s	IC SN74HC240N
ICC17	8-759-921-21	s	IC SN74HC163N
ICC18	8-752-357-15	s	IC CXD2343S
ICC19	8-759-921-10	s	IC SN74HC86N
ICC20	8-759-916-12	s	IC SN74HC00N
ICC13A	8-759-902-40	s	IC SN74LS240N
ICC13B	8-759-004-65	s	IC MC74HC133N
ICD2	8-759-518-12	s	IC CXD8174G
ICD5	8-759-518-12	s	IC CXD8174G
ICD8	8-759-518-12	s	IC CXD8174G
ICD11	8-759-518-12	s	IC CXD8174G
ICD13	8-759-004-65	s	IC MC74HC133N
ICD14	8-759-902-44	s	IC SN74LS244N
ICD15	8-759-004-65	s	IC MC74HC133N
ICD16	8-759-186-98	o	IC 27C512-DEC5601-2, EPROM
ICD19	8-759-517-87	s	IC CXD8093Q
ICE15	8-759-004-65	s	IC MC74HC133N
ICE16	8-759-917-06	s	IC SN74HC574N
ICE17	8-759-917-06	s	IC SN74HC574N
ICE18	8-759-916-12	s	IC SN74HC00N
ICE19	8-759-916-25	s	IC SN74HC32AN
ICE20	8-759-906-71	s	IC 74F175PC
ICF1	8-759-987-32	s	IC 74ACT74PC
ICF6	8-759-282-06	s	IC PC74HC151N
ICF8	8-759-518-13	s	IC CXD8173G
ICF13	8-759-518-06	s	IC CXD8216G
ICF18	8-759-518-07	s	IC CXD8215Q
ICF2A	8-759-917-05	s	IC SN74HC541N
ICF20	8-759-917-05	s	IC SN74HC541N
ICF12A	8-759-158-18	s	IC TC524258BZ-10
ICF12B	8-759-158-18	s	IC TC524258BZ-10
ICF16A	8-759-158-18	s	IC TC524258BZ-10
ICF16B	8-759-158-18	s	IC TC524258BZ-10
ICG5	8-759-202-34	s	IC TC74HC257P
ICG6	8-759-202-34	s	IC TC74HC257P
ICH3	8-759-518-06	s	IC CXD8216G
ICH8	8-759-518-06	s	IC CXD8216G
ICH1A	8-759-518-18	s	IC TC524258BZ-10
ICH1B	8-759-518-18	s	IC TC524258BZ-10
ICH13	8-759-518-06	s	IC CXD8216G
ICH18	8-759-517-87	s	IC CXD8093Q
ICH6A	8-759-518-18	s	IC TC524258BZ-10
ICH6B	8-759-518-18	s	IC TC524258BZ-10
ICH7A	8-759-518-18	s	IC TC524258BZ-10
ICH7B	8-759-518-18	s	IC TC524258BZ-10
ICH11A	8-759-518-18	s	IC TC524258BZ-10
ICH11B	8-759-518-18	s	IC TC524258BZ-10
ICH12A	8-759-518-18	s	IC TC524258BZ-10

NOTE : For the parts marked # in the parts list, refer to "Section 23 Changed Parts".

(DEC-56 BOARD(DVR-2000/2100))

Ref. No. or Q'ty	Part No.	SP	Description
ICH12B	8-759-518-18	s	IC TC524258BZ-10
ICH16A	8-759-518-18	s	IC TC524258BZ-10
ICH16B	8-759-518-18	s	IC TC524258BZ-10
ICH20A	8-759-917-05	s	IC SN74HC541N
ICH20B	8-759-916-71	s	IC SN74HC244N
ICJ3	8-759-517-90	s	IC CXD8123G
ICJ6	8-759-917-05	s	IC SN74HC541N
ICJ8	8-759-517-90	s	IC CXD8123G
ICJ12	8-759-517-90	s	IC CXD8123G
ICJ18	8-759-517-90	s	IC CXD8123G
#ICJ20	8-759-164-95	s	IC UPD43251BCR-15
ICK11	8-759-917-05	s	IC SN74HC541N
ICK15	8-759-917-05	s	IC SN74HC541N
#ICK20	8-759-164-95	s	IC UPD43251BCR-15
#ICL1	8-759-045-27	s	IC CXK581000AM-70L
#ICL3	8-752-364-81	s	IC CXK581000AM-70L
#ICL4	8-752-364-81	s	IC CXK581000AM-70L
#ICL7	8-752-364-81	s	IC CXK581000AM-70L
#ICL8	8-752-364-81	s	IC CXK581000AM-70L
#ICL9	8-752-364-81	s	IC CXK581000AM-70L
#ICL12	8-752-364-81	s	IC CXK581000AM-70L
#ICL13	8-752-364-81	s	IC CXK581000AM-70L
#ICL14	8-752-364-81	s	IC CXK581000AM-70L
#ICL16	8-752-364-81	s	IC CXK581000AM-70L
#ICL18	8-752-364-81	s	IC CXK581000AM-70L
#ICL19	8-752-364-81	s	IC CXK581000AM-70L
#ICM1	8-752-364-81	s	IC CXK581000AM-70L
#ICM3	8-752-364-81	s	IC CXK581000AM-70L
#ICM4	8-752-364-81	s	IC CXK581000AM-70L
#ICM6	8-759-164-95	s	IC UPD43251BCR-15
#ICM7	8-752-364-81	s	IC CXK581000AM-70L
#ICM8	8-752-364-81	s	IC CXK581000AM-70L
#ICM9	8-752-364-81	s	IC CXK581000AM-70L
#ICM11	8-759-164-95	s	IC UPD43251BCR-15
#ICM12	8-752-364-81	s	IC CXK581000AM-70L
#ICM13	8-752-364-81	s	IC CXK581000AM-70L
#ICM14	8-752-364-81	s	IC CXK581000AM-70L
#ICM15	8-759-164-95	s	IC UPD43251BCR-15
#ICM16	8-752-364-81	s	IC CXK581000AM-70L
#ICM18	8-752-364-81	s	IC CXK581000AM-70L
ICM19	8-759-045-27	s	IC CXK581000AM-70L
#ICM20	8-759-164-95	s	IC UPD43251BCR-15
#ICN1	8-752-364-81	s	IC CXK581000AM-70L
#ICN3	8-752-364-81	s	IC CXK581000AM-70L
#ICN4	8-759-164-95	s	IC UPD43251BCR-15
#ICN5	8-759-164-95	s	IC UPD43251BCR-15
#ICN6	8-759-164-95	s	IC UPD43251BCR-15
#ICN7	8-752-364-81	s	IC CXK581000AM-70L
#ICN8	8-752-364-81	s	IC CXK581000AM-70L
#ICN9	8-759-164-95	s	IC UPD43251BCR-15
#ICN10	8-759-164-95	s	IC UPD43251BCR-15
#ICN11	8-759-164-95	s	IC UPD43251BCR-15
#ICN12	8-752-364-81	s	IC CXK581000AM-70L
#ICN13	8-752-364-81	s	IC CXK581000AM-70L
#ICN15	8-759-164-95	s	IC UPD43251BCR-15
#ICN16	8-752-364-81	s	IC CXK581000AM-70L
#ICN18	8-752-364-81	s	IC CXK581000AM-70L

NOTE : Please see page 22-42 for the parts that are not listed in the parts list.

(DEC-56 BOARD(DVR-2000/2100))

Ref. No. or Q'ty	Part No.	SP	Description
#ICN19	8-759-164-95	s	IC UPD43251BCR-15
#ICN14A	8-759-164-95	s	IC UPD43251BCR-15
#ICN14B	8-759-164-95	s	IC UPD43251BCR-15
L1	1-460-085-11	s	COIL, CHOKE 6.8uH
L2	1-460-085-11	s	COIL, CHOKE 6.8uH
L3	1-460-085-11	s	COIL, CHOKE 6.8uH
R1	1-215-433-00	s	METAL 3.3k 1% 1/6W
R2	1-215-419-00	s	METAL 820 1% 1/6W
R3	1-215-419-00	s	METAL 820 1% 1/6W
R12	1-215-407-00	s	METAL 270 1% 1/6W
R13	1-215-397-00	s	METAL 100 1% 1/6W
R14	1-215-397-00	s	METAL 100 1% 1/6W
R15	1-215-407-00	s	METAL 270 1% 1/6W
R16	1-215-407-00	s	METAL 270 1% 1/6W
R17	1-215-397-00	s	METAL 100 1% 1/6W
R18	1-215-397-00	s	METAL 100 1% 1/6W
R19	1-215-397-00	s	METAL 100 1% 1/6W
R20	1-215-412-00	s	METAL 430 1% 1/6W
R21	1-215-412-00	s	METAL 430 1% 1/6W
R22	1-215-412-00	s	METAL 430 1% 1/6W
#R23	1-249-429-11	s	CARBON 10k 5% 1/4W
RB1	1-231-399-00	s	RESISTOR BLOCK 330x8
RB2	1-231-399-00	s	RESISTOR BLOCK 330x8
RB5	1-235-005-00	s	RESISTOR BLOCK 47kx8
RB6	1-235-005-00	s	RESISTOR BLOCK 47kx8
RB7	1-235-005-00	s	RESISTOR BLOCK 47kx8
RB8	1-235-005-00	s	RESISTOR BLOCK 47kx8
RB9	1-235-005-00	s	RESISTOR BLOCK 47kx8
RB10	1-235-005-00	s	RESISTOR BLOCK 47kx8
RB11	1-235-005-00	s	RESISTOR BLOCK 47kx8
RB12	1-235-005-00	s	RESISTOR BLOCK 47kx8
RB13	1-235-005-00	s	RESISTOR BLOCK 47kx8
RB14	1-235-005-00	s	RESISTOR BLOCK 47kx8
RB15	1-235-005-00	s	RESISTOR BLOCK 47kx8
RB16	1-235-005-00	s	RESISTOR BLOCK 47kx8
RB17	1-235-005-00	s	RESISTOR BLOCK 47kx8
RB18	1-235-005-00	s	RESISTOR BLOCK 47kx8
RB19	1-235-005-00	s	RESISTOR BLOCK 47kx8
RB20	1-235-005-00	s	RESISTOR BLOCK 47kx8
X1	1-577-270-11	s	OSCILLATOR, CRYSTAL 45.06160MHz

NOTE : For the parts marked # in the parts list, refer to "Section 23 Changed Parts".

DET-11 BOARD(DVR-2000/2100/BKDV-2010)

Ref. No. or Q'ty	Part No.	SP	Description
#1pc	1-633-840-13	o	PRINTED CIRCUIT BOARD, DET-11
1pc	2-143-746-02	o	HOLDER, DME
1pc	7-685-133-19	s	SCREW +P 2.6X6 TYPE2 N-S
#C1	1-163-011-11	s	CERAMIC 0.0015uF 10% 50V
#C2	1-163-011-11	s	CERAMIC 0.0015uF 10% 50V
#C3	1-126-154-11	s	ELECT 47uF 20% 6.3V
#C4	1-163-011-11	s	CERAMIC 0.0015uF 10% 50V
CN1	1-506-487-11	s	CONNECTOR 8P, MALE
D1	8-719-200-02	s	DIODE 10E2
DME1	8-745-001-00	s	DME DM-211A
#IC1	8-759-983-74		IC LM324NS
PC1	8-719-800-81	s	PHOTOINTERRUPTER TLP801A
R1	1-216-105-00	s	METAL, CHIP 220k 5% 1/10W
#R2	1-216-057-00	s	METAL, CHIP 2.2k 5% 1/10W
#R3	1-216-057-00	s	METAL, CHIP 2.2k 5% 1/10W
#R4	1-249-425-11	s	CARBON 4.7k 5% 1/4W
#R5	1-216-097-00	s	METAL, CHIP 100k 5% 1/10W
#R6	1-216-057-00	s	METAL, CHIP 2.2k 5% 1/10W
#R7	1-216-057-00	s	METAL, CHIP 2.2k 5% 1/10W
#R8	1-216-073-00	s	METAL, CHIP 10k 5% 1/10W
#R9	1-216-105-00	s	METAL, CHIP 220k 5% 1/10W
#R10	1-216-057-00	s	METAL, CHIP 2.2k 5% 1/10W
#R11	1-216-057-00	s	METAL, CHIP 2.2k 5% 1/10W
#R12	1-249-425-11	s	CARBON 4.7k 5% 1/4W
#R13	1-216-097-00	s	METAL, CHIP 100k 5% 1/10W
#R14	1-216-057-00	s	METAL, CHIP 2.2k 5% 1/10W
#R15	1-216-057-00	s	METAL, CHIP 2.2k 5% 1/10W
#R16	1-216-073-00	s	METAL, CHIP 10k 5% 1/10W
#R17	1-216-065-00	s	METAL, CHIP 4.7k 5% 1/10W
#R18	1-216-033-00	s	METAL, CHIP 220 5% 1/10W
#R19	1-249-406-11	s	CARBON 120 5% 1/4W
RV1	1-228-469-00	s	RES, ADJ METAL 200
RV2	1-228-469-00	s	RES, ADJ METAL 200

NOTE : Please see page 22-42 for the parts that are not listed in the parts list.

DT-26 BOARD(DVR-2100 ONLY)

This board is used only for DVR-2100.

Ref. No. or Q'ty	Part No.	SP	Description
1pc	A-6011-182-B	o	MOUNTED CIRCUIT BOARD, DT-26
#2pcs	1-526-656-00	o	SOCKET, IC (DP) 20P
#1pc	1-526-659-00	o	SOCKET, IC 28P
#1pc	1-526-997-11	s	SOCKET, IC 68P
1pc	1-540-080-11	s	SOCKET, IC (IC113) 68P
1pc	3-171-894-11	o	LABEL (V), SERIAL NUMBER
2pcs	3-673-249-11	o	LEVER, PC BOARD
2pcs	7-626-320-11	s	PIN, SPRING 3x8
4pcs	7-682-948-01	s	SCREW, +PSW 3x8
6pcs	7-685-547-14	s	SCREW, +BVTP 3x10 TYPE2 N-S
C1	1-124-455-00	s	ELECT 100uF 20% 16V
C2	1-124-455-00	s	ELECT 100uF 20% 16V
C3	1-124-455-00	s	ELECT 100uF 20% 16V
C4	1-124-455-00	s	ELECT 100uF 20% 16V
C11	1-164-232-11	s	CERAMIC, CHIP 0.01uF 10% 100V
C12	1-164-232-11	s	CERAMIC, CHIP 0.01uF 10% 100V
C13	1-164-232-11	s	CERAMIC, CHIP 0.01uF 10% 100V
C14	1-164-232-11	s	CERAMIC, CHIP 0.01uF 10% 100V
C15	1-164-232-11	s	CERAMIC, CHIP 0.01uF 10% 100V
C16	1-164-232-11	s	CERAMIC, CHIP 0.01uF 10% 100V
C17	1-164-232-11	s	CERAMIC, CHIP 0.01uF 10% 100V
C18	1-164-232-11	s	CERAMIC, CHIP 0.01uF 10% 100V
C19	1-163-005-11	s	CERAMIC 470pF 10% 50V
C20	1-163-005-11	s	CERAMIC 470pF 10% 50V
C21	1-163-005-11	s	CERAMIC 470pF 10% 50V
C22	1-163-005-11	s	CERAMIC 470pF 10% 50V
C23	1-163-005-11	s	CERAMIC 470pF 10% 50V
C24	1-163-005-11	s	CERAMIC 470pF 10% 50V
C25	1-163-005-11	s	CERAMIC 470pF 10% 50V
C26	1-163-005-11	s	CERAMIC 470pF 10% 50V
C27	1-163-989-11	s	CERAMIC, CHIP 0.033uF 10% 25V
C28	1-163-989-11	s	CERAMIC, CHIP 0.033uF 10% 25V
C29	1-163-989-11	s	CERAMIC, CHIP 0.033uF 10% 25V
C30	1-163-989-11	s	CERAMIC, CHIP 0.033uF 10% 25V
C31	1-163-989-11	s	CERAMIC, CHIP 0.033uF 10% 25V
C32	1-163-989-11	s	CERAMIC, CHIP 0.033uF 10% 25V
C33	1-163-989-11	s	CERAMIC, CHIP 0.033uF 10% 25V
C34	1-163-989-11	s	CERAMIC, CHIP 0.033uF 10% 25V
C35	1-162-814-11	s	CERAMIC 0.47uF 10% 50V
C36	1-162-814-11	s	CERAMIC 0.47uF 10% 50V
C37	1-164-232-11	s	CERAMIC, CHIP 0.01uF 10% 100V
C38	1-164-232-11	s	CERAMIC, CHIP 0.01uF 10% 100V
C39	1-164-004-11	s	CERAMIC, CHIP 0.1uF 10% 25V
C40	1-164-004-11	s	CERAMIC, CHIP 0.1uF 10% 25V
C41	1-164-004-11	s	CERAMIC, CHIP 0.1uF 10% 25V
C42	1-164-004-11	s	CERAMIC, CHIP 0.1uF 10% 25V
C43	1-164-004-11	s	CERAMIC, CHIP 0.1uF 10% 25V
C44	1-164-004-11	s	CERAMIC, CHIP 0.1uF 10% 25V
C45	1-164-004-11	s	CERAMIC, CHIP 0.1uF 10% 25V
C46	1-164-004-11	s	CERAMIC, CHIP 0.1uF 10% 25V
C47	1-164-004-11	s	CERAMIC, CHIP 0.1uF 10% 25V
C48	1-164-004-11	s	CERAMIC, CHIP 0.1uF 10% 25V
C49	1-164-004-11	s	CERAMIC, CHIP 0.1uF 10% 25V
C50	1-164-004-11	s	CERAMIC, CHIP 0.1uF 10% 25V
C51	1-164-004-11	s	CERAMIC, CHIP 0.1uF 10% 25V
C52	1-164-004-11	s	CERAMIC, CHIP 0.1uF 10% 25V
C53	1-164-004-11	s	CERAMIC, CHIP 0.1uF 10% 25V

NOTE : For the parts marked # in the parts list, refer to "Section 23 Changed Parts".

(DT-26 BOARD(DVR-2100 ONLY))

Ref. No. or Q'ty	Part No.	SP	Description
C54	1-164-004-11	s	CERAMIC, CHIP 0.1uF 10% 25V
C55	1-126-157-11	s	ELECT 10uF 20% 16V
C61	1-162-814-11	s	CERAMIC 0.47uF 10% 50V
C62	1-162-814-11	s	CERAMIC 0.47uF 10% 50V
C63	1-163-227-11	s	CERAMIC, CHIP 10PF 5% 50V
C64	1-163-227-11	s	CERAMIC, CHIP 10PF 5% 50V
C65	1-163-275-11	s	CERAMIC, CHIP 0.001uF 5% 50V
C66	1-163-275-11	s	CERAMIC, CHIP 0.001uF 5% 50V
C67	1-163-275-11	s	CERAMIC, CHIP 0.001uF 5% 50V
C68	1-163-275-11	s	CERAMIC, CHIP 0.001uF 5% 50V
C69	1-164-004-11	s	CERAMIC, CHIP 0.1uF 10% 25V
C121	1-164-004-11	s	CERAMIC, CHIP 0.1uF 10% 25V
C122	1-164-004-11	s	CERAMIC, CHIP 0.1uF 10% 25V
C123	1-164-004-11	s	CERAMIC, CHIP 0.1uF 10% 25V
C124	1-164-004-11	s	CERAMIC, CHIP 0.1uF 10% 25V
C125	1-164-004-11	s	CERAMIC, CHIP 0.1uF 10% 25V
C126	1-164-004-11	s	CERAMIC, CHIP 0.1uF 10% 25V
C127	1-164-004-11	s	CERAMIC, CHIP 0.1uF 10% 25V
C128	1-164-004-11	s	CERAMIC, CHIP 0.1uF 10% 25V
CN704	1-506-748-11	s	CONNECTOR, DIN 96P, MALE
CN705	1-506-746-11	s	CONNECTOR, DIN 48P, MALE
CN706	1-506-746-11	s	CONNECTOR, DIN 48P, MALE
#D11	8-719-800-76	s	DIODE 1SS226
#D12	8-719-800-76	s	DIODE 1SS226
#D13	8-719-800-76	s	DIODE 1SS226
#D14	8-719-800-76	s	DIODE 1SS226
#D15	8-719-800-76	s	DIODE 1SS226
#D16	8-719-800-76	s	DIODE 1SS226
#D17	8-719-800-76	s	DIODE 1SS226
#D18	8-719-800-76	s	DIODE 1SS226
#D19	8-719-800-76	s	DIODE 1SS226
#D20	8-719-800-76	s	DIODE 1SS226
#D21	8-719-800-76	s	DIODE 1SS226
#D22	8-719-800-76	s	DIODE 1SS226
#D23	8-719-800-76	s	DIODE 1SS226
#D24	8-719-800-76	s	DIODE 1SS226
#D25	8-719-800-76	s	DIODE 1SS226
#D26	8-719-800-76	s	DIODE 1SS226
#D27	8-719-800-76	s	DIODE 1SS226
#D28	8-719-800-76	s	DIODE 1SS226
D29	8-719-400-35	s	LED LN35BP, GRN
D30	8-719-400-35	s	LED LN35BP, GRN
D31	8-719-400-35	s	LED LN35BP, GRN
D32	8-719-400-35	s	LED LN35BP, GRN
D33	8-719-400-35	s	LED LN35BP, GRN
D34	8-719-400-35	s	LED LN35BP, GRN
D35	8-719-400-35	s	LED LN35BP, GRN
D36	8-719-400-35	s	LED LN35BP, GRN
#D37	8-719-800-76	s	DIODE 1SS226
#D38	8-719-800-76	s	DIODE 1SS226
ICA3	8-759-103-95	s	IC UPC648C
ICA4	8-759-925-80	s	IC SN74HC14NS
ICA6	8-759-084-36	o	IC 16V8F-DT2613-2, PLD
ICA7	8-759-008-01	s	IC MC74HC280F
ICA8	8-759-008-01	s	IC MC74HC280F
ICB2	8-759-103-95	s	IC UPC648C
ICB3	8-759-908-92	s	IC TL084CNS
ICB4	8-759-983-55	s	IC AD42020-1

NOTE : Please see page 22-42 for the parts that are not listed in the parts list.

(DT-26 BOARD(DVR-2100 ONLY))

Ref. No. or Q'ty	Part No.	SP	Description
ICC2	8-759-926-82	s	IC SN74HC574ANS
ICC3	8-759-926-82	s	IC SN74HC574ANS
ICC4	8-759-011-64	s	IC MC74HC4052F
ICC5	8-759-908-92	s	IC TL084CNS
ICC6	8-759-908-92	s	IC TL084CNS
ICC7	8-759-908-92	s	IC TL084CNS
ICC8	8-759-908-92	s	IC TL084CNS
ICD2	8-759-926-82	s	IC SN74HC574ANS
ICD3	8-759-926-82	s	IC SN74HC574ANS
ICD4	8-759-908-92	s	IC TL084CNS
ICE2	8-759-011-63	s	IC MC74HC4051F
ICE3	8-759-983-55	s	IC AD42020-1
ICE4	8-759-983-55	s	IC AD42020-1
ICE5	8-759-983-55	s	IC AD42020-1
ICE6	8-759-983-55	s	IC AD42020-1
ICE7	8-759-908-92	s	IC TL084CNS
ICE8	8-759-908-92	s	IC TL084CNS
ICF2	8-759-908-92	s	IC TL084CNS
ICF3	8-759-908-92	s	IC TL084CNS
ICF4	8-759-908-92	s	IC TL084CNS
ICF5	8-759-908-92	s	IC TL084CNS
ICF6	8-759-011-64	s	IC MC74HC4052F
ICF7	8-759-908-92	s	IC TL084CNS
ICF8	8-759-908-92	s	IC TL084CNS
ICG2	8-759-084-59	o	IC 27C512F-DT2602-1, EPROM
ICG4	8-759-084-35	o	IC 16V8F-DT2612-2, PLD
ICG6	8-759-926-80	s	IC SN74HC573NS
ICG8	8-759-103-95	s	IC UPC648C
ICH4	8-759-084-33	o	IC 16V8F-DT2610-2, PLD
ICH6	8-759-926-80	s	IC SN74HC573NS
ICJ1	8-759-926-82	s	IC SN74HC574ANS
ICJ3	8-759-084-32	o	IC 16V8F-DT2609-2, PLD
ICJ4	8-759-084-34	o	IC 16V8F-DT2611-2, PLD
ICJ8	8-759-103-95	s	IC UPC648C
ICK3	8-759-084-31	o	IC 16V8F-DT2608-2, PLD
ICK4	8-759-084-63	o	IC 16V8F-DT2606-3, PLD
ICK6	8-759-973-43	s	IC MB8421-90LPFQ
ICK8	8-759-926-49	s	IC SN74HC245NS
ICL1	8-759-908-92	s	IC TL084CNS
ICL3	8-759-084-61	o	IC 16V8F-DT2604-3, PLD
ICL4	8-759-084-62	o	IC 16V8F-DT2605-3, PLD
ICL8	8-759-926-49	s	IC SN74HC245NS
ICM1	8-759-908-92	s	IC TL084CNS
ICM3	8-759-084-64	o	IC 16V8-DT2607-4, PLD
ICM4	8-759-084-60	o	IC 16V8F-DT2603-2, PLD
ICM6	8-759-925-76	s	IC SN74HC08NS
ICM7	8-759-925-90	s	IC SN74HC74NS
ICM8	8-759-926-49	s	IC SN74HC245NS
ICN6	8-759-147-92	s	IC UPD71621C
ICN8	8-759-113-55	s	IC UPD71054GB
ICP1	8-759-947-86	s	IC CXD1317Q
ICP4	8-759-147-94	s	IC UPD70136R-16
ICQ8	8-759-143-23	s	IC UPD71059GB-3B4

NOTE : For the parts marked # in the parts list, refer to "Section 23 Changed Parts".

(DT-26 BOARD(DVR-2100 ONLY))

Ref. No. or Q'ty	Part No.	SP	Description
ICR2	8-759-938-68	s	IC CXD1095Q
#ICR4	8-759-369-72	s	IC S-22S12I10, NOVRAM
ICR6	8-759-321-99	s	IC HD63140CP
ICR8	8-759-925-74	s	IC TC74HC04NS
ICS3	8-759-367-23	s	IC TC55257CFL-70L
#ICS4	8-759-369-72	s	IC S-22S12I10, NOVRAM
ICS8	8-759-908-92	s	IC TL084CNS
ICT3	8-759-367-23	s	IC TC55257CFL-70L
ICT4	8-759-332-14	o	IC 27C512-DT2601-0109, EPROM
ICT7	8-759-908-92	s	IC TL084CNS
ICT8	8-759-908-92	s	IC TL084CNS
#ICU2	8-759-908-92	s	IC TL084CNS
#ICU3	8-759-239-55	s	IC TC74HC123AF
L1	1-421-329-00	s	COIL, CHOKE
L2	1-421-329-00	s	COIL, CHOKE
L3	1-421-329-00	s	COIL, CHOKE
L4	1-421-329-00	s	COIL, CHOKE
#R83	1-216-073-00	s	METAL, CHIP 10k 5% 1/10W
#R84	1-216-073-00	s	METAL, CHIP 10k 5% 1/10W
#R85	1-216-073-00	s	METAL, CHIP 10k 5% 1/10W
#R90	1-216-073-00	s	METAL, CHIP 10k 5% 1/10W
#R91	1-216-073-00	s	METAL, CHIP 10k 5% 1/10W
#R100	1-216-025-91	s	METAL, CHIP 100 5% 1/10W
#R101	1-216-025-91	s	METAL, CHIP 100 5% 1/10W
#R106	1-216-025-91	s	METAL, CHIP 100 5% 1/10W
#R107	1-216-025-91	s	METAL, CHIP 100 5% 1/10W
#R139	1-216-073-00	s	METAL, CHIP 10k 5% 1/10W
#R140	1-216-073-00	s	METAL, CHIP 10k 5% 1/10W
#R141	1-216-025-91	s	METAL, CHIP 100 5% 1/10W
#R145	1-216-073-00	s	METAL, CHIP 10k 5% 1/10W
#R146	1-216-073-00	s	METAL, CHIP 10k 5% 1/10W
#R147	1-216-025-91	s	METAL, CHIP 100 5% 1/10W
#R178	1-216-073-00	s	METAL, CHIP 10k 5% 1/10W
#R181	1-216-073-00	s	METAL, CHIP 10k 5% 1/10W
#R182	1-216-025-91	s	METAL, CHIP 100 5% 1/10W
#R183	1-216-025-91	s	METAL, CHIP 100 5% 1/10W
#R184	1-216-025-91	s	METAL, CHIP 100 5% 1/10W
#R195	1-216-073-00	s	METAL, CHIP 10k 5% 1/10W
#R196	1-216-073-00	s	METAL, CHIP 10k 5% 1/10W
#R197	1-216-073-00	s	METAL, CHIP 10k 5% 1/10W
#R198	1-216-073-00	s	METAL, CHIP 10k 5% 1/10W
#R199	1-216-073-00	s	METAL, CHIP 10k 5% 1/10W
#R201	1-216-025-91	s	METAL, CHIP 100 5% 1/10W
#R206	1-216-025-91	s	METAL, CHIP 100 5% 1/10W
#R210	1-216-073-00	s	METAL, CHIP 10k 5% 1/10W
#R212	1-216-025-91	s	METAL, CHIP 100 5% 1/10W
#R217	1-216-025-91	s	METAL, CHIP 100 5% 1/10W
#R220	1-216-073-00	s	METAL, CHIP 10k 5% 1/10W
#R222	1-216-073-00	s	METAL, CHIP 10k 5% 1/10W
#R233	1-216-073-00	s	METAL, CHIP 10k 5% 1/10W
#R234	1-216-073-00	s	METAL, CHIP 10k 5% 1/10W
#R235	1-216-073-00	s	METAL, CHIP 10k 5% 1/10W
#R236	1-216-073-00	s	METAL, CHIP 10k 5% 1/10W
#R237	1-216-073-00	s	METAL, CHIP 10k 5% 1/10W
#R238	1-216-073-00	s	METAL, CHIP 10k 5% 1/10W
#R239	1-216-073-00	s	METAL, CHIP 10k 5% 1/10W
#R240	1-216-073-00	s	METAL, CHIP 10k 5% 1/10W

NOTE : Please see page 22-42 for the parts that are not listed in the parts list.

(DT-26 BOARD(DVR-2100 ONLY))

Ref. No. or Q'ty	Part No.	SP	Description
#R241	1-216-073-00	s	METAL, CHIP 10k 5% 1/10W
#R242	1-216-073-00	s	METAL, CHIP 10k 5% 1/10W
#R243	1-216-073-00	s	METAL, CHIP 10k 5% 1/10W
#R244	1-216-073-00	s	METAL, CHIP 10k 5% 1/10W
#R245	1-216-073-00	s	METAL, CHIP 10k 5% 1/10W
#R246	1-216-073-00	s	METAL, CHIP 10k 5% 1/10W
#R247	1-216-073-00	s	METAL, CHIP 10k 5% 1/10W
#R248	1-216-073-00	s	METAL, CHIP 10k 5% 1/10W
#R252	1-216-073-00	s	METAL, CHIP 10k 5% 1/10W
RB13	1-231-557-00	s	RESISTOR BLOCK 100kx4
RB14	1-235-005-00	s	RESISTOR BLOCK 47kx8
RB15	1-231-400-00	s	RESISTOR BLOCK 390x8
RB16	1-235-005-00	s	RESISTOR BLOCK 47kx8
RB17	1-231-410-00	s	RESISTOR BLOCK 10kx8
RB18	1-231-410-00	s	RESISTOR BLOCK 10kx8
RV11	1-228-458-00	s	RES, ADJ METAL 5k
RV12	1-228-458-00	s	RES, ADJ METAL 5k
S11	1-570-623-11	s	SWITCH, DIP 8-CKT
S12	1-553-856-00	s	SWITCH, TACTILE
X1	1-567-787-11	s	OSCILLATOR, CRYSTAL 32.00000MHz

NOTE : For the parts marked # in the parts list, refer to "Section 23 Changed Parts".

DUS-481 BOARD(DVR-2000/2100)

This board is used only for the following units.
DVR-2000(J) : S/N 10001 thru 10099
DVR-2000(UC): S/N 10001 thru 10099
DVR-2000(EK): S/N 10001 thru 10099
DVR-2100(J) : S/N 10001 thru 10399
DVR-2100(UC): S/N 10001 thru 10399
DVR-2100(EK): S/N 10001 thru 10399

All the components parts on DUS-481 board are supplied with together when you order the AE-12 board.

Ref. No. or Q'ty	Part No.	SP	Description
1pc	1-641-736-11	o	PRINTED CIRCUIT BOARD, DUS-481
C1	1-163-235-11	s	CERAMIC, CHIP 22pF 5% 50V
C2	1-135-160-21	s	TANTALUM 15uF 10% 16V
C3	1-163-038-00	s	CERAMIC, CHIP 0.1uF 25V
C4	1-163-038-00	s	CERAMIC, CHIP 0.1uF 25V
C5	1-135-160-21	s	TANTALUM 15uF 10% 16V
D1	8-719-911-19	s	DIODE 1SS119
D2	8-719-911-19	s	DIODE 1SS119
IC1	8-759-637-09	s	IC M5238FP
RV1	1-228-460-00	s	RES, ADJ, METAL 20k
RV2	1-228-460-00	s	RES, ADJ, METAL 20k

EX-244 BOARD(DVR-2000/2100)

Ref. No. or Q'ty	Part No.	SP	Description
1pc	A-6026-173-A	o	MOUNTED CIRCUIT BOARD, EX-244
1pc	3-701-439-11	s	WASHER
2pcs	3-646-065-00	o	HOLDER
4pcs	3-673-676-11	s	RAIL, PC BOARD GUIDE
1pc	3-722-863-02	o	GUIDE (RIGHT), RAIL
1pc	3-722-863-12	o	GUIDE (LEFT), RAIL
1pc	3-735-194-01	o	INSULATOR, EX HANDLE
8pcs	7-685-547-14	s	SCREW, +BVTP 3x10 TYPE2 N-S
22pcs	7-682-948-01	s	SCREW, +PSW 3x8
CN100	1-565-207-21	s	CONNECTOR, DIN 128P, MALE
CN101	1-565-207-21	s	CONNECTOR, DIN 128P, MALE
CN102	1-565-205-12	s	CONNECTOR, DIN 128P, FEMALE
CN103	1-565-205-12	s	CONNECTOR, DIN 128P, FEMALE

EX-245 BOARD(DVR-2000/2100)

Ref. No. or Q'ty	Part No.	SP	Description
1pc	A-6026-174-A	o	MOUNTED CIRCUIT BOARD, EX-245
2pcs	3-722-742-01	o	LEVER, EJECT
2pcs	3-722-743-01	o	SHAFT (S), ROTARY
2pcs	7-624-106-04	s	STOP RING 3.0, TYPE -E
4pcs	7-682-947-01	s	SCREW, +PSW 3x6
4pcs	7-682-951-01	s	SCREW, +PSW 3x14
12pcs	7-685-547-14	s	SCREW, +BVTP 3x10 TYPE2 N-S
CN100	1-506-748-11	s	CONNECTOR, DIN 96P, MALE
CN101	1-506-746-11	s	CONNECTOR, DIN 48P, MALE
CN102	1-506-746-11	s	CONNECTOR, DIN 48P, MALE
CN103	1-563-341-11	s	CONNECTOR, DIN 96P, FEMALE
CN104	1-563-339-11	o	CONNECTOR, DIN 48P, FEMALE
CN105	1-563-339-11	o	CONNECTOR, DIN 48P, FEMALE

EX-288 BOARD(DVR-2000/2100)

Ref. No. or Q'ty	Part No.	SP	Description
1pc	A-6026-175-A	o	MOUNTED CIRCUIT BOARD, EX-288
4pcs	7-682-948-01	s	SCREW, +PSW 3x8
4pcs	7-685-547-14	s	SCREW, +BVTP 3x10 TYPE2 N-S
CN101	1-506-746-11	s	CONNECTOR, DIN 48P, MALE
CN102	1-565-689-11	o	CONNECTOR, TX 60P, MALE
CN103	1-506-639-11	o	CONNECTOR, PS 20P, MALE
CN104	1-506-467-11	o	CONNECTOR 2P, MALE
CN105	1-506-632-11	o	CONNECTOR, PS 6P, MALE
CN201	1-563-339-11	o	CONNECTOR, DIN 48P, FEMALE
CN202	1-565-689-11	o	CONNECTOR, TX 60P, MALE
CN203	1-506-639-11	o	CONNECTOR, PS 20P, MALE
CN204	1-506-467-11	o	CONNECTOR 2P, MALE
CN205	1-506-632-11	o	CONNECTOR, PS 6P, MALE

FP-33 BOARD(DVR-2000/2100)

Ref. No. or Q'ty	Part No.	SP	Description
#1pc	1-639-136-12	o	PRINTED CIRCUIT BOARD, FP-33
CN383	1-506-634-11	o	CONNECTOR, PS 10P, MALE
CN384	1-563-769-11	s	CONNECTOR, 8P, FEMALE

NOTE : Please see page 22-42 for the parts that are not listed in the parts list.

NOTE : For the parts marked # in the parts list, refer to "Section 23 Changed Parts".

FU-53 BOARD(DVR-2000/2100)

Ref. No. or Q'ty	Part No.	SP	Description
All the component parts on FU-53 board are supplied with together when you order the PS-256 board.			
#1pc	1-639-463-12	o	PRINTED CIRCUIT BOARD, FU-53
CN106	1-564-153-00	o	CONNECTOR, PS 12P, MALE
F1	⚠ 1-532-779-11	s	FUSE 2A 125V
F2	⚠ 1-576-071-11	s	FUSE 6.3A 125V
F3	⚠ 1-576-071-11	s	FUSE 6.3A 125V
F4	⚠ 1-532-782-11	s	FUSE, (SECONDARY)

NOTE : Please see page 22-42 for the parts that are not listed in the parts list.

IF-276 BOARD(DVR-2000/2100)

Ref. No. or Q'ty	Part No.	SP	Description
#1pc	A-6021-018-B	o	MOUNTED CIRCUIT BOARD, IF-276
C1	1-163-110-00	s	CERAMIC, CHIP 51pF 5% 50V
C2	1-163-037-11	s	CERAMIC, CHIP 0.022uF 10% 25V
C3	1-163-110-00	s	CERAMIC, CHIP 51pF 5% 50V
C4	1-163-110-00	s	CERAMIC, CHIP 51pF 5% 50V
C5	1-163-110-00	s	CERAMIC, CHIP 51pF 5% 50V
C6	1-163-037-11	s	CERAMIC, CHIP 0.022uF 10% 25V
C7	1-163-110-00	s	CERAMIC, CHIP 51pF 5% 50V
C8	1-163-110-00	s	CERAMIC, CHIP 51pF 5% 50V
C9	1-163-110-00	s	CERAMIC, CHIP 51pF 5% 50V
C10	1-163-110-00	s	CERAMIC, CHIP 51pF 5% 50V
C11	1-163-037-11	s	CERAMIC, CHIP 0.022uF 10% 25V
C12	1-163-037-11	s	CERAMIC, CHIP 0.022uF 10% 25V
C13	1-124-234-00	s	ELECT 22uF 20% 16V
C14	1-124-589-11	s	ELECT 47uF 20% 16V
C15	1-124-234-00	s	ELECT 22uF 20% 16V
C16	1-124-589-11	s	ELECT 47uF 20% 16V
C17	1-124-234-00	s	ELECT 22uF 20% 16V
C18	1-124-234-00	s	ELECT 22uF 20% 16V
C19	1-163-037-11	s	CERAMIC, CHIP 0.022uF 10% 25V
C20	1-163-037-11	s	CERAMIC, CHIP 0.022uF 10% 25V
C21	1-163-037-11	s	CERAMIC, CHIP 0.022uF 10% 25V
C22	1-163-037-11	s	CERAMIC, CHIP 0.022uF 10% 25V
C23	1-163-037-11	s	CERAMIC, CHIP 0.022uF 10% 25V
C24	1-163-275-11	s	CERAMIC, CHIP 0.001uF 5% 50V
C25	1-163-037-11	s	CERAMIC, CHIP 0.022uF 10% 25V
C26	1-163-037-11	s	CERAMIC, CHIP 0.022uF 10% 25V
C27	1-163-251-11	s	CERAMIC, CHIP 100pF 5% 50V
C28	1-163-251-11	s	CERAMIC, CHIP 100pF 5% 50V
C29	1-163-251-11	s	CERAMIC, CHIP 100pF 5% 50V
C30	1-163-251-11	s	CERAMIC, CHIP 100pF 5% 50V
C31	1-163-251-11	s	CERAMIC, CHIP 100pF 5% 50V
C32	1-163-251-11	s	CERAMIC, CHIP 100pF 5% 50V
C33	1-163-251-11	s	CERAMIC, CHIP 100pF 5% 50V
C34	1-163-251-11	s	CERAMIC, CHIP 100pF 5% 50V
C35	1-163-251-11	s	CERAMIC, CHIP 100pF 5% 50V
C36	1-163-251-11	s	CERAMIC, CHIP 100pF 5% 50V
C37	1-163-037-11	s	CERAMIC, CHIP 0.022uF 10% 25V
C38	1-163-037-11	s	CERAMIC, CHIP 0.022uF 10% 25V
C39	1-163-037-11	s	CERAMIC, CHIP 0.022uF 10% 25V
C40	1-163-037-11	s	CERAMIC, CHIP 0.022uF 10% 25V
C41	1-163-037-11	s	CERAMIC, CHIP 0.022uF 10% 25V
C42	1-126-967-11	s	ELECT 47uF 20% 50V
C43	1-163-037-11	s	CERAMIC, CHIP 0.022uF 10% 25V
C44	1-124-589-11	s	ELECT 47uF 20% 16V
CN952	1-569-214-11	s	CONNECTOR, HEADDER, TX-3 40P, MALE
CN960	1-506-632-11	o	CONNECTOR, PS 6P, MALE
CN970	1-573-510-11	o	CONNECTOR, TX 60P, MALE
CN971	1-573-510-11	o	CONNECTOR, TX 60P, MALE
#CNI22	1-526-816-21	o	SOCKET, IC (DP) 24P
F1	⚠1-532-776-21	s	FUSE 1A 125V
FB1	1-535-178-00	s	BEAD, FERRITE
IC1	8-759-030-46	s	IC MC3486M
IC2	8-759-926-30	s	IC AM26LS30PC
IC3	8-759-271-09	s	IC LT1181ACN
IC4	8-759-271-09	s	IC LT1181ACN

NOTE : For the parts marked # in the parts list, refer to "Section 23 Changed Parts".

(IF-276 BOARD(DVR-2000/2100))

Ref. No. or Q'ty	Part No.	SP	Description
IC5	8-759-030-46	s	IC MC3486M
IC6	8-759-926-30	s	IC AM26LS30PC
IC7	8-759-011-65	s	IC MC74HC4053F
IC8	8-759-011-65	s	IC MC74HC4053F
IC9	8-759-925-74	s	IC TC74HC04NS
IC10	8-759-518-78	s	IC SN751177N
IC11	8-759-518-69	s	IC MB89363
IC12	8-759-925-80	s	IC SN74HC14NS
IC13	8-759-925-80	s	IC SN74HC14NS
IC14	8-759-926-56	s	IC SN74HC273NS
IC16	8-759-926-49	s	IC SN74HC245NS
IC17	8-759-926-48	s	IC SN74HC244NS
IC19	8-759-011-65	s	IC MC74HC4053F
IC20	8-759-926-56	s	IC SN74HC273NS
#IC22	8-759-087-72	o	IC 22V10-IF276-01-01, PLD
#JP1	1-564-948-21	o	PIN, SHORTING
JS1	1-562-579-21	s	PLUG, SHORTING
Q1	8-729-900-53	s	TRANSISTOR DTC114EK
Q2	8-729-900-53	s	TRANSISTOR DTC114EK
Q3	8-729-900-53	s	TRANSISTOR DTC114EK
Q4	8-729-900-53	s	TRANSISTOR DTC114EK
Q5	8-729-900-53	s	TRANSISTOR DTC114EK
Q6	8-729-900-53	s	TRANSISTOR DTC114EK
Q7	8-729-900-53	s	TRANSISTOR DTC114EK
Q8	8-729-900-53	s	TRANSISTOR DTC114EK
Q9	8-729-900-53	s	TRANSISTOR DTC114EK
Q10	8-729-900-53	s	TRANSISTOR DTC114EK
Q11	8-729-900-53	s	TRANSISTOR DTC114EK
Q12	8-729-900-53	s	TRANSISTOR DTC114EK
Q13	8-729-900-53	s	TRANSISTOR DTC114EK
Q14	8-729-900-53	s	TRANSISTOR DTC114EK
Q15	8-729-900-53	s	TRANSISTOR DTC114EK
Q16	8-729-900-53	s	TRANSISTOR DTC114EK
Q17	8-729-900-53	s	TRANSISTOR DTC114EK
Q18	8-729-900-53	s	TRANSISTOR DTC114EK
Q19	8-729-900-53	s	TRANSISTOR DTC114EK
Q20	8-729-900-53	s	TRANSISTOR DTC114EK
Q21	8-729-900-53	s	TRANSISTOR DTC114EK
Q22	8-729-900-53	s	TRANSISTOR DTC114EK
Q23	8-729-900-53	s	TRANSISTOR DTC114EK
Q24	8-729-900-53	s	TRANSISTOR DTC114EK
Q25	8-729-900-53	s	TRANSISTOR DTC114EK
Q26	8-729-900-53	s	TRANSISTOR DTC114EK
Q27	8-729-900-53	s	TRANSISTOR DTC114EK
Q28	8-729-900-53	s	TRANSISTOR DTC114EK
Q29	8-729-900-53	s	TRANSISTOR DTC114EK
Q30	8-729-900-53	s	TRANSISTOR DTC114EK
Q31	8-729-900-53	s	TRANSISTOR DTC114EK
Q32	8-729-900-53	s	TRANSISTOR DTC114EK
Q33	8-729-900-53	s	TRANSISTOR DTC114EK
Q34	8-729-900-53	s	TRANSISTOR DTC114EK
Q35	8-729-900-53	s	TRANSISTOR DTC114EK
Q36	8-729-900-53	s	TRANSISTOR DTC114EK
Q37	8-729-900-53	s	TRANSISTOR DTC114EK
Q38	8-729-900-53	s	TRANSISTOR DTC114EK
R5	1-216-073-00	s	METAL, CHIP 10k 5% 1/10W
R7	1-216-065-00	s	METAL, CHIP 4.7k 5% 1/10W

NOTE : Please see page 22-42 for the parts that are not listed in the parts list.

(IF-276 BOARD(DVR-2000/2100))

Ref. No. or Q'ty	Part No.	SP	Description
R8	1-216-065-00	s	METAL, CHIP 4.7k 5% 1/10W
R9	1-216-065-00	s	METAL, CHIP 4.7k 5% 1/10W
R10	1-216-065-00	s	METAL, CHIP 4.7k 5% 1/10W
R11	1-216-065-00	s	METAL, CHIP 4.7k 5% 1/10W
R12	1-216-065-00	s	METAL, CHIP 4.7k 5% 1/10W
R13	1-216-065-00	s	METAL, CHIP 4.7k 5% 1/10W
R14	1-216-065-00	s	METAL, CHIP 4.7k 5% 1/10W
R15	1-216-065-00	s	METAL, CHIP 4.7k 5% 1/10W
R16	1-216-065-00	s	METAL, CHIP 4.7k 5% 1/10W
R17	1-216-089-00	s	METAL, CHIP 47k 5% 1/10W
R18	1-216-089-00	s	METAL, CHIP 47k 5% 1/10W
R20	1-216-073-00	s	METAL, CHIP 10k 5% 1/10W
R21	1-216-073-00	s	METAL, CHIP 10k 5% 1/10W
R22	1-216-073-00	s	METAL, CHIP 10k 5% 1/10W
R23	1-216-073-00	s	METAL, CHIP 10k 5% 1/10W
R24	1-216-073-00	s	METAL, CHIP 10k 5% 1/10W
R25	1-216-073-00	s	METAL, CHIP 10k 5% 1/10W
R26	1-216-073-00	s	METAL, CHIP 10k 5% 1/10W
R27	1-216-073-00	s	METAL, CHIP 10k 5% 1/10W
R28	1-216-073-00	s	METAL, CHIP 10k 5% 1/10W
R29	1-216-073-00	s	METAL, CHIP 10k 5% 1/10W
#R30	1-216-073-00	s	METAL, CHIP 10k 5% 1/10W
#R31	1-216-073-00	s	METAL, CHIP 10k 5% 1/10W
RB1	1-231-410-00	s	RESISTOR BLOCK 10kx8
RB2	1-231-410-00	s	RESISTOR BLOCK 10kx8
RB3	1-235-005-00	s	RESISTOR BLOCK 47kx8
RB4	1-235-005-00	s	RESISTOR BLOCK 47kx8
RB5	1-231-411-00	s	RESISTOR BLOCK 100kx8
RB6	1-231-410-00	s	RESISTOR BLOCK 10kx8
RB7	1-231-410-00	s	RESISTOR BLOCK 10kx8
RB8	1-231-410-00	s	RESISTOR BLOCK 10kx8
RB9	1-231-410-00	s	RESISTOR BLOCK 10kx8
RB10	1-231-410-00	s	RESISTOR BLOCK 10kx8
RB11	1-231-410-00	s	RESISTOR BLOCK 10kx8

LE-62 BOARD(DVR-2000/2100)

Ref. No. or Q'ty	Part No.	SP	Description
D1	8-719-123-69	s	DIODE SE310
D2	8-719-123-69	s	DIODE SE310
D3	8-719-123-69	s	DIODE SE310
D4	8-719-123-69	s	DIODE SE310
D5	8-719-123-69	s	DIODE SE310

NOTE : For the parts marked # in the parts list, refer to "Section 23 Changed Parts".

LE-77 BOARD(DVR-2000/2100)

Ref. No. or Q'ty	Part No.	SP	Description
1pc	1-639-137-11	o	PRINTED CIRCUIT BOARD, LE-77
CN370	1-506-487-11	o	CONNECTOR 8P, MALE
D1	8-719-955-25	s	DIODE PY5525S
D2	8-719-310-60	s	DIODE SEL1510C-C
D3	8-719-310-60	s	DIODE SEL1510C-C
D4	8-719-310-60	s	DIODE SEL1510C-C
R1	1-249-410-11	s	CARBON 270 5% 1/4W
S1	1-554-042-41	s	SWITCH, TACTILE, WITH LED

NOTE : Please see page 22-42 for the parts that are not listed in the parts list.

LE-78 BOARD(DVR-2000/2100/BKDV-2010)

Ref. No. or Q'ty	Part No.	SP	Description
1pc	A-6017-189-A	o	MOUNTED CIRCUIT BOARD, LE-78
12pcs	3-674-390-00	s	HOLDER (B), LED
CN516	1-580-542-11	o	CONNECTOR LY 26P, MALE
CN517	1-506-483-21	o	CONNECTOR, 4P, MALE
D1	8-719-918-88	s	DIODE 1SS198
D2	8-719-918-88	s	DIODE 1SS198
D3	8-719-918-88	s	DIODE 1SS198
D4	8-719-918-88	s	DIODE 1SS198
D5	8-719-918-88	s	DIODE 1SS198
D6	8-719-918-88	s	DIODE 1SS198
D7	8-719-918-88	s	DIODE 1SS198
D8	8-719-918-88	s	DIODE 1SS198
D9	8-719-918-88	s	DIODE 1SS198
D10	8-719-918-88	s	DIODE 1SS198
D11	8-719-918-88	s	DIODE 1SS198
D12	8-719-918-88	s	DIODE 1SS198
D13	8-719-310-60	s	DIODE SEL1510C-C
D14	8-719-905-56	s	LED EBR5504S, RED
D15	8-719-905-56	s	LED EBR5504S, RED
D16	8-719-310-60	s	DIODE SEL1510C-C
D17	8-719-955-04	s	LED PY5504S-1, YEL
D18	8-719-918-87	s	DIODE BG5531K
D19	8-719-905-31	s	DIODE PY5531K
D20	8-719-915-45	s	LED SLP162B, RED
D21	8-719-901-66	s	DIODE LT-9200N
D22	8-719-901-66	s	DIODE LT-9200N
Q1	8-729-900-53	s	TRANSISTOR DTC114EK
Q2	8-729-900-53	s	TRANSISTOR DTC114EK
Q3	8-729-900-53	s	TRANSISTOR DTC114EK
Q4	8-729-900-53	s	TRANSISTOR DTC114EK
R1	1-247-820-11	s	CARBON 360 5% 1/4W
R2	1-247-820-11	s	CARBON 360 5% 1/4W
R3	1-247-820-11	s	CARBON 360 5% 1/4W
R4	1-247-820-11	s	CARBON 360 5% 1/4W
R5	1-247-818-11	s	CARBON 300 5% 1/4W
R6	1-249-414-11	s	CARBON 560 5% 1/4W
R7	1-249-414-11	s	CARBON 560 5% 1/4W
R8	1-247-818-11	s	CARBON 300 5% 1/4W
#R9	1-247-816-11	s	CARBON 240 5% 1/4W
R10	1-249-406-11	s	CARBON 120 5% 1/4W
R11	1-249-406-11	s	CARBON 120 5% 1/4W
R12	1-249-409-11	s	CARBON 220 5% 1/4W
R13	1-247-818-11	s	CARBON 300 5% 1/4W
R14	1-247-818-11	s	CARBON 300 5% 1/4W
R15	1-247-818-11	s	CARBON 300 5% 1/4W
R16	1-247-818-11	s	CARBON 300 5% 1/4W
S1	1-572-828-11	s	SWITCH, PUSH
S2	1-572-828-11	s	SWITCH, PUSH
S3	1-572-828-11	s	SWITCH, PUSH
S4	1-572-827-11	s	SWITCH, PUSH

NOTE : For the parts marked # in the parts list, refer to "Section 23 Changed Parts".

MA-39 BOARD(DVR-2000/2100)

MA-39 board is used for UC and EK models.

Ref. No. or Q'ty	Part No.	SP	Description
#1pc	1-639-129-12	o	PRINTED CIRCUIT BOARD, MA-39
CN907	1-565-282-11	o	CONNECTOR, XLR 3P, FEMALE
CN908	1-565-281-11	o	CONNECTOR, XLR 3P, MALE
CN909	1-565-281-11	o	CONNECTOR, XLR 3P, MALE
CN910	1-565-281-11	o	CONNECTOR, XLR 3P, MALE
CN911	1-565-282-11	o	CONNECTOR, XLR 3P, FEMALE
CN912	1-565-281-11	o	CONNECTOR, XLR 3P, MALE
CN954	1-506-639-11	o	CONNECTOR, PS 20P, MALE

MA-50 BOARD(DVR-2000/2100)

MA-50 board is used for J model.

Ref. No. or Q'ty	Part No.	SP	Description
#1pc	1-641-164-12	o	PRINTED CIRCUIT BOARD, MA-50
C1	1-163-037-11	s	CERAMIC, CHIP 0.022uF 10% 25V
CN907	1-565-281-11	o	CONNECTOR, XLR 3P, MALE
CN908	1-565-282-11	o	CONNECTOR, XLR 3P, FEMALE
CN909	1-565-282-11	o	CONNECTOR, XLR 3P, FEMALE
CN910	1-565-282-11	o	CONNECTOR, XLR 3P, FEMALE
CN911	1-565-281-11	o	CONNECTOR, XLR 3P, MALE
CN912	1-565-282-11	o	CONNECTOR, XLR 3P, FEMALE
CN954	1-506-639-11	o	CONNECTOR, PS 20P, MALE

MB-285 BOARD(DVR-2000/2100)

Ref. No. or Q'ty	Part No.	SP	Description
1pc	A-6026-168-A	o	MOUNTED CIRCUIT BOARD, MB-285
#8pcs	3-683-631-01	o	CLAMP
28pcs	7-622-207-05	s	N 2.6, TYPE 2
28pcs	7-628-254-20	s	SCREW, +PS 2.6x8
CN701	1-563-337-11	s	CONNECTOR, DIN 96P, FEMALE
CN702	1-563-335-11	s	CONNECTOR, DIN 48P, FEMALE
CN703	1-563-335-11	s	CONNECTOR, DIN 48P, FEMALE
CN704	1-563-337-11	s	CONNECTOR, DIN 96P, FEMALE
CN705	1-563-335-11	s	CONNECTOR, DIN 48P, FEMALE
CN706	1-563-335-11	s	CONNECTOR, DIN 48P, FEMALE
CN707	1-563-337-11	s	CONNECTOR, DIN 96P, FEMALE
CN708	1-563-335-11	s	CONNECTOR, DIN 48P, FEMALE
CN709	1-563-335-11	s	CONNECTOR, DIN 48P, FEMALE
CN710	1-563-335-11	s	CONNECTOR, DIN 48P, FEMALE
CN711	1-563-335-11	s	CONNECTOR, DIN 48P, FEMALE
CN712	1-563-337-11	s	CONNECTOR, DIN 96P, FEMALE
CN713	1-573-509-11	o	CONNECTOR,TX(S.S)(PC BOARD)80P
CN714	1-506-644-11	o	CONNECTOR, PS 30P, MALE
CN715	1-506-628-11	o	CONNECTOR, PS 26P, MALE
CN716	1-506-635-11	o	CONNECTOR, PS 12P MALE
CN718	1-563-335-11	s	CONNECTOR, DIN 48P, FEMALE
CN720	1-506-620-11	o	CONNECTOR, PS 10P, MALE
CN721	1-506-631-11	o	CONNECTOR, PS 4P, MALE
CN722	1-506-473-11	o	CONNECTOR 8P, MALE
CN723	1-506-623-11	o	CONNECTOR, PS 16P, MALE
CN724	1-506-631-11	o	CONNECTOR, PS 4P, MALE
CN725	1-506-626-11	o	CONNECTOR, PS 22P, MALE
CN726	1-506-629-11	o	CONNECTOR, PS 28P, MALE
CN727	1-563-335-11	s	CONNECTOR, DIN 48P, FEMALE
CN738	1-573-511-11	o	CONNECTOR, TX 100P, MALE
CN739	1-573-511-11	o	CONNECTOR, TX 100P, MALE

NOTE : Please see page 22-42 for the parts that are not listed in the parts list.

NOTE : For the parts marked # in the parts list, refer to "Section 23 Changed Parts".

MB-286 BOARD(DVR-2000/2100)

Ref. No. or Q'ty	Part No.	SP	Description
1pc	A-6026-169-A	o	MOUNTED CIRCUIT BOARD, MB-286
4pcs	7-622-205-05	s	NUT M2 TYPE2
26pcs	7-622-207-05	s	N 2.6, TYPE 2
4pcs	7-628-253-50	s	SCREW, +PS 2x12
26pcs	7-628-254-20	s	SCREW, +PS 2.6x8
CN501	1-565-206-11	s	CONNECTOR, DIN 128P, FEMALE
CN502	1-565-206-11	s	CONNECTOR, DIN 128P, FEMALE
CN503	1-565-206-11	s	CONNECTOR, DIN 128P, FEMALE
CN504	1-565-206-11	s	CONNECTOR, DIN 128P, FEMALE
CN505	1-565-206-11	s	CONNECTOR, DIN 128P, FEMALE
CN506	1-565-206-11	s	CONNECTOR, DIN 128P, FEMALE
CN507	1-565-206-11	s	CONNECTOR, DIN 128P, FEMALE
CN508	1-565-206-11	s	CONNECTOR, DIN 128P, FEMALE
CN509	1-565-206-11	s	CONNECTOR, DIN 128P, FEMALE
CN510	1-565-206-11	s	CONNECTOR, DIN 128P, FEMALE
CN511	1-565-206-11	s	CONNECTOR, DIN 128P, FEMALE
CN512	1-565-206-11	s	CONNECTOR, DIN 128P, FEMALE
CN513	1-563-335-11	s	CONNECTOR, DIN 48P, FEMALE
CN514	1-569-379-11	o	CONNECTOR, TX 40P, MALE
CN515	1-565-689-11	o	CONNECTOR, TX 60P, MALE
CN516	1-569-379-11	o	CONNECTOR, TX 40P, MALE
CN517	1-506-644-11	o	CONNECTOR, PS 30P, MALE
CN518	1-506-639-11	o	CONNECTOR, PS 20P, MALE
CN519	1-569-379-11	o	CONNECTOR, TX 40P, MALE
CN520	1-506-632-11	o	CONNECTOR, PS 6P, MALE
CN521	1-506-634-11	o	CONNECTOR, PS 10P, MALE
CN522	1-506-634-11	o	CONNECTOR, PS 10P, MALE
CN524	1-506-639-11	o	CONNECTOR, PS 20P, MALE
CN525	1-506-634-11	o	CONNECTOR, PS 10P, MALE
CN526	1-506-631-11	o	CONNECTOR, PS 4P, MALE
CN528	1-506-644-11	o	CONNECTOR, PS 30P, MALE
CN529	1-506-637-11	o	CONNECTOR, PS 16P, MALE
CN530	1-506-641-11	o	CONNECTOR, PS 24P
CN531	1-506-641-11	o	CONNECTOR, PS 24P
CN532	1-506-702-11	o	CONNECTOR, ILG 3P, MALE
CN533	1-506-702-11	o	CONNECTOR, ILG 3P, MALE
CN534	1-506-702-11	o	CONNECTOR, ILG 3P, MALE
CN535	1-506-702-11	o	CONNECTOR, ILG 3P, MALE
CN538	1-569-212-11	o	CONNECTOR, TX 100P, FEMALE
CN539	1-569-212-11	o	CONNECTOR, TX 100P, FEMALE
CN540	1-506-633-11	o	CONNECTOR, PS 8P
CN721	1-565-086-11	o	CONNECTOR, 15P, MALE

NOTE : Please see page 22-42 for the parts that are not listed in the parts list.

MD-71 BOARD(DVR-2000/2100)

Ref. No. or Q'ty	Part No.	SP	Description
1pc	A-6023-073-A	o	MOUNTED CIRCUIT BOARD, MD-71
20pcs	2-832-007-00	s	BUSHING (K), INSULATING
1pc	3-170-632-01	o	SHEET (A), RADIATION
1pc	3-170-631-01	o	SHEET (B), RADIATION
10pcs	3-170-630-01	o	SHEET (C), RADIATION
3pcs	3-170-629-01	o	SHEET (D), RADIATION
1pc	3-171-894-31	o	LABEL (V), SERIAL NUMBER
2pcs	3-673-249-11	o	LEVER, PC BOARD
#24pcs	7-621-759-65	s	SCREW, +PSW 2.6x8
#10pcs	7-621-759-75	s	SCREW, +PSW 2.6x10
4pcs	7-682-948-01	s	SCREW, +PSW 3x8
2pcs	7-628-254-10	s	SCREW, +PS 2.6x6
6pcs	7-682-947-01	s	SCREW, +PSW 3x6
2pcs	7-626-320-11	s	PIN, SPRING 3X8
6pcs	7-685-547-14	s	SCREW, +BVTP 3x10 TYPE2 N-S
C1	1-126-786-11	s	ELECT 22uF 20% 25V
C2	1-126-096-11	s	ELECT 10uF 20% 35V
#C3	1-126-786-11	s	ELECT 47uF 20% 16V
C4	1-135-092-21	s	TANTALUM, CHIP 3.3uF 10% 16V
C5	1-135-092-21	s	TANTALUM, CHIP 3.3uF 10% 16V
C6	1-164-097-11	s	CERAMIC 0.022uF 50V
C7	1-161-896-11	s	CERAMIC 0.22uF 50V
C8	1-131-377-00	s	TANTALUM 10uF 10% 10V
#C9	1-126-923-11	s	ELECT 220uF 20% 10V
C10	1-162-801-11	s	CERAMIC 0.039uF 10% 50V
#C11	1-126-923-11	s	ELECT 220uF 20% 10V
C12	1-161-485-00	s	CERAMIC 0.1uF 50V
C13	1-126-096-11	s	ELECT 10uF 20% 35V
C14	1-126-096-11	s	ELECT 10uF 20% 35V
#C15	1-126-786-11	s	ELECT 47uF 20% 16V
C16	1-126-147-11	s	ELECT 120uF 20% 63V
C17	1-126-096-11	s	ELECT 10uF 20% 35V
C18	1-126-111-11	s	ELECT 3.3uF 20% 100V
C19	1-126-112-11	s	ELECT 5.6uF 20% 100V
C20	1-126-147-11	s	ELECT 120uF 20% 63V
C21	1-126-147-11	s	ELECT 120uF 20% 63V
C22	1-126-147-11	s	ELECT 120uF 20% 63V
C23	1-126-111-11	s	ELECT 3.3uF 20% 100V
C24	1-126-112-11	s	ELECT 5.6uF 20% 100V
C25	1-161-896-11	s	CERAMIC 0.22uF 50V
#C26	1-126-923-11	s	ELECT 220uF 20% 10V
#C27	1-126-923-11	s	ELECT 220uF 20% 10V
#C28	1-126-923-11	s	ELECT 220uF 20% 10V
#C29	1-126-923-11	s	ELECT 220uF 20% 10V
C30	1-161-896-11	s	CERAMIC 0.22uF 50V
C31	1-126-147-11	s	ELECT 120uF 20% 63V
C32	1-126-111-11	s	ELECT 3.3uF 20% 100V
C33	1-126-112-11	s	ELECT 5.6uF 20% 100V
C34	1-126-147-11	s	ELECT 120uF 20% 63V
#C35	1-111-056-11	s	ELECT 82uF 20% 25V
C36	1-164-097-11	s	CERAMIC 0.022uF 50V
C37	1-126-933-11	s	ELECT 100uF 20% 10V
C38	1-126-933-11	s	ELECT 100uF 20% 10V
C39	1-164-097-11	s	CERAMIC 0.022uF 50V
C40	1-164-097-11	s	CERAMIC 0.022uF 50V
C41	1-164-097-11	s	CERAMIC 0.022uF 50V
C42	1-164-097-11	s	CERAMIC 0.022uF 50V
C43	1-164-097-11	s	CERAMIC 0.022uF 50V
C44	1-164-097-11	s	CERAMIC 0.022uF 50V

NOTE : For the parts marked # in the parts list, refer to "Section 23 Changed Parts".

(MD-71 BOARD(DVR-2000/2100))

Ref. No. or Q'ty	Part No.	SP	Description
C45	1-126-096-11	s	ELECT 10uF 20% 35V
C46	1-164-097-11	s	CERAMIC 0.022uF 50V
C47	1-164-097-11	s	CERAMIC 0.022uF 50V
C48	1-164-097-11	s	CERAMIC 0.022uF 50V
C49	1-104-664-11	s	ELECT 47uF 20% 25V
C50	1-164-097-11	s	CERAMIC 0.022uF 50V
C51	1-126-163-11	s	ELECT 4.7uF 20% 50V
C52	1-126-163-11	s	ELECT 4.7uF 20% 50V
C53	1-126-163-11	s	ELECT 4.7uF 20% 50V
C54	1-126-163-11	s	ELECT 4.7uF 20% 50V
C55	1-126-163-11	s	ELECT 4.7uF 20% 50V
C56	1-104-664-11	s	ELECT 47uF 20% 25V
C57	1-126-796-11	s	ELECT 22uF 20% 25V
C58	1-126-163-11	s	ELECT 4.7uF 20% 50V
C59	1-104-664-11	s	ELECT 47uF 20% 25V
C60	1-126-796-11	s	ELECT 22uF 20% 25V
C61	1-163-121-00	s	CERAMIC, CHIP 150pF 5% 50V
C62	1-163-121-00	s	CERAMIC, CHIP 150pF 5% 50V
C63	1-163-121-00	s	CERAMIC, CHIP 150pF 5% 50V
C64	1-163-121-00	s	CERAMIC, CHIP 150pF 5% 50V
C65	1-164-232-11	s	CERAMIC, CHIP 0.01uF 10% 100V
C66	1-164-232-11	s	CERAMIC, CHIP 0.01uF 10% 100V
C67	1-164-232-11	s	CERAMIC, CHIP 0.01uF 10% 100V
C68	1-162-587-11	s	CERAMIC, CHIP 0.039uF 10% 25V
C73	1-162-587-11	s	CERAMIC, CHIP 0.039uF 10% 25V
C74	1-162-587-11	s	CERAMIC, CHIP 0.039uF 10% 25V
C75	1-164-232-11	s	CERAMIC, CHIP 0.01uF 10% 100V
C76	1-164-232-11	s	CERAMIC, CHIP 0.01uF 10% 100V
C77	1-164-232-11	s	CERAMIC, CHIP 0.01uF 10% 100V
C78	1-164-232-11	s	CERAMIC, CHIP 0.01uF 10% 100V
C79	1-164-232-11	s	CERAMIC, CHIP 0.01uF 10% 100V
C80	1-163-251-11	s	CERAMIC, CHIP 100PF 5% 50V
C81	1-164-232-11	s	CERAMIC, CHIP 0.01uF 10% 100V
C82	1-164-232-11	s	CERAMIC, CHIP 0.01uF 10% 100V
C83	1-164-232-11	s	CERAMIC, CHIP 0.01uF 10% 100V
C84	1-164-232-11	s	CERAMIC, CHIP 0.01uF 10% 100V
C85	1-162-587-11	s	CERAMIC, CHIP 0.039uF 10% 25V
C86	1-162-587-11	s	CERAMIC, CHIP 0.039uF 10% 25V
C87	1-162-587-11	s	CERAMIC, CHIP 0.039uF 10% 25V
C88	1-164-232-11	s	CERAMIC, CHIP 0.01uF 10% 100V
C89	1-164-232-11	s	CERAMIC, CHIP 0.01uF 10% 100V
C90	1-164-232-11	s	CERAMIC, CHIP 0.01uF 10% 100V
C91	1-164-232-11	s	CERAMIC, CHIP 0.01uF 10% 100V
C92	1-164-232-11	s	CERAMIC, CHIP 0.01uF 10% 100V
C93	1-164-232-11	s	CERAMIC, CHIP 0.01uF 10% 100V
C94	1-164-232-11	s	CERAMIC, CHIP 0.01uF 10% 100V
C95	1-163-016-00	s	CERAMIC CHIP 0.0039MF 10% 50V
C96	1-164-232-11	s	CERAMIC, CHIP 0.01uF 10% 100V
C97	1-164-232-11	s	CERAMIC, CHIP 0.01uF 10% 100V
C98	1-163-037-11	s	CERAMIC, CHIP 0.022uF 10% 25V
C99	1-163-989-11	s	CERAMIC, CHIP 0.033uF 10% 25V
C100	1-163-016-00	s	CERAMIC CHIP 0.0039MF 10% 50V
C101	1-164-232-11	s	CERAMIC, CHIP 0.01uF 10% 100V
C102	1-163-016-00	s	CERAMIC CHIP 0.0039MF 10% 50V
C103	1-164-232-11	s	CERAMIC, CHIP 0.01uF 10% 100V
C104	1-163-037-11	s	CERAMIC, CHIP 0.022uF 10% 25V
C105	1-163-989-11	s	CERAMIC, CHIP 0.033uF 10% 25V
C106	1-164-232-11	s	CERAMIC, CHIP 0.01uF 10% 100V
C107	1-164-232-11	s	CERAMIC, CHIP 0.01uF 10% 100V
C108	1-164-232-11	s	CERAMIC, CHIP 0.01uF 10% 100V

NOTE : Please see page 22-42 for the parts that are not listed in the parts list.

(MD-71 BOARD(DVR-2000/2100))

Ref. No. or Q'ty	Part No.	SP	Description
C109	1-164-232-11	s	CERAMIC, CHIP 0.01uF 10% 100V
C110	1-164-232-11	s	CERAMIC, CHIP 0.01uF 10% 100V
C111	1-164-232-11	s	CERAMIC, CHIP 0.01uF 10% 100V
C112	1-164-232-11	s	CERAMIC, CHIP 0.01uF 10% 100V
C113	1-164-232-11	s	CERAMIC, CHIP 0.01uF 10% 100V
CN710	1-506-746-11	s	CONNECTOR, DIN 48P, MALE
CN711	1-506-746-11	s	CONNECTOR, DIN 48P, MALE
CN712	1-506-748-11	s	CONNECTOR, DIN 96P, MALE
CNI27	1-540-080-11	s	SOCKET, IC (IC113) 68P
#CR3	1-235-966-21	s	ENCAPSULATED COMPONENTS, CR
#CR4	1-235-966-21	s	ENCAPSULATED COMPONENTS, CR
D1	8-719-200-02	s	DIODE 10E2
D2	8-719-200-02	s	DIODE 10E2
D3	1-806-660-11	s	DIODE ESAB85-009
D4	1-806-660-11	s	DIODE ESAB85-009
#D5	8-719-200-02	s	DIODE 10E2
#D6	8-719-200-02	s	DIODE 10E2
#D7	8-719-200-02	s	DIODE 10E2
D8	1-806-660-11	s	DIODE ESAB85-009
D9	8-719-200-02	s	DIODE 10E2
#D10	8-719-200-02	s	DIODE 10E2
#D11	8-719-200-02	s	DIODE 10E2
#D12	8-719-200-02	s	DIODE 10E2
D13	8-719-903-16	s	DIODE ESAC85-009
D14	8-719-903-16	s	DIODE ESAC85-009
D15	8-719-903-16	s	DIODE ESAC85-009
D16	8-719-903-16	s	DIODE ESAC85-009
D17	8-719-903-16	s	DIODE ESAC85-009
D18	8-719-903-16	s	DIODE ESAC85-009
#D19	8-719-200-02	s	DIODE 10E2
#D20	8-719-200-02	s	DIODE 10E2
#D21	8-719-200-02	s	DIODE 10E2
D22	8-719-200-02	s	DIODE 10E2
D23	8-719-948-47	s	DIODE HSM88AS
D24	8-719-948-47	s	DIODE HSM88AS
D25	8-719-948-47	s	DIODE HSM88AS
D26	8-719-107-34	s	DIODE RD22M-B2
D27	8-719-948-47	s	DIODE HSM88AS
D28	8-719-105-82	s	DIODE RD5.1M-B2
D29	8-719-800-76	s	DIODE 1SS226
D30	8-719-800-76	s	DIODE 1SS226
D31	8-719-800-76	s	DIODE 1SS226
D32	8-719-800-76	s	DIODE 1SS226
FB1	1-535-178-00	s	BEAD, FERRITE
IC1	8-759-085-67	s	IC LM339NS
IC2	8-759-510-71	s	IC BA10358F
IC3	8-759-510-71	s	IC BA10358F
IC4	1-567-796-11	s	OSCILLATOR, CRYSTAL 14.7456MHz
IC5	8-759-926-77	s	IC SN74HC541NS
IC6	8-759-947-86	s	IC CXD1317Q
IC7	8-759-938-68	s	IC CXD1095Q
IC8	8-759-908-92	s	IC TL084CNS
IC9	8-759-908-92	s	IC TL084CNS
IC10	8-759-009-06	s	IC MC14052BF
IC11	8-759-009-51	s	IC MC14538BF
IC12	8-759-925-72	s	IC SN74HC02NS
IC13	8-759-925-76	s	IC SN74HC08NS
IC14	8-759-510-71	s	IC BA10358F
IC15	8-759-510-71	s	IC BA10358F

NOTE : For the parts marked # in the parts list, refer to "Section 23 Changed Parts".

(MD-71 BOARD(DVR-2000/2100))

Ref. No. or Q'ty	Part No.	SP	Description
IC16	8-759-510-71	s	IC BA10358F
IC17	8-759-510-71	s	IC BA10358F
#IC18	1-810-270-11	s	IC BP-026
#IC19	1-810-270-11	s	IC BP-026
IC20	8-741-132-00	s	IC BX1320
IC21	8-759-926-74	s	IC SN74HC393NS
IC22	8-759-908-92	s	IC TL084CNS
IC23	8-759-947-86	s	IC CXD1317Q
IC24	8-759-926-58	s	IC SN74HC352NS
IC25	8-759-510-71	s	IC BA10358F
IC26	8-759-510-71	s	IC BA10358F
IC27	8-759-321-99	s	IC HD63140CP
IC28	8-759-925-81	s	IC SN74HC20ANS
IC29	8-759-926-18	s	IC SN74HC157ANS
IC30	8-759-925-74	s	IC TC74HC04NS
IC31	8-759-926-11	s	IC SN74HC138NS
IC32	8-759-926-18	s	IC SN74HC157ANS
IC33	8-759-927-18	s	IC SN74HCT541NS
IC34	8-759-208-51	s	IC TA7257P
IC35	8-741-132-10	s	IC BX1321
IC36	8-741-132-10	s	IC BX1321
IC37	8-759-927-15	s	IC SN74HCT245NS
IC38	8-759-927-18	s	IC SN74HCT541NS
IC39	8-759-510-71	s	IC BA10358F
IC40	8-759-510-71	s	IC BA10358F
IC41	8-759-510-71	s	IC BA10358F
IC42	8-759-208-51	s	IC TA7257P
IC43	8-759-208-51	s	IC TA7257P
IC44	8-759-996-38	s	IC FT6022D
IC45	8-759-208-51	s	IC TA7257P
IC46	8-759-208-45	s	IC MP6901
IC47	8-759-996-41	s	IC FT6022
IC48	8-759-009-03	s	IC MC14049UBF
IC49	8-759-250-20	s	IC TC5020BP
L1	1-413-090-00	s	COIL, SN 110uH
#L2	1-460-086-11	s	COIL, CHOKE 10uH
L3	1-413-090-00	s	COIL, SN 110uH
#L4	1-460-086-11	s	COIL, CHOKE 10uH
#L5	1-460-086-11	s	COIL, CHOKE 10uH
L6	1-412-019-11	s	COIL, CHOKE
#L7	1-414-142-11	s	INDUCTOR 1uH
L8	1-408-299-00	s	COIL, CHOKE
L9	1-408-299-00	s	COIL, CHOKE
#L10	1-414-142-11	s	INDUCTOR 1uH
L11	1-412-019-11	s	COIL, CHOKE
#L12	1-460-086-11	s	COIL, CHOKE 10uH
#L13	1-460-086-11	s	COIL, CHOKE 10uH
#L14	1-460-086-11	s	COIL, CHOKE 10uH
#L15	1-460-086-11	s	COIL, CHOKE 10uH
#L16	1-460-086-11	s	COIL, CHOKE 10uH
#L17	1-460-086-11	s	COIL, CHOKE 10uH
Q1	8-729-111-29	s	TRANSISTOR 2SD1616A-K
Q2	8-729-140-96	s	TRANSISTOR 2SD774-4
Q3	8-729-601-55	s	TRANSISTOR 2SA1283-D
Q4	8-729-601-55	s	TRANSISTOR 2SA1283-D
Q5	8-729-143-30	s	TRANSISTOR 2SD1691-L
Q6	8-729-117-11	s	TRANSISTOR 2SB1151-L
Q7	8-729-304-36	s	TRANSISTOR 2SK428

NOTE : Please see page 22-42 for the parts that are not listed in the parts list.

(MD-71 BOARD(DVR-2000/2100))

Ref. No. or Q'ty	Part No.	SP	Description
Q8	8-729-304-35	s	TRANSISTOR 2SJ122
Q9	8-729-304-35	s	TRANSISTOR 2SJ122
Q10	8-729-102-57	s	TRANSISTOR 2SC3012
Q11	8-729-102-57	s	TRANSISTOR 2SC3012
Q12	8-729-102-57	s	TRANSISTOR 2SC3012
Q13	8-729-102-57	s	TRANSISTOR 2SC3012
Q14	8-729-304-35	s	TRANSISTOR 2SJ122
Q15	8-729-601-55	s	TRANSISTOR 2SA1283-D
Q16	8-729-601-55	s	TRANSISTOR 2SA1283-D
Q17	8-729-601-55	s	TRANSISTOR 2SA1283-D
Q18	8-729-601-55	s	TRANSISTOR 2SA1283-D
Q19	8-729-304-35	s	TRANSISTOR 2SJ122
Q20	8-729-804-86	s	TRANSISTOR 2SB1142-S
#Q21	8-729-112-68	s	TRANSISTOR 2SD986-L
Q22	8-729-304-35	s	TRANSISTOR 2SJ122
Q23	8-729-304-35	s	TRANSISTOR 2SJ122
Q24	8-729-304-35	s	TRANSISTOR 2SJ122
Q25	8-729-304-35	s	TRANSISTOR 2SJ122
Q26	8-729-304-35	s	TRANSISTOR 2SJ122
Q27	8-729-304-35	s	TRANSISTOR 2SJ122
Q28	8-729-140-97	s	TRANSISTOR 2SB734-3
Q29	8-729-102-57	s	TRANSISTOR 2SC3012
Q30	8-729-102-57	s	TRANSISTOR 2SC3012
Q31	8-729-102-57	s	TRANSISTOR 2SC3012
Q32	8-729-102-57	s	TRANSISTOR 2SC3012
Q33	8-729-102-57	s	TRANSISTOR 2SC3012
Q34	8-729-102-57	s	TRANSISTOR 2SC3012
Q35	8-729-901-00	s	TRANSISTOR DTC124EK
Q36	8-729-901-03	s	TRANSISTOR DTC144WK
Q37	8-729-140-37	s	TRANSISTOR 2SC3734-B24
Q38	8-729-105-36	s	TRANSISTOR 2SC3360-N15
Q39	8-729-901-03	s	TRANSISTOR DTC144WK
Q40	8-729-140-37	s	TRANSISTOR 2SC3734-B24
Q41	8-729-105-36	s	TRANSISTOR 2SC3360-N15
Q42	8-729-140-37	s	TRANSISTOR 2SC3734-B24
Q43	8-729-140-31	s	TRANSISTOR 2SA1461-Y23
Q44	8-729-900-53	s	TRANSISTOR DTC114EK
Q45	8-729-901-00	s	TRANSISTOR DTC124EK
Q46	8-729-901-00	s	TRANSISTOR DTC124EK
Q47	8-729-901-00	s	TRANSISTOR DTC124EK
Q48	8-729-140-37	s	TRANSISTOR 2SC3734-B24
Q49	8-729-901-03	s	TRANSISTOR DTC144WK
Q50	8-729-105-36	s	TRANSISTOR 2SC3360-N15
Q51	8-729-105-36	s	TRANSISTOR 2SC3360-N15
Q52	8-729-140-37	s	TRANSISTOR 2SC3734-B24
Q53	8-729-901-03	s	TRANSISTOR DTC144WK
Q54	8-729-140-37	s	TRANSISTOR 2SC3734-B24
Q55	8-729-105-36	s	TRANSISTOR 2SC3360-N15
Q56	8-729-105-36	s	TRANSISTOR 2SC3360-N15
Q57	8-729-901-03	s	TRANSISTOR DTC144WK
Q58	8-729-140-37	s	TRANSISTOR 2SC3734-B24
Q59	8-729-901-03	s	TRANSISTOR DTC144WK
Q60	8-729-901-00	s	TRANSISTOR DTC124EK
Q61	8-729-901-00	s	TRANSISTOR DTC124EK
Q62	8-729-901-00	s	TRANSISTOR DTC124EK
Q63	8-729-901-00	s	TRANSISTOR DTC124EK
Q64	8-729-140-31	s	TRANSISTOR 2SA1461-Y23
Q65	8-729-140-31	s	TRANSISTOR 2SA1461-Y23
Q66	8-729-901-00	s	TRANSISTOR DTC124EK

NOTE : For the parts marked # in the parts list, refer to "Section 23 Changed Parts".

(MD-71 BOARD(DVR-2000/2100))

Ref. No. or Q'ty	Part No.	SP	Description
Q67	8-729-901-00	s	TRANSISTOR DTC124EK
Q68	8-729-901-00	s	TRANSISTOR DTC124EK
Q69	8-729-901-00	s	TRANSISTOR DTC124EK
R1	1-260-090-11	s	CARBON 180 5% 1/2W
R2	1-205-994-11	s	WIREWOUND 3.3 5% 10W
R3	1-205-995-11	s	WIREWOUND 6.8 5% 10W
R4	1-249-387-11	s	CARBON 3.3 5% 1/4W
R5	1-205-994-11	s	WIREWOUND 3.3 5% 10W
R6	1-205-995-11	s	WIREWOUND 6.8 5% 10W
R7	1-216-407-11	s	METAL 0.68 5% 5W
R8	1-216-407-11	s	METAL 0.68 5% 5W
R9	1-216-407-11	s	METAL 0.68 5% 5W
R10	1-216-407-11	s	METAL 0.68 5% 5W
R11	1-216-407-11	s	METAL 0.68 5% 5W
R12	1-216-407-11	s	METAL 0.68 5% 5W
R13	1-249-421-11	s	CARBON 2.2k 5% 1/4W
R14	1-249-421-11	s	CARBON 2.2k 5% 1/4W
R15	1-249-421-11	s	CARBON 2.2k 5% 1/4W
R16	1-260-079-11	s	CARBON 22 5% 1/2W
R17	1-260-079-11	s	CARBON 22 5% 1/2W
R18	1-216-381-11	s	METAL 0.22 5% 3W
R19	1-249-431-11	s	CARBON 15k 5% 1/4W
R20	1-260-079-11	s	CARBON 22 5% 1/2W
R21	1-260-079-11	s	CARBON 22 5% 1/2W
R22	1-260-079-11	s	CARBON 22 5% 1/2W
R23	1-260-079-11	s	CARBON 22 5% 1/2W
R24	1-260-087-11	s	CARBON 100 5% 1/2W
R25	1-216-381-11	s	METAL 0.22 5% 3W
R26	1-216-381-11	s	METAL 0.22 5% 3W
R27	1-216-381-11	s	METAL 0.22 5% 3W
R28	1-216-121-00	s	METAL, CHIP 1M 5% 1/10W
R29	1-216-073-00	s	METAL, CHIP 10k 5% 1/10W
R30	1-216-073-00	s	METAL, CHIP 10k 5% 1/10W
R31	1-216-121-00	s	METAL, CHIP 1M 5% 1/10W
R38	1-216-121-00	s	METAL, CHIP 1M 5% 1/10W
R39	1-216-073-00	s	METAL, CHIP 10k 5% 1/10W
R40	1-216-073-00	s	METAL, CHIP 10k 5% 1/10W
R41	1-216-121-00	s	METAL, CHIP 1M 5% 1/10W
R49	1-216-065-00	s	METAL, CHIP 4.7k 5% 1/10W
R53	1-216-001-00	s	METAL, CHIP 10 5% 1/10W
R56	1-216-033-00	s	METAL, CHIP 220 5% 1/10W
R57	1-216-105-00	s	METAL, CHIP 220k 5% 1/10W
R58	1-216-105-00	s	METAL, CHIP 220k 5% 1/10W
R59	1-216-105-00	s	METAL, CHIP 220k 5% 1/10W
R60	1-216-105-00	s	METAL, CHIP 220k 5% 1/10W
R61	1-216-105-00	s	METAL, CHIP 220k 5% 1/10W
R62	1-216-105-00	s	METAL, CHIP 220k 5% 1/10W
R63	1-216-105-00	s	METAL, CHIP 220k 5% 1/10W
R75	1-216-111-00	s	METAL, CHIP 390k 5% 1/10W
R78	1-216-111-00	s	METAL, CHIP 390k 5% 1/10W
R80	1-216-081-00	s	METAL, CHIP 22k 5% 1/10W
R81	1-216-073-00	s	METAL, CHIP 10k 5% 1/10W
R82	1-216-081-00	s	METAL, CHIP 22k 5% 1/10W
R83	1-216-073-00	s	METAL, CHIP 10k 5% 1/10W
R84	1-216-073-00	s	METAL, CHIP 10k 5% 1/10W
R85	1-216-065-00	s	METAL, CHIP 4.7k 5% 1/10W
R86	1-216-089-00	s	METAL, CHIP 47k 5% 1/10W
R87	1-216-059-00	s	METAL, CHIP 2.7k 5% 1/10W

NOTE : Please see page 22-42 for the parts that are not listed in the parts list.

(MD-71 BOARD(DVR-2000/2100))

Ref. No. or Q'ty	Part No.	SP	Description
R88	1-216-089-00	s	METAL, CHIP 47k 5% 1/10W
R89	1-216-057-00	s	METAL, CHIP 2.2k 5% 1/10W
R90	1-216-097-00	s	METAL, CHIP 100k 5% 1/10W
R91	1-216-097-00	s	METAL, CHIP 100k 5% 1/10W
R94	1-216-089-00	s	METAL, CHIP 47k 5% 1/10W
R95	1-216-017-00	s	METAL, CHIP 47 5% 1/10W
R96	1-216-097-00	s	METAL, CHIP 100k 5% 1/10W
R97	1-216-065-00	s	METAL, CHIP 4.7k 5% 1/10W
R101	1-216-025-00	s	METAL, CHIP 100 5% 1/10W
R103	1-216-073-00	s	METAL, CHIP 10k 5% 1/10W
R105	1-216-081-00	s	METAL, CHIP 22k 5% 1/10W
R106	1-216-081-00	s	METAL, CHIP 22k 5% 1/10W
R115	1-216-021-00	s	METAL, CHIP 68 5% 1/10W
R117	1-216-047-00	s	METAL, CHIP 820 5% 1/10W
R123	1-216-049-00	s	METAL, CHIP 1k 5% 1/10W
R127	1-216-105-00	s	METAL, CHIP 220k 5% 1/10W
R128	1-216-105-00	s	METAL, CHIP 220k 5% 1/10W
R129	1-216-105-00	s	METAL, CHIP 220k 5% 1/10W
R130	1-216-089-00	s	METAL, CHIP 47k 5% 1/10W
R131	1-216-073-00	s	METAL, CHIP 10k 5% 1/10W
R132	1-216-049-00	s	METAL, CHIP 1k 5% 1/10W
R133	1-216-057-00	s	METAL, CHIP 2.2k 5% 1/10W
R134	1-216-077-00	s	METAL, CHIP 15k 5% 1/10W
R135	1-216-089-00	s	METAL, CHIP 47k 5% 1/10W
R136	1-216-073-00	s	METAL, CHIP 10k 5% 1/10W
R137	1-216-049-00	s	METAL, CHIP 1k 5% 1/10W
R138	1-216-057-00	s	METAL, CHIP 2.2k 5% 1/10W
R139	1-216-077-00	s	METAL, CHIP 15k 5% 1/10W
R148	1-216-065-00	s	METAL, CHIP 4.7k 5% 1/10W
R149	1-216-073-00	s	METAL, CHIP 10k 5% 1/10W
R150	1-216-073-00	s	METAL, CHIP 10k 5% 1/10W
R151	1-216-073-00	s	METAL, CHIP 10k 5% 1/10W
R152	1-216-073-00	s	METAL, CHIP 10k 5% 1/10W
R153	1-216-073-00	s	METAL, CHIP 10k 5% 1/10W
R154	1-216-073-00	s	METAL, CHIP 10k 5% 1/10W
R155	1-216-073-00	s	METAL, CHIP 10k 5% 1/10W
R156	1-216-073-00	s	METAL, CHIP 10k 5% 1/10W
R157	1-216-059-00	s	METAL, CHIP 2.7k 5% 1/10W
R158	1-216-059-00	s	METAL, CHIP 2.7k 5% 1/10W
R159	1-216-059-00	s	METAL, CHIP 2.7k 5% 1/10W
R160	1-216-059-00	s	METAL, CHIP 2.7k 5% 1/10W
R164	1-216-059-00	s	METAL, CHIP 2.7k 5% 1/10W
R165	1-216-059-00	s	METAL, CHIP 2.7k 5% 1/10W
R166	1-216-009-00	s	METAL, CHIP 22 5% 1/10W
R167	1-216-049-00	s	METAL, CHIP 1k 5% 1/10W
R168	1-216-089-00	s	METAL, CHIP 47k 5% 1/10W
R170	1-216-089-00	s	METAL, CHIP 47k 5% 1/10W
R171	1-216-073-00	s	METAL, CHIP 10k 5% 1/10W
R172	1-216-073-00	s	METAL, CHIP 10k 5% 1/10W
R173	1-216-061-00	s	METAL, CHIP 3.3k 5% 1/10W
R174	1-216-061-00	s	METAL, CHIP 3.3k 5% 1/10W
R175	1-216-035-00	s	METAL, CHIP 270 5% 1/10W
R176	1-216-061-00	s	METAL, CHIP 3.3k 5% 1/10W
R177	1-216-129-00	s	METAL, CHIP 2.2M 5% 1/10W
R180	1-216-073-00	s	METAL, CHIP 10k 5% 1/10W
R181	1-216-049-00	s	METAL, CHIP 1k 5% 1/10W
R182	1-216-089-00	s	METAL, CHIP 47k 5% 1/10W
R183	1-216-077-00	s	METAL, CHIP 15k 5% 1/10W
R184	1-216-057-00	s	METAL, CHIP 2.2k 5% 1/10W

NOTE : For the parts marked # in the parts list, refer to "Section 23 Changed Parts".

(MD-71 BOARD(DVR-2000/2100))

Ref. No. or Q'ty	Part No.	SP	Description
R185	1-216-049-00	s	METAL, CHIP 1k 5% 1/10W
R186	1-216-089-00	s	METAL, CHIP 47k 5% 1/10W
R187	1-216-057-00	s	METAL, CHIP 2.2k 5% 1/10W
R188	1-216-077-00	s	METAL, CHIP 15k 5% 1/10W
R189	1-216-073-00	s	METAL, CHIP 10k 5% 1/10W
R190	1-216-129-00	s	METAL, CHIP 2.2M 5% 1/10W
R193	1-216-089-00	s	METAL, CHIP 47k 5% 1/10W
R194	1-216-049-00	s	METAL, CHIP 1k 5% 1/10W
R195	1-216-073-00	s	METAL, CHIP 10k 5% 1/10W
R196	1-216-077-00	s	METAL, CHIP 15k 5% 1/10W
R197	1-216-057-00	s	METAL, CHIP 2.2k 5% 1/10W
R198	1-216-049-00	s	METAL, CHIP 1k 5% 1/10W
R199	1-216-089-00	s	METAL, CHIP 47k 5% 1/10W
R200	1-216-077-00	s	METAL, CHIP 15k 5% 1/10W
R201	1-216-057-00	s	METAL, CHIP 2.2k 5% 1/10W
R202	1-216-073-00	s	METAL, CHIP 10k 5% 1/10W
R203	1-216-089-00	s	METAL, CHIP 47k 5% 1/10W
R204	1-216-113-00	s	METAL, CHIP 470k 5% 1/10W
R205	1-216-035-00	s	METAL, CHIP 270 5% 1/10W
R206	1-216-061-00	s	METAL, CHIP 3.3k 5% 1/10W
R207	1-216-061-00	s	METAL, CHIP 3.3k 5% 1/10W
R208	1-216-061-00	s	METAL, CHIP 3.3k 5% 1/10W
R209	1-216-073-00	s	METAL, CHIP 10k 5% 1/10W
R210	1-216-073-00	s	METAL, CHIP 10k 5% 1/10W
R211	1-216-073-00	s	METAL, CHIP 10k 5% 1/10W
R212	1-216-073-00	s	METAL, CHIP 10k 5% 1/10W
R213	1-216-055-00	s	METAL, CHIP 1.8k 5% 1/10W
R214	1-216-055-00	s	METAL, CHIP 1.8k 5% 1/10W
R215	1-216-059-00	s	METAL, CHIP 2.7k 5% 1/10W
R216	1-216-059-00	s	METAL, CHIP 2.7k 5% 1/10W
R217	1-216-017-00	s	METAL, CHIP 47 5% 1/10W
R218	1-216-017-00	s	METAL, CHIP 47 5% 1/10W
R219	1-216-017-00	s	METAL, CHIP 47 5% 1/10W
R220	1-216-073-00	s	METAL, CHIP 10k 5% 1/10W
R221	1-216-085-00	s	METAL, CHIP 33k 5% 1/10W
R222	1-216-043-00	s	METAL, CHIP 560 5% 1/10W
R224	1-216-049-00	s	METAL, CHIP 1k 5% 1/10W
R226	1-216-057-00	s	METAL, CHIP 2.2k 5% 1/10W
R227	1-216-081-00	s	METAL, CHIP 22k 5% 1/10W
R228	1-216-055-00	s	METAL, CHIP 1.8k 5% 1/10W
R229	1-216-039-00	s	METAL, CHIP 390 5% 1/10W
R230	1-216-097-00	s	METAL, CHIP 100k 5% 1/10W
R231	1-216-097-00	s	METAL, CHIP 100k 5% 1/10W
R232	1-216-073-00	s	METAL, CHIP 10k 5% 1/10W
R233	1-216-073-00	s	METAL, CHIP 10k 5% 1/10W
R234	1-216-073-00	s	METAL, CHIP 10k 5% 1/10W
R235	1-216-073-00	s	METAL, CHIP 10k 5% 1/10W
R236	1-216-047-00	s	METAL, CHIP 820 5% 1/10W
R237	1-216-047-00	s	METAL, CHIP 820 5% 1/10W
R238	1-216-047-00	s	METAL, CHIP 820 5% 1/10W
R239	1-216-047-00	s	METAL, CHIP 820 5% 1/10W
R240	1-216-017-00	s	METAL, CHIP 47 5% 1/10W
R241	1-216-017-00	s	METAL, CHIP 47 5% 1/10W
R242	1-216-017-00	s	METAL, CHIP 47 5% 1/10W
R243	1-216-017-00	s	METAL, CHIP 47 5% 1/10W
R244	1-216-017-00	s	METAL, CHIP 47 5% 1/10W
R245	1-216-017-00	s	METAL, CHIP 47 5% 1/10W
R246	1-216-017-00	s	METAL, CHIP 47 5% 1/10W
R247	1-216-017-00	s	METAL, CHIP 47 5% 1/10W

NOTE : Please see page 22-42 for the parts that are not listed in the parts list.

(MD-71 BOARD(DVR-2000/2100))

Ref. No. or Q'ty	Part No.	SP	Description
R248	1-216-049-00	s	METAL, CHIP 1k 5% 1/10W
R249	1-216-049-00	s	METAL, CHIP 1k 5% 1/10W
R250	1-216-049-00	s	METAL, CHIP 1k 5% 1/10W
R251	1-216-049-00	s	METAL, CHIP 1k 5% 1/10W
R252	1-216-049-00	s	METAL, CHIP 1k 5% 1/10W
R253	1-216-049-00	s	METAL, CHIP 1k 5% 1/10W
R254	1-216-049-00	s	METAL, CHIP 1k 5% 1/10W
R255	1-216-049-00	s	METAL, CHIP 1k 5% 1/10W
R256	1-216-049-00	s	METAL, CHIP 1k 5% 1/10W
R257	1-216-049-00	s	METAL, CHIP 1k 5% 1/10W
R258	1-216-049-00	s	METAL, CHIP 1k 5% 1/10W
R259	1-216-049-00	s	METAL, CHIP 1k 5% 1/10W
R260	1-216-089-00	s	METAL, CHIP 47k 5% 1/10W
R261	1-216-089-00	s	METAL, CHIP 47k 5% 1/10W
R262	1-216-049-00	s	METAL, CHIP 1k 5% 1/10W
R263	1-216-049-00	s	METAL, CHIP 1k 5% 1/10W
R268	1-216-073-00	s	METAL, CHIP 10k 5% 1/10W
R273	1-216-097-00	s	METAL, CHIP 100k 5% 1/10W
R275	1-216-009-00	s	METAL, CHIP 22 5% 1/10W
R276	1-216-025-00	s	METAL, CHIP 100 5% 1/10W
R277	1-216-025-00	s	METAL, CHIP 100 5% 1/10W
R278	1-216-025-00	s	METAL, CHIP 100 5% 1/10W
R279	1-216-073-00	s	METAL, CHIP 10k 5% 1/10W
R280	1-216-073-00	s	METAL, CHIP 10k 5% 1/10W
R281	1-216-063-00	s	METAL, CHIP 3.9k 5% 1/10W
R282	1-216-073-00	s	METAL, CHIP 10k 5% 1/10W
R283	1-216-063-00	s	METAL, CHIP 3.9k 5% 1/10W
R284	1-216-073-00	s	METAL, CHIP 10k 5% 1/10W
R285	1-216-063-00	s	METAL, CHIP 3.9k 5% 1/10W
R286	1-216-073-00	s	METAL, CHIP 10k 5% 1/10W
R287	1-216-073-00	s	METAL, CHIP 10k 5% 1/10W
R288	1-216-073-00	s	METAL, CHIP 10k 5% 1/10W
R289	1-216-057-00	s	METAL, CHIP 2.2k 5% 1/10W
R290	1-216-047-00	s	METAL, CHIP 820 5% 1/10W
R291	1-216-047-00	s	METAL, CHIP 820 5% 1/10W
R292	1-216-065-00	s	METAL, CHIP 4.7k 5% 1/10W
#R293	1-216-073-00	s	METAL, CHIP 10k 5% 1/10W
#R294	1-216-073-00	s	METAL, CHIP 10k 5% 1/10W
#R295	1-216-073-00	s	METAL, CHIP 10k 5% 1/10W
#R296	1-216-073-00	s	METAL, CHIP 10k 5% 1/10W
#R297	1-216-073-00	s	METAL, CHIP 10k 5% 1/10W
#R298	1-216-073-00	s	METAL, CHIP 10k 5% 1/10W
#R299	1-216-073-00	s	METAL, CHIP 10k 5% 1/10W
#R300	1-216-073-00	s	METAL, CHIP 10k 5% 1/10W
#R301	1-216-073-00	s	METAL, CHIP 10k 5% 1/10W
#R302	1-216-073-00	s	METAL, CHIP 10k 5% 1/10W
#R303	1-216-073-00	s	METAL, CHIP 10k 5% 1/10W
#R304	1-216-073-00	s	METAL, CHIP 10k 5% 1/10W
#R305	1-216-073-00	s	METAL, CHIP 10k 5% 1/10W
#R306	1-216-073-00	s	METAL, CHIP 10k 5% 1/10W
#R307	1-216-073-00	s	METAL, CHIP 10k 5% 1/10W
#R308	1-216-073-00	s	METAL, CHIP 10k 5% 1/10W
RB1	1-235-005-00	s	RESISTOR BLOCK 47kx8
RB2	1-235-005-00	s	RESISTOR BLOCK 47kx8
RB3	1-235-005-00	s	RESISTOR BLOCK 47kx8
RB4	1-231-515-11	s	RESISTOR BLOCK 1.8kx4
RB5	1-235-005-00	s	RESISTOR BLOCK 47kx8
RB6	1-235-005-00	s	RESISTOR BLOCK 47kx8

NOTE : For the parts marked # in the parts list, refer to "Section 23 Changed Parts".

(MD-71 BOARD(DVR-2000/2100))

Ref. No. or Q'ty	Part No.	SP	Description
RB7	1-235-005-00	s	RESISTOR BLOCK 47kx8
RB8	1-231-549-11	s	RESISTOR BLOCK 47kx4
RB9	1-231-410-00	s	RESISTOR BLOCK 10kx8
RB10	1-231-533-00	s	RESISTOR BLOCK 10kx4

NOTE : Please see page 22-42 for the parts that are not listed in the parts list.

MOA-05 BOARD/BOARD NO. 1-639-121-11/-12(DVR-2000/2100)

BOARD NO. 1-639-121-11/-12
DVR-2000(J) : S/N 10001 thru 10199
DVR-2000(UC): S/N 10001 thru 10299
DVR-2000(EK): S/N 10001 thru 10599
DVR-2100(J) : S/N 10001 thru 10999
DVR-2100(UC): S/N 10001 thru 11099
DVR-2100(EK): S/N 10001 thru 11099

Ref. No. or Q'ty	Part No.	SP	Description
#1pc	A-6019-046-B	o	MOUNTED CIRCUIT BOARD, MOA-05
1pc	1-526-656-00	s	SOCKET, IC (DP) 20P
3pcs	1-526-816-21	o	SOCKET, IC (DP) 24P
#3pcs	1-540-187-21	o	SOCKET, IC (DP) 28P
1pc	3-171-895-51	o	LABEL (P), SERIAL NUMBER
2pcs	3-714-634-01	o	LEVER, PC BOARD
2pcs	7-626-320-11	s	PIN, SPRING 3X8
9pcs	7-682-948-01	s	SCREW, +PSW 3x8
4pcs	7-685-547-14	s	SCREW, +BVTP 3x10 TYPE2 N-S
C1	1-164-004-11	s	CERAMIC, CHIP 0.1uF 10% 25V
C2	1-164-004-11	s	CERAMIC, CHIP 0.1uF 10% 25V
C5	1-162-710-11	s	CERAMIC 100pF 1% 50V
C6	1-162-710-11	s	CERAMIC 100pF 1% 50V
C12	1-162-875-11	s	CERAMIC 68pF 5% 50V
C13	1-162-718-11	s	CERAMIC 220pF 1% 50V
C17	1-124-006-11	s	ELECT, NONPOLAR 10uF 20% 25V
C18	1-124-006-11	s	ELECT, NONPOLAR 10uF 20% 25V
C19	1-124-234-00	s	ELECT 22uF 20% 16V
C20	1-124-234-00	s	ELECT 22uF 20% 16V
C21	1-162-671-11	s	CERAMIC 22pF 5% 50V
C22	1-124-234-00	s	ELECT 22uF 20% 16V
C23	1-135-092-21	s	TANTALUM, CHIP 3.3uF 10% 16V
C24	1-124-589-11	s	ELECT 47uF 20% 16V
C25	1-135-092-21	s	TANTALUM, CHIP 3.3uF 10% 16V
C26	1-135-092-21	s	TANTALUM, CHIP 3.3uF 10% 16V
C27	1-130-467-00	s	MYLAR 470pF 5% 50V
C28	1-135-213-21	s	TANTALUM 3.3uF 10% 25V
C30	1-162-718-11	s	CERAMIC 220pF 1% 50V
C34	1-126-336-11	s	ELECT 220uF 20% 25V
C35	1-164-004-11	s	CERAMIC, CHIP 0.1uF 10% 25V
C36	1-126-336-11	s	ELECT 220uF 20% 25V
C37	1-164-004-11	s	CERAMIC, CHIP 0.1uF 10% 25V
C38	1-164-004-11	s	CERAMIC, CHIP 0.1uF 10% 25V
C39	1-126-541-11	s	ELECT 330uF 20% 25V
C40	1-164-004-11	s	CERAMIC, CHIP 0.1uF 10% 25V
C41	1-126-541-11	s	ELECT 330uF 20% 25V
C42	1-164-004-11	s	CERAMIC, CHIP 0.1uF 10% 25V
C43	1-126-541-11	s	ELECT 330uF 20% 25V
C44	1-164-004-11	s	CERAMIC, CHIP 0.1uF 10% 25V
C45	1-126-541-11	s	ELECT 330uF 20% 25V
C46	1-164-004-11	s	CERAMIC, CHIP 0.1uF 10% 25V
C48	1-124-598-11	s	ELECT 22uF 20% 25V
C49	1-124-598-11	s	ELECT 22uF 20% 25V
C50	1-124-598-11	s	ELECT 22uF 20% 25V
C51	1-124-598-11	s	ELECT 22uF 20% 25V
C52	1-162-671-11	s	CERAMIC 22pF 5% 50V
C53	1-126-233-11	s	ELECT 22uF 20% 50V
C54	1-126-233-11	s	ELECT 22uF 20% 50V
C55	1-162-671-11	s	CERAMIC 22pF 5% 50V
C59	1-124-767-00	s	ELECT, NONPOLAR 2.2uF 20% 50V
C60	1-124-767-00	s	ELECT, NONPOLAR 2.2uF 20% 50V
C61	1-162-710-11	s	CERAMIC 100pF 1% 50V

NOTE : For the parts marked # in the parts list, refer to "Section 23 Changed Parts".

(MOA-05 BOARD/BOARD NO. 1-639-121-11/-12(DVR-2000/2100))

Ref. No. or Q'ty	Part No.	SP	Description
C62	1-162-710-11	s	CERAMIC 100pF 1% 50V
C76	1-126-096-11	s	ELECT 10uF 20% 35V
C77	1-126-096-11	s	ELECT 10uF 20% 35V
C78	1-124-598-11	s	ELECT 22uF 20% 25V
C79	1-164-004-11	s	CERAMIC, CHIP 0.1uF 10% 25V
C80	1-126-096-11	s	ELECT 10uF 20% 35V
C81	1-126-336-11	s	ELECT 220uF 20% 25V
C82	1-126-336-11	s	ELECT 220uF 20% 25V
C83	1-126-336-11	s	ELECT 220uF 20% 25V
C84	1-126-336-11	s	ELECT 220uF 20% 25V
C85	1-135-092-21	s	TANTALUM, CHIP 3.3uF 10% 16V
C86	1-135-092-21	s	TANTALUM, CHIP 3.3uF 10% 16V
C87	1-135-092-21	s	TANTALUM, CHIP 3.3uF 10% 16V
C88	1-135-092-21	s	TANTALUM, CHIP 3.3uF 10% 16V
C89	1-130-467-00	s	MYLAR 470pF 5% 50V
C90	1-135-213-21	s	TANTALUM 3.3uF 10% 25V
C92	1-162-718-11	s	CERAMIC 220pF 1% 50V
C97	1-135-092-21	s	TANTALUM, CHIP 3.3uF 10% 16V
C98	1-135-092-21	s	TANTALUM, CHIP 3.3uF 10% 16V
C99	1-135-092-21	s	TANTALUM, CHIP 3.3uF 10% 16V
C100	1-135-092-21	s	TANTALUM, CHIP 3.3uF 10% 16V
C101	1-130-467-00	s	MYLAR 470pF 5% 50V
C102	1-135-213-21	s	TANTALUM 3.3uF 10% 25V
C104	1-162-718-11	s	CERAMIC 220pF 1% 50V
C107	1-135-092-21	s	TANTALUM, CHIP 3.3uF 10% 16V
C108	1-135-092-21	s	TANTALUM, CHIP 3.3uF 10% 16V
C109	1-135-092-21	s	TANTALUM, CHIP 3.3uF 10% 16V
C110	1-135-092-21	s	TANTALUM, CHIP 3.3uF 10% 16V
C111	1-130-467-00	s	MYLAR 470pF 5% 50V
C112	1-135-213-21	s	TANTALUM 3.3uF 10% 25V
C114	1-162-718-11	s	CERAMIC 220pF 1% 50V
C115	1-130-475-00	s	MYLAR 0.0022uF 5% 50V
C118	1-135-092-21	s	TANTALUM, CHIP 3.3uF 10% 16V
C119	1-135-092-21	s	TANTALUM, CHIP 3.3uF 10% 16V
C120	1-135-092-21	s	TANTALUM, CHIP 3.3uF 10% 16V
C121	1-135-092-21	s	TANTALUM, CHIP 3.3uF 10% 16V
C122	1-130-467-00	s	MYLAR 470pF 5% 50V
C123	1-135-213-21	s	TANTALUM 3.3uF 10% 25V
C125	1-162-718-11	s	CERAMIC 220pF 1% 50V
C129	1-124-598-11	s	ELECT 22uF 20% 25V
C130	1-124-598-11	s	ELECT 22uF 20% 25V
C131	1-126-233-11	s	ELECT 22uF 20% 50V
C132	1-126-233-11	s	ELECT 22uF 20% 50V
C133	1-162-708-11	s	CERAMIC 82pF 1% 50V
C134	1-162-708-11	s	CERAMIC 82pF 1% 50V
C137	1-126-233-11	s	ELECT 22uF 20% 50V
C138	1-126-233-11	s	ELECT 22uF 20% 50V
C139	1-162-708-11	s	CERAMIC 82pF 1% 50V
C140	1-162-708-11	s	CERAMIC 82pF 1% 50V
C141	1-124-598-11	s	ELECT 22uF 20% 25V
C142	1-124-598-11	s	ELECT 22uF 20% 25V
C145	1-126-096-11	s	ELECT 10uF 20% 35V
C146	1-130-483-00	s	MYLAR 0.01uF 5% 50V
C147	1-126-336-11	s	ELECT 220uF 20% 25V
C148	1-126-336-11	s	ELECT 220uF 20% 25V
C149	1-126-336-11	s	ELECT 220uF 20% 25V
C150	1-126-336-11	s	ELECT 220uF 20% 25V
C151	1-126-336-11	s	ELECT 220uF 20% 25V
C152	1-126-336-11	s	ELECT 220uF 20% 25V

NOTE : Please see page 22-42 for the parts that are not listed in the parts list.

(MOA-05 BOARD/BOARD NO. 1-639-121-11/-12(DVR-2000/2100))

Ref. No. or Q'ty	Part No.	SP	Description
C153	1-126-336-11	s	ELECT 220uF 20% 25V
C154	1-126-336-11	s	ELECT 220uF 20% 25V
C157	1-126-541-11	s	ELECT 330uF 20% 25V
C158	1-162-710-11	s	CERAMIC 100pF 1% 50V
C159	1-162-710-11	s	CERAMIC 100pF 1% 50V
C160	1-162-710-11	s	CERAMIC 100pF 1% 50V
C164	1-162-710-11	s	CERAMIC 100pF 1% 50V
C201	1-124-598-11	s	ELECT 22uF 20% 25V
C202	1-124-598-11	s	ELECT 22uF 20% 25V
C207	1-164-004-11	s	CERAMIC, CHIP 0.1uF 10% 25V
C208	1-164-004-11	s	CERAMIC, CHIP 0.1uF 10% 25V
C209	1-164-004-11	s	CERAMIC, CHIP 0.1uF 10% 25V
C210	1-164-004-11	s	CERAMIC, CHIP 0.1uF 10% 25V
C211	1-164-004-11	s	CERAMIC, CHIP 0.1uF 10% 25V
C212	1-164-004-11	s	CERAMIC, CHIP 0.1uF 10% 25V
C213	1-124-598-11	s	ELECT 22uF 20% 25V
C214	1-124-598-11	s	ELECT 22uF 20% 25V
C215	1-164-004-11	s	CERAMIC, CHIP 0.1uF 10% 25V
C216	1-164-004-11	s	CERAMIC, CHIP 0.1uF 10% 25V
C217	1-164-004-11	s	CERAMIC, CHIP 0.1uF 10% 25V
C218	1-164-004-11	s	CERAMIC, CHIP 0.1uF 10% 25V
C219	1-164-004-11	s	CERAMIC, CHIP 0.1uF 10% 25V
C220	1-164-004-11	s	CERAMIC, CHIP 0.1uF 10% 25V
C221	1-164-004-11	s	CERAMIC, CHIP 0.1uF 10% 25V
C224	1-124-598-11	s	ELECT 22uF 20% 25V
C225	1-124-598-11	s	ELECT 22uF 20% 25V
C226	1-124-598-11	s	ELECT 22uF 20% 25V
C227	1-124-598-11	s	ELECT 22uF 20% 25V
C230	1-124-598-11	s	ELECT 22uF 20% 25V
C231	1-124-598-11	s	ELECT 22uF 20% 25V
C232	1-164-004-11	s	CERAMIC, CHIP 0.1uF 10% 25V
C233	1-164-004-11	s	CERAMIC, CHIP 0.1uF 10% 25V
C234	1-164-004-11	s	CERAMIC, CHIP 0.1uF 10% 25V
C235	1-164-004-11	s	CERAMIC, CHIP 0.1uF 10% 25V
C236	1-164-004-11	s	CERAMIC, CHIP 0.1uF 10% 25V
C237	1-124-589-11	s	ELECT 47uF 20% 16V
C238	1-124-589-11	s	ELECT 47uF 20% 16V
C239	1-164-004-11	s	CERAMIC, CHIP 0.1uF 10% 25V
C240	1-164-004-11	s	CERAMIC, CHIP 0.1uF 10% 25V
C241	1-124-598-11	s	ELECT 22uF 20% 25V
C242	1-124-598-11	s	ELECT 22uF 20% 25V
C243	1-124-598-11	s	ELECT 22uF 20% 25V
C244	1-124-598-11	s	ELECT 22uF 20% 25V
C245	1-164-004-11	s	CERAMIC, CHIP 0.1uF 10% 25V
C246	1-124-589-11	s	ELECT 47uF 20% 16V
C247	1-124-589-11	s	ELECT 47uF 20% 16V
C248	1-164-004-11	s	CERAMIC, CHIP 0.1uF 10% 25V
C249	1-164-004-11	s	CERAMIC, CHIP 0.1uF 10% 25V
C250	1-124-598-11	s	ELECT 22uF 20% 25V
C251	1-124-598-11	s	ELECT 22uF 20% 25V
C252	1-124-598-11	s	ELECT 22uF 20% 25V
C253	1-124-598-11	s	ELECT 22uF 20% 25V
C256	1-124-234-00	s	ELECT 22uF 20% 16V
C257	1-124-234-00	s	ELECT 22uF 20% 16V
C275	1-164-004-11	s	CERAMIC, CHIP 0.1uF 10% 25V
C278	1-164-004-11	s	CERAMIC, CHIP 0.1uF 10% 25V
C279	1-164-004-11	s	CERAMIC, CHIP 0.1uF 10% 25V
C280	1-164-004-11	s	CERAMIC, CHIP 0.1uF 10% 25V
C281	1-130-483-00	s	MYLAR 0.01uF 5% 50V

NOTE : For the parts marked # in the parts list, refer to "Section 23 Changed Parts".

(MOA-05 BOARD/BOARD NO. 1-639-121-11/-12(DVR-2000/2100))

Ref. No. or Q'ty	Part No.	SP	Description
C282	1-130-475-00	s	MYLAR 0.0022uF 5% 50V
C283	1-164-004-11	s	CERAMIC, CHIP 0.1uF 10% 25V
C284	1-164-004-11	s	CERAMIC, CHIP 0.1uF 10% 25V
C285	1-130-483-00	s	MYLAR 0.01uF 5% 50V
C286	1-130-475-00	s	MYLAR 0.0022uF 5% 50V
C287	1-130-483-00	s	MYLAR 0.01uF 5% 50V
C288	1-130-475-00	s	MYLAR 0.0022uF 5% 50V
C289	1-164-004-11	s	CERAMIC, CHIP 0.1uF 10% 25V
C290	1-130-483-00	s	MYLAR 0.01uF 5% 50V
C291	1-130-475-00	s	MYLAR 0.0022uF 5% 50V
C292	1-164-004-11	s	CERAMIC, CHIP 0.1uF 10% 25V
C293	1-164-004-11	s	CERAMIC, CHIP 0.1uF 10% 25V
C294	1-164-004-11	s	CERAMIC, CHIP 0.1uF 10% 25V
#C301	1-164-004-11	s	CERAMIC, CHIP 0.1uF 10% 25V
C303	1-164-004-11	s	CERAMIC, CHIP 0.1uF 10% 25V
C304	1-164-004-11	s	CERAMIC, CHIP 0.1uF 10% 25V
C305	1-164-004-11	s	CERAMIC, CHIP 0.1uF 10% 25V
C306	1-164-004-11	s	CERAMIC, CHIP 0.1uF 10% 25V
C307	1-164-004-11	s	CERAMIC, CHIP 0.1uF 10% 25V
C308	1-164-004-11	s	CERAMIC, CHIP 0.1uF 10% 25V
C309	1-164-004-11	s	CERAMIC, CHIP 0.1uF 10% 25V
C310	1-164-004-11	s	CERAMIC, CHIP 0.1uF 10% 25V
C311	1-164-004-11	s	CERAMIC, CHIP 0.1uF 10% 25V
C312	1-164-004-11	s	CERAMIC, CHIP 0.1uF 10% 25V
C313	1-164-004-11	s	CERAMIC, CHIP 0.1uF 10% 25V
C314	1-164-004-11	s	CERAMIC, CHIP 0.1uF 10% 25V
C319	1-164-004-11	s	CERAMIC, CHIP 0.1uF 10% 25V
C320	1-164-004-11	s	CERAMIC, CHIP 0.1uF 10% 25V
C325	1-164-004-11	s	CERAMIC, CHIP 0.1uF 10% 25V
C341	1-164-004-11	s	CERAMIC, CHIP 0.1uF 10% 25V
C342	1-164-004-11	s	CERAMIC, CHIP 0.1uF 10% 25V
C343	1-164-004-11	s	CERAMIC, CHIP 0.1uF 10% 25V
C344	1-164-004-11	s	CERAMIC, CHIP 0.1uF 10% 25V
C345	1-164-004-11	s	CERAMIC, CHIP 0.1uF 10% 25V
C348	1-164-004-11	s	CERAMIC, CHIP 0.1uF 10% 25V
C349	1-164-004-11	s	CERAMIC, CHIP 0.1uF 10% 25V
C350	1-164-004-11	s	CERAMIC, CHIP 0.1uF 10% 25V
C351	1-164-004-11	s	CERAMIC, CHIP 0.1uF 10% 25V
C352	1-164-004-11	s	CERAMIC, CHIP 0.1uF 10% 25V
C356	1-164-004-11	s	CERAMIC, CHIP 0.1uF 10% 25V
C357	1-164-004-11	s	CERAMIC, CHIP 0.1uF 10% 25V
C359	1-164-004-11	s	CERAMIC, CHIP 0.1uF 10% 25V
C360	1-164-004-11	s	CERAMIC, CHIP 0.1uF 10% 25V
C361	1-164-004-11	s	CERAMIC, CHIP 0.1uF 10% 25V
C363	1-164-004-11	s	CERAMIC, CHIP 0.1uF 10% 25V
C364	1-164-004-11	s	CERAMIC, CHIP 0.1uF 10% 25V
C365	1-164-004-11	s	CERAMIC, CHIP 0.1uF 10% 25V
C367	1-164-004-11	s	CERAMIC, CHIP 0.1uF 10% 25V
C369	1-164-004-11	s	CERAMIC, CHIP 0.1uF 10% 25V
C370	1-164-004-11	s	CERAMIC, CHIP 0.1uF 10% 25V
C372	1-164-004-11	s	CERAMIC, CHIP 0.1uF 10% 25V
C373	1-164-004-11	s	CERAMIC, CHIP 0.1uF 10% 25V
C376	1-164-004-11	s	CERAMIC, CHIP 0.1uF 10% 25V
C377	1-164-004-11	s	CERAMIC, CHIP 0.1uF 10% 25V
C378	1-164-004-11	s	CERAMIC, CHIP 0.1uF 10% 25V
C379	1-164-004-11	s	CERAMIC, CHIP 0.1uF 10% 25V
C380	1-164-004-11	s	CERAMIC, CHIP 0.1uF 10% 25V
C381	1-164-004-11	s	CERAMIC, CHIP 0.1uF 10% 25V
C382	1-164-004-11	s	CERAMIC, CHIP 0.1uF 10% 25V

NOTE : Please see page 22-42 for the parts that are not listed in the parts list.

(MOA-05 BOARD/BOARD NO. 1-639-121-11/-12(DVR-2000/2100))

Ref. No. or Q'ty	Part No.	SP	Description
C383	1-164-004-11	s	CERAMIC, CHIP 0.1uF 10% 25V
C385	1-164-004-11	s	CERAMIC, CHIP 0.1uF 10% 25V
C386	1-164-004-11	s	CERAMIC, CHIP 0.1uF 10% 25V
C387	1-164-004-11	s	CERAMIC, CHIP 0.1uF 10% 25V
C388	1-164-004-11	s	CERAMIC, CHIP 0.1uF 10% 25V
C389	1-164-004-11	s	CERAMIC, CHIP 0.1uF 10% 25V
C390	1-164-004-11	s	CERAMIC, CHIP 0.1uF 10% 25V
C391	1-164-004-11	s	CERAMIC, CHIP 0.1uF 10% 25V
C394	1-164-004-11	s	CERAMIC, CHIP 0.1uF 10% 25V
C395	1-164-004-11	s	CERAMIC, CHIP 0.1uF 10% 25V
C396	1-164-004-11	s	CERAMIC, CHIP 0.1uF 10% 25V
C397	1-164-004-11	s	CERAMIC, CHIP 0.1uF 10% 25V
C398	1-164-004-11	s	CERAMIC, CHIP 0.1uF 10% 25V
C399	1-164-004-11	s	CERAMIC, CHIP 0.1uF 10% 25V
C400	1-164-004-11	s	CERAMIC, CHIP 0.1uF 10% 25V
C401	1-164-004-11	s	CERAMIC, CHIP 0.1uF 10% 25V
C402	1-164-004-11	s	CERAMIC, CHIP 0.1uF 10% 25V
C403	1-164-004-11	s	CERAMIC, CHIP 0.1uF 10% 25V
C404	1-164-004-11	s	CERAMIC, CHIP 0.1uF 10% 25V
C405	1-164-004-11	s	CERAMIC, CHIP 0.1uF 10% 25V
C407	1-124-242-00	s	ELECT 33uF 20% 25V
C408	1-124-589-11	s	ELECT 47uF 20% 16V
#C410	1-124-598-11	s	ELECT 22uF 20% 25V
#C411	1-124-598-11	s	ELECT 22uF 20% 25V
#C412	1-126-541-11	s	ELECT 330uF 20% 25V
#C413	1-126-541-11	s	ELECT 330uF 20% 25V
#C414	1-126-541-11	s	ELECT 330uF 20% 25V
#C415	1-126-541-11	s	ELECT 330uF 20% 25V
#C416	1-126-541-11	s	ELECT 330uF 20% 25V
#C417	1-126-336-11	s	ELECT 220uF 20% 25V
#C418	1-126-336-11	s	ELECT 220uF 20% 25V
CN511	1-565-207-21	s	CONNECTOR, DIN 128P, MALE
CN512	1-565-207-21	s	CONNECTOR, DIN 128P, MALE
D1	8-719-911-19	s	DIODE 1SS119
D2	8-719-016-42	s	DIODE MC932TP
D3	8-719-016-42	s	DIODE MC932TP
D4	8-719-016-42	s	DIODE MC932TP
D5	8-719-016-42	s	DIODE MC932TP
D6	8-719-016-42	s	DIODE MC932TP
D7	8-719-911-19	s	DIODE 1SS119
D8	8-719-911-19	s	DIODE 1SS119
D9	8-719-911-19	s	DIODE 1SS119
D10	8-719-911-19	s	DIODE 1SS119
FL1	1-236-127-11	s	FILTER, LOW-PASS
FL3	1-236-127-11	s	FILTER, LOW-PASS
FL4	1-236-127-11	s	FILTER, LOW-PASS
FL5	1-236-127-11	s	FILTER, LOW-PASS
FL6	1-236-127-11	s	FILTER, LOW-PASS
FL7	1-236-127-11	s	FILTER, LOW-PASS
#FL8	1-236-127-11	s	FILTER, LOW-PASS
ICB7	8-759-916-14	s	IC SN74HC04N
ICB8	8-759-916-12	s	IC SN74HC00N
ICB10	8-759-602-83	s	IC M5238P
ICB11	8-759-982-25	s	IC RC78L09A
ICB12	8-759-982-47	s	IC RC79L09A
ICB14	8-759-915-76	s	IC TL7700CP
ICB15	8-759-903-74	s	IC SN74LS374N

NOTE : For the parts marked # in the parts list, refer to "Section 23 Changed Parts".

(MOA-05 BOARD/BOARD NO. 1-639-121-11/-12(DVR-2000/2100))

Ref. No. or Q'ty	Part No.	SP	Description
ICB16	8-759-926-32	s	IC AM26LS32PC
ICB17	8-759-916-21	s	IC SN74HC20N
ICB18	8-759-945-30	s	IC SN75ALS194N
ICB19	8-759-926-32	s	IC AM26LS32PC
ICB2A	8-759-602-01	s	IC M5220P
ICB2B	8-759-602-01	s	IC M5220P
ICB20	8-759-917-06	s	IC SN74HC574N
ICB21	8-759-917-06	s	IC SN74HC574N
ICB22	8-759-917-06	s	IC SN74HC574N
ICB3A	8-759-602-01	s	IC M5220P
ICB3B	8-759-602-01	s	IC M5220P
ICB4A	8-759-602-01	s	IC M5220P
ICB4B	8-759-602-01	s	IC M5220P
ICC2	8-759-602-01	s	IC M5220P
ICC4	8-759-602-83	s	IC M5238P
ICC6	8-759-145-58	s	IC UPC4558C
ICC7	8-759-145-58	s	IC UPC4558C
ICC8	8-759-145-58	s	IC UPC4558C
ICC9	8-759-145-58	s	IC UPC4558C
ICC14	8-759-916-16	s	IC MC74HC08AN
ICC16	8-759-902-40	s	IC SN74LS240N
ICC17	8-759-900-08	s	IC SN74LS08N
ICC18	8-759-902-40	s	IC SN74LS240N
ICC19	8-759-916-14	s	IC SN74HC04N
ICC20	8-759-916-16	s	IC MC74HC08AN
ICC21	8-759-147-02	s	IC UPD42101C-3
ICC22	8-759-046-04	s	IC 16V8-MOA0506-1, PLD
ICD2	8-759-602-83	s	IC M5238P
ICD6	8-759-145-58	s	IC UPC4558C
ICD7	8-759-000-47	s	IC MC14051BCP
ICD8	8-759-140-53	s	IC UPD4053BC
ICD9	8-759-000-48	s	IC MC14052BCP
ICE3	8-759-602-83	s	IC M5238P
ICE7	8-759-145-58	s	IC UPC4558C
ICE9	8-759-602-83	s	IC M5238P
ICE13	8-759-916-53	s	IC SN74HC166N
ICE14	8-759-921-22	s	IC SN74HC164N
ICE16	8-759-518-08	s	IC CXD8201Q
ICE20	8-759-065-24	s	IC 5032DC-MOA0504-2, PLD
ICE21	8-759-046-03	s	IC 5032DC-MOA0505-1, PLD
ICE22	8-759-046-03	s	IC 5032DC-MOA0505-1, PLD
ICF8	8-759-602-83	s	IC M5238P
ICF13	8-759-916-53	s	IC SN74HC166N
ICF14	8-759-921-22	s	IC SN74HC164N
ICF16	8-759-916-14	s	IC SN74HC04N
ICF17	8-759-147-02	s	IC UPD42101C-3
ICF18	8-759-147-02	s	IC UPD42101C-3
ICF19	8-759-147-02	s	IC UPD42101C-3
ICF20	8-759-917-06	s	IC SN74HC574N
ICF21	8-759-917-06	s	IC SN74HC574N
ICF22	8-759-917-06	s	IC SN74HC574N
ICG2	8-759-982-03	s	IC RC5532DD
ICG7	8-759-140-53	s	IC UPD4053BC
ICG9	8-759-602-83	s	IC M5238P
ICG13	8-759-982-44	s	IC RC79L05A
ICG14	8-759-996-76	s	IC AK5327-VP
ICH7	8-759-916-14	s	IC SN74HC04N
ICH8	8-759-000-48	s	IC MC14052BCP

NOTE : Please see page 22-42 for the parts that are not listed in the parts list.

(MOA-05 BOARD/BOARD NO. 1-639-121-11/-12(DVR-2000/2100))

Ref. No. or Q'ty	Part No.	SP	Description
ICH13	8-759-982-21	s	IC RC78L05A
ICH16	8-752-304-30	s	IC CX23043
ICH17	8-759-917-05	s	IC SN74HC541N
ICH19	8-759-518-14	s	IC CXD8248Q
ICH21	8-759-517-87	s	IC CXD8093Q
ICJ2	8-759-602-01	s	IC M5220P
ICJ3	8-759-602-01	s	IC M5220P
ICJ4	8-759-602-01	s	IC M5220P
ICJ5	8-759-602-01	s	IC M5220P
ICJ14	8-759-979-08	s	IC PCM58P-J
ICK2	8-759-602-01	s	IC M5220P
ICK3	8-759-602-01	s	IC M5220P
ICK4	8-759-602-01	s	IC M5220P
ICK5	8-759-602-01	s	IC M5220P
ICK8	8-759-103-93	s	IC UPC393C
ICK9	8-759-916-29	s	IC SN74HC74N
ICK16	8-759-045-97	s	IC 7C225-MOA0501-1, PROM
ICK18	8-759-045-99	s	IC 7C225-MOA0502-1, PROM
ICK19	8-759-056-63	s	IC 7C225-MOA0503-2, PROM
ICK21	8-759-921-22	s	IC SN74HC164N
ICK22	8-759-916-53	s	IC SN74HC166N
ICL2	8-759-602-01	s	IC M5220P
ICL3	8-759-602-01	s	IC M5220P
ICL4	8-759-602-01	s	IC M5220P
ICL5	8-759-602-01	s	IC M5220P
ICL8	8-759-103-93	s	IC UPC393C
ICM2	8-759-602-01	s	IC M5220P
ICM5	8-759-602-01	s	IC M5220P
ICM8	8-759-982-03	s	IC RC5532DD
ICM10	8-759-602-83	s	IC M5238P
ICM14	8-759-979-08	s	IC PCM58P-J
ICM17	8-759-999-32	s	IC SM5813APT
ICM18	8-759-921-22	s	IC SN74HC164N
ICM19	8-759-921-22	s	IC SN74HC164N
ICM20	8-759-921-22	s	IC SN74HC164N
ICM21	8-759-921-22	s	IC SN74HC164N
ICM22	8-759-921-22	s	IC SN74HC164N
ICN2	8-759-602-83	s	IC M5238P
ICN5	8-759-602-83	s	IC M5238P
ICN14	8-759-979-08	s	IC PCM58P-J
ICN18	8-759-916-53	s	IC SN74HC166N
ICN19	8-759-916-53	s	IC SN74HC166N
ICN20	8-759-916-53	s	IC SN74HC166N
ICN21	8-759-916-53	s	IC SN74HC166N
ICN22	8-759-916-53	s	IC SN74HC166N
ICN8A	8-759-979-08	s	IC PCM58P-J
ICN8B	8-759-999-32	s	IC SM5813APT
ICP3	8-759-982-03	s	IC RC5532DD
ICP5	8-759-982-03	s	IC RC5532DD
ICP17	8-759-999-32	s	IC SM5813APT
ICQ8	8-759-982-03	s	IC RC5532DD
ICQ10	8-759-982-03	s	IC RC5532DD
ICQ14	8-759-979-08	s	IC PCM58P-J
ICR8	8-759-982-03	s	IC RC5532DD
ICR10	8-759-982-03	s	IC RC5532DD
#L1	1-460-085-11	s	COIL, CHOKE 6.8UH

NOTE : For the parts marked # in the parts list, refer to "Section 23 Changed Parts".

(MOA-05 BOARD/BOARD NO. 1-639-121-11/-12(DVR-2000/2100))

Ref. No. or Q'ty	Part No.	SP	Description
#L2	1-460-085-11	s	COIL, CHOKE 6.8UH
#L3	1-460-085-11	s	COIL, CHOKE 6.8UH
#L4	1-460-085-11	s	COIL, CHOKE 6.8UH
#L5	1-460-085-11	s	COIL, CHOKE 6.8UH
#L6	1-460-085-11	s	COIL, CHOKE 6.8UH
#L7	1-460-085-11	s	COIL, CHOKE 6.8UH
Q1	8-729-900-74	s	TRANSISTOR DTC143TS
Q2	8-729-900-74	s	TRANSISTOR DTC143TS
Q3	8-729-119-78	s	TRANSISTOR 2SC2785-HFE
Q4	8-729-900-74	s	TRANSISTOR DTC143TS
Q5	8-729-900-74	s	TRANSISTOR DTC143TS
Q6	8-729-900-74	s	TRANSISTOR DTC143TS
Q7	8-729-900-74	s	TRANSISTOR DTC143TS
Q8	8-729-900-74	s	TRANSISTOR DTC143TS
Q10	8-729-993-72	s	TRANSISTOR 2SA937-Q
Q11	8-729-800-44	s	TRANSISTOR 2SK152-4
Q12	8-729-993-72	s	TRANSISTOR 2SA937-Q
Q13	8-729-800-44	s	TRANSISTOR 2SK152-4
Q14	8-729-993-72	s	TRANSISTOR 2SA937-Q
Q15	8-729-800-44	s	TRANSISTOR 2SK152-4
Q17	8-729-993-72	s	TRANSISTOR 2SA937-Q
Q18	8-729-800-44	s	TRANSISTOR 2SK152-4
Q19	8-729-900-74	s	TRANSISTOR DTC143TS
R1	1-215-416-00	s	METAL 620 1% 1/6W
R2	1-215-401-11	s	METAL 150 1% 1/6W
R3	1-215-461-00	s	METAL 47k 1% 1/6W
R4	1-215-421-00	s	METAL 1k 1% 1/6W
R5	1-215-452-00	s	METAL 20k 1% 1/6W
R6	1-215-445-00	s	METAL 10k 1% 1/6W
R7	1-215-445-00	s	METAL 10k 1% 1/6W
R8	1-215-445-00	s	METAL 10k 1% 1/6W
R9	1-215-445-00	s	METAL 10k 1% 1/6W
R10	1-215-452-00	s	METAL 20k 1% 1/6W
R11	1-215-422-00	s	METAL 1.1k 1% 1/6W
R12	1-215-453-00	s	METAL 22k 1% 1/6W
R13	1-215-412-00	s	METAL 430 1% 1/6W
R14	1-215-445-00	s	METAL 10k 1% 1/6W
R15	1-215-453-00	s	METAL 22k 1% 1/6W
R18	1-215-429-00	s	METAL 2.2k 1% 1/6W
R29	1-215-453-00	s	METAL 22k 1% 1/6W
R30	1-215-433-00	s	METAL 3.3k 1% 1/6W
R31	1-215-433-00	s	METAL 3.3k 1% 1/6W
R32	1-215-445-00	s	METAL 10k 1% 1/6W
R33	1-215-445-00	s	METAL 10k 1% 1/6W
R34	1-215-413-00	s	METAL 470 1% 1/6W
R35	1-215-445-00	s	METAL 10k 1% 1/6W
R36	1-215-445-00	s	METAL 10k 1% 1/6W
R37	1-215-493-00	s	METAL 1M 1% 1/6W
R38	1-215-445-00	s	METAL 10k 1% 1/6W
R40	1-215-445-00	s	METAL 10k 1% 1/6W
R41	1-215-453-00	s	METAL 22k 1% 1/6W
R42	1-215-409-00	s	METAL 330 1% 1/6W
R43	1-215-445-00	s	METAL 10k 1% 1/6W
R44	1-215-453-00	s	METAL 22k 1% 1/6W
R45	1-215-452-00	s	METAL 20k 1% 1/6W
R46	1-215-445-00	s	METAL 10k 1% 1/6W
#R47	1-215-381-00	s	METAL 22 1% 1/6W
#R48	1-215-381-00	s	METAL 22 1% 1/6W

NOTE : Please see page 22-42 for the parts that are not listed in the parts list.

(MOA-05 BOARD/BOARD NO. 1-639-121-11/-12(DVR-2000/2100))

Ref. No. or Q'ty	Part No.	SP	Description
R49	1-215-397-00	s	METAL 100 1% 1/6W
R50	1-215-397-00	s	METAL 100 1% 1/6W
R51	1-215-397-00	s	METAL 100 1% 1/6W
R52	1-215-397-00	s	METAL 100 1% 1/6W
R53	1-215-397-00	s	METAL 100 1% 1/6W
R54	1-215-397-00	s	METAL 100 1% 1/6W
R55	1-215-397-00	s	METAL 100 1% 1/6W
R56	1-215-397-00	s	METAL 100 1% 1/6W
R57	1-215-453-00	s	METAL 22k 1% 1/6W
R58	1-215-445-00	s	METAL 10k 1% 1/6W
R59	1-215-457-00	s	METAL 33k 1% 1/6W
R60	1-215-429-00	s	METAL 2.2k 1% 1/6W
R61	1-215-457-00	s	METAL 33k 1% 1/6W
R62	1-215-453-00	s	METAL 22k 1% 1/6W
R63	1-215-429-00	s	METAL 2.2k 1% 1/6W
R64	1-215-421-00	s	METAL 1k 1% 1/6W
R65	1-215-394-00	s	METAL 75 1% 1/6W
R66	1-215-459-00	s	METAL 39k 1% 1/6W
R67	1-215-445-00	s	METAL 10k 1% 1/6W
R68	1-215-445-00	s	METAL 10k 1% 1/6W
R69	1-215-429-00	s	METAL 2.2k 1% 1/6W
R70	1-215-475-00	s	METAL 180k 1% 1/6W
R71	1-215-421-00	s	METAL 1k 1% 1/6W
R72	1-215-421-00	s	METAL 1k 1% 1/6W
R73	1-215-421-00	s	METAL 1k 1% 1/6W
R74	1-215-438-00	s	METAL 5.1k 1% 1/6W
R75	1-215-390-00	s	METAL 51 1% 1/6W
R76	1-215-381-00	s	METAL 22 1% 1/6W
R78	1-215-381-00	s	METAL 22 1% 1/6W
R79	1-215-453-00	s	METAL 22k 1% 1/6W
R80	1-215-381-00	s	METAL 22 1% 1/6W
R81	1-215-381-00	s	METAL 22 1% 1/6W
R82	1-215-431-00	s	METAL 2.7k 1% 1/6W
R83	1-215-437-00	s	METAL 4.7k 1% 1/6W
R84	1-215-381-00	s	METAL 22 1% 1/6W
R85	1-215-381-00	s	METAL 22 1% 1/6W
R87	1-215-457-00	s	METAL 33k 1% 1/6W
R89	1-215-433-00	s	METAL 3.3k 1% 1/6W
R91	1-215-458-00	s	METAL 36k 1% 1/6W
R93	1-215-409-00	s	METAL 330 1% 1/6W
R94	1-215-409-00	s	METAL 330 1% 1/6W
R95	1-215-399-00	s	METAL 120 1% 1/6W
R96	1-215-399-00	s	METAL 120 1% 1/6W
R97	1-215-399-00	s	METAL 120 1% 1/6W
R98	1-215-399-00	s	METAL 120 1% 1/6W
R99	1-215-399-00	s	METAL 120 1% 1/6W
R100	1-215-399-00	s	METAL 120 1% 1/6W
R101	1-215-399-00	s	METAL 120 1% 1/6W
R102	1-215-399-00	s	METAL 120 1% 1/6W
R103	1-215-399-00	s	METAL 120 1% 1/6W
R104	1-215-399-00	s	METAL 120 1% 1/6W
R105	1-215-399-00	s	METAL 120 1% 1/6W
R106	1-215-399-00	s	METAL 120 1% 1/6W
R107	1-215-381-00	s	METAL 22 1% 1/6W
R108	1-215-381-00	s	METAL 22 1% 1/6W
R109	1-215-381-00	s	METAL 22 1% 1/6W
R110	1-215-381-00	s	METAL 22 1% 1/6W
R126	1-215-390-00	s	METAL 51 1% 1/6W
R127	1-215-373-31	s	METAL 10 1% 1/6W

NOTE : For the parts marked # in the parts list, refer to "Section 23 Changed Parts".

(MOA-05 BOARD/BOARD NO. 1-639-121-11/-12(DVR-2000/2100))

Ref. No. or Q'ty	Part No.	SP	Description
R128	1-215-453-00	s	METAL 22k 1% 1/6W
R129	1-215-437-00	s	METAL 4.7k 1% 1/6W
R130	1-215-437-00	s	METAL 4.7k 1% 1/6W
R131	1-215-437-00	s	METAL 4.7k 1% 1/6W
R132	1-215-461-00	s	METAL 47k 1% 1/6W
R133	1-215-493-00	s	METAL 1M 1% 1/6W
R134	1-215-493-00	s	METAL 1M 1% 1/6W
R135	1-215-421-00	s	METAL 1k 1% 1/6W
R145	1-215-475-00	s	METAL 180k 1% 1/6W
R146	1-215-421-00	s	METAL 1k 1% 1/6W
R147	1-215-421-00	s	METAL 1k 1% 1/6W
R148	1-215-421-00	s	METAL 1k 1% 1/6W
R149	1-215-438-00	s	METAL 5.1k 1% 1/6W
R150	1-215-390-00	s	METAL 51 1% 1/6W
R151	1-215-381-00	s	METAL 22 1% 1/6W
R152	1-215-437-00	s	METAL 4.7k 1% 1/6W
R153	1-215-381-00	s	METAL 22 1% 1/6W
R154	1-215-475-00	s	METAL 180k 1% 1/6W
R155	1-215-421-00	s	METAL 1k 1% 1/6W
R156	1-215-421-00	s	METAL 1k 1% 1/6W
R157	1-215-421-00	s	METAL 1k 1% 1/6W
R158	1-215-438-00	s	METAL 5.1k 1% 1/6W
R159	1-215-390-00	s	METAL 51 1% 1/6W
R160	1-215-429-00	s	METAL 2.2k 1% 1/6W
R161	1-215-475-00	s	METAL 180k 1% 1/6W
R162	1-215-421-00	s	METAL 1k 1% 1/6W
R163	1-215-421-00	s	METAL 1k 1% 1/6W
R164	1-215-421-00	s	METAL 1k 1% 1/6W
R165	1-215-390-00	s	METAL 51 1% 1/6W
R166	1-215-381-00	s	METAL 22 1% 1/6W
R167	1-215-381-00	s	METAL 22 1% 1/6W
R168	1-215-475-00	s	METAL 180k 1% 1/6W
R169	1-215-421-00	s	METAL 1k 1% 1/6W
R170	1-215-421-00	s	METAL 1k 1% 1/6W
R171	1-215-390-00	s	METAL 51 1% 1/6W
R172	1-215-453-00	s	METAL 22k 1% 1/6W
R173	1-215-381-00	s	METAL 22 1% 1/6W
R174	1-215-381-00	s	METAL 22 1% 1/6W
R175	1-215-433-00	s	METAL 3.3k 1% 1/6W
R178	1-215-444-00	s	METAL 9.1k 1% 1/6W
R181	1-215-447-00	s	METAL 12k 1% 1/6W
R182	1-215-409-00	s	METAL 330 1% 1/6W
R183	1-215-409-00	s	METAL 330 1% 1/6W
R184	1-215-399-00	s	METAL 120 1% 1/6W
R185	1-215-399-00	s	METAL 120 1% 1/6W
R186	1-215-399-00	s	METAL 120 1% 1/6W
R187	1-215-399-00	s	METAL 120 1% 1/6W
R188	1-215-399-00	s	METAL 120 1% 1/6W
R189	1-215-399-00	s	METAL 120 1% 1/6W
R190	1-215-399-00	s	METAL 120 1% 1/6W
R191	1-215-399-00	s	METAL 120 1% 1/6W
R192	1-215-399-00	s	METAL 120 1% 1/6W
R193	1-215-399-00	s	METAL 120 1% 1/6W
R194	1-215-399-00	s	METAL 120 1% 1/6W
R195	1-215-399-00	s	METAL 120 1% 1/6W
R196	1-215-381-00	s	METAL 22 1% 1/6W
R197	1-215-381-00	s	METAL 22 1% 1/6W
R198	1-215-381-00	s	METAL 22 1% 1/6W
R199	1-215-381-00	s	METAL 22 1% 1/6W

NOTE : Please see page 22-42 for the parts that are not listed in the parts list.

(MOA-05 BOARD/BOARD NO. 1-639-121-11/-12(DVR-2000/2100))

Ref. No. or Q'ty	Part No.	SP	Description
R200	1-215-381-00	s	METAL 22 1% 1/6W
R201	1-215-381-00	s	METAL 22 1% 1/6W
R202	1-215-381-00	s	METAL 22 1% 1/6W
R203	1-215-381-00	s	METAL 22 1% 1/6W
R204	1-215-453-00	s	METAL 22k 1% 1/6W
R205	1-215-433-00	s	METAL 3.3k 1% 1/6W
R208	1-215-444-00	s	METAL 9.1k 1% 1/6W
R211	1-215-447-00	s	METAL 12k 1% 1/6W
R212	1-215-381-00	s	METAL 22 1% 1/6W
R213	1-215-381-00	s	METAL 22 1% 1/6W
R214	1-215-409-00	s	METAL 330 1% 1/6W
R215	1-215-409-00	s	METAL 330 1% 1/6W
R216	1-215-399-00	s	METAL 120 1% 1/6W
R217	1-215-399-00	s	METAL 120 1% 1/6W
R218	1-215-399-00	s	METAL 120 1% 1/6W
R219	1-215-399-00	s	METAL 120 1% 1/6W
R220	1-215-399-00	s	METAL 120 1% 1/6W
R221	1-215-399-00	s	METAL 120 1% 1/6W
R222	1-215-399-00	s	METAL 120 1% 1/6W
R223	1-215-399-00	s	METAL 120 1% 1/6W
R224	1-215-399-00	s	METAL 120 1% 1/6W
R225	1-215-399-00	s	METAL 120 1% 1/6W
R226	1-215-399-00	s	METAL 120 1% 1/6W
R227	1-215-399-00	s	METAL 120 1% 1/6W
R228	1-215-445-00	s	METAL 10k 1% 1/6W
R229	1-215-445-00	s	METAL 10k 1% 1/6W
R230	1-215-453-00	s	METAL 22k 1% 1/6W
#R232	1-215-404-00	s	METAL 200 1% 1/6W
R233	1-215-453-00	s	METAL 22k 1% 1/6W
R234	1-215-421-00	s	METAL 1k 1% 1/6W
R235	1-215-445-00	s	METAL 10k 1% 1/6W
R242	1-215-461-00	s	METAL 47k 1% 1/6W
R243	1-215-381-00	s	METAL 22 1% 1/6W
R244	1-215-381-00	s	METAL 22 1% 1/6W
R245	1-215-381-00	s	METAL 22 1% 1/6W
R246	1-215-381-00	s	METAL 22 1% 1/6W
R247	1-215-381-00	s	METAL 22 1% 1/6W
R248	1-215-381-00	s	METAL 22 1% 1/6W
R249	1-215-407-00	s	METAL 270 1% 1/6W
R250	1-215-407-00	s	METAL 270 1% 1/6W
R251	1-215-459-00	s	METAL 39k 1% 1/6W
R252	1-215-445-00	s	METAL 10k 1% 1/6W
R253	1-215-397-00	s	METAL 100 1% 1/6W
R254	1-215-397-00	s	METAL 100 1% 1/6W
R255	1-215-397-00	s	METAL 100 1% 1/6W
R256	1-215-397-00	s	METAL 100 1% 1/6W
R257	1-215-397-00	s	METAL 100 1% 1/6W
R258	1-215-397-00	s	METAL 100 1% 1/6W
R259	1-215-425-00	s	METAL 1.5k 1% 1/6W
R260	1-215-441-00	s	METAL 6.8k 1% 1/6W
#R261	1-215-404-00	s	METAL 200 1% 1/6W
R262	1-215-433-00	s	METAL 3.3k 1% 1/6W
R263	1-215-399-00	s	METAL 120 1% 1/6W
R264	1-215-421-00	s	METAL 1k 1% 1/6W
R265	1-215-421-00	s	METAL 1k 1% 1/6W
R266	1-215-433-00	s	METAL 3.3k 1% 1/6W
R267	1-215-453-00	s	METAL 22k 1% 1/6W
R268	1-215-467-00	s	METAL 82k 1% 1/6W
R269	1-215-493-00	s	METAL 1M 1% 1/6W

NOTE : For the parts marked # in the parts list, refer to "Section 23 Changed Parts".

(MOA-05 BOARD/BOARD NO. 1-639-121-11/-12(DVR-2000/2100))

Ref. No. or Q'ty	Part No.	SP	Description
R270	1-215-425-00	s	METAL 1.5k 1% 1/6W
R271	1-215-441-00	s	METAL 6.8k 1% 1/6W
#R272	1-215-404-00	s	METAL 200 1% 1/6W
R273	1-215-433-00	s	METAL 3.3k 1% 1/6W
R274	1-215-399-00	s	METAL 120 1% 1/6W
R275	1-215-421-00	s	METAL 1k 1% 1/6W
R276	1-215-421-00	s	METAL 1k 1% 1/6W
R277	1-215-433-00	s	METAL 3.3k 1% 1/6W
R289	1-215-453-00	s	METAL 22k 1% 1/6W
R290	1-215-467-00	s	METAL 82k 1% 1/6W
R291	1-215-493-00	s	METAL 1M 1% 1/6W
R292	1-215-425-00	s	METAL 1.5k 1% 1/6W
R293	1-215-441-00	s	METAL 6.8k 1% 1/6W
#R294	1-215-404-00	s	METAL 200 1% 1/6W
R295	1-215-433-00	s	METAL 3.3k 1% 1/6W
R296	1-215-399-00	s	METAL 120 1% 1/6W
R297	1-215-421-00	s	METAL 1k 1% 1/6W
R298	1-215-421-00	s	METAL 1k 1% 1/6W
R299	1-215-433-00	s	METAL 3.3k 1% 1/6W
R300	1-215-453-00	s	METAL 22k 1% 1/6W
R301	1-215-467-00	s	METAL 82k 1% 1/6W
R302	1-215-493-00	s	METAL 1M 1% 1/6W
R303	1-215-425-00	s	METAL 1.5k 1% 1/6W
R304	1-215-441-00	s	METAL 6.8k 1% 1/6W
#R305	1-215-404-00	s	METAL 200 1% 1/6W
R306	1-215-433-00	s	METAL 3.3k 1% 1/6W
R307	1-215-399-00	s	METAL 120 1% 1/6W
R308	1-215-421-00	s	METAL 1k 1% 1/6W
R309	1-215-421-00	s	METAL 1k 1% 1/6W
R310	1-215-433-00	s	METAL 3.3k 1% 1/6W
R311	1-215-453-00	s	METAL 22k 1% 1/6W
R312	1-215-467-00	s	METAL 82k 1% 1/6W
R313	1-215-493-00	s	METAL 1M 1% 1/6W
R314	1-215-461-00	s	METAL 47k 1% 1/6W
R315	1-215-397-00	s	METAL 100 1% 1/6W
R316	1-215-420-00	s	METAL 910 1% 1/6W
R317	1-215-429-00	s	METAL 2.2k 1% 1/6W
R318	1-215-441-00	s	METAL 6.8k 1% 1/6W
#R319	1-215-404-00	s	METAL 200 1% 1/6W
R320	1-215-441-00	s	METAL 6.8k 1% 1/6W
#R321	1-215-404-00	s	METAL 200 1% 1/6W
R322	1-215-441-00	s	METAL 6.8k 1% 1/6W
#R323	1-215-404-00	s	METAL 200 1% 1/6W
R324	1-215-441-00	s	METAL 6.8k 1% 1/6W
#R325	1-215-404-00	s	METAL 200 1% 1/6W
R326	1-215-397-00	s	METAL 100 1% 1/6W
R327	1-215-397-00	s	METAL 100 1% 1/6W
R328	1-215-412-00	s	METAL 430 1% 1/6W
R329	1-215-412-00	s	METAL 430 1% 1/6W
R330	1-215-412-00	s	METAL 430 1% 1/6W
R331	1-215-381-00	s	METAL 22 1% 1/6W
R332	1-215-381-00	s	METAL 22 1% 1/6W
R333	1-215-381-00	s	METAL 22 1% 1/6W
R334	1-215-381-00	s	METAL 22 1% 1/6W
R335	1-215-381-00	s	METAL 22 1% 1/6W
R336	1-215-381-00	s	METAL 22 1% 1/6W
R337	1-215-381-00	s	METAL 22 1% 1/6W
R338	1-215-381-00	s	METAL 22 1% 1/6W
R339	1-215-445-00	s	METAL 10k 1% 1/6W

NOTE : Please see page 22-42 for the parts that are not listed in the parts list.

(MOA-05 BOARD/BOARD NO. 1-639-121-11/-12(DVR-2000/2100))

Ref. No. or Q'ty	Part No.	SP	Description
R340	1-215-421-00	s	METAL 1k 1% 1/6W
R341	1-215-443-00	s	METAL 8.2k 1% 1/6W
R342	1-215-421-00	s	METAL 1k 1% 1/6W
R343	1-215-443-00	s	METAL 8.2k 1% 1/6W
R344	1-215-421-00	s	METAL 1k 1% 1/6W
R345	1-215-443-00	s	METAL 8.2k 1% 1/6W
R346	1-215-421-00	s	METAL 1k 1% 1/6W
R347	1-215-443-00	s	METAL 8.2k 1% 1/6W
R348	1-215-421-00	s	METAL 1k 1% 1/6W
R400	1-215-445-00	s	METAL 10k 1% 1/6W
R401	1-215-493-00	s	METAL 1M 1% 1/6W
R402	1-215-493-00	s	METAL 1M 1% 1/6W
R403	1-215-469-00	s	METAL 100k 1% 1/6W
R404	1-215-469-00	s	METAL 100k 1% 1/6W
#R500	1-216-089-00	s	METAL, CHIP 47k 5% 1/10W
#R501	1-216-089-00	s	METAL, CHIP 47k 5% 1/10W
#R502	1-216-089-00	s	METAL, CHIP 47k 5% 1/10W
#R503	1-216-089-00	s	METAL, CHIP 47k 5% 1/10W
#R504	1-216-089-00	s	METAL, CHIP 47k 5% 1/10W
#R505	1-216-089-00	s	METAL, CHIP 47k 5% 1/10W
#R506	1-216-089-00	s	METAL, CHIP 47k 5% 1/10W
#R507	1-216-089-00	s	METAL, CHIP 47k 5% 1/10W
#R508	1-216-089-00	s	METAL, CHIP 47k 5% 1/10W
#R509	1-216-089-00	s	METAL, CHIP 47k 5% 1/10W
#R510	1-216-089-00	s	METAL, CHIP 47k 5% 1/10W
#R511	1-216-089-00	s	METAL, CHIP 47k 5% 1/10W
#R512	1-216-089-00	s	METAL, CHIP 47k 5% 1/10W
#R513	1-216-089-00	s	METAL, CHIP 47k 5% 1/10W
#R514	1-216-089-00	s	METAL, CHIP 47k 5% 1/10W
#R515	1-216-089-00	s	METAL, CHIP 47k 5% 1/10W
#R516	1-216-089-00	s	METAL, CHIP 47k 5% 1/10W
#R517	1-216-089-00	s	METAL, CHIP 47k 5% 1/10W
#R518	1-216-089-00	s	METAL, CHIP 47k 5% 1/10W
#R519	1-216-089-00	s	METAL, CHIP 47k 5% 1/10W
#R520	1-216-089-00	s	METAL, CHIP 47k 5% 1/10W
#R521	1-216-089-00	s	METAL, CHIP 47k 5% 1/10W
#R522	1-216-089-00	s	METAL, CHIP 47k 5% 1/10W
#R523	1-216-089-00	s	METAL, CHIP 47k 5% 1/10W
#R524	1-216-089-00	s	METAL, CHIP 47k 5% 1/10W
#R525	1-216-089-00	s	METAL, CHIP 47k 5% 1/10W
#R526	1-216-089-00	s	METAL, CHIP 47k 5% 1/10W
#R527	1-216-089-00	s	METAL, CHIP 47k 5% 1/10W
#R528	1-216-089-00	s	METAL, CHIP 47k 5% 1/10W
#R529	1-216-089-00	s	METAL, CHIP 47k 5% 1/10W
#R530	1-216-089-00	s	METAL, CHIP 47k 5% 1/10W
#R531	1-216-089-00	s	METAL, CHIP 47k 5% 1/10W
#R535	1-216-089-00	s	METAL, CHIP 47k 5% 1/10W
#R536	1-216-089-00	s	METAL, CHIP 47k 5% 1/10W
#R537	1-216-089-00	s	METAL, CHIP 47k 5% 1/10W
#R538	1-216-089-00	s	METAL, CHIP 47k 5% 1/10W
#R539	1-216-089-00	s	METAL, CHIP 47k 5% 1/10W
#R540	1-216-089-00	s	METAL, CHIP 47k 5% 1/10W
#R541	1-216-089-00	s	METAL, CHIP 47k 5% 1/10W
#R542	1-216-089-00	s	METAL, CHIP 47k 5% 1/10W
#R543	1-216-089-00	s	METAL, CHIP 47k 5% 1/10W
#R544	1-216-089-00	s	METAL, CHIP 47k 5% 1/10W
#R545	1-216-089-00	s	METAL, CHIP 47k 5% 1/10W
#R546	1-216-089-00	s	METAL, CHIP 47k 5% 1/10W
#R547	1-216-089-00	s	METAL, CHIP 47k 5% 1/10W

NOTE : For the parts marked # in the parts list, refer to "Section 23 Changed Parts".

(MOA-05 BOARD/BOARD NO. 1-639-121-11/-12(DVR-2000/2100))

Ref. No. or Q'ty	Part No.	SP	Description
RV1	1-237-520-21	s	RES, ADJ METAL 50k
RV2	1-237-519-21	s	RES, ADJ METAL 20k
RV6	1-237-517-21	s	RES, ADJ METAL 5k
RV7	1-237-521-21	s	RES, ADJ METAL 100k
RV8	1-237-519-21	s	RES, ADJ METAL 20k
RV9	1-237-519-21	s	RES, ADJ METAL 20k
RV11	1-237-519-21	s	RES, ADJ METAL 20k
RV14	1-237-521-21	s	RES, ADJ METAL 100k
RV15	1-237-519-21	s	RES, ADJ METAL 20k
RV16	1-237-521-21	s	RES, ADJ METAL 100k
RV17	1-237-519-21	s	RES, ADJ METAL 20k
RV18	1-237-521-21	s	RES, ADJ METAL 100k
RV19	1-237-519-21	s	RES, ADJ METAL 20k
RV20	1-237-521-21	s	RES, ADJ METAL 100k
RV21	1-237-519-21	s	RES, ADJ METAL 20k
RY1	1-515-691-11	s	RELAY
RY2	1-515-683-11	s	RELAY
RY3	1-515-683-11	s	RELAY
RY4	1-515-683-11	s	RELAY
RY5	1-515-683-11	s	RELAY

NOTE : Please see page 22-42 for the parts that are not listed in the parts list.

MOA-05 BOARD/BOARD NO. 1-639-121-13(DVR-2000/2100)

Ref. No. or Q'ty	Part No.	SP	Description
BOARD NO. 1-639-121-13			
DVR-2000(J) : S/N 10201 and higher			
DVR-2000(UC): S/N 10301 and higher			
DVR-2000(EK): S/N 10601 and higher			
DVR-2100(J) : S/N 11001 and higher			
DVR-2100(UC): S/N 11101 and higher			
DVR-2100(EK): S/N 11101 and higher			
#1pc	A-6019-046-C	o	MOUNTED CIRCUIT BOARD, MOA-05
1pc	3-171-895-51	o	LABEL (P), SERIAL NUMBER
2pcs	3-714-634-01	o	LEVER, PC BOARD
2pcs	7-626-320-11	s	PIN, SPRING 3X8
9pcs	7-682-948-01	s	SCREW, +PSW 3x8
4pcs	7-685-547-14	s	SCREW, +BVTP 3x10 TYPE2 N-S
C5	1-162-710-11	s	CERAMIC 100pF 1% 50V
C6	1-162-710-11	s	CERAMIC 100pF 1% 50V
C12	1-162-875-11	s	CERAMIC 68pF 5% 50V
C13	1-162-718-11	s	CERAMIC 220pF 1% 50V
#C17	1-107-698-11	s	ELECT, NONPOLAR 10uF 20% 25V
#C18	1-107-698-11	s	ELECT, NONPOLAR 10uF 20% 25V
#C19	1-107-930-91	s	ELECT 22uF 20% 50V
#C20	1-107-930-91	s	ELECT 22uF 20% 50V
C21	1-162-671-11	s	CERAMIC 22pF 5% 50V
#C22	1-107-930-91	s	ELECT 22uF 20% 50V
C30	1-162-718-11	s	CERAMIC 220pF 1% 50V
#C32	1-104-664-11	s	ELECT 47uF 20% 25V
#C33	1-104-664-11	s	ELECT 47uF 20% 25V
#C34	1-107-889-11	s	ELECT 220uF 20% 25V
#C36	1-107-889-11	s	ELECT 220uF 20% 25V
#C39	1-107-883-11	s	ELECT 330uF 20% 16V
#C41	1-107-883-11	s	ELECT 330uF 20% 16V
#C43	1-107-883-11	s	ELECT 330uF 20% 16V
#C45	1-107-883-11	s	ELECT 330uF 20% 16V
#C48	1-104-664-11	s	ELECT 47uF 20% 25V
#C49	1-104-664-11	s	ELECT 47uF 20% 25V
#C50	1-104-664-11	s	ELECT 47uF 20% 25V
#C51	1-104-664-11	s	ELECT 47uF 20% 25V
C52	1-162-671-11	s	CERAMIC 22PF 5% 50V
C53	1-126-233-11	s	ELECT 22uF 20% 50V
C54	1-126-233-11	s	ELECT 22uF 20% 50V
C55	1-162-671-11	s	CERAMIC 22pF 5% 50V
#C59	1-109-953-11	s	ELECT, NONPOLAR 2.2uF 20% 50V
#C60	1-109-953-11	s	ELECT, NONPOLAR 2.2uF 20% 50V
C61	1-162-710-11	s	CERAMIC 100pF 1% 50V
C62	1-162-710-11	s	CERAMIC 100pF 1% 50V
#C76	1-107-929-11	s	ELECT 10uF 20% 50V
#C77	1-107-929-11	s	ELECT 10uF 20% 50V
C78	1-104-664-11	s	ELECT 47uF 20% 25V
#C80	1-107-929-11	s	ELECT 10uF 20% 50V
#C81	1-107-889-11	s	ELECT 220uF 20% 25V
#C82	1-107-889-11	s	ELECT 220uF 20% 25V
#C83	1-107-889-11	s	ELECT 220uF 20% 25V
#C84	1-107-889-11	s	ELECT 220uF 20% 25V
C92	1-162-718-11	s	CERAMIC 220pF 1% 50V
#C95	1-104-664-11	s	ELECT 47uF 20% 25V
#C96	1-104-664-11	s	ELECT 47uF 20% 25V
C104	1-162-718-11	s	CERAMIC 220pF 1% 50V
C114	1-162-710-11	s	CERAMIC 100pF 1% 50V
C115	1-130-475-00	s	MYLAR 0.0022uF 5% 50V

NOTE : For the parts marked # in the parts list, refer to "Section 23 Changed Parts".

(MOA-05 BOARD/BOARD NO. 1-639-121-13(DVR-2000/2100))

Ref. No. or Q'ty	Part No.	SP	Description
#C116	1-104-664-11	s	ELECT 47uF 20% 25V
#C117	1-104-664-11	s	ELECT 47uF 20% 25V
C125	1-162-710-11	s	CERAMIC 100pF 1% 50V
#C129	1-104-664-11	s	ELECT 47uF 20% 25V
#C130	1-104-664-11	s	ELECT 47uF 20% 25V
C131	1-126-233-11	s	ELECT 22uF 20% 50V
C132	1-126-233-11	s	ELECT 22uF 20% 50V
C133	1-162-708-11	s	CERAMIC 82pF 1% 50V
C134	1-162-708-11	s	CERAMIC 82pF 1% 50V
C137	1-126-233-11	s	ELECT 22uF 20% 50V
C138	1-126-233-11	s	ELECT 22uF 20% 50V
C139	1-162-708-11	s	CERAMIC 82pF 1% 50V
C140	1-162-708-11	s	CERAMIC 82pF 1% 50V
#C141	1-104-664-11	s	ELECT 47uF 20% 25V
#C142	1-104-664-11	s	ELECT 47uF 20% 25V
#C145	1-107-929-11	s	ELECT 10uF 20% 50V
C146	1-130-483-00	s	MYLAR 0.01uF 5% 50V
#C147	1-107-889-11	s	ELECT 220uF 20% 25V
#C148	1-107-889-11	s	ELECT 220uF 20% 25V
#C149	1-107-889-11	s	ELECT 220uF 20% 25V
#C150	1-107-889-11	s	ELECT 220uF 20% 25V
#C151	1-107-889-11	s	ELECT 220uF 20% 25V
#C152	1-107-889-11	s	ELECT 220uF 20% 25V
#C153	1-107-889-11	s	ELECT 220uF 20% 25V
#C154	1-107-889-11	s	ELECT 220uF 20% 25V
#C157	1-107-883-11	s	ELECT 330uF 20% 16V
C158	1-162-710-11	s	CERAMIC 100pF 1% 50V
C159	1-162-710-11	s	CERAMIC 100pF 1% 50V
C160	1-162-710-11	s	CERAMIC 100pF 1% 50V
C164	1-162-710-11	s	CERAMIC 100pF 1% 50V
#C201	1-104-664-11	s	ELECT 47uF 20% 25V
#C202	1-104-664-11	s	ELECT 47uF 20% 25V
#C213	1-104-664-11	s	ELECT 47uF 20% 25V
#C214	1-104-664-11	s	ELECT 47uF 20% 25V
#C224	1-104-664-11	s	ELECT 47uF 20% 25V
#C225	1-104-664-11	s	ELECT 47uF 20% 25V
#C226	1-104-664-11	s	ELECT 47uF 20% 25V
#C227	1-104-664-11	s	ELECT 47uF 20% 25V
#C230	1-104-664-11	s	ELECT 47uF 20% 25V
#C231	1-104-664-11	s	ELECT 47uF 20% 25V
#C241	1-104-664-11	s	ELECT 47uF 20% 25V
#C242	1-104-664-11	s	ELECT 47uF 20% 25V
#C243	1-104-664-11	s	ELECT 47uF 20% 25V
#C244	1-104-664-11	s	ELECT 47uF 20% 25V
#C254	1-104-664-11	s	ELECT 47uF 20% 25V
#C256	1-107-930-91	s	ELECT 22uF 20% 50V
#C257	1-107-930-91	s	ELECT 22uF 20% 50V
#C258	1-104-664-11	s	ELECT 47uF 20% 25V
#C259	1-104-664-11	s	ELECT 47uF 20% 25V
#C262	1-104-664-11	s	ELECT 47uF 20% 25V
#C263	1-104-664-11	s	ELECT 47uF 20% 25V
#C264	1-104-664-11	s	ELECT 47uF 20% 25V
#C265	1-104-664-11	s	ELECT 47uF 20% 25V
#C266	1-104-664-11	s	ELECT 47uF 20% 25V
#C267	1-104-664-11	s	ELECT 47uF 20% 25V
#C276	1-104-664-11	s	ELECT 47uF 20% 25V
#C277	1-104-664-11	s	ELECT 47uF 20% 25V
C281	1-130-483-00	s	MYLAR 0.01uF 5% 50V
C282	1-130-475-00	s	MYLAR 0.0022uF 5% 50V

NOTE : Please see page 22-42 for the parts that are not listed in the parts list.

(MOA-05 BOARD/BOARD NO. 1-639-121-13(DVR-2000/2100))

Ref. No. or Q'ty	Part No.	SP	Description
C285	1-130-483-00	s	MYLAR 0.01uF 5% 50V
C286	1-130-475-00	s	MYLAR 0.0022uF 5% 50V
C287	1-130-483-00	s	MYLAR 0.01uF 5% 50V
C288	1-130-475-00	s	MYLAR 0.0022uF 5% 50V
C290	1-130-483-00	s	MYLAR 0.01uF 5% 50V
C291	1-130-475-00	s	MYLAR 0.0022uF 5% 50V
#C295	1-104-664-11	s	ELECT 47uF 20% 25V
#C296	1-104-664-11	s	ELECT 47uF 20% 25V
#C297	1-104-664-11	s	ELECT 47uF 20% 25V
#C298	1-104-664-11	s	ELECT 47uF 20% 25V
#C299	1-104-664-11	s	ELECT 47uF 20% 25V
#C300	1-104-664-11	s	ELECT 47uF 20% 25V
#C406	1-104-664-11	s	ELECT 47uF 20% 25V
C407	1-104-792-51	s	ELECT 33uF 20% 16V
#C408	1-126-786-11	s	ELECT 47uF 20% 16V
#C409	1-126-933-11	s	ELECT 100uF 20% 16V
#C410	1-104-664-11	s	ELECT 47uF 20% 25V
#C411	1-104-664-11	s	ELECT 47uF 20% 25V
#C412	1-107-883-11	s	ELECT 330uF 20% 16V
#C413	1-107-883-11	s	ELECT 330uF 20% 16V
#C414	1-107-883-11	s	ELECT 330uF 20% 16V
#C415	1-107-883-11	s	ELECT 330uF 20% 16V
#C416	1-107-883-11	s	ELECT 330uF 20% 16V
#C417	1-107-889-11	s	ELECT 220uF 20% 25V
#C418	1-107-889-11	s	ELECT 220uF 20% 25V
#C450	1-104-664-11	s	ELECT 47uF 20% 25V
#C451	1-104-664-11	s	ELECT 47uF 20% 25V
#C452	1-104-664-11	s	ELECT 47uF 20% 25V
#C453	1-104-664-11	s	ELECT 47uF 20% 25V
#C454	1-104-664-11	s	ELECT 47uF 20% 25V
#C455	1-104-664-11	s	ELECT 47uF 20% 25V
#C456	1-104-664-11	s	ELECT 47uF 20% 25V
#C457	1-104-664-11	s	ELECT 47uF 20% 25V
#C458	1-104-664-11	s	ELECT 47uF 20% 25V
#C459	1-104-664-11	s	ELECT 47uF 20% 25V
#C460	1-104-664-11	s	ELECT 47uF 20% 25V
#C461	1-104-664-11	s	ELECT 47uF 20% 25V
#C464	1-104-664-11	s	ELECT 47uF 20% 25V
#C466	1-104-664-11	s	ELECT 47uF 20% 25V
#C468	1-104-664-11	s	ELECT 47uF 20% 25V
#C470	1-104-664-11	s	ELECT 47uF 20% 25V
#C473	1-104-664-11	s	ELECT 47uF 20% 25V
#C474	1-104-664-11	s	ELECT 47uF 20% 25V
#C475	1-104-664-11	s	ELECT 47uF 20% 25V
#C477	1-104-664-11	s	ELECT 47uF 20% 25V
#C479	1-104-664-11	s	ELECT 47uF 20% 25V
#C481	1-104-664-11	s	ELECT 47uF 20% 25V
C492	1-130-475-00	s	MYLAR 0.0022uF 5% 50V
C493	1-130-475-00	s	MYLAR 0.0022uF 5% 50V
C494	1-130-472-00	s	MYLAR 0.0012uF 5% 50V
C495	1-130-472-00	s	MYLAR 0.0012uF 5% 50V
CN511	1-565-207-21	s	CONNECTOR, DIN 128P, MALE
CN512	1-565-207-21	s	CONNECTOR, DIN 128P, MALE
D1	8-719-911-19	s	DIODE 1SS119
D2	8-719-016-42	s	DIODE MC932TP
D3	8-719-016-42	s	DIODE MC932TP
D4	8-719-016-42	s	DIODE MC932TP
D5	8-719-016-42	s	DIODE MC932TP

NOTE : For the parts marked # in the parts list, refer to "Section 23 Changed Parts".

(MOA-05 BOARD/BOARD NO. 1-639-121-13(DVR-2000/2100))

Ref. No. or Q'ty	Part No.	SP	Description
D6	8-719-016-42	s	DIODE MC932TP
D7	8-719-911-19	s	DIODE 1SS119
D8	8-719-911-19	s	DIODE 1SS119
D9	8-719-911-19	s	DIODE 1SS119
D10	8-719-911-19	s	DIODE 1SS119
#FL1	1-236-127-21	s	FILTER, LOW PASS
#FL3	1-236-127-21	s	FILTER, LOW PASS
#FL4	1-236-127-21	s	FILTER, LOW PASS
#FL5	1-236-127-21	s	FILTER, LOW PASS
#FL8	1-236-127-21	s	FILTER, LOW PASS
ICB7	8-759-916-14	s	IC SN74HC04N
ICB8	8-759-916-12	s	IC SN74HC00N
ICB10	8-759-602-83	s	IC M5238P
ICB11	8-759-168-20	s	IC NJM78L09A
ICB12	8-759-700-68	s	IC NJM79L09A
ICB14	8-759-915-76	s	IC TL7700CP
ICB15	8-759-903-74	s	IC SN74LS374N
ICB16	8-759-926-32	s	IC AM26LS32PC
ICB17	8-759-916-21	s	IC SN74HC20N
ICB18	8-759-945-30	s	IC SN75ALS194N
ICB19	8-759-926-32	s	IC AM26LS32PC
ICB2A	8-759-602-01	s	IC M5220P
ICB2B	8-759-602-01	s	IC M5220P
ICB20	8-759-917-06	s	IC SN74HC574N
ICB21	8-759-917-06	s	IC SN74HC574N
ICB22	8-759-917-06	s	IC SN74HC574N
ICB3A	8-759-602-01	s	IC M5220P
ICB3B	8-759-602-01	s	IC M5220P
ICB4A	8-759-602-01	s	IC M5220P
ICB4B	8-759-602-01	s	IC M5220P
ICC2	8-759-602-01	s	IC M5220P
ICC4	8-759-602-83	s	IC M5238P
ICC6	8-759-145-58	s	IC UPC4558C
ICC7	8-759-145-58	s	IC UPC4558C
ICC8	8-759-145-58	s	IC UPC4558C
ICC9	8-759-145-58	s	IC UPC4558C
ICC14	8-759-916-16	s	IC MC74HC08AN
ICC16	8-759-902-40	s	IC SN74LS240N
ICC17	8-759-900-08	s	IC SN74LS08N
ICC18	8-759-902-40	s	IC SN74LS240N
ICC19	8-759-916-14	s	IC SN74HC04N
ICC20	8-759-916-16	s	IC MC74HC08AN
ICC21	8-759-147-02	s	IC UPD42101C-3
ICC22	8-759-046-04	s	IC 16V8-MOA0506-1, PLD
ICD2	8-759-602-83	s	IC M5238P
ICD4	8-759-602-83	s	IC M5238P
ICD6	8-759-145-58	s	IC UPC4558C
ICD7	8-759-000-47	s	IC MC14051BCP
ICD8	8-759-140-53	s	IC UPD4053BC
ICD9	8-759-000-48	s	IC MC14052BCP
ICE3	8-759-982-03	s	IC RC5532DD
ICE7	8-759-145-58	s	IC UPC4558C
ICE9	8-759-602-83	s	IC M5238P
ICE13	8-759-916-53	s	IC SN74HC166N
ICE14	8-759-921-22	s	IC SN74HC164AN
ICE16	8-759-518-08	s	IC CXD8201Q
ICE20	8-759-081-87	o	IC 5032PC-MOA0504-2, PLD
ICE21	8-759-081-88	o	IC 5032PC-MOA0505-1, PLD
ICE22	8-759-081-88	o	IC 5032PC-MOA0505-1, PLD

NOTE : Please see page 22-42 for the parts that are not listed in the parts list.

(MOA-05 BOARD/BOARD NO. 1-639-121-13(DVR-2000/2100))

Ref. No. or Q'ty	Part No.	SP	Description
ICF13	8-759-916-53	s	IC SN74HC166N
ICF14	8-759-921-22	s	IC SN74HC164AN
ICF16	8-759-916-14	s	IC SN74HC04N
ICF17	8-759-147-02	s	IC UPD42101C-3
ICF18	8-759-147-02	s	IC UPD42101C-3
ICF19	8-759-147-02	s	IC UPD42101C-3
ICF20	8-759-917-06	s	IC SN74HC574N
ICF21	8-759-917-06	s	IC SN74HC574N
ICF22	8-759-917-06	s	IC SN74HC574N
ICG3	8-759-602-83	s	IC M5238P
ICG12	8-759-700-65	s	IC NJM79L05A
ICG7A	8-759-982-03	s	IC RC5532DD
ICG7B	8-759-982-03	s	IC RC5532DD
ICG8A	8-759-982-03	s	IC RC5532DD
ICG8B	8-759-982-03	s	IC RC5532DD
ICG9A	8-759-982-03	s	IC RC5532DD
ICG9B	8-759-982-03	s	IC RC5532DD
ICG10A	8-759-982-03	s	IC RC5532DD
ICG10B	8-759-982-03	s	IC RC5532DD
ICH2	8-759-140-53	s	IC UPD4053BC
ICH4	8-759-602-83	s	IC M5238P
ICH7	8-759-982-03	s	IC RC5532DD
ICH8	8-759-982-03	s	IC RC5532DD
ICH9	8-759-982-03	s	IC RC5532DD
ICH10	8-759-982-03	s	IC RC5532DD
ICH12	8-759-708-05	s	IC NJM78L05A
ICH13	8-759-996-76	s	IC AK5327-VP
ICH16	8-752-357-15	s	IC CXD2343S
ICH17	8-759-917-05	s	IC SN74HC541N
ICH19	8-759-518-14	s	IC CXD8248Q
ICH21	8-759-517-87	s	IC CXD8093Q
ICJ2	8-759-916-14	s	IC SN74HC04N
ICJ3	8-759-000-48	s	IC MC14052BCP
ICK7	8-759-602-01	s	IC M5220P
ICK9	8-759-602-01	s	IC M5220P
#ICK16	8-759-081-70	o	IC 7C225-MOA0501-2, PROM
ICK18	8-759-045-99	s	IC 7C225-MOA0502-1, PROM
ICK19	8-759-056-63	s	IC 7C225-MOA0503-2, PLD
ICK21	8-759-921-22	s	IC SN74HC164AN
ICK22	8-759-916-53	s	IC SN74HC166N
ICL3	8-759-103-93	s	IC UPC393C
ICL4	8-759-032-81	s	IC MC74HC74N
ICL11	8-759-982-03	s	IC RC5532DD
ICL13	8-759-510-35	s	IC PCM63P-K
ICM3	8-759-103-93	s	IC UPC393C
ICM7	8-759-982-03	s	IC RC5532DD
#ICM17	8-759-062-40	s	IC SM5842APT
ICM18	8-759-921-22	s	IC SN74HC164AN
ICM19	8-759-921-22	s	IC SN74HC164AN
ICM20	8-759-921-22	s	IC SN74HC164AN
ICM21	8-759-921-22	s	IC SN74HC164AN
ICM22	8-759-921-22	s	IC SN74HC164AN
ICN5	8-759-982-03	s	IC RC5532DD
ICN7	8-759-982-03	s	IC RC5532DD
ICN11	8-759-982-03	s	IC RC5532DD
ICN13	8-759-510-35	s	IC PCM63P-K

NOTE : For the parts marked # in the parts list, refer to "Section 23 Changed Parts".

(MOA-05 BOARD/BOARD NO. 1-639-121-13(DVR-2000/2100))

Ref. No. or Q'ty	Part No.	SP	Description
ICN18	8-759-916-53	s	IC SN74HC166N
ICN19	8-759-916-53	s	IC SN74HC166N
ICN20	8-759-916-53	s	IC SN74HC166N
ICN21	8-759-916-53	s	IC SN74HC166N
ICN22	8-759-916-53	s	IC SN74HC166N
ICN3A	8-759-982-03	s	IC RC5532DD
ICN3B	8-759-942-43	s	IC PCM56P-K
ICP3	8-759-999-32	s	IC SM5813APT
ICP7	8-759-982-03	s	IC RC5532DD
ICP13	8-759-942-43	s	IC PCM56P-K
ICP17	8-759-999-32	s	IC SM5813APT
ICP20	8-759-921-22	s	IC SN74HC164AN
ICP21	8-759-916-53	s	IC SN74HC166N
ICR7	8-759-982-03	s	IC RC5532DD
ICR11	8-759-982-03	s	IC RC5532DD
ICR13	8-759-942-43	s	IC PCM56P-K
ICS11	8-759-982-03	s	IC RC5532DD
L1	1-460-085-11	s	COIL, CHOKE 6.8uH
L2	1-460-085-11	s	COIL, CHOKE 6.8uH
L3	1-460-085-11	s	COIL, CHOKE 6.8uH
L4	1-460-085-11	s	COIL, CHOKE 6.8uH
L5	1-460-085-11	s	COIL, CHOKE 6.8uH
L6	1-460-085-11	s	COIL, CHOKE 6.8uH
L7	1-460-085-11	s	COIL, CHOKE 6.8uH
Q1	8-729-900-74	s	TRANSISTOR DTC143TS
Q2	8-729-900-74	s	TRANSISTOR DTC143TS
Q3	8-729-119-78	s	TRANSISTOR 2SC2785-HFE
Q4	8-729-900-74	s	TRANSISTOR DTC143TS
Q5	8-729-900-74	s	TRANSISTOR DTC143TS
Q6	8-729-900-74	s	TRANSISTOR DTC143TS
Q7	8-729-900-74	s	TRANSISTOR DTC143TS
Q8	8-729-900-74	s	TRANSISTOR DTC143TS
Q10	8-729-993-72	s	TRANSISTOR 2SA937-Q
Q11	8-729-027-23	s	TRANSISTOR 2SK435E
Q12	8-729-993-72	s	TRANSISTOR 2SA937-Q
Q13	8-729-027-23	s	TRANSISTOR 2SK435E
Q14	8-729-993-72	s	TRANSISTOR 2SA937-Q
Q15	8-729-027-23	s	TRANSISTOR 2SK435E
Q17	8-729-993-72	s	TRANSISTOR 2SA937-Q
Q18	8-729-027-23	s	TRANSISTOR 2SK435E
Q19	8-729-900-74	s	TRANSISTOR DTC143TS
R1	1-215-416-00	s	METAL 620 1% 1/6W
R2	1-215-401-11	s	METAL 150 1% 1/6W
R3	1-215-461-00	s	METAL 47k 1% 1/6W
R4	1-215-421-00	s	METAL 1k 1% 1/6W
R5	1-215-452-00	s	METAL 20k 1% 1/6W
R6	1-215-445-00	s	METAL 10k 1% 1/6W
R7	1-215-445-00	s	METAL 10k 1% 1/6W
R8	1-215-445-00	s	METAL 10k 1% 1/6W
R9	1-215-445-00	s	METAL 10k 1% 1/6W
R10	1-215-452-00	s	METAL 20k 1% 1/6W
R11	1-215-422-00	s	METAL 1.1k 1% 1/6W
R12	1-215-453-00	s	METAL 22k 1% 1/6W
R13	1-215-412-00	s	METAL 430 1% 1/6W
R14	1-215-445-00	s	METAL 10k 1% 1/6W
R15	1-215-453-00	s	METAL 22k 1% 1/6W

NOTE : Please see page 22-42 for the parts that are not listed in the parts list.

(MOA-05 BOARD/BOARD NO. 1-639-121-13(DVR-2000/2100))

Ref. No. or Q'ty	Part No.	SP	Description
R18	1-215-429-00	s	METAL 2.2k 1% 1/6W
R29	1-215-453-00	s	METAL 22k 1% 1/6W
R30	1-215-433-00	s	METAL 3.3k 1% 1/6W
R31	1-215-433-00	s	METAL 3.3k 1% 1/6W
R32	1-215-445-00	s	METAL 10k 1% 1/6W
R33	1-215-445-00	s	METAL 10k 1% 1/6W
R34	1-215-413-00	s	METAL 470 1% 1/6W
R35	1-215-445-00	s	METAL 10k 1% 1/6W
R36	1-215-445-00	s	METAL 10k 1% 1/6W
R37	1-215-493-00	s	METAL 1M 1% 1/6W
R38	1-215-445-00	s	METAL 10k 1% 1/6W
R40	1-215-445-00	s	METAL 10k 1% 1/6W
R41	1-215-453-00	s	METAL 22k 1% 1/6W
R42	1-215-409-00	s	METAL 330 1% 1/6W
R43	1-215-445-00	s	METAL 10k 1% 1/6W
R44	1-215-453-00	s	METAL 22k 1% 1/6W
R45	1-215-452-00	s	METAL 20k 1% 1/6W
R46	1-215-445-00	s	METAL 10k 1% 1/6W
R47	1-215-381-00	s	METAL 22 1% 1/6W
R48	1-215-381-00	s	METAL 22 1% 1/6W
R49	1-215-397-00	s	METAL 100 1% 1/6W
R50	1-215-397-00	s	METAL 100 1% 1/6W
R51	1-215-397-00	s	METAL 100 1% 1/6W
R52	1-215-397-00	s	METAL 100 1% 1/6W
R53	1-215-397-00	s	METAL 100 1% 1/6W
R54	1-215-397-00	s	METAL 100 1% 1/6W
R55	1-215-397-00	s	METAL 100 1% 1/6W
R56	1-215-397-00	s	METAL 100 1% 1/6W
R57	1-215-453-00	s	METAL 22k 1% 1/6W
R58	1-215-445-00	s	METAL 10k 1% 1/6W
R59	1-215-457-00	s	METAL 33k 1% 1/6W
R60	1-215-429-00	s	METAL 2.2k 1% 1/6W
R61	1-215-457-00	s	METAL 33k 1% 1/6W
R62	1-215-453-00	s	METAL 22k 1% 1/6W
R63	1-215-429-00	s	METAL 2.2k 1% 1/6W
R64	1-215-421-00	s	METAL 1k 1% 1/6W
R65	1-215-394-00	s	METAL 75 1% 1/6W
R66	1-215-459-00	s	METAL 39k 1% 1/6W
R67	1-215-445-00	s	METAL 10k 1% 1/6W
R68	1-215-445-00	s	METAL 10k 1% 1/6W
R69	1-215-429-00	s	METAL 2.2k 1% 1/6W
R73	1-215-420-00	s	METAL 910 1% 1/6W
R74	1-215-438-00	s	METAL 5.1k 1% 1/6W
R75	1-215-390-00	s	METAL 51 1% 1/6W
R76	1-215-381-00	s	METAL 22 1% 1/6W
R78	1-215-381-00	s	METAL 22 1% 1/6W
R79	1-215-453-00	s	METAL 22k 1% 1/6W
R80	1-215-381-00	s	METAL 22 1% 1/6W
R81	1-215-381-00	s	METAL 22 1% 1/6W
R82	1-215-431-00	s	METAL 2.7k 1% 1/6W
R83	1-215-437-00	s	METAL 4.7k 1% 1/6W
R84	1-215-381-00	s	METAL 22 1% 1/6W
R85	1-215-381-00	s	METAL 22 1% 1/6W
R87	1-215-457-00	s	METAL 33k 1% 1/6W
R89	1-215-433-00	s	METAL 3.3k 1% 1/6W
R91	1-215-458-00	s	METAL 36k 1% 1/6W
R93	1-215-409-00	s	METAL 330 1% 1/6W
R94	1-215-409-00	s	METAL 330 1% 1/6W
R95	1-215-399-00	s	METAL 120 1% 1/6W

NOTE : For the parts marked # in the parts list, refer to "Section 23 Changed Parts".

(MOA-05 BOARD/BOARD NO. 1-639-121-13(DVR-2000/2100))

Ref. No. or Q'ty	Part No.	SP	Description
R96	1-215-399-00	s	METAL 120 1% 1/6W
R97	1-215-399-00	s	METAL 120 1% 1/6W
R98	1-215-399-00	s	METAL 120 1% 1/6W
R99	1-215-399-00	s	METAL 120 1% 1/6W
R100	1-215-399-00	s	METAL 120 1% 1/6W
R101	1-215-399-00	s	METAL 120 1% 1/6W
R102	1-215-399-00	s	METAL 120 1% 1/6W
R103	1-215-399-00	s	METAL 120 1% 1/6W
R104	1-215-399-00	s	METAL 120 1% 1/6W
R105	1-215-399-00	s	METAL 120 1% 1/6W
R106	1-215-399-00	s	METAL 120 1% 1/6W
R107	1-215-381-00	s	METAL 22 1% 1/6W
R108	1-215-381-00	s	METAL 22 1% 1/6W
R109	1-215-381-00	s	METAL 22 1% 1/6W
R110	1-215-381-00	s	METAL 22 1% 1/6W
R126	1-215-390-00	s	METAL 51 1% 1/6W
R127	1-215-373-31	s	METAL 10 1% 1/6W
R128	1-215-453-00	s	METAL 22k 1% 1/6W
R129	1-215-437-00	s	METAL 4.7k 1% 1/6W
R130	1-215-437-00	s	METAL 4.7k 1% 1/6W
R131	1-215-437-00	s	METAL 4.7k 1% 1/6W
R132	1-215-461-00	s	METAL 47k 1% 1/6W
R133	1-215-493-00	s	METAL 1M 1% 1/6W
R134	1-215-493-00	s	METAL 1M 1% 1/6W
R135	1-215-421-00	s	METAL 1k 1% 1/6W
R148	1-215-420-00	s	METAL 910 1% 1/6W
#R149	1-215-422-00	s	METAL 1.1k 1% 1/6W
R150	1-215-390-00	s	METAL 51 1% 1/6W
R151	1-215-381-00	s	METAL 22 1% 1/6W
R152	1-215-437-00	s	METAL 4.7k 1% 1/6W
R153	1-215-381-00	s	METAL 22 1% 1/6W
R157	1-215-420-00	s	METAL 910 1% 1/6W
#R158	1-215-422-00	s	METAL 1.1k 1% 1/6W
R159	1-215-390-00	s	METAL 51 1% 1/6W
R160	1-215-429-00	s	METAL 2.2k 1% 1/6W
R164	1-215-437-00	s	METAL 4.7k 1% 1/6W
R165	1-215-390-00	s	METAL 51 1% 1/6W
R171	1-215-390-00	s	METAL 51 1% 1/6W
R172	1-215-453-00	s	METAL 22k 1% 1/6W
R173	1-215-381-00	s	METAL 22 1% 1/6W
R174	1-215-381-00	s	METAL 22 1% 1/6W
R175	1-215-433-00	s	METAL 3.3k 1% 1/6W
R178	1-215-444-00	s	METAL 9.1k 1% 1/6W
R181	1-215-447-00	s	METAL 12k 1% 1/6W
R182	1-215-409-00	s	METAL 330 1% 1/6W
R183	1-215-409-00	s	METAL 330 1% 1/6W
R184	1-215-399-00	s	METAL 120 1% 1/6W
R185	1-215-399-00	s	METAL 120 1% 1/6W
R186	1-215-399-00	s	METAL 120 1% 1/6W
R187	1-215-399-00	s	METAL 120 1% 1/6W
R188	1-215-399-00	s	METAL 120 1% 1/6W
R189	1-215-399-00	s	METAL 120 1% 1/6W
R190	1-215-399-00	s	METAL 120 1% 1/6W
R191	1-215-399-00	s	METAL 120 1% 1/6W
R192	1-215-399-00	s	METAL 120 1% 1/6W
R193	1-215-399-00	s	METAL 120 1% 1/6W
R194	1-215-399-00	s	METAL 120 1% 1/6W
R195	1-215-399-00	s	METAL 120 1% 1/6W
R196	1-215-381-00	s	METAL 22 1% 1/6W

NOTE : Please see page 22-42 for the parts that are not listed in the parts list.

(MOA-05 BOARD/BOARD NO. 1-639-121-13(DVR-2000/2100))

Ref. No. or Q'ty	Part No.	SP	Description
R197	1-215-381-00	s	METAL 22 1% 1/6W
R198	1-215-381-00	s	METAL 22 1% 1/6W
R199	1-215-381-00	s	METAL 22 1% 1/6W
R200	1-215-381-00	s	METAL 22 1% 1/6W
R201	1-215-381-00	s	METAL 22 1% 1/6W
R202	1-215-381-00	s	METAL 22 1% 1/6W
R203	1-215-381-00	s	METAL 22 1% 1/6W
R204	1-215-453-00	s	METAL 22k 1% 1/6W
R205	1-215-433-00	s	METAL 3.3k 1% 1/6W
R208	1-215-444-00	s	METAL 9.1k 1% 1/6W
R211	1-215-447-00	s	METAL 12k 1% 1/6W
R212	1-215-381-00	s	METAL 22 1% 1/6W
R213	1-215-381-00	s	METAL 22 1% 1/6W
R214	1-215-409-00	s	METAL 330 1% 1/6W
R215	1-215-409-00	s	METAL 330 1% 1/6W
R216	1-215-399-00	s	METAL 120 1% 1/6W
R217	1-215-399-00	s	METAL 120 1% 1/6W
R218	1-215-399-00	s	METAL 120 1% 1/6W
R219	1-215-399-00	s	METAL 120 1% 1/6W
R220	1-215-399-00	s	METAL 120 1% 1/6W
R221	1-215-399-00	s	METAL 120 1% 1/6W
R222	1-215-399-00	s	METAL 120 1% 1/6W
R223	1-215-399-00	s	METAL 120 1% 1/6W
R224	1-215-399-00	s	METAL 120 1% 1/6W
R225	1-215-399-00	s	METAL 120 1% 1/6W
R226	1-215-399-00	s	METAL 120 1% 1/6W
R227	1-215-399-00	s	METAL 120 1% 1/6W
R228	1-215-445-00	s	METAL 10k 1% 1/6W
R229	1-215-445-00	s	METAL 10k 1% 1/6W
R230	1-215-453-00	s	METAL 22k 1% 1/6W
R232	1-215-404-00	s	METAL 200 1% 1/6W
R233	1-215-453-00	s	METAL 22k 1% 1/6W
R234	1-215-437-00	s	METAL 4.7k 1% 1/6W
R235	1-215-445-00	s	METAL 10k 1% 1/6W
R242	1-215-461-00	s	METAL 47k 1% 1/6W
R243	1-215-381-00	s	METAL 22 1% 1/6W
R244	1-215-381-00	s	METAL 22 1% 1/6W
R245	1-215-381-00	s	METAL 22 1% 1/6W
R246	1-215-381-00	s	METAL 22 1% 1/6W
R249	1-215-407-00	s	METAL 270 1% 1/6W
R250	1-215-407-00	s	METAL 270 1% 1/6W
R251	1-215-459-00	s	METAL 39k 1% 1/6W
R252	1-215-445-00	s	METAL 10k 1% 1/6W
R253	1-215-397-00	s	METAL 100 1% 1/6W
R254	1-215-397-00	s	METAL 100 1% 1/6W
R255	1-215-397-00	s	METAL 100 1% 1/6W
R256	1-215-397-00	s	METAL 100 1% 1/6W
R257	1-215-397-00	s	METAL 100 1% 1/6W
R258	1-215-397-00	s	METAL 100 1% 1/6W
R259	1-215-424-00	s	METAL 1.3k 1% 1/6W
R260	1-215-441-00	s	METAL 6.8k 1% 1/6W
R261	1-215-404-00	s	METAL 200 1% 1/6W
R262	1-215-433-00	s	METAL 3.3k 1% 1/6W
R263	1-215-399-00	s	METAL 120 1% 1/6W
R264	1-215-421-00	s	METAL 1k 1% 1/6W
R265	1-215-421-00	s	METAL 1k 1% 1/6W
R266	1-215-433-00	s	METAL 3.3k 1% 1/6W
R267	1-215-453-00	s	METAL 22k 1% 1/6W
R268	1-215-467-00	s	METAL 82k 1% 1/6W

NOTE : For the parts marked # in the parts list, refer to "Section 23 Changed Parts".

(MOA-05 BOARD/BOARD NO. 1-639-121-13(DVR-2000/2100))

Ref. No. or Q'ty	Part No.	SP	Description
R269	1-215-493-00	s	METAL 1M 1% 1/6W
R270	1-215-424-00	s	METAL 1.3k 1% 1/6W
R271	1-215-441-00	s	METAL 6.8k 1% 1/6W
R272	1-215-404-00	s	METAL 200 1% 1/6W
R273	1-215-433-00	s	METAL 3.3k 1% 1/6W
R274	1-215-399-00	s	METAL 120 1% 1/6W
R275	1-215-421-00	s	METAL 1k 1% 1/6W
R276	1-215-421-00	s	METAL 1k 1% 1/6W
R277	1-215-433-00	s	METAL 3.3k 1% 1/6W
R289	1-215-453-00	s	METAL 22k 1% 1/6W
R290	1-215-467-00	s	METAL 82k 1% 1/6W
R291	1-215-493-00	s	METAL 1M 1% 1/6W
#R292	1-215-425-00	s	METAL 1.5k 1% 1/6W
R293	1-215-441-00	s	METAL 6.8k 1% 1/6W
#R294	1-215-411-00	s	METAL 390 1% 1/6W
R295	1-215-433-00	s	METAL 3.3k 1% 1/6W
R296	1-215-399-00	s	METAL 120 1% 1/6W
R297	1-215-421-00	s	METAL 1k 1% 1/6W
R298	1-215-421-00	s	METAL 1k 1% 1/6W
R299	1-215-433-00	s	METAL 3.3k 1% 1/6W
R300	1-215-453-00	s	METAL 22k 1% 1/6W
R301	1-215-467-00	s	METAL 82k 1% 1/6W
R302	1-215-493-00	s	METAL 1M 1% 1/6W
#R303	1-215-425-00	s	METAL 1.5k 1% 1/6W
R304	1-215-441-00	s	METAL 6.8k 1% 1/6W
#R305	1-215-411-00	s	METAL 390 1% 1/6W
R306	1-215-433-00	s	METAL 3.3k 1% 1/6W
R307	1-215-399-00	s	METAL 120 1% 1/6W
R308	1-215-421-00	s	METAL 1k 1% 1/6W
R309	1-215-421-00	s	METAL 1k 1% 1/6W
R310	1-215-433-00	s	METAL 3.3k 1% 1/6W
R311	1-215-453-00	s	METAL 22k 1% 1/6W
R312	1-215-467-00	s	METAL 82k 1% 1/6W
R313	1-215-493-00	s	METAL 1M 1% 1/6W
R314	1-215-461-00	s	METAL 47k 1% 1/6W
R315	1-215-397-00	s	METAL 100 1% 1/6W
R316	1-215-420-00	s	METAL 910 1% 1/6W
R317	1-215-429-00	s	METAL 2.2k 1% 1/6W
R318	1-215-441-00	s	METAL 6.8k 1% 1/6W
R319	1-215-404-00	s	METAL 200 1% 1/6W
R320	1-215-441-00	s	METAL 6.8k 1% 1/6W
R321	1-215-404-00	s	METAL 200 1% 1/6W
R322	1-215-441-00	s	METAL 6.8k 1% 1/6W
#R323	1-215-411-00	s	METAL 390 1% 1/6W
R324	1-215-441-00	s	METAL 6.8k 1% 1/6W
#R325	1-215-411-00	s	METAL 390 1% 1/6W
R326	1-215-397-00	s	METAL 100 1% 1/6W
R327	1-215-397-00	s	METAL 100 1% 1/6W
R328	1-215-412-00	s	METAL 430 1% 1/6W
R329	1-215-412-00	s	METAL 430 1% 1/6W
R330	1-215-412-00	s	METAL 430 1% 1/6W
R331	1-215-381-00	s	METAL 22 1% 1/6W
R332	1-215-381-00	s	METAL 22 1% 1/6W
R333	1-215-381-00	s	METAL 22 1% 1/6W
R334	1-215-381-00	s	METAL 22 1% 1/6W
R339	1-215-443-00	s	METAL 8.2k 1% 1/6W
R340	1-215-421-00	s	METAL 1k 1% 1/6W
#R341	1-215-445-00	s	METAL 10k 1% 1/6W
R342	1-215-421-00	s	METAL 1k 1% 1/6W

NOTE : Please see page 22-42 for the parts that are not listed in the parts list.

(MOA-05 BOARD/BOARD NO. 1-639-121-13(DVR-2000/2100))

Ref. No. or Q'ty	Part No.	SP	Description
#R343	1-215-445-00	s	METAL 10k 1% 1/6W
R344	1-215-421-00	s	METAL 1k 1% 1/6W
R400	1-215-445-00	s	METAL 10k 1% 1/6W
R401	1-215-461-00	s	METAL 47k 1% 1/6W
R402	1-215-461-00	s	METAL 47k 1% 1/6W
R403	1-215-469-00	s	METAL 100k 1% 1/6W
R404	1-215-469-00	s	METAL 100k 1% 1/6W
R500	1-216-089-00	s	METAL, CHIP 47k 5% 1/10W
R501	1-216-089-00	s	METAL, CHIP 47k 5% 1/10W
R502	1-216-089-00	s	METAL, CHIP 47k 5% 1/10W
R503	1-216-089-00	s	METAL, CHIP 47k 5% 1/10W
R504	1-216-089-00	s	METAL, CHIP 47k 5% 1/10W
R505	1-216-089-00	s	METAL, CHIP 47k 5% 1/10W
R506	1-216-089-00	s	METAL, CHIP 47k 5% 1/10W
R507	1-216-089-00	s	METAL, CHIP 47k 5% 1/10W
R508	1-216-089-00	s	METAL, CHIP 47k 5% 1/10W
R509	1-216-089-00	s	METAL, CHIP 47k 5% 1/10W
R510	1-216-089-00	s	METAL, CHIP 47k 5% 1/10W
R511	1-216-089-00	s	METAL, CHIP 47k 5% 1/10W
R512	1-216-089-00	s	METAL, CHIP 47k 5% 1/10W
R513	1-216-089-00	s	METAL, CHIP 47k 5% 1/10W
R514	1-216-089-00	s	METAL, CHIP 47k 5% 1/10W
R515	1-216-089-00	s	METAL, CHIP 47k 5% 1/10W
R516	1-216-089-00	s	METAL, CHIP 47k 5% 1/10W
R517	1-216-089-00	s	METAL, CHIP 47k 5% 1/10W
R518	1-216-089-00	s	METAL, CHIP 47k 5% 1/10W
R519	1-216-089-00	s	METAL, CHIP 47k 5% 1/10W
R520	1-216-089-00	s	METAL, CHIP 47k 5% 1/10W
R521	1-216-089-00	s	METAL, CHIP 47k 5% 1/10W
R522	1-216-089-00	s	METAL, CHIP 47k 5% 1/10W
R523	1-216-089-00	s	METAL, CHIP 47k 5% 1/10W
R524	1-216-089-00	s	METAL, CHIP 47k 5% 1/10W
R525	1-216-089-00	s	METAL, CHIP 47k 5% 1/10W
R526	1-216-089-00	s	METAL, CHIP 47k 5% 1/10W
R527	1-216-089-00	s	METAL, CHIP 47k 5% 1/10W
R528	1-216-089-00	s	METAL, CHIP 47k 5% 1/10W
R529	1-216-089-00	s	METAL, CHIP 47k 5% 1/10W
R530	1-216-089-00	s	METAL, CHIP 47k 5% 1/10W
R531	1-216-089-00	s	METAL, CHIP 47k 5% 1/10W
R535	1-216-089-00	s	METAL, CHIP 47k 5% 1/10W
R536	1-216-089-00	s	METAL, CHIP 47k 5% 1/10W
R537	1-216-089-00	s	METAL, CHIP 47k 5% 1/10W
R538	1-216-089-00	s	METAL, CHIP 47k 5% 1/10W
R539	1-216-089-00	s	METAL, CHIP 47k 5% 1/10W
R540	1-216-089-00	s	METAL, CHIP 47k 5% 1/10W
R541	1-216-089-00	s	METAL, CHIP 47k 5% 1/10W
R542	1-216-089-00	s	METAL, CHIP 47k 5% 1/10W
R543	1-216-089-00	s	METAL, CHIP 47k 5% 1/10W
R544	1-216-089-00	s	METAL, CHIP 47k 5% 1/10W
R545	1-216-089-00	s	METAL, CHIP 47k 5% 1/10W
R546	1-216-089-00	s	METAL, CHIP 47k 5% 1/10W
R547	1-216-089-00	s	METAL, CHIP 47k 5% 1/10W
R550	1-215-425-00	s	METAL 1.5k 1% 1/6W
R551	1-215-425-00	s	METAL 1.5k 1% 1/6W
R552	1-215-425-00	s	METAL 1.5k 1% 1/6W
R553	1-215-425-00	s	METAL 1.5k 1% 1/6W
R554	1-216-089-00	s	METAL, CHIP 47k 5% 1/10W
RV1	1-237-520-21	s	RES, ADJ METAL 50k

NOTE : For the parts marked # in the parts list, refer to "Section 23 Changed Parts".

(MOA-05 BOARD/BOARD NO. 1-639-121-13(DVR-2000/2100))

Ref. No. or Q'ty	Part No.	SP	Description
RV2	1-237-519-21	s	RES, ADJ METAL 20k
RV6	1-237-517-21	s	RES, ADJ METAL 5k
RV8	1-237-519-21	s	RES, ADJ METAL 20k
RV9	1-237-519-21	s	RES, ADJ METAL 20k
RV11	1-237-519-21	s	RES, ADJ METAL 20k
RV15	1-237-519-21	s	RES, ADJ METAL 20k
RV17	1-237-519-21	s	RES, ADJ METAL 20k
RV19	1-237-519-21	s	RES, ADJ METAL 20k
RV21	1-237-519-21	s	RES, ADJ METAL 20k
RY1	1-515-691-11	s	RELAY
RY2	1-515-683-11	s	RELAY
RY3	1-515-683-11	s	RELAY
RY4	1-515-683-11	s	RELAY
RY5	1-515-683-11	s	RELAY

MT-47 BOARD(DVR-2000/2100)

Ref. No. or Q'ty	Part No.	SP	Description

Two MT-47 boards are used in DVR-2100.
One board has the following part.

1pc	1-624-886-11	o	PRINTED CIRCUIT BOARD, MT-47
CN376M	1-506-631-11	o	CONNECTOR, PS 4P, MALE

NOTE : Please see page 22-42 for the parts that are not listed in the parts list.

MY-46 BOARD(DVR-2000/2100)

Ref. No. or Q'ty	Part No.	SP	Description
1pc	A-6021-014-A	o	MOUNTED CIRCUIT BOARD, MY-46
4pcs	4-914-895-01	s	FOOT, RUBBER
2pcs	7-622-205-05	s	NUT M2 TYPE2
2pcs	7-628-253-30	s	SCREW, +PS 2x8
BT1	1-528-175-11	s	BATTERY, Ni-Cd
BT2	1-528-175-11	s	BATTERY, Ni-Cd
BT3	1-528-175-11	s	BATTERY, Ni-Cd
C1	1-124-234-00	s	ELECT 22uF 20% 16V
C2	1-124-234-00	s	ELECT 22uF 20% 16V
C3	1-107-600-11	s	MICA 30pF 5% 500V
C4	1-131-367-00	s	TANTALUM 22uF 10% 20V
C5	1-124-584-00	s	ELECT 100uF 20% 10V
#C6	1-164-097-11	s	CERAMIC 0.022uF 50V
#C7	1-164-097-11	s	CERAMIC 0.022uF 50V
#C8	1-164-097-11	s	CERAMIC 0.022uF 50V
#C9	1-164-097-11	s	CERAMIC 0.022uF 50V
#C10	1-164-097-11	s	CERAMIC 0.022uF 50V
C11	1-107-603-11	s	MICA 39pF 5% 500V
CN1	1-568-058-11	o	CONNECTOR, TX 80P, MALE
#D1	8-719-982-04	s	DIODE ERB81-004
#D2	8-719-982-04	s	DIODE ERB81-004
#D3	8-719-982-04	s	DIODE ERB81-004
IC1	8-759-921-34	s	IC SN74HC245N
IC2	8-759-916-71	s	IC SN74HC244N
IC3	8-759-916-71	s	IC SN74HC244N
IC4	8-759-916-71	s	IC SN74HC244N
IC5	8-759-916-71	s	IC SN74HC244N
IC6	8-759-921-34	s	IC SN74HC245N
IC7	8-759-920-39	s	IC RP5C15
IC8	8-759-369-72	s	IC S-22S122110, NOVRAM
IC9	8-759-369-72	s	IC S-22S122110, NOVRAM
#IC10	8-749-011-87	s	IC M48Z30Y-100PM1, NOVRAM
IC11	8-759-982-65	s	IC ICL7665SCPA
JS1	1-563-859-11	s	PLUG, SHORTING
JW1	1-566-388-11	s	CONNECTOR 8P, MALE
JW2	1-566-388-11	s	CONNECTOR 8P, MALE
L1	1-421-329-00	s	COIL, CHOKE
R1	1-215-445-00	s	METAL 10k 1% 1/6W
R2	1-215-469-00	s	METAL 100k 1% 1/6W
R3	1-215-373-31	s	METAL 10 1% 1/6W
R4	1-215-473-00	s	METAL 150k 1% 1/6W
R5	1-215-451-00	s	METAL 18k 1% 1/6W
R6	1-215-445-00	s	METAL 10k 1% 1/6W
R7	1-215-421-00	s	METAL 1k 1% 1/6W
R8	1-215-381-00	s	METAL 22 1% 1/6W
R9	1-215-445-00	s	METAL 10k 1% 1/6W
R10	1-215-445-00	s	METAL 10k 1% 1/6W
RB1	1-231-411-00	s	RESISTOR BLOCK 100kx8
RB2	1-235-005-00	s	RESISTOR BLOCK 47kx8
RB3	1-235-005-00	s	RESISTOR BLOCK 47kx8
RB4	1-235-005-00	s	RESISTOR BLOCK 47kx8
RB5	1-235-005-00	s	RESISTOR BLOCK 47kx8
RB6	1-231-411-00	s	RESISTOR BLOCK 100kx8

NOTE : For the parts marked # in the parts list, refer to "Section 23 Changed Parts".

(MY-46 BOARD(DVR-2000/2100))

Ref. No. or Q'ty	Part No.	SP	Description
X1	1-567-098-00	s	CRYSTAL 32.76800MHz

NOTE : Please see page 22-42 for the parts that are not listed in the parts list.

PA-142 BOARD/BOARD NO. 1-639-156-11(DVR-2000/2100)

BOARD NO. 1-639-156-11
DVR-2100(J) : S/N 10001 thru 10199
DVR-2100(UC): S/N 10001 thru 10199
DVR-2100(EK): S/N 10001 thru 10199

Ref. No. or Q'ty	Part No.	SP	Description
#1pc	A-6013-125-A	o	MOUNTED CIRCUIT BOARD, PA-142
C1	1-135-160-21	s	TANTALUM 15uF 10% 16V
C3	1-163-257-11	s	CERAMIC, CHIP 180pF 5% 50V
C6	1-163-235-11	s	CERAMIC, CHIP 22pF 5% 50V
C7	1-135-160-21	s	TANTALUM 15uF 10% 16V
C8	1-163-235-11	s	CERAMIC, CHIP 22pF 5% 50V
C9	1-135-160-21	s	TANTALUM 15uF 10% 16V
C11	1-163-235-11	s	CERAMIC, CHIP 22pF 5% 50V
C12	1-135-160-21	s	TANTALUM 15uF 10% 16V
C13	1-135-160-21	s	TANTALUM 15uF 10% 16V
C14	1-135-160-21	s	TANTALUM 15uF 10% 16V
C15	1-135-160-21	s	TANTALUM 15uF 10% 16V
C17	1-130-474-00	s	MYLAR 0.0018uF 5% 50V
C18	1-124-584-00	s	ELECT 100uF 20% 10V
CN749	1-506-642-11	o	CONNECTOR, PS 26P, MALE
CN750	1-506-468-11	o	CONNECTOR, 3P, MALE
CN751	1-506-468-11	o	CONNECTOR, 3P, MALE
CN752	1-506-468-11	o	CONNECTOR, 3P, MALE
CN753	1-506-468-11	o	CONNECTOR, 3P, MALE
D1	8-719-104-34	s	DIODE 1S2835
D2	8-719-104-34	s	DIODE 1S2835
D3	8-719-104-34	s	DIODE 1S2835
D4	8-719-104-34	s	DIODE 1S2835
IC1	8-759-981-58	s	IC RC2043MD
IC2	8-759-981-58	s	IC RC2043MD
Q1	8-729-900-98	s	TRANSISTOR DTC143TK
Q2	8-729-900-98	s	TRANSISTOR DTC143TK
Q3	8-729-900-98	s	TRANSISTOR DTC143TK
Q4	8-729-900-98	s	TRANSISTOR DTC143TK
RY1	1-515-691-11	s	RELAY
RY2	1-515-691-11	s	RELAY
RY3	1-515-691-11	s	RELAY
RY4	1-515-691-11	s	RELAY

NOTE : For the parts marked # in the parts list, refer to "Section 23 Changed Parts".

PA-142 BOARD/BOARD NO. 1-639-156-12/-13(DVR-2000/2100)

Ref. No. or Q'ty	Part No.	SP	Description
BOARD NO. 1-639-156-12/-13			
DVR-2000(J) : S/N 10001 and higher			
DVR-2000(UC): S/N 10001 and higher			
DVR-2000(EK): S/N 10001 and higher			
DVR-2100(J) : S/N 10201 and higher			
DVR-2100(UC): S/N 10201 and higher			
DVR-2100(EK): S/N 10201 and higher			
#1pc	A-6013-125-B	o	MOUNTED CIRCUIT BOARD, PA-142
C1	1-135-202-21	s	TANTALUM, CHIP 22uF 10% 4V
C3	1-163-257-11	s	CERAMIC, CHIP 180pF 5% 50V
C4	1-135-202-21	s	TANTALUM, CHIP 22uF 10% 4V
C6	1-163-235-11	s	CERAMIC, CHIP 22pF 5% 50V
C7	1-135-202-21	s	TANTALUM, CHIP 22uF 10% 4V
C8	1-163-235-11	s	CERAMIC, CHIP 22pF 5% 50V
C9	1-135-202-21	s	TANTALUM, CHIP 22uF 10% 4V
C11	1-163-235-11	s	CERAMIC, CHIP 22pF 5% 50V
C12	1-135-160-21	s	TANTALUM 15uF 20% 16V
C13	1-135-160-21	s	TANTALUM 15uF 20% 16V
C14	1-135-160-21	s	TANTALUM 15uF 20% 16V
C15	1-135-160-21	s	TANTALUM 15uF 20% 16V
C17	1-163-012-00	s	CERAMIC CHIP 1800pF 10% 50V
C18	1-126-924-11	s	ELECT 330uF 20% 6.3V
CN749	1-506-642-11	o	CONNECTOR, PS 26P, MALE
CN750	1-506-468-11	o	CONNECTOR 3P, MALE
CN751	1-506-468-11	o	CONNECTOR 3P, MALE
CN752	1-506-468-11	o	CONNECTOR 3P, MALE
CN753	1-506-468-11	o	CONNECTOR 3P, MALE
D1	8-719-104-34	s	DIODE 1S2835
D2	8-719-104-34	s	DIODE 1S2835
D3	8-719-104-34	s	DIODE 1S2835
IC1	8-759-981-58	s	IC RC2043MD
IC2	8-759-981-58	s	IC RC2043MD
Q1	8-729-900-98	s	TRANSISTOR DTC143TK
Q2	8-729-900-98	s	TRANSISTOR DTC143TK
Q3	8-729-900-98	s	TRANSISTOR DTC143TK
RY1	1-515-691-11	s	RELAY
RY2	1-515-691-11	s	RELAY
RY3	1-515-691-11	s	RELAY

PC-42 BOARD(DVR-2000/2100)

Ref. No. or Q'ty	Part No.	SP	Description
Seven PC-42 boards are used in DVR-2100. One board has the following parts.			
1pc	1-624-889-11	o	PRINTED CIRCUIT BOARD, PC-42
1pc	1-506-468-11	o	CONNECTOR 3P, MALE
1pc	8-719-918-74	s	PHOTOINTERRUPTER GP-1S04

NOTE : Please see page 22-42 for the parts that are not listed in the parts list.

PC-50 BOARD(DVR-2000/2100)

Ref. No. or Q'ty	Part No.	SP	Description
CN10	1-562-885-11	o	CONNECTOR, FPC 10P, FEMALE
CN390	1-506-488-11	o	CONNECTOR 9P, MALE

PC-51 BOARD(DVR-2000/2100)

Ref. No. or Q'ty	Part No.	SP	Description
CN20	1-562-885-11	o	CONNECTOR, FPC 10P, FEMALE

PC-52 BOARD(DVR-2000/2100)

Ref. No. or Q'ty	Part No.	SP	Description
CN30	1-562-884-11	o	CONNECTOR, FPC 4P, FEMALE
CN319	1-506-484-11	o	CONNECTOR 5P, MALE

PC-53 BOARD(DVR-2000/2100)

Ref. No. or Q'ty	Part No.	SP	Description
CN40	1-562-884-11	o	CONNECTOR, FPC 4P, FEMALE
PH40	8-719-915-46	o	PHOTOINTERRUPTER GP-1S05
PH41	8-719-915-46	o	PHOTOINTERRUPTER GP-1S05
R40	1-249-413-11	s	CARBON 470 5% 1/4W
R41	1-249-413-11	s	CARBON 470 5% 1/4W

PC-54 BOARD(DVR-2000/2100)

Ref. No. or Q'ty	Part No.	SP	Description
Two PC-54 boards are used in DVR-2100. One board has the following parts.			
PH1	8-719-915-46	s	PHOTOINTERRUPTER GP-1S05
R1	1-216-041-00	s	METAL, CHIP 470 5% 1/10W

NOTE : For the parts marked # in the parts list, refer to "Section 23 Changed Parts".

PC-55 BOARD(DVR-2000/2100)

Four PC-55 boards are used in DVR-2100.
One board has the following parts.

Ref. No. or Q'ty	Part No.	SP	Description
PH1	8-719-915-46	s	PHOTOINTERRUPTER GP-1S05
R1	1-216-041-00	s	METAL, CHIP 470 5% 1/10W

PC-60 BOARD(DVR-2000/2100)

Ref. No. or Q'ty	Part No.	SP	Description
CN316	1-506-483-21	o	CONNECTOR, 4P, MALE
D1	8-719-123-69	s	DIODE SE310
Q1	8-729-116-45	s	PHOTOTRANSISTOR PH110
RV1	1-228-471-11	s	RES, ADJ, CERMET 1k

PC-64 BOARD(DVR-2000/2100)

Two PC-64 boards are used in DVR-2100.
One board has the following parts.

Ref. No. or Q'ty	Part No.	SP	Description
CN1	1-506-483-21	o	CONNECTOR, 4P, MALE
D1	8-719-123-69	s	DIODE SE310
Q1	8-729-116-45	s	PHOTOTRANSISTOR PH110
RV1	1-228-471-11	s	RES, ADJ, CERMET 1k

NOTE : Please see page 22-42 for the parts that are not listed in the parts list.

PD-49 BOARD(DVR-2000/2100)

Ref. No. or Q'ty	Part No.	SP	Description
1pc	A-6023-072-A	o	MOUNTED CIRCUIT BOARD, PD-49
5pcs	7-682-647-09	s	SCREW,+PS 3X6
4pcs	7-682-947-01	s	SCREW, +PSW 3x6
5pcs	7-684-023-04	s	N 3, TYPE 2
C101	1-163-003-11	s	CERAMIC 330pF 10% 50V
C102	1-163-003-11	s	CERAMIC 330pF 10% 50V
C103	1-163-239-11	s	CERAMIC, CHIP 33pF 5% 50V
C104	1-164-004-11	s	CERAMIC, CHIP 0.1uF 10% 25V
C105	1-164-004-11	s	CERAMIC, CHIP 0.1uF 10% 25V
C106	1-161-900-11	s	CERAMIC 1uF 50V
C107	1-164-004-11	s	CERAMIC, CHIP 0.1uF 10% 25V
C113	1-163-239-11	s	CERAMIC, CHIP 33pF 5% 50V
C114	1-164-004-11	s	CERAMIC, CHIP 0.1uF 10% 25V
C115	1-164-004-11	s	CERAMIC, CHIP 0.1uF 10% 25V
C116	1-161-900-11	s	CERAMIC 1uF 50V
C117	1-164-004-11	s	CERAMIC, CHIP 0.1uF 10% 25V
C121	1-124-600-00	s	ELECT 270uF 20% 25V
C122	1-124-600-00	s	ELECT 270uF 20% 25V
C123	1-130-499-00	s	MYLAR 0.22uF 5% 50V
C124	1-124-600-00	s	ELECT 270uF 20% 25V
C125	1-124-600-00	s	ELECT 270uF 20% 25V
C126	1-130-499-00	s	MYLAR 0.22uF 5% 50V
C131	1-164-004-11	s	CERAMIC, CHIP 0.1uF 10% 25V
C132	1-164-004-11	s	CERAMIC, CHIP 0.1uF 10% 25V
C133	1-164-004-11	s	CERAMIC, CHIP 0.1uF 10% 25V
C134	1-164-004-11	s	CERAMIC, CHIP 0.1uF 10% 25V
C201	1-164-004-11	s	CERAMIC, CHIP 0.1uF 10% 25V
C202	1-161-900-11	s	CERAMIC 1uF 50V
C203	1-164-004-11	s	CERAMIC, CHIP 0.1uF 10% 25V
C204	1-164-004-11	s	CERAMIC, CHIP 0.1uF 10% 25V
C205	1-126-376-11	s	ELECT 470uF 20% 25V
CN374	1-506-633-11	o	CONNECTOR, PS 8P
CN378	1-506-469-11	s	CONNECTOR 4P, MALE
CN379	1-560-300-00	o	CONNECTOR, IL 3P, MALE
CN388	1-506-468-11	o	CONNECTOR 3P, MALE
#D101	8-719-820-61	s	DIODE 1SS294
#D102	8-719-820-61	s	DIODE 1SS294
#D103	8-719-820-61	s	DIODE 1SS294
#D111	8-719-820-61	s	DIODE 1SS294
#D112	8-719-820-61	s	DIODE 1SS294
#D113	8-719-820-61	s	DIODE 1SS294
D151	8-719-800-76	s	DIODE 1SS226
#D201	8-719-105-32	s	DIODE RD2.7MB2
IC101	8-759-934-21	s	IC SN74ALS112ANS
IC102	8-759-925-90	s	IC SN74HC74NS
IC103	8-759-991-41	s	IC LM78L05ACZ
IC201	8-759-908-15	s	IC TL431CLP
JP101	1-566-388-11	s	CONNECTOR 8P, MALE
#JP102	1-566-388-11	s	CONNECTOR 8P, MALE
#JS101	1-563-859-11	s	PLUG, SHORTING
L201	1-421-459-00	s	COIL, CHOKE
#Q101	8-729-140-47	s	TRANSISTOR 2SC3735-B34
#Q102	8-729-140-47	s	TRANSISTOR 2SC3735-B34
#Q103	8-729-322-23	s	TRANSISTOR 2SJ120S
#Q104	8-729-322-20	s	TRANSISTOR 2SK416S
Q105	8-729-304-35	s	TRANSISTOR 2SJ122

NOTE : For the parts marked # in the parts list, refer to "Section 23 Changed Parts".

(PD-49 BOARD(DVR-2000/2100))

Ref. No. or Q'ty	Part No.	SP	Description
Q106	8-729-304-36	s	TRANSISTOR 2SK428
#Q111	8-729-140-47	s	TRANSISTOR 2SC3735-B34
#Q112	8-729-140-47	s	TRANSISTOR 2SC3735-B34
#Q113	8-729-322-23	s	TRANSISTOR 2SJ120S
#Q114	8-729-322-20	s	TRANSISTOR 2SK416S
Q115	8-729-304-35	s	TRANSISTOR 2SJ122
Q116	8-729-304-36	s	TRANSISTOR 2SK428
Q201	8-729-377-13	s	TRANSISTOR 2SA771-Y
#Q202	8-729-120-28	s	TRANSISTOR 2SC1623-L5L6
R211	1-249-413-11	s	CARBON 470 5% 1/4W

PE-18 BOARD(DVR-2000/2100)

Ref. No. or Q'ty	Part No.	SP	Description
1pc	1-620-916-11	o	PRINTED CIRCUIT BOARD, PE-18
CN206	1-506-481-11	o	CONNECTOR 2P, MALE
#D1	8-719-027-67	s	DIODE GL8KG21T

NOTE : Please see page 22-42 for the parts that are not listed in the parts list.

PS-219 BOARD(DVR-2000/2100/BKDV-2010)

Ref. No. or Q'ty	Part No.	SP	Description
1pc	A-6017-185-A	o	MOUNTED CIRCUIT BOARD, PS-219
2pcs	2-832-007-00	s	BUSHING (K), INSULATING
2pcs	3-660-978-00	s	SHEET, HEAT RESISTING
2pcs	7-621-759-75	s	SCREW, +PSW 2.6x10
2pcs	7-622-207-05	s	N 2.6, TYPE 2
C1	1-161-055-00	s	CERAMIC 0.022uF 10% 50V
C2	1-126-144-11	s	ELECT 330uF 20% 35V
C3	1-161-055-00	s	CERAMIC 0.022uF 10% 50V
C4	1-161-055-00	s	CERAMIC 0.022uF 10% 50V
C5	1-162-814-11	s	CERAMIC 0.47uF 10% 50V
C6	1-130-487-00	s	MYLAR 0.022uF 5% 50V
C7	1-130-487-00	s	MYLAR 0.022uF 5% 50V
C8	1-131-347-00	s	TANTALUM 1uF 10% 35V
C9	1-161-485-00	s	CERAMIC 0.1uF 50V
C10	1-126-376-11	s	ELECT 470uF 20% 25V
C11	1-162-814-11	s	CERAMIC 0.47uF 10% 50V
C12	1-124-559-51	s	ELECT 1000uF 20% 10V
C13	1-130-487-00	s	MYLAR 0.022uF 5% 50V
C14	1-131-347-00	s	TANTALUM 1uF 10% 35V
C15	1-130-487-00	s	MYLAR 0.022uF 5% 50V
C16	1-124-489-11	s	ELECT 150uF 20% 25V
C17	1-161-055-00	s	CERAMIC 0.022uF 10% 50V
C18	1-130-475-00	s	MYLAR 0.0022uF 5% 50V
C19	1-161-485-00	s	CERAMIC 0.1uF 50V
C20	1-161-485-00	s	CERAMIC 0.1uF 50V
C21	1-161-485-00	s	CERAMIC 0.1uF 50V
C22	1-161-485-00	s	CERAMIC 0.1uF 50V
CN509	1-580-562-11	o	CONNECTOR, LY 14P, MALE
CN510	1-563-769-11	s	CONNECTOR, 8P, FEMALE
CN518	1-506-483-21	o	CONNECTOR, 4P, MALE
#CP1	1-235-966-21	s	ENCAPSULATED COMPONENTS, CR
#CP2	1-235-966-21	s	ENCAPSULATED COMPONENTS, CR
D1	8-719-110-36	s	DIODE RD13E-B
D2	8-719-110-36	s	DIODE RD13E-B
D3	8-719-903-06	s	DIODE ERC84-009
D4	8-719-903-06	s	DIODE ERC84-009
#IC1	1-810-270-11	s	IC BP-026
IC2	8-759-937-59	s	IC MB3759
IC3	8-759-937-59	s	IC MB3759
#IC4	1-810-270-11	s	IC BP-026
L1	1-421-329-00	s	COIL, CHOKE
#L2	1-409-309-00	s	COIL, SN 72uH
L3	1-413-090-21	s	COIL, SN 110uH
L4	1-421-329-00	s	COIL, CHOKE
L5	1-421-329-00	s	COIL, CHOKE
L6	1-421-329-00	s	COIL, CHOKE
Q1	8-729-304-35	s	TRANSISTOR 2SJ122
Q2	8-729-304-35	s	TRANSISTOR 2SJ122
Q3	8-729-900-33	s	TRANSISTOR DTC144EF
Q4	8-729-900-33	s	TRANSISTOR DTC144EF
R1	1-249-416-11	s	CARBON 820 5% 1/4W
R2	1-249-416-11	s	CARBON 820 5% 1/4W
R3	1-247-868-11	s	CARBON 36k 5% 1/4W
R4	1-249-437-11	s	CARBON 47k 5% 1/4W
R5	1-249-426-11	s	CARBON 5.6k 5% 1/4W
R6	1-249-425-11	s	CARBON 4.7k 5% 1/4W

NOTE : For the parts marked # in the parts list, refer to "Section 23 Changed Parts".

(PS-219 BOARD(DVR-2000/2100/BKDV-2010))

Ref. No. or Q'ty	Part No.	SP	Description
R7	1-249-439-11	s	CARBON 68k 5% 1/4W
R8	1-249-437-11	s	CARBON 47k 5% 1/4W
R9	1-249-437-11	s	CARBON 47k 5% 1/4W
R10	1-249-409-11	s	CARBON 220 5% 1/4W
R11	1-249-409-11	s	CARBON 220 5% 1/4W
R12	1-247-881-00	s	CARBON 120k 5% 1/4W
R13	1-249-433-11	s	CARBON 22k 5% 1/4W
R14	1-249-414-11	s	CARBON 560 5% 1/4W
R15	1-247-903-00	s	CARBON 1M 5% 1/4W
R16	1-247-903-00	s	CARBON 1M 5% 1/4W
R17	1-249-433-11	s	CARBON 22k 5% 1/4W
R18	⚠ 1-207-612-00	s	WIREWOUND 0.1 10% 3W
R19	1-249-416-11	s	CARBON 820 5% 1/4W
R20	1-249-421-11	s	CARBON 2.2k 5% 1/4W
R21	1-247-903-00	s	CARBON 1M 5% 1/4W
R22	1-247-885-00	s	CARBON 180k 5% 1/4W
R23	1-247-889-00	s	CARBON 270k 5% 1/4W
R24	1-249-425-11	s	CARBON 4.7k 5% 1/4W
R25	1-249-428-11	s	CARBON 8.2k 5% 1/4W
R27	⚠ 1-207-612-00	s	WIREWOUND 0.1 10% 3W
R28	1-249-437-11	s	CARBON 47k 5% 1/4W
R29	1-249-435-11	s	CARBON 33k 5% 1/4W
R30	1-249-416-11	s	CARBON 820 5% 1/4W
R31	1-249-414-11	s	CARBON 560 5% 1/4W
R32	1-249-437-11	s	CARBON 47k 5% 1/4W
R33	1-249-425-11	s	CARBON 4.7k 5% 1/4W
R34	1-249-411-11	s	CARBON 330 5% 1/4W
R35	1-249-425-11	s	CARBON 4.7k 5% 1/4W
R36	1-249-409-11	s	CARBON 220 5% 1/4W
R37	1-249-425-11	s	CARBON 4.7k 5% 1/4W
RV1	1-237-518-21	s	RES, ADJ METAL 10k
RV2	1-237-517-21	s	RES, ADJ METAL 5k
RV3	1-237-518-21	s	RES, ADJ METAL 10k
RV4	1-237-520-21	s	RES, ADJ METAL 50k

NOTE : Please see page 22-42 for the parts that are not listed in the parts list.

PS-256 BOARD(DVR-2000/2100)

Ref. No. or Q'ty	Part No.	SP	Description
#1pc	A-8313-074-A	o	MOUNTED CIRCUIT BOARD, PS-256
2pcs	1-533-037-XX	s	HOLDER, FUSE
1pc	1-560-298-00	o	CONTACT, IL, FEMALE AWG22-28
1pc	1-561-067-00	o	CONTACT, FEMALE AWG14-20
11pcs	2-832-007-00	s	BUSHING (K), INSULATING
1pc	3-170-555-01	s	SHEET, PS RADIATION
3pcs	3-660-978-11	s	SHEET, HEAT RESISTING
1pc	3-703-044-26	S	LABEL, CAUTION
3pcs	3-715-528-11	s	SHEET (F), RADIATION
1pc	3-735-939-01	o	SHEET (B-1), RADIATION, PS
1pc	3-735-940-01	o	SHEET (B-2), RADIATION, PS
1pc	3-735-942-01	o	SHEET (C-2), RADIATION, PS
1pc	3-735-944-01	o	SHEET (B-3), RADIATION, PS
1pc	4-314-320-00	o	HOLDER, WIRE
#1pc	4-607-492-01	o	HEAT SINK (M)
3pcs	4-870-221-00	o	SHAFT, FITTING, POWER SWITCH
1pc	4-873-829-02	o	HEAT SINK
2pcs	4-877-620-00	s	SUPPORT (P)
1pc	7-621-759-65	s	SCREW, +PSW 2.6x8
23pcs	7-621-759-85	s	SCREW, +PSW 2.6x12
14pcs	7-621-759-95	s	SCREW, +PSW 2.6x14
1pc	7-682-953-01	s	SCREW, +PSW 3x20
14pcs	7-682-948-01	s	SCREW, +PSW 3x8
1pc	7-685-147-21	s	SCREW, +P 3x10 TYPE2 SLIT
1pc	7-622-207-05	s	N 2.6, TYPE 2
#2pcs	7-682-548-09	s	SCREW, +B 3x8
1pc	9-911-839-XX	o	RUBBER (A)
C1	⚠ 1-137-524-11	s	FILM 0.22uF 20% 250V
C2	⚠ 1-137-524-11	s	FILM 0.22uF 20% 250V
#C3	1-113-916-11	s	CERAMIC 0.01uF 250V
#C4	1-113-916-11	s	CERAMIC 0.01uF 250V
#C5	1-113-916-11	s	CERAMIC 0.01uF 250V
#C6	1-113-916-11	s	CERAMIC 0.01uF 250V
C7	1-125-678-11	s	ELECT 1800uF 20% 200V
C8	1-125-678-11	s	ELECT 1800uF 20% 200V
C9	1-125-678-11	s	ELECT 1800uF 20% 200V
C10	1-125-678-11	s	ELECT 1800uF 20% 200V
C13	1-113-920-11	s	CERAMIC 0.0022uF 20% 250V
C14	1-124-666-11	s	ELECT 4.7uF 20% 250
C15	1-124-666-11	s	ELECT 4.7uF 20% 250
C16	1-113-920-11	s	CERAMIC 0.0022uF 20% 250V
C17	1-124-666-11	s	ELECT 4.7uF 20% 250
C18	1-124-666-11	s	ELECT 4.7uF 20% 250
C19	1-113-920-11	s	CERAMIC 0.0022uF 20% 250V
C20	1-124-534-11	s	ELECT 680uF 20% 16V
C22	1-124-666-11	s	ELECT 4.7uF 20% 250
C23	1-124-666-11	s	ELECT 4.7uF 20% 250
#C24	⚠ 1-113-915-51	s	CERAMIC 0.0033uF 10% 250V
#C25	⚠ 1-113-915-51	s	CERAMIC 0.0033uF 10% 250V
C27	1-125-678-11	s	ELECT 1800uF 20% 200V
C28	1-125-678-11	s	ELECT 1800uF 20% 200V
C29	1-125-678-11	s	ELECT 1800uF 20% 200V
C30	1-125-678-11	s	ELECT 1800uF 20% 200V
C31	1-107-675-11	s	ELECT 1uF 20% 450V
C101	1-161-896-11	s	CERAMIC 0.22uF 50V
C102	1-124-491-11	s	ELECT 680uF 20% 25V
C103	1-124-491-11	s	ELECT 680uF 20% 25V
C104	1-126-148-11	s	ELECT 820uF 20% 63V

NOTE : For the parts marked # in the parts list, refer to "Section 23 Changed Parts".

(PS-256 BOARD(DVR-2000/2100))

Ref. No. or Q'ty	Part No.	SP	Description
C105	1-126-148-11	s	ELECT 820uF 20% 63V
C106	1-161-898-11	s	CERAMIC 0.47uF 50V
C107	1-124-568-00	s	ELECT 4700uF 20% 10V
C108	1-124-568-00	s	ELECT 4700uF 20% 10V
C109	1-124-568-00	s	ELECT 4700uF 20% 10V
C110	1-126-328-11	s	ELECT 6800uF 20% 10V
C111	1-126-328-11	s	ELECT 6800uF 20% 10V
C112	1-126-328-11	s	ELECT 6800uF 20% 10V
C113	1-126-329-11	s	ELECT 470uF 20% 50V
C114	1-126-329-11	s	ELECT 470uF 20% 50V
C115	1-126-329-11	s	ELECT 470uF 20% 50V
C116	1-126-329-11	s	ELECT 470uF 20% 50V
C117	1-126-301-11	s	ELECT 1uF 20% 50V
C118	1-126-301-11	s	ELECT 1uF 20% 50V
C119	1-124-234-00	s	ELECT 22uF 20% 16V
C120	1-161-485-00	s	CERAMIC 0.1uF 50V
C121	1-124-234-00	s	ELECT 22uF 20% 16V
C122	1-161-485-00	s	CERAMIC 0.1uF 50V
C123	1-161-485-00	s	CERAMIC 0.1uF 50V
C124	1-161-485-00	s	CERAMIC 0.1uF 50V
#C125	1-124-579-51	s	ELECT 1000uF 20% 16V
#C126	1-124-579-51	s	ELECT 1000uF 20% 16V
#C127	1-124-579-51	s	ELECT 1000uF 20% 16V
#C128	1-124-579-51	s	ELECT 1000uF 20% 16V
#C129	1-124-579-51	s	ELECT 1000uF 20% 16V
#C130	1-124-579-51	s	ELECT 1000uF 20% 16V
#C131	1-111-059-11	s	ELECT 220uF 20% 25V
C132	1-126-146-11	s	ELECT 1000uF 20% 35V
C133	1-126-146-11	s	ELECT 1000uF 20% 35V
C134	1-126-146-11	s	ELECT 1000uF 20% 35V
#C135	1-111-059-11	s	ELECT 220uF 20% 25V
C136	1-126-146-11	s	ELECT 1000uF 20% 35V
C137	1-126-146-11	s	ELECT 1000uF 20% 35V
C138	1-126-146-11	s	ELECT 1000uF 20% 35V
#C139	1-111-059-11	s	ELECT 220uF 20% 25V
C141	1-126-145-11	s	ELECT 680uF 20% 35V
C142	1-161-485-00	s	CERAMIC 0.1uF 50V
C143	1-161-485-00	s	CERAMIC 0.1uF 50V
C144	1-161-485-00	s	CERAMIC 0.1uF 50V
C155	1-161-485-00	s	CERAMIC 0.1uF 50V
C156	1-131-350-00	s	TANTALUM 3.3uF 10% 35V
C157	1-131-350-00	s	TANTALUM 3.3uF 10% 35V
CN103	1-560-752-00	o	CONNECTOR, 9P, MALE
CN104	1-560-309-00	o	CONNECTOR, IL 3P, MALE
CN105	1-506-625-11	o	CONNECTOR, PS 20P, MALE
CN106	1-568-579-11	o	CONNECTOR, PS 12P, FEMALE
CN107	1-506-620-11	o	CONNECTOR, PS 10P, MALE
CN108	1-506-617-11	o	CONNECTOR, PS 4P, MALE
CN109	1-560-300-00	o	CONNECTOR, IL 3P, MALE
CN110	1-560-301-00	o	CONNECTOR, IL 4P, MALE
CN111	1-560-300-00	o	CONNECTOR, IL 3P, MALE
CN112	1-560-304-00	o	CONNECTOR, IL 8P, MALE
CN113	1-560-883-11	o	CONNECTOR, 7P, MALE
CN114	1-560-883-11	o	CONNECTOR, 7P, MALE
CN115	1-560-883-11	o	CONNECTOR, 7P, MALE
CN116	1-560-883-11	o	CONNECTOR, 7P, MALE
CN117	1-560-883-11	o	CONNECTOR, 7P, MALE
CN118	1-560-883-11	o	CONNECTOR, 7P, MALE

NOTE : Please see page 22-42 for the parts that are not listed in the parts list.

(PS-256 BOARD(DVR-2000/2100))

Ref. No. or Q'ty	Part No.	SP	Description
CN119	1-509-988-00	o	HOUSING, IL 8P
CN119	1-560-304-00	o	CONNECTOR, IL 8P, MALE
CN120	1-509-988-00	o	HOUSING, IL 8P
CN120	1-560-304-00	o	CONNECTOR, IL 8P, MALE
CN721	1-561-073-00	o	HOUSING, 15P
#CP1	1-235-966-21	s	ENCAPSULATED COMPONENTS, CR
#CP101	1-235-966-21	s	ENCAPSULATED COMPONENTS, CR
#CP103	1-235-965-21	s	ENCAPSULATED COMPONENTS, CR
#CP104	1-235-965-21	s	ENCAPSULATED COMPONENTS, CR
#CP105	1-235-965-21	s	ENCAPSULATED COMPONENTS, CR
#CP106	1-235-966-21	s	ENCAPSULATED COMPONENTS, CR
#CP108	1-235-965-21	s	ENCAPSULATED COMPONENTS, CR
#CP109	1-235-965-21	s	ENCAPSULATED COMPONENTS, CR
#CP111	1-235-966-21	s	ENCAPSULATED COMPONENTS, CR
D1	8-719-200-02	s	DIODE 10E2
D2	8-719-500-27	s	DIODE S15VB60
D3	8-719-200-02	s	DIODE 10E2
D4	8-719-200-02	s	DIODE 10E2
D5	8-719-110-60	s	DIODE RD24E-B
D6	8-719-110-41	s	DIODE RD15ES-B2
D7	8-719-110-49	s	DIODE RD18ES-B2
D8	8-719-901-17	s	DIODE V11L
D9	1-806-660-11	s	DIODE ESAB85-009
D10	8-719-200-02	s	DIODE 10E2
D101	8-719-903-16	s	DIODE ESAC85-009
D102	8-719-500-71	s	DIODE D8LC40
D103	8-719-901-18	s	DIODE ESAD83-004
D104	8-719-901-18	s	DIODE ESAD83-004
D105	8-719-901-18	s	DIODE ESAD83-004
#D106	8-719-025-10	s	DIODE D8LC20U
D107	8-719-025-11	s	DIODE D8LC20UR
D108	8-719-500-31	s	DIODE S10SC4MR
D109	8-719-500-31	s	DIODE S10SC4MR
D110	8-719-500-42	s	DIODE D8LCA20R
D111	8-719-928-19	s	DIODE ESAC92-02
D112	8-719-907-25	s	DIODE ERA84-009
D113	8-719-110-57	s	DIODE RD22ES-B2
D114	8-719-110-53	s	DIODE RD20ES-B2
D115	8-719-980-78	s	DIODE ERA81-004
D117	8-719-200-02	s	DIODE 10E2
F1	⚠ 1-532-496-21	s	FUSE, THERMAL 109-DEG-C 10A 250V
F2	⚠ 1-576-133-11	s	FUSE 3.15A 250V (FOR UC)
#F2	⚠ 1-576-230-41	s	FUSE (H.B.C) (FOR EK)
FB101	1-543-528-11	s	BEAD, AMORPHOUS
FB102	1-543-528-11	s	BEAD, AMORPHOUS
#IC1	1-810-270-11	s	IC BP-026
#IC2	1-810-270-11	s	IC BP-026
#IC3	1-810-270-11	s	IC BP-026
#IC4	1-810-270-11	s	IC BP-026
#IC5	1-810-270-11	s	IC BP-026
#IC6	1-810-270-11	s	IC BP-026
#IC7	⚠ 8-749-23-0-41	s	PHOTOCOUPLER PC817Y1
IC101	8-759-231-58	s	IC TA7812S
IC102	8-759-929-65	s	IC LM7912CT
IC103	8-759-003-17	s	IC LM317T
IC104	8-759-903-37	s	IC LM337T
IC105	8-759-231-58	s	IC TA7812S
IC106	8-759-903-37	s	IC LM337T

NOTE : For the parts marked # in the parts list, refer to "Section 23 Changed Parts".

(PS-256 BOARD(DVR-2000/2100))

Ref. No. or Q'ty	Part No.	SP	Description
L1	⚠ 1-421-779-11	s	FILTER, LINE
L2	1-421-541-00	s	COIL, CHOKE 1mH
L101	1-414-049-11	s	COIL, CHOKE 400uH
L102	1-414-049-11	s	COIL, CHOKE 400uH
L103	1-421-329-00	s	COIL, CHOKE
L104	1-421-329-00	s	COIL, CHOKE
L105	1-414-048-11	s	COIL, CHOKE 100uH
L106	1-414-048-11	s	COIL, CHOKE 100uH
L107	1-414-048-11	s	COIL, CHOKE 100uH
L108	1-408-299-00	s	COIL, CHOKE
L109	1-408-299-00	s	COIL, CHOKE
L110	1-408-299-00	s	COIL, CHOKE
L111	1-412-019-11	s	COIL, CHOKE
L112	1-421-459-00	s	COIL, CHOKE
L113	1-412-019-11	s	COIL, CHOKE
L114	1-421-459-00	s	COIL, CHOKE
L115	1-412-019-11	s	COIL, CHOKE
L116	1-421-459-00	s	COIL, CHOKE
L117	1-412-019-11	s	COIL, CHOKE
L118	1-421-459-00	s	COIL, CHOKE
L119	1-412-019-11	s	COIL, CHOKE
L120	1-421-459-00	s	COIL, CHOKE
L121	1-412-019-11	s	COIL, CHOKE
L122	1-421-459-00	s	COIL, CHOKE
L123	1-459-106-00	s	COIL 820uH
Q1	8-729-208-29	s	TRANSISTOR 2SK385
Q2	8-729-208-29	s	TRANSISTOR 2SK385
Q3	8-729-208-29	s	TRANSISTOR 2SK385
Q4	8-729-208-29	s	TRANSISTOR 2SK385
Q5	8-729-208-29	s	TRANSISTOR 2SK385
Q6	8-729-208-29	s	TRANSISTOR 2SK385
Q7	8-729-307-58	s	TRANSISTOR 2SC1775A
Q8	8-729-208-28	s	TRANSISTOR 2SK528
Q101	8-729-904-38	s	TRANSISTOR 2SD1118
Q102	8-729-202-48	s	TRANSISTOR 2SD717-Y
Q103	8-729-202-48	s	TRANSISTOR 2SD717-Y
Q104	8-729-202-48	s	TRANSISTOR 2SD717-Y
Q105	8-729-202-48	s	TRANSISTOR 2SD717-Y
Q106	8-729-900-07	s	TRANSISTOR 2SB757
Q110	8-729-422-57	s	TRANSISTOR UN4111
Q111	8-729-900-85	s	TRANSISTOR DTC144WS
Q112	8-729-422-57	s	TRANSISTOR UN4111
Q113	8-729-900-85	s	TRANSISTOR DTC144WS
Q114	8-729-900-85	s	TRANSISTOR DTC144WS
R1	1-214-937-00	s	METAL 1M 1% 1/2W
R2	1-247-901-11	s	CARBON 820k 5% 1/4
R3	1-247-901-11	s	CARBON 820k 5% 1/4
R4	⚠ 1-205-902-21	s	WIREWOUND 12 5% 20W
R5	1-205-903-11	s	WIREWOUND 24k 5% 5W
R6	1-205-903-11	s	WIREWOUND 24k 5% 5W
R7	1-215-912-11	s	METAL 150 5% 3W
R8	1-249-417-11	s	CARBON 1k 5% 1/4W
R9	1-215-912-11	s	METAL 150 5% 3W
R10	1-215-912-11	s	METAL 150 5% 3W
R11	1-215-415-00	s	METAL 560 1% 1/6W
R12	1-215-904-11	s	METAL 100k 5% 2W
R13	1-249-417-11	s	CARBON 1k 5% 1/4W
R14	1-249-417-11	s	CARBON 1k 5% 1/4W

NOTE : Please see page 22-42 for the parts that are not listed in the parts list.

(PS-256 BOARD(DVR-2000/2100))

Ref. No. or Q'ty	Part No.	SP	Description
R15	1-249-431-11	s	CARBON 15k 5% 1/4W
R16	⚠ 1-217-699-11	s	RES, FUSIBLE 750 5% 2W
R17	⚠ 1-217-699-11	s	RES, FUSIBLE 750 5% 2W
R20	1-215-487-00	s	METAL 560k 1% 1/6W
R21	1-215-487-00	s	METAL 560k 1% 1/6W
R22	1-215-449-00	s	METAL 15k 1% 1/6W
R101	1-215-437-00	s	METAL 4.7k 1% 1/6W
R102	1-215-419-00	s	METAL 820 1% 1/6W
R103	1-249-397-11	s	CARBON 22 5% 1/4W
R104	1-249-433-11	s	CARBON 22k 5% 1/4W
R105	1-249-416-11	s	CARBON 820 5% 1/4W
R106	1-249-419-11	s	CARBON 1.5k 5% 1/4W
R107	1-249-417-11	s	CARBON 1k 5% 1/4W
R108	1-218-242-11	s	METAL 82 1% 10W
R109	1-218-243-11	s	METAL 390 1% 10W
R110	1-218-241-11	s	METAL 33 1% 10W
R111	1-218-241-11	s	METAL 33 1% 10W
R112	1-218-240-11	s	METAL 10 1% 10W
R113	1-215-397-00	s	METAL 100 1% 1/6W
R114	1-215-421-00	s	METAL 1k 1% 1/6W
R115	1-215-412-00	s	METAL 430 1% 1/6W
R116	1-215-397-00	s	METAL 100 1% 1/6W
R117	1-215-421-00	s	METAL 1k 1% 1/6W
R118	1-215-412-00	s	METAL 430 1% 1/6W
R119	1-216-398-11	s	METAL 5.6 5% 3W
R120	1-216-398-11	s	METAL 5.6 5% 3W
R121	1-207-612-00	s	WIREWOUND 0.1 10% 3W
R122	1-207-612-00	s	WIREWOUND 0.1 10% 3W
R123	1-207-612-00	s	WIREWOUND 0.1 10% 3W
R124	1-207-612-00	s	WIREWOUND 0.1 10% 3W
R125	1-207-612-00	s	WIREWOUND 0.1 10% 3W
R126	1-249-409-11	s	CARBON 220 5% 1/4W
R127	1-249-417-11	s	CARBON 1k 5% 1/4W
R128	1-249-417-11	s	CARBON 1k 5% 1/4W
R130	1-249-431-11	s	CARBON 15k 5% 1/4W
R131	1-247-847-31	s	CARBON 4.7k 5% 1/4W
R132	1-249-427-11	s	CARBON 6.8k 5% 1/4W
R134	1-249-397-11	s	CARBON 22 5% 1/4W
R135	1-249-393-11	s	CARBON 10 5% 1/4W
R136	1-215-415-00	s	METAL 560 1% 1/6W
R137	1-215-392-00	s	METAL 62 1% 1/6W
RY1	⚠ 1-515-868-11	o	RELAY
RY2	⚠ 1-515-576-11	s	RELAY
RY3	⚠ 1-515-451-21	s	RELAY
S1	⚠ 1-571-792-11	s	SWITCH, REED, THERMAL 95-DEG-C
S100	⚠ 1-572-105-11	s	SWITCH, REED, THERMAL 85-DEG-C
T1	⚠ 1-437-190-11	s	TRANSFORMER, DRIVE
T2	⚠ 1-437-190-11	s	TRANSFORMER, DRIVE
T3	⚠ 1-437-190-11	s	TRANSFORMER, DRIVE
T4	⚠ 1-437-190-11	s	TRANSFORMER, DRIVE
T5	⚠ 1-437-190-11	s	TRANSFORMER, DRIVE
T6	⚠ 1-437-190-11	s	TRANSFORMER, DRIVE
T7	⚠ 1-448-791-12	s	TRANSFORMER, CONVERTER
T8	⚠ 1-448-789-11	s	TRANSFORMER, CONVERTER
T9	⚠ 1-448-790-11	s	TRANSFORMER, CONVERTER
T10	⚠ 1-449-135-11	s	TRANSFORMER, CONVERTER
VDR1	1-806-356-00	s	VARISTOR ENB461-10A

NOTE : For the parts marked # in the parts list, refer to "Section 23 Changed Parts".

RE-52 BOARD(DVR-2000/2100)

Ref. No. or Q'ty	Part No.	SP	Description
1pc	A-6023-054-B	o	MOUNTED CIRCUIT BOARD, RE-52
C1	1-124-589-11	s	ELECT 47uF 20% 16V
C4	1-164-232-11	s	CERAMIC, CHIP 0.01uF 10% 100V
C5	1-163-251-11	s	CERAMIC, CHIP 100pF 5% 50V
C7	1-163-251-11	s	CERAMIC, CHIP 100pF 5% 50V
C8	1-164-232-11	s	CERAMIC, CHIP 0.01uF 10% 100V
C9	1-163-251-11	s	CERAMIC, CHIP 100pF 5% 50V
C10	1-163-251-11	s	CERAMIC, CHIP 100pF 5% 50V
C11	1-163-125-00	s	CERAMIC, CHIP 220pF 5% 50V
C13	1-163-251-11	s	CERAMIC, CHIP 100pF 5% 50V
C14	1-164-232-11	s	CERAMIC, CHIP 0.01uF 10% 100V
C17	1-164-232-11	s	CERAMIC, CHIP 0.01uF 10% 100V
C18	1-164-232-11	s	CERAMIC, CHIP 0.01uF 10% 100V
C20	1-164-232-11	s	CERAMIC, CHIP 0.01uF 10% 100V
C21	1-164-232-11	s	CERAMIC, CHIP 0.01uF 10% 100V
C22	1-163-263-11	s	CERAMIC, CHIP 330pF 5% 50V
C23	1-162-806-11	s	CERAMIC 0.1uF 10% 50V
C24	1-162-810-11	s	CERAMIC 0.22uF 10% 50V
C25	1-163-125-00	s	CERAMIC, CHIP 220pF 5% 50V
C26	1-164-161-11	s	CERAMIC, CHIP 0.0022uF 10% 100V
C27	1-162-568-11	s	CERAMIC, CHIP 0.33uF 25V
C28	1-162-800-11	s	CERAMIC 0.033uF 10% 50V
C29	1-124-589-11	s	ELECT 47uF 20% 16V
C30	1-131-353-00	s	TANTALUM 10uF 10% 35V
C33	1-163-121-00	s	CERAMIC, CHIP 150pF 5% 50V
C35	1-131-375-00	s	TANTALUM 4.7uF 10% 10V
C37	1-131-351-00	s	TANTALUM 4.7uF 10% 35V
C38	1-131-353-00	s	TANTALUM 10uF 10% 35V
C40	1-162-808-11	s	CERAMIC 0.15uF 10% 50V
C42	1-124-589-11	s	ELECT 47uF 20% 16V
C50	1-131-370-00	s	TANTALUM 6.8uF 10% 16V
CN113	1-561-975-11	o	CONNECTOR, 7P, FEMALE
CN114	1-561-975-11	o	CONNECTOR, 7P, FEMALE
CN115	1-561-975-11	o	CONNECTOR, 7P, FEMALE
CN116	1-561-975-11	o	CONNECTOR, 7P, FEMALE
CN117	1-561-975-11	o	CONNECTOR, 7P, FEMALE
CN118	1-561-975-11	o	CONNECTOR, 7P, FEMALE
D1	8-719-911-19	s	DIODE 1SS119
D2	8-719-911-19	s	DIODE 1SS119
D3	8-719-109-72	s	DIODE RD3.9ES-B2
D4	8-719-911-19	s	DIODE 1SS119
D5	8-719-911-19	s	DIODE 1SS119
D6	8-719-109-72	s	DIODE RD3.9ES-B2
D7	8-719-911-19	s	DIODE 1SS119
D8	8-719-911-19	s	DIODE 1SS119
D9	8-719-109-72	s	DIODE RD3.9ES-B2
D10	8-719-102-51	s	DIODE 1SZ51
D11	8-719-102-51	s	DIODE 1SZ51
D12	8-719-911-19	s	DIODE 1SS119
D13	8-719-110-13	s	DIODE RD9.1ES-B2
D14	8-719-109-81	s	DIODE RD4.7ES-B2
IC1	8-759-708-05	s	IC NJM78L05A
IC2	8-759-510-71	s	IC BA10358F
IC3	8-759-113-12	s	IC UPC4084C
IC4	8-719-987-38	s	PHOTOCOUPLER PC827
IC5	8-759-085-67	s	IC LM339NS
IC6	8-759-906-22	s	IC MB3759PF

NOTE : Please see page 22-42 for the parts that are not listed in the parts list.

(RE-52 BOARD(DVR-2000/2100))

Ref. No. or Q'ty	Part No.	SP	Description
IC7	8-759-200-79	s	IC TC4049BF
IC8	8-759-008-79	s	IC MC14011BF
IC9	8-759-008-74	s	IC MC14001BF
IC10	8-759-009-51	s	IC MC14538BF
IC11	8-759-906-22	s	IC MB3759PF
L1	1-421-329-00	s	COIL, CHOKE
L2	1-421-329-00	s	COIL, CHOKE
Q1	8-729-169-02	s	TRANSISTOR 2SC2690A
Q2	8-729-122-03	s	TRANSISTOR 2SA1220A-P
Q3	8-729-122-03	s	TRANSISTOR 2SA1220A-P
Q4	8-729-122-03	s	TRANSISTOR 2SA1220A-P
Q5	8-729-900-85	s	TRANSISTOR DTC144WS
Q6	8-729-105-72	s	TRANSISTOR 2SK523-L1
Q7	8-729-105-72	s	TRANSISTOR 2SK523-L1
Q8	8-729-900-65	s	TRANSISTOR DTA144ES
Q9	8-729-900-85	s	TRANSISTOR DTC144WS
Q10	8-729-900-65	s	TRANSISTOR DTA144ES
Q11	8-729-140-93	s	TRANSISTOR 2SB733-34
R1	1-216-001-00	s	METAL, CHIP 10 5% 1/10W
R2	1-216-009-00	s	METAL, CHIP 22 5% 1/10W
R3	1-216-061-00	s	METAL, CHIP 3.3k 5% 1/10W
R4	1-216-033-00	s	METAL, CHIP 220 5% 1/10W
R5	1-216-045-00	s	METAL, CHIP 680 5% 1/10W
R6	1-216-067-00	s	METAL, CHIP 5.6k 5% 1/10W
R7	1-216-065-00	s	METAL, CHIP 4.7k 5% 1/10W
R8	1-216-075-00	s	METAL, CHIP 12k 5% 1/10W
R9	1-216-071-00	s	METAL, CHIP 8.2k 5% 1/10W
R10	1-216-103-91	s	METAL, CHIP 180k 5% 1/10W
R11	1-216-057-00	s	METAL, CHIP 2.2k 5% 1/10W
R12	1-216-065-00	s	METAL, CHIP 4.7k 5% 1/10W
R13	1-216-107-00	s	METAL, CHIP 270k 5% 1/10W
R14	1-216-057-00	s	METAL, CHIP 2.2k 5% 1/10W
R15	1-216-065-00	s	METAL, CHIP 4.7k 5% 1/10W
R16	1-216-017-00	s	METAL, CHIP 47 5% 1/10W
R17	1-216-009-00	s	METAL, CHIP 22 5% 1/10W
R18	1-216-061-00	s	METAL, CHIP 3.3k 5% 1/10W
R19	1-216-033-00	s	METAL, CHIP 220 5% 1/10W
R20	1-216-045-00	s	METAL, CHIP 680 5% 1/10W
R21	1-216-067-00	s	METAL, CHIP 5.6k 5% 1/10W
R22	1-216-065-00	s	METAL, CHIP 4.7k 5% 1/10W
R23	1-216-075-00	s	METAL, CHIP 12k 5% 1/10W
R24	1-216-071-00	s	METAL, CHIP 8.2k 5% 1/10W
R25	1-216-103-91	s	METAL, CHIP 180k 5% 1/10W
R26	1-216-057-00	s	METAL, CHIP 2.2k 5% 1/10W
R27	1-216-065-00	s	METAL, CHIP 4.7k 5% 1/10W
R28	1-216-107-00	s	METAL, CHIP 270k 5% 1/10W
R29	1-216-057-00	s	METAL, CHIP 2.2k 5% 1/10W
R30	1-216-065-00	s	METAL, CHIP 4.7k 5% 1/10W
R31	1-216-017-00	s	METAL, CHIP 47 5% 1/10W
R32	1-216-017-00	s	METAL, CHIP 47 5% 1/10W
R33	1-216-001-00	s	METAL, CHIP 10 5% 1/10W
R34	1-216-061-00	s	METAL, CHIP 3.3k 5% 1/10W
R35	1-216-033-00	s	METAL, CHIP 220 5% 1/10W
R36	1-216-045-00	s	METAL, CHIP 680 5% 1/10W
R37	1-216-067-00	s	METAL, CHIP 5.6k 5% 1/10W
R38	1-216-075-00	s	METAL, CHIP 12k 5% 1/10W
R39	1-216-043-00	s	METAL, CHIP 560 5% 1/10W
R40	1-216-067-00	s	METAL, CHIP 5.6k 5% 1/10W

NOTE : For the parts marked # in the parts list, refer to "Section 23 Changed Parts".

(RE-52 BOARD(DVR-2000/2100))

Ref. No. or Q'ty	Part No.	SP	Description
R41	1-216-065-00	s	METAL, CHIP 4.7k 5% 1/10W
R42	1-216-025-00	s	METAL, CHIP 100 5% 1/10W
R43	1-216-107-00	s	METAL, CHIP 270k 5% 1/10W
R44	1-216-025-00	s	METAL, CHIP 100 5% 1/10W
R45	1-216-065-00	s	METAL, CHIP 4.7k 5% 1/10W
R46	1-216-021-00	s	METAL, CHIP 68 5% 1/10W
R47	1-216-045-00	s	METAL, CHIP 680 5% 1/10W
R48	1-216-045-00	s	METAL, CHIP 680 5% 1/10W
R49	1-216-079-00	s	METAL, CHIP 18k 5% 1/10W
R50	1-216-075-00	s	METAL, CHIP 12k 5% 1/10W
R51	1-216-067-00	s	METAL, CHIP 5.6k 5% 1/10W
R52	1-216-091-00	s	METAL, CHIP 56k 5% 1/10W
R53	1-216-063-00	s	METAL, CHIP 3.9k 5% 1/10W
R54	1-216-083-00	s	METAL, CHIP 27k 5% 1/10W
R55	1-216-049-00	s	METAL, CHIP 1k 5% 1/10W
R56	1-216-073-00	s	METAL, CHIP 10k 5% 1/10W
R57	1-216-077-00	s	METAL, CHIP 15k 5% 1/10W
R58	1-216-077-00	s	METAL, CHIP 15k 5% 1/10W
R59	1-216-061-00	s	METAL, CHIP 3.3k 5% 1/10W
R60	1-216-065-00	s	METAL, CHIP 4.7k 5% 1/10W
R61	1-216-063-00	s	METAL, CHIP 3.9k 5% 1/10W
R62	1-216-047-00	s	METAL, CHIP 820 5% 1/10W
R63	1-216-085-00	s	METAL, CHIP 33k 5% 1/10W
R64	1-216-065-00	s	METAL, CHIP 4.7k 5% 1/10W
R65	1-216-049-00	s	METAL, CHIP 1k 5% 1/10W
R66	1-216-033-00	s	METAL, CHIP 220 5% 1/10W
R67	1-216-065-00	s	METAL, CHIP 4.7k 5% 1/10W
R68	1-216-001-00	s	METAL, CHIP 10 5% 1/10W
R69	1-216-033-00	s	METAL, CHIP 220 5% 1/10W
R70	1-216-077-00	s	METAL, CHIP 15k 5% 1/10W
R71	1-216-119-00	s	METAL, CHIP 820k 5% 1/10W
R72	1-216-085-00	s	METAL, CHIP 33k 5% 1/10W
R73	1-216-035-00	s	METAL, CHIP 270 5% 1/10W
R74	1-216-065-00	s	METAL, CHIP 4.7k 5% 1/10W
R75	1-216-067-00	s	METAL, CHIP 5.6k 5% 1/10W
R76	1-216-009-00	s	METAL, CHIP 22 5% 1/10W
R77	1-216-113-00	s	METAL, CHIP 470k 5% 1/10W
R78	1-216-025-00	s	METAL, CHIP 100 5% 1/10W
R79	1-216-119-00	s	METAL, CHIP 820k 5% 1/10W
R80	1-216-077-00	s	METAL, CHIP 15k 5% 1/10W
R81	1-216-103-91	s	METAL, CHIP 180k 5% 1/10W
R82	1-216-071-00	s	METAL, CHIP 8.2k 5% 1/10W
R83	1-216-053-00	s	METAL, CHIP 1.5k 5% 1/10W
R85	1-216-077-00	s	METAL, CHIP 15k 5% 1/10W
R86	1-216-063-00	s	METAL, CHIP 3.9k 5% 1/10W
R87	1-216-043-00	s	METAL, CHIP 560 5% 1/10W
R88	1-216-081-00	s	METAL, CHIP 22k 5% 1/10W
R89	1-216-049-00	s	METAL, CHIP 1k 5% 1/10W
R90	1-216-105-00	s	METAL, CHIP 220k 5% 1/10W
R91	1-216-105-00	s	METAL, CHIP 220k 5% 1/10W
R92	1-216-105-00	s	METAL, CHIP 220k 5% 1/10W
R93	1-216-063-00	s	METAL, CHIP 3.9k 5% 1/10W
R94	1-216-091-00	s	METAL, CHIP 56k 5% 1/10W
R95	1-216-081-00	s	METAL, CHIP 22k 5% 1/10W
R96	1-216-097-00	s	METAL, CHIP 100k 5% 1/10W
R97	1-216-055-00	s	METAL, CHIP 1.8k 5% 1/10W
R98	1-216-055-00	s	METAL, CHIP 1.8k 5% 1/10W
R99	1-216-055-00	s	METAL, CHIP 1.8k 5% 1/10W
R100	1-216-055-00	s	METAL, CHIP 1.8k 5% 1/10W

NOTE : Please see page 22-42 for the parts that are not listed in the parts list.

(RE-52 BOARD(DVR-2000/2100))

Ref. No. or Q'ty	Part No.	SP	Description
R101	1-216-119-00	s	METAL, CHIP 820k 5% 1/10W
R102	1-216-009-00	s	METAL, CHIP 22 5% 1/10W
R103	1-215-425-00	s	METAL 1.5k 1% 1/6W
RV1	1-237-517-21	s	RES, ADJ METAL 5k
RV2	1-237-515-21	s	RES, ADJ METAL 1k
RV3	1-237-517-21	s	RES, ADJ METAL 5k
RV4	1-237-515-21	s	RES, ADJ METAL 1k
RV5	1-237-517-21	s	RES, ADJ METAL 5k
RV6	1-237-513-21	s	RES, ADJ METAL 200
RV7	1-237-516-21	s	RES, ADJ METAL 2k
RV8	1-237-521-21	s	RES, ADJ METAL 100k
RV9	1-237-518-21	s	RES, ADJ METAL 10k
RV10	1-237-516-21	s	RES, ADJ METAL 2k

NOTE : For the parts marked # in the parts list, refer to "Section 23 Changed Parts".

REC-09 BOARD(DVR-2000/2100)

Ref. No. or Q'ty	Part No.	SP	Description
1pc	A-6019-042-A	o	MOUNTED CIRCUIT BOARD, REC-09
1pc	1-526-856-11	s	SOCKET, IC (PGA) 133P
1pc	1-540-083-11	s	SOCKET, IC (PGA) 89P
2pcs	1-540-085-11	s	SOCKET, IC (PGA) 135P
2pcs	1-540-206-11	s	SOCKET, IC (PGA) 209P
1pc	3-171-895-11	o	LABEL (P), SERIAL NUMBER
1pc	3-172-035-01	o	LABEL (1), SERIAL NUMBER,REC-09
2pcs	3-714-634-01	o	LEVER, PC BOARD
#2pcs	4-914-895-01	s	FOOT, RUBBER
2pcs	7-626-320-11	s	PIN, SPRING 3X8
9pcs	7-682-948-01	s	SCREW, +PSW 3x8
4pcs	7-685-547-14	s	SCREW, +BVTP 3x10 TYPE2 N-S
C1	1-124-522-11	s	ELECT 270uF 20% 16V
C2	1-164-097-11	s	CERAMIC 0.022uF 50V
C3	1-164-097-11	s	CERAMIC 0.022uF 50V
C4	1-164-097-11	s	CERAMIC 0.022uF 50V
C5	1-104-664-11	s	ELECT 47uF 20% 25V
C6	1-164-097-11	s	CERAMIC 0.022uF 50V
C7	1-131-351-00	s	TANTALUM 4.7uF 10% 35V
C8	1-130-491-00	s	MYLAR 0.047uF 5% 50V
C9	1-164-097-11	s	CERAMIC 0.022uF 50V
C10	1-131-347-00	s	TANTALUM 1uF 10% 35V
C11	1-164-097-11	s	CERAMIC 0.022uF 50V
#C12	1-126-791-11	s	ELECT 10uF 20% 16V
C13	1-164-097-11	s	CERAMIC 0.022uF 50V
C14	1-164-097-11	s	CERAMIC 0.022uF 50V
#C15	1-126-791-11	s	ELECT 10uF 20% 16V
C16	1-104-664-11	s	ELECT 47uF 20% 25V
C17	1-162-806-11	s	CERAMIC 0.1uF 10% 50V
C18	1-162-806-11	s	CERAMIC 0.1uF 10% 50V
C19	1-162-724-11	s	CERAMIC 390pF 1% 50V
C20	1-162-806-11	s	CERAMIC 0.1uF 10% 50V
C21	1-104-664-11	s	ELECT 47uF 20% 25V
#C22	1-107-582-11	s	CERAMIC 2pF 500V
C23	1-164-097-11	s	CERAMIC 0.022uF 50V
C24	1-164-097-11	s	CERAMIC 0.022uF 50V
#C25	1-101-890-00	s	CERAMIC 75pF 5% 50V
C26	1-104-664-11	s	ELECT 47uF 20% 25V
C27	1-164-097-11	s	CERAMIC 0.022uF 50V
#C28	1-102-852-91	s	CERAMIC 47pF 5% 50V
C29	1-107-594-11	s	CERAMIC 16pF 5% 500V
C30	1-162-806-11	s	CERAMIC 0.1uF 10% 50V
C31	1-162-806-11	s	CERAMIC 0.1uF 10% 50V
C32	1-164-097-11	s	CERAMIC 0.022uF 50V
#C33	1-126-791-11	s	ELECT 10uF 20% 16V
C34	1-164-097-11	s	CERAMIC 0.022uF 50V
C35	1-162-806-11	s	CERAMIC 0.1uF 10% 50V
C36	1-162-806-11	s	CERAMIC 0.1uF 10% 50V
C37	1-124-522-11	s	ELECT 270uF 20% 16V
C38	1-164-097-11	s	CERAMIC 0.022uF 50V
#C39	1-126-791-11	s	ELECT 10uF 20% 16V
C40	1-104-665-11	s	ELECT 47uF 20% 25V
C41	1-164-097-11	s	CERAMIC 0.022uF 50V
C42	1-164-097-11	s	CERAMIC 0.022uF 50V
#C43	1-126-791-11	s	ELECT 10uF 20% 16V
C44	1-162-806-11	s	CERAMIC 0.1uF 10% 50V
C45	1-162-806-11	s	CERAMIC 0.1uF 10% 50V

NOTE : Please see page 22-42 for the parts that are not listed in the parts list.

(REC-09 BOARD(DVR-2000/2100))

Ref. No. or Q'ty	Part No.	SP	Description
C46	1-161-900-11	s	CERAMIC 1uF 50V
C47	1-161-900-11	s	CERAMIC 1uF 50V
C48	1-164-097-11	s	CERAMIC 0.022uF 50V
#C49	1-131-353-00	s	TANTALUM 10uF 20% 35V
C50	1-130-471-00	s	MYLAR 0.001uF 5% 50V
C51	1-164-097-11	s	CERAMIC 0.022uF 50V
C52	1-131-347-00	s	TANTALUM 1uF 10% 35V
C53	1-164-097-11	s	CERAMIC 0.022uF 50V
C54	1-102-964-11	s	CERAMIC 36pF 5% 50V
C55	1-162-806-11	s	CERAMIC 0.1uF 10% 50V
C56	1-162-806-11	s	CERAMIC 0.1uF 10% 50V
C57	1-162-806-11	s	CERAMIC 0.1uF 10% 50V
C58	1-162-806-11	s	CERAMIC 0.1uF 10% 50V
C59	1-124-522-11	s	ELECT 270uF 20% 16V
C60	1-124-522-11	s	ELECT 270uF 20% 16V
C61	1-124-522-11	s	ELECT 270uF 20% 16V
C62	1-124-522-11	s	ELECT 270uF 20% 16V
C63	1-124-522-11	s	ELECT 270uF 20% 16V
C64	1-124-522-11	s	ELECT 270uF 20% 16V
C65	1-104-664-11	s	ELECT 47uF 20% 25V
C222	1-162-875-11	s	CERAMIC 68pF 5% 50V
CN503	1-565-207-21	s	CONNECTOR, DIN 128P, MALE
CN504	1-565-207-21	s	CONNECTOR, DIN 128P, MALE
CP1	1-231-455-00	s	ENCAPSULATED COMPONENTS, CR
CP2	1-231-455-00	s	ENCAPSULATED COMPONENTS, CR
CP3	1-231-455-00	s	ENCAPSULATED COMPONENTS, CR
CP4	1-231-455-00	s	ENCAPSULATED COMPONENTS, CR
CP5	1-231-455-00	s	ENCAPSULATED COMPONENTS, CR
CP6	1-231-455-00	s	ENCAPSULATED COMPONENTS, CR
CP7	1-231-455-00	s	ENCAPSULATED COMPONENTS, CR
CP8	1-231-455-00	s	ENCAPSULATED COMPONENTS, CR
D1	8-719-911-19	s	DIODE 1SS119
D2	8-719-911-19	s	DIODE 1SS119
D3	8-719-109-63	s	DIODE RD3.0E-B
D4	8-719-820-12	s	LED TLR224, RED
D5	8-719-400-35	s	LED LN35BP, GRN
D6	8-719-400-35	s	LED LN35BP, GRN
D7	8-719-400-35	s	LED LN35BP, GRN
D8	8-719-400-35	s	LED LN35BP, GRN
ICA16	8-759-945-30	s	IC SN75ALS194N
ICA18	8-759-945-30	s	IC SN75ALS194N
ICA19	8-752-357-15	s	IC CXD2343S
ICB1	8-743-651-00	s	IC BX-365A
ICB2	8-741-122-90	s	IC BX-1229
ICB4	8-759-917-05	s	IC SN74HC541N
ICB5	8-759-002-78	s	IC MC10H125L
ICB6	8-759-002-78	s	IC MC10H125L
ICB7	8-759-917-06	s	IC SN74HC574N
ICB8	8-759-917-06	s	IC SN74HC574N
ICB9	8-759-917-05	s	IC SN74HC541N
ICB10	8-759-921-34	s	IC SN74HC245N
ICB11	8-759-917-06	s	IC SN74HC574N
ICB12	8-759-902-40	s	IC SN74LS240N
ICB13	8-759-917-05	s	IC SN74HC541N

NOTE : For the parts marked # in the parts list, refer to "Section 23 Changed Parts".

(REC-09 BOARD(DVR-2000/2100))

Ref. No. or Q'ty	Part No.	SP	Description
ICB14	8-759-917-05	s	IC SN74HC541N
ICB15	8-759-980-06	s	IC 74AC74PC
ICB17	8-759-916-55	s	IC SN74HC175N
ICB18	8-759-917-06	s	IC SN74HC574N
ICB19	8-752-357-15	s	IC CXD2343S
ICC1	8-759-103-19	s	IC UPC319C
ICC2	8-741-104-00	s	IC BX1040
ICC3	8-759-708-05	s	IC NJM78L05A
ICC4	8-759-002-78	s	IC MC10H125L
ICC5	8-759-002-78	s	IC MC10H125L
ICC6	8-759-916-40	s	IC SN74HC125N
ICC7	8-759-926-32	s	IC AM26LS32PC
ICC8	8-759-902-40	s	IC SN74LS240N
ICC9	8-759-917-06	s	IC SN74HC574N
ICC10	8-759-917-05	s	IC SN74HC541N
ICC11	8-759-926-32	s	IC AM26LS32PC
ICC12	8-759-945-30	s	IC SN75ALS194N
ICC16	8-759-060-75	s	IC 7C291L-REC0901-1, PROM
ICC17	8-759-060-76	s	IC 7C291L-REC0902-2, PROM
ICC19	8-759-916-25	s	IC SN74HC32AN
ICD1	8-759-900-04	s	IC SN74LS04N
ICD4	8-759-002-77	s	IC MC10H124L
ICD6	8-759-164-99	s	IC CXD8069BG
ICD9	8-759-044-86	s	IC CXD8225AG
ICD11	8-759-902-40	s	IC SN74LS240N
ICD16	8-759-916-97	s	IC SN74HCT374N
ICD17	8-759-916-98	s	IC SN74HC377N
ICD18	8-759-060-77	s	IC 27C512-REC0903-1, EPROM
ICE1	8-752-306-51	s	IC CX23065A
ICE3	8-759-510-22	s	IC CXD8046G
ICE11	8-759-916-14	s	IC SN74HC04N
ICE12	8-759-515-64	s	IC IDT74FCT821ATP
ICE13	8-759-515-64	s	IC IDT74FCT821ATP
ICE14	8-759-515-64	s	IC IDT74FCT821ATP
ICE15	8-759-147-02	s	IC UPD42101C-3
ICE16	8-759-147-02	s	IC UPD42101C-3
ICE17	8-759-916-97	s	IC SN74HCT374N
ICE18	8-759-060-78	s	IC 7C235-REC0904-1, PROM
ICE19	8-752-357-15	s	IC CXD2343S
ICF3	8-752-306-51	s	IC CX23065A
ICF5	8-759-916-97	s	IC SN74HCT374N
ICF6	8-759-070-49	s	IC CXD8224ASP
ICF7	8-759-070-49	s	IC CXD8224ASP
ICF8	8-759-147-02	s	IC UPD42101C-3
ICF9	8-759-147-02	s	IC UPD42101C-3
ICF10	8-759-917-05	s	IC SN74HC541N
ICF11	8-759-917-05	s	IC SN74HC541N
ICF12	8-759-916-97	s	IC SN74HCT374N
ICF13	8-759-916-97	s	IC SN74HCT374N
ICF15	8-759-289-69	s	IC CXD8280AQ
ICF17	8-759-007-09	s	IC MC74HC540N
ICF18	8-759-060-81	s	IC 7C235-REC0907-1, PROM
ICF19	8-752-357-15	s	IC CXD2343S
ICG1	8-759-918-23	s	IC NE527N
ICG3	8-759-918-23	s	IC NE527N
ICG5	8-759-904-80	s	IC 74F04PC
ICG8	8-759-916-97	s	IC SN74HCT374N
ICG9	8-759-916-97	s	IC SN74HCT374N
ICG10	8-759-060-80	s	IC 27HC642-REC0906-2, EPROM
ICG11	8-759-060-79	s	IC 27HC642-REC0905-2, EPROM

NOTE : Please see page 22-42 for the parts that are not listed in the parts list.

(REC-09 BOARD(DVR-2000/2100))

Ref. No. or Q'ty	Part No.	SP	Description
ICG17	8-759-916-53	s	IC SN74HC166N
ICG18	8-759-916-53	s	IC SN74HC166N
ICG19	8-759-293-91	s	IC MSM514222B-30ZS
ICH1	8-759-505-73	s	IC CY7C199-45PC
ICH2	8-759-505-73	s	IC CY7C199-45PC
ICH3	8-759-505-73	s	IC CY7C199-45PC
ICH4	8-759-505-73	s	IC CY7C199-45PC
ICH6	8-759-517-89	s	IC CXD8099G
ICH8	8-759-917-05	s	IC SN74HC541N
ICH9	8-759-917-05	s	IC SN74HC541N
ICH11	8-752-357-15	s	IC CXD2343S
ICH13	8-759-518-15	s	IC CXD8247Q
ICH15	8-759-517-87	s	IC CXD8093Q
ICH18	8-759-032-81	s	IC MC74HC74N
ICH17A	8-759-032-81	s	IC MC74HC74N
ICH17B	8-759-947-14	s	IC 74AC04PC
ICJ1	8-759-505-73	s	IC CY7C199-45PC
ICJ2	8-759-505-73	s	IC CY7C199-45PC
ICJ3	8-759-505-73	s	IC CY7C199-45PC
ICJ4	8-759-505-73	s	IC CY7C199-45PC
ICJ6	8-759-517-89	s	IC CXD8099G
ICJ8	8-759-917-05	s	IC SN74HC541N
ICJ9	8-759-917-05	s	IC SN74HC541N
ICJ10	8-759-916-97	s	IC SN74HCT374N
#ICJ11	8-759-299-49	s	IC CY7C164-25PC
#ICJ12	8-759-299-49	s	IC CY7C164-25PC
ICJ14	8-759-517-91	s	IC CXD8179G
#ICJ15	8-759-299-49	s	IC CY7C164-25PC
#ICJ16	8-759-299-49	s	IC CY7C164-25PC
ICJ18	8-759-916-18	s	IC SN74HC10N
ICJ19	8-759-917-05	s	IC SN74HC541N
ICK8	8-759-113-97	s	IC UPD42505C-50
ICK9	8-759-113-97	s	IC UPD42505C-50
ICK10	8-759-113-97	s	IC UPD42505C-50
#ICK11	8-759-299-49	s	IC CY7C164-25PC
#ICK12	8-759-299-49	s	IC CY7C164-25PC
#ICK15	8-759-299-49	s	IC CY7C164-25PC
#ICK16	8-759-299-49	s	IC CY7C164-25PC
ICK18	8-759-517-87	s	IC CXD8093Q
ICL1	8-752-057-37	s	IC CXA1629Q
ICL3	8-752-057-37	s	IC CXA1629Q
ICL12	8-759-921-17	s	IC MC74HC153N
ICL13	8-759-081-84	o	IC 5032PC-REC0908-4, PLD
ICL15	8-759-917-05	s	IC SN74HC541N
ICL16	8-759-917-06	s	IC SN74HC574N
ICL17	8-759-917-06	s	IC SN74HC574N
ICL18	8-759-917-06	s	IC SN74HC574N
ICL19	8-759-917-06	s	IC SN74HC574N
ICM13	8-759-916-16	s	IC MC74HC08AN
ICM14	8-759-916-12	s	IC SN74HC00N
ICM15	8-759-916-16	s	IC MC74HC08AN
ICM16	8-759-916-14	s	IC SN74HC04N
ICM17	8-759-916-14	s	IC SN74HC04N
ICM18	8-759-004-62	s	IC MC74HC30N
ICM19	8-759-004-62	s	IC MC74HC30N
ICN13	8-759-518-16	s	IC CXD8246Q
ICN17	8-759-518-14	s	IC CXD8248Q
JP1	1-566-388-11	s	CONNECTOR 8P, MALE

NOTE : For the parts marked # in the parts list, refer to "Section 23 Changed Parts".

(REC-09 BOARD(DVR-2000/2100))

Ref. No. or Q'ty	Part No.	SP	Description
L1	1-460-085-11	s	COIL, CHOKE 6.8UH
L2	1-460-085-11	s	COIL, CHOKE 6.8UH
#L3	1-410-513-51	s	INDUCTOR 22uH
#L4	1-410-509-51	s	INDUCTOR 10uH
#L5	1-410-509-51	s	INDUCTOR 10uH
#L6	1-410-501-51	s	INDUCTOR 2.2uH
#L7	1-414-140-51	s	INDUCTOR 0.68uH
#L8	1-410-513-51	s	INDUCTOR 22uH
#L9	1-410-509-51	s	INDUCTOR 10uH
#L10	1-410-509-51	s	INDUCTOR 10uH
#L11	1-410-505-51	s	INDUCTOR 4.7uH
L12	1-460-085-11	s	COIL, CHOKE 6.8UH
L13	1-460-085-11	s	COIL, CHOKE 6.8UH
L14	1-460-085-11	s	COIL, CHOKE 6.8UH
#L15	1-410-513-51	s	INDUCTOR 22uH
Q1	8-729-105-72	s	TRANSISTOR 2SK523-L1
Q2	8-729-105-72	s	TRANSISTOR 2SK523-L1
Q3	8-729-900-36	s	TRANSISTOR DTC124ES
R1	1-215-413-00	s	METAL 470 1% 1/6W
R2	1-215-373-31	s	METAL 10 1% 1/6W
R3	1-215-429-00	s	METAL 2.2k 1% 1/6W
R4	1-215-425-00	s	METAL 1.5k 1% 1/6W
R5	1-215-373-31	s	METAL 10 1% 1/6W
R6	1-215-423-00	s	METAL 1.2k 1% 1/6W
R7	1-215-421-00	s	METAL 1k 1% 1/6W
R8	1-215-469-00	s	METAL 100k 1% 1/6W
R9	1-215-469-00	s	METAL 100k 1% 1/6W
R10	1-215-437-00	s	METAL 4.7k 1% 1/6W
R11	1-215-461-00	s	METAL 47k 1% 1/6W
R12	1-215-411-00	s	METAL 390 1% 1/6W
R13	1-215-411-00	s	METAL 390 1% 1/6W
R14	1-215-415-00	s	METAL 560 1% 1/6W
R15	1-215-415-00	s	METAL 560 1% 1/6W
R16	1-215-442-00	s	METAL 7.5k 1% 1/4W
R17	1-215-373-31	s	METAL 10 1% 1/6W
R18	1-215-373-31	s	METAL 10 1% 1/6W
R19	1-215-373-31	s	METAL 10 1% 1/6W
R20	1-215-373-31	s	METAL 10 1% 1/6W
R21	1-215-373-31	s	METAL 10 1% 1/6W
R22	1-215-373-31	s	METAL 10 1% 1/6W
R23	1-215-409-00	s	METAL 330 1% 1/6W
R24	1-215-411-00	s	METAL 390 1% 1/6W
R25	1-215-411-00	s	METAL 390 1% 1/6W
R26	1-215-412-00	s	METAL 430 1% 1/6W
R27	1-215-412-00	s	METAL 430 1% 1/6W
R28	1-215-412-00	s	METAL 430 1% 1/6W
R29	1-215-412-00	s	METAL 430 1% 1/6W
R30	1-215-421-00	s	METAL 1k 1% 1/6W
R31	1-215-397-00	s	METAL 100 1% 1/6W
R32	1-215-405-00	s	METAL 220 1% 1/6W
R33	1-215-405-00	s	METAL 220 1% 1/6W
R34	1-215-421-00	s	METAL 1k 1% 1/6W
R35	1-215-421-00	s	METAL 1k 1% 1/6W
R36	1-215-413-00	s	METAL 470 1% 1/6W
R37	1-215-490-00	s	METAL 750k 1% 1/6W
R38	1-215-445-00	s	METAL 10k 1% 1/6W
R39	1-215-462-00	s	METAL 51k 1% 1/6W
R40	1-215-461-00	s	METAL 47k 1% 1/6W

NOTE : Please see page 22-42 for the parts that are not listed in the parts list.

(REC-09 BOARD(DVR-2000/2100))

Ref. No. or Q'ty	Part No.	SP	Description
R41	1-215-469-00	s	METAL 100k 1% 1/6W
R42	1-215-469-00	s	METAL 100k 1% 1/6W
R43	1-215-437-00	s	METAL 4.7k 1% 1/6W
R44	1-215-461-00	s	METAL 47k 1% 1/6W
R45	1-215-411-00	s	METAL 390 1% 1/6W
R46	1-215-411-00	s	METAL 390 1% 1/6W
R47	1-215-373-31	s	METAL 10 1% 1/6W
R48	1-215-373-31	s	METAL 10 1% 1/6W
R49	1-215-373-31	s	METAL 10 1% 1/6W
R50	1-215-373-31	s	METAL 10 1% 1/6W
R51	1-215-412-00	s	METAL 430 1% 1/6W
R52	1-215-412-00	s	METAL 430 1% 1/6W
R53	1-215-412-00	s	METAL 430 1% 1/6W
R54	1-215-412-00	s	METAL 430 1% 1/6W
R55	1-215-404-00	s	METAL 200 1% 1/6W
R56	1-215-404-00	s	METAL 200 1% 1/6W
R57	1-215-404-00	s	METAL 200 1% 1/6W
R58	1-215-404-00	s	METAL 200 1% 1/6W
R59	1-215-404-00	s	METAL 200 1% 1/6W
R60	1-215-407-00	s	METAL 270 1% 1/6W
R61	1-215-407-00	s	METAL 270 1% 1/6W
R62	1-215-407-00	s	METAL 270 1% 1/6W
R63	1-215-407-00	s	METAL 270 1% 1/6W
R64	1-215-461-00	s	METAL 47k 1% 1/6W
R65	1-215-412-00	s	METAL 430 1% 1/6W
R66	1-215-412-00	s	METAL 430 1% 1/6W
R67	1-215-412-00	s	METAL 430 1% 1/6W
R68	1-215-437-00	s	METAL 4.7k 1% 1/6W
R69	1-215-421-00	s	METAL 1k 1% 1/6W
R70	1-215-461-00	s	METAL 47k 1% 1/6W
R71	1-215-461-00	s	METAL 47k 1% 1/6W
RB1	1-235-005-00	s	RESISTOR BLOCK 47kx8
RB2	1-235-005-00	s	RESISTOR BLOCK 47kx8
RB3	1-235-005-00	s	RESISTOR BLOCK 47kx8
RB4	1-235-005-00	s	RESISTOR BLOCK 47kx8
RB5	1-235-005-00	s	RESISTOR BLOCK 47kx8
RB6	1-235-005-00	s	RESISTOR BLOCK 47kx8
RB7	1-235-005-00	s	RESISTOR BLOCK 47kx8
RB8	1-235-005-00	s	RESISTOR BLOCK 47kx8
RB9	1-235-005-00	s	RESISTOR BLOCK 47kx8
RB10	1-235-005-00	s	RESISTOR BLOCK 47kx8
RV1	1-228-458-00	s	RES, ADJ METAL 5k
X1	1-577-597-11	s	VCO, CRYSTAL 27.00000MHz
X2	1-577-590-11	s	VCO, CRYSTAL 12.28800MHz
X3	1-567-808-11	s	OSCILLATOR, CRYSTAL 19.67364MHz

NOTE : For the parts marked # in the parts list, refer to "Section 23 Changed Parts".

RF-23 BOARD/BOARD NO. 1-639-125-11(DVR-2000/2100)

Ref. No. or Q'ty	Part No.	SP	Description
BOARD NO. 1-639-125-11			
DVR-2100(J) : S/N 10001 thru 10199			
DVR-2100(UC): S/N 10001 thru 10199			
DVR-2100(EK): S/N 10001 thru 10099			
#1pc	A-6011-181-A	o	MOUNTED CIRCUIT BOARD, RF-23
4pcs	7-682-948-01	s	SCREW, +PSW 3x8
2pcs	3-673-249-11	o	LEVER, PC BOARD
2pcs	7-626-320-11	s	PIN, SPRING 3X8
6pcs	7-685-547-11	s	SCREW, +BVTP 3x10 TYPE2 N-S
1pc	3-171-894-01	o	LABEL (V), SERIAL NUMBER
C1	1-163-037-11	s	CERAMIC, CHIP 0.022uF 10% 25V
C2	1-163-037-11	s	CERAMIC, CHIP 0.022uF 10% 25V
C3	1-163-037-11	s	CERAMIC, CHIP 0.022uF 10% 25V
C4	1-163-037-11	s	CERAMIC, CHIP 0.022uF 10% 25V
C11	1-163-097-00	s	CERAMIC, CHIP 15pF 5% 50V
C12	1-163-097-00	s	CERAMIC, CHIP 15pF 5% 50V
C13	1-126-157-11	s	ELECT 10uF 20% 16V
C14	1-126-157-11	s	ELECT 10uF 20% 16V
C15	1-126-096-11	s	ELECT 10uF 20% 35V
C16	1-126-096-11	s	ELECT 10uF 20% 35V
C101	1-164-232-11	s	CERAMIC 0.01uF 10% 100V
C102	1-164-232-11	s	CERAMIC 0.01uF 10% 100V
C103	1-164-232-11	s	CERAMIC 0.01uF 10% 100V
C104	1-164-232-11	s	CERAMIC 0.01uF 10% 100V
C105	1-131-365-00	s	TANTALUM 10uF 10% 20V
C108	1-131-365-00	s	TANTALUM 10uF 10% 20V
C109	1-131-365-00	s	TANTALUM 10uF 10% 20V
C112	1-163-245-11	s	CERAMIC 56pF 5% 50V
C113	1-163-245-11	s	CERAMIC 56pF 5% 50V
C114	1-163-245-11	s	CERAMIC 56pF 5% 50V
C115	1-163-245-11	s	CERAMIC 56pF 5% 50V
C121	1-164-232-11	s	CERAMIC 0.01uF 10% 100V
C122	1-164-232-11	s	CERAMIC 0.01uF 10% 100V
C123	1-164-232-11	s	CERAMIC 0.01uF 10% 100V
C124	1-164-232-11	s	CERAMIC 0.01uF 10% 100V
C125	1-164-232-11	s	CERAMIC 0.01uF 10% 100V
C126	1-164-232-11	s	CERAMIC 0.01uF 10% 100V
C127	1-164-232-11	s	CERAMIC 0.01uF 10% 100V
C128	1-164-232-11	s	CERAMIC 0.01uF 10% 100V
C139	1-163-275-11	s	CERAMIC, CHIP 0.001uF 5% 50V
C140	1-163-275-11	s	CERAMIC, CHIP 0.001uF 5% 50V
C141	1-163-275-11	s	CERAMIC, CHIP 0.001uF 5% 50V
C142	1-163-275-11	s	CERAMIC, CHIP 0.001uF 5% 50V
C151	1-164-161-11	s	CERAMIC, CHIP 0.0022uF 10% 100V
C152	1-164-161-11	s	CERAMIC, CHIP 0.0022uF 10% 100V
C153	1-164-161-11	s	CERAMIC, CHIP 0.0022uF 10% 100V
C154	1-164-161-11	s	CERAMIC, CHIP 0.0022uF 10% 100V
C155	1-162-710-11	s	CERAMIC 100pF 1% 50V
C156	1-162-710-11	s	CERAMIC 100pF 1% 50V
C157	1-162-710-11	s	CERAMIC 100pF 1% 50V
C158	1-162-710-11	s	CERAMIC 100pF 1% 50V
C160	1-131-365-00	s	TANTALUM 10uF 10% 20V
C201	1-163-275-11	s	CERAMIC, CHIP 0.001uF 5% 50V
C202	1-163-275-11	s	CERAMIC, CHIP 0.001uF 5% 50V
C203	1-163-275-11	s	CERAMIC, CHIP 0.001uF 5% 50V
C204	1-163-275-11	s	CERAMIC, CHIP 0.001uF 5% 50V
C205	1-163-275-11	s	CERAMIC, CHIP 0.001uF 5% 50V
C206	1-163-275-11	s	CERAMIC, CHIP 0.001uF 5% 50V
C207	1-163-275-11	s	CERAMIC, CHIP 0.001uF 5% 50V

NOTE : Please see page 22-42 for the parts that are not listed in the parts list.

(RF-23 BOARD/BOARD NO. 1-639-125-11(DVR-2000/2100))

Ref. No. or Q'ty	Part No.	SP	Description
C208	1-163-275-11	s	CERAMIC, CHIP 0.001uF 5% 50V
C209	1-613-227-11	s	CERAMIC, CHIP 10pF 5% 50V
C210	1-613-227-11	s	CERAMIC, CHIP 10pF 5% 50V
C211	1-613-227-11	s	CERAMIC, CHIP 10pF 5% 50V
C212	1-613-227-11	s	CERAMIC, CHIP 10pF 5% 50V
C213	1-613-227-11	s	CERAMIC, CHIP 10pF 5% 50V
C214	1-613-227-11	s	CERAMIC, CHIP 10pF 5% 50V
C215	1-613-227-11	s	CERAMIC, CHIP 10pF 5% 50V
C216	1-613-227-11	s	CERAMIC, CHIP 10pF 5% 50V
C225	1-163-275-11	s	CERAMIC, CHIP 0.001uF 5% 50V
C226	1-163-275-11	s	CERAMIC, CHIP 0.001uF 5% 50V
C227	1-163-275-11	s	CERAMIC, CHIP 0.001uF 5% 50V
C228	1-163-275-11	s	CERAMIC, CHIP 0.001uF 5% 50V
C229	1-163-275-11	s	CERAMIC, CHIP 0.001uF 5% 50V
C230	1-163-275-11	s	CERAMIC, CHIP 0.001uF 5% 50V
C231	1-163-275-11	s	CERAMIC, CHIP 0.001uF 5% 50V
C232	1-163-275-11	s	CERAMIC, CHIP 0.001uF 5% 50V
C233	1-163-037-11	s	CERAMIC, CHIP 0.022uF 10% 25V
C234	1-163-037-11	s	CERAMIC, CHIP 0.022uF 10% 25V
C235	1-163-037-11	s	CERAMIC, CHIP 0.022uF 10% 25V
C236	1-163-037-11	s	CERAMIC, CHIP 0.022uF 10% 25V
C237	1-163-037-11	s	CERAMIC, CHIP 0.022uF 10% 25V
C238	1-163-037-11	s	CERAMIC, CHIP 0.022uF 10% 25V
C239	1-163-037-11	s	CERAMIC, CHIP 0.022uF 10% 25V
C240	1-163-037-11	s	CERAMIC, CHIP 0.022uF 10% 25V
C246	1-131-365-00	s	TANTALUM 10uF 10% 20V
C248	1-131-365-00	s	TANTALUM 10uF 10% 20V
C250	1-131-365-00	s	TANTALUM 10uF 10% 20V
C252	1-131-365-00	s	TANTALUM 10uF 10% 20V
C301	1-163-037-11	s	CERAMIC, CHIP 0.022uF 10% 25V
C302	1-163-037-11	s	CERAMIC, CHIP 0.022uF 10% 25V
C303	1-163-037-11	s	CERAMIC, CHIP 0.022uF 10% 25V
C304	1-163-037-11	s	CERAMIC, CHIP 0.022uF 10% 25V
C305	1-163-037-11	s	CERAMIC, CHIP 0.022uF 10% 25V
C306	1-163-037-11	s	CERAMIC, CHIP 0.022uF 10% 25V
C307	1-163-037-11	s	CERAMIC, CHIP 0.022uF 10% 25V
C308	1-163-037-11	s	CERAMIC, CHIP 0.022uF 10% 25V
C341	1-131-365-00	s	TANTALUM 10uF 10% 20V
C342	1-131-365-00	s	TANTALUM 10uF 10% 20V
C343	1-131-365-00	s	TANTALUM 10uF 10% 20V
C344	1-131-365-00	s	TANTALUM 10uF 10% 20V
C345	1-131-365-00	s	TANTALUM 10uF 10% 20V
C346	1-131-365-00	s	TANTALUM 10uF 10% 20V
C347	1-131-365-00	s	TANTALUM 10uF 10% 20V
C348	1-131-365-00	s	TANTALUM 10uF 10% 20V
C500	1-163-237-11	s	CERAMIC, CHIP 27pF 5% 50V
C502	1-164-004-11	s	CERAMIC, CHIP 0.1uF 10% 25V
C503	1-164-004-11	s	CERAMIC, CHIP 0.1uF 10% 25V
C504	1-163-229-11	s	CERAMIC, CHIP 12pF 5% 50V
C505	1-163-229-11	s	CERAMIC, CHIP 12pF 5% 50V
C510	1-163-237-11	s	CERAMIC, CHIP 27pF 5% 50V
C512	1-164-004-11	s	CERAMIC, CHIP 0.1uF 10% 25V
C513	1-164-004-11	s	CERAMIC, CHIP 0.1uF 10% 25V
C514	1-163-229-11	s	CERAMIC, CHIP 12pF 5% 50V
C515	1-163-229-11	s	CERAMIC, CHIP 12pF 5% 50V
C520	1-163-237-11	s	CERAMIC, CHIP 27pF 5% 50V
C522	1-164-004-11	s	CERAMIC, CHIP 0.1uF 10% 25V
C523	1-164-004-11	s	CERAMIC, CHIP 0.1uF 10% 25V
C524	1-163-229-11	s	CERAMIC, CHIP 12pF 5% 50V

NOTE : For the parts marked # in the parts list, refer to "Section 23 Changed Parts".

(RF-23 BOARD/BOARD NO. 1-639-125-11(DVR-2000/2100))

Ref. No. or Q'ty	Part No.	SP	Description
C525	1-163-229-11	s	CERAMIC, CHIP 12pF 5% 50V
C530	1-163-237-11	s	CERAMIC, CHIP 27pF 5% 50V
C532	1-164-004-11	s	CERAMIC, CHIP 0.1uF 10% 25V
C533	1-164-004-11	s	CERAMIC, CHIP 0.1uF 10% 25V
C534	1-163-229-11	s	CERAMIC, CHIP 12pF 5% 50V
C535	1-163-229-11	s	CERAMIC, CHIP 12pF 5% 50V
C540	1-163-237-11	s	CERAMIC, CHIP 27pF 5% 50V
C542	1-164-004-11	s	CERAMIC, CHIP 0.1uF 10% 25V
C543	1-164-004-11	s	CERAMIC, CHIP 0.1uF 10% 25V
C544	1-163-229-11	s	CERAMIC, CHIP 12pF 5% 50V
C545	1-163-229-11	s	CERAMIC, CHIP 12pF 5% 50V
C550	1-163-237-11	s	CERAMIC, CHIP 27pF 5% 50V
C552	1-164-004-11	s	CERAMIC, CHIP 0.1uF 10% 25V
C553	1-164-004-11	s	CERAMIC, CHIP 0.1uF 10% 25V
C554	1-163-229-11	s	CERAMIC, CHIP 12pF 5% 50V
C555	1-163-229-11	s	CERAMIC, CHIP 12pF 5% 50V
C560	1-163-237-11	s	CERAMIC, CHIP 27pF 5% 50V
C562	1-164-004-11	s	CERAMIC, CHIP 0.1uF 10% 25V
C563	1-164-004-11	s	CERAMIC, CHIP 0.1uF 10% 25V
C564	1-163-229-11	s	CERAMIC, CHIP 12pF 5% 50V
C565	1-163-229-11	s	CERAMIC, CHIP 12pF 5% 50V
C570	1-163-237-11	s	CERAMIC, CHIP 27pF 5% 50V
C572	1-164-004-11	s	CERAMIC, CHIP 0.1uF 10% 25V
C573	1-164-004-11	s	CERAMIC, CHIP 0.1uF 10% 25V
C574	1-163-229-11	s	CERAMIC, CHIP 12pF 5% 50V
C575	1-163-229-11	s	CERAMIC, CHIP 12pF 5% 50V
CN601	1-560-313-00	o	CONNECTOR, IL 8P, MALE
CN701	1-506-748-11	s	CONNECTOR, DIN 96P, MALE
CN702	1-506-746-11	s	CONNECTOR, DIN 48P, MALE
CN703	1-506-746-11	s	CONNECTOR, DIN 48P, MALE
CN728	1-506-627-11	o	CONNECTOR, PS 24P, MALE
CN729	1-506-627-11	o	CONNECTOR, PS 24P, MALE
CN730	1-506-623-11	o	CONNECTOR, PS 16P, MALE
CN731	1-506-477-21	o	CONNECTOR, 12P MALE
CN732	1-506-477-11	o	CONNECTOR, 12P, MALE
CN740	1-506-468-11	o	CONNECTOR, 3P, MALE
CN741	1-506-477-41	o	CONNECTOR, 12P MALE
CN742	1-561-365-21	s	CONNECTOR, COAXIAL, MALE
CN743	1-561-365-21	s	CONNECTOR, COAXIAL, MALE
CN744	1-561-365-21	s	CONNECTOR, COAXIAL, MALE
CN745	1-561-365-21	s	CONNECTOR, COAXIAL, MALE
CN746	1-561-365-21	s	CONNECTOR, COAXIAL, MALE
CN747	1-561-365-21	s	CONNECTOR, COAXIAL, MALE
CN748	1-561-365-21	s	CONNECTOR, COAXIAL, MALE
CN749	1-561-365-21	s	CONNECTOR, COAXIAL, MALE
CNI21	1-540-029-11	o	SOCKET, IC (PGA) 68P
CNI22	1-526-659-00	o	SOCKET, IC 28P
CNI26	1-526-656-00	s	SOCKET, IC (DP) 20P
CNI27	1-526-656-00	s	SOCKET, IC (DP) 20P
CNI35	1-526-655-00	s	SOCKET, IC (DP) 18P
CNI36	1-526-655-00	s	SOCKET, IC (DP) 18P
D11	8-719-911-19	s	DIODE 1SS119
D12	8-719-400-35	s	LED LN35BP, GRN
D13	8-719-400-35	s	LED LN35BP, GRN
D14	8-719-400-35	s	LED LN35BP, GRN
D15	8-719-400-35	s	LED LN35BP, GRN
D21	8-719-912-20	s	DIODE 1SS120

NOTE : Please see page 22-42 for the parts that are not listed in the parts list.

(RF-23 BOARD/BOARD NO. 1-639-125-11(DVR-2000/2100))

Ref. No. or Q'ty	Part No.	SP	Description
D22	8-719-912-20	s	DIODE 1SS120
D23	8-719-912-20	s	DIODE 1SS120
D24	8-719-912-20	s	DIODE 1SS120
D25	8-719-912-20	s	DIODE 1SS120
D26	8-719-912-20	s	DIODE 1SS120
IC1	8-752-057-14	s	IC CXA1626Q
IC2	8-752-057-14	s	IC CXA1626Q
IC3	8-752-057-16	s	IC CXA1628Q
IC4	8-752-057-16	s	IC CXA1628Q
IC5	8-752-057-16	s	IC CXA1628Q
IC6	8-752-057-16	s	IC CXA1628Q
IC7	8-752-057-15	s	IC CXA1627Q
IC8	8-752-057-15	s	IC CXA1627Q
IC9	8-752-057-15	s	IC CXA1627Q
IC10	8-752-057-15	s	IC CXA1627Q
IC11	8-752-057-16	s	IC CXA1628Q
IC12	8-752-057-16	s	IC CXA1628Q
IC13	8-759-112-53	s	IC UPC1663G
IC14	8-759-112-53	s	IC UPC1663G
IC15	8-759-112-53	s	IC UPC1663G
IC16	8-759-112-53	s	IC UPC1663G
IC17	8-759-009-06	s	IC MC14052BF
IC18	8-759-908-92	s	IC TL084CNS
IC19	8-759-908-92	s	IC TL084CNS
IC20	8-759-908-92	s	IC TL084CNS
IC21	8-759-154-64	s	IC UPD70208R-10
IC22	---PENDING--	s	IC 27C512-RF2301-0102, EPROM
IC23	8-752-337-75	s	IC CXK58257AM-70LL
IC24	8-759-938-68	s	IC CXD1095Q
IC25	8-795-926-80	s	IC SN74HC573BNS
IC26	8-759-065-26	s	IC 16V8-RF2302-2, PLD
IC27	8-759-065-27	s	IC 16V8-RF2303-3, PLD
IC28	8-759-925-76	s	IC SN74HC08NS
IC29	8-759-926-49	s	IC SN74HC245NS
IC30	8-759-926-49	s	IC SN74HC245NS
IC31	8-759-926-49	s	IC SN74HC245NS
IC32	8-759-947-86	s	IC CXD1317Q
IC33	8-759-908-92	s	IC TL084CNS
IC34	8-759-908-92	s	IC TL084CNS
IC35	8-759-914-41	s	IC X2212P
IC36	8-759-914-41	s	IC X2212P
IC37	8-759-927-46	s	IC SN74HC00NS
IC38	8-795-926-80	s	IC SN74HC573BNS
L1	1-421-329-00	s	COIL, CHOKE
L2	1-421-329-00	s	COIL, CHOKE
L3	1-421-329-00	s	COIL, CHOKE
L4	1-421-329-00	s	COIL, CHOKE
L5	1-410-312-11	s	INDUCTOR 0.22UH
L6	1-410-312-11	s	INDUCTOR 0.22UH
LV1	1-410-745-11	s	INDUCTOR, VARIABLE
LV2	1-410-745-11	s	INDUCTOR, VARIABLE
LV3	1-410-745-11	s	INDUCTOR, VARIABLE
LV4	1-410-745-11	s	INDUCTOR, VARIABLE
LV5	1-410-745-11	s	INDUCTOR, VARIABLE
LV6	1-410-745-11	s	INDUCTOR, VARIABLE
LV7	1-410-745-11	s	INDUCTOR, VARIABLE
LV8	1-410-745-11	s	INDUCTOR, VARIABLE

NOTE : For the parts marked # in the parts list, refer to "Section 23 Changed Parts".

(RF-23 BOARD/BOARD NO. 1-639-125-11(DVR-2000/2100))

Ref. No. or Q'ty	Part No.	SP	Description
Q1	8-729-122-63	s	TRANSISTOR 2SA1226-E4
Q2	8-729-122-63	s	TRANSISTOR 2SA1226-E4
Q3	8-729-122-63	s	TRANSISTOR 2SA1226-E4
Q4	8-729-122-63	s	TRANSISTOR 2SA1226-E4
Q17	8-729-271-32	s	TRANSISTOR 2SC2713-L
Q20	8-729-101-11	s	TRANSISTOR 2SC2351-R2
Q21	8-729-101-11	s	TRANSISTOR 2SC2351-R2
Q22	8-729-101-11	s	TRANSISTOR 2SC2351-R2
Q23	8-729-101-11	s	TRANSISTOR 2SC2351-R2
Q24	8-729-101-11	s	TRANSISTOR 2SC2351-R2
Q25	8-729-101-11	s	TRANSISTOR 2SC2351-R2
Q26	8-729-101-11	s	TRANSISTOR 2SC2351-R2
Q27	8-729-101-11	s	TRANSISTOR 2SC2351-R2
Q28	8-729-101-11	s	TRANSISTOR 2SC2351-R2
Q29	8-729-101-11	s	TRANSISTOR 2SC2351-R2
Q30	8-729-101-11	s	TRANSISTOR 2SC2351-R2
Q31	8-729-101-11	s	TRANSISTOR 2SC2351-R2
Q32	8-729-101-11	s	TRANSISTOR 2SC2351-R2
Q33	8-729-101-11	s	TRANSISTOR 2SC2351-R2
Q34	8-729-101-11	s	TRANSISTOR 2SC2351-R2
Q35	8-729-101-11	s	TRANSISTOR 2SC2351-R2
RB1	1-235-452-11	s	RESISTOR BLOCK 330x4
RB2	1-235-452-11	s	RESISTOR BLOCK 330x4
RB3	1-235-452-11	s	RESISTOR BLOCK 330x4
RB4	1-235-452-11	s	RESISTOR BLOCK 330x4
RB5	1-235-452-11	s	RESISTOR BLOCK 330x4
RB6	1-235-452-11	s	RESISTOR BLOCK 330x4
RB7	1-235-452-11	s	RESISTOR BLOCK 330x4
RB8	1-235-452-11	s	RESISTOR BLOCK 330x4
RB11	1-231-501-00	s	RESISTOR BLOCK 470x4
RB12	1-231-410-00	s	RESISTOR BLOCK 10kx8
RV1	1-228-459-00	s	RES, ADJ, METAL 10k
RV2	1-228-459-00	s	RES, ADJ, METAL 10k
RV3	1-228-459-00	s	RES, ADJ, METAL 10k
RV4	1-228-459-00	s	RES, ADJ, METAL 10k
RV5	1-228-459-00	s	RES, ADJ, METAL 10k
RV6	1-228-459-00	s	RES, ADJ, METAL 10k
RV7	1-228-459-00	s	RES, ADJ, METAL 10k
RV8	1-228-459-00	s	RES, ADJ, METAL 10k
RV9	1-228-462-00	s	RES, ADJ, METAL 100k
RV10	1-228-462-00	s	RES, ADJ, METAL 100k
RV11	1-228-462-00	s	RES, ADJ, METAL 100k
RV12	1-228-462-00	s	RES, ADJ, METAL 100k
RV13	1-228-462-00	s	RES, ADJ, METAL 100k
RV14	1-228-462-00	s	RES, ADJ, METAL 100k
RV15	1-228-462-00	s	RES, ADJ, METAL 100k
RV16	1-228-462-00	s	RES, ADJ, METAL 100k
RV17	1-228-456-00	s	RES, ADJ, METAL 1k
RV18	1-228-456-00	s	RES, ADJ, METAL 1k
RV19	1-228-456-00	s	RES, ADJ, METAL 1k
RV20	1-228-456-00	s	RES, ADJ, METAL 1k
S11	1-553-856-00	s	SWITCH, TACTILE
S12	1-570-728-11	s	SWITCH, DIP 8-CKT
X11	1-577-110-11	s	CRYSTAL 20MHz

NOTE : Please see page 22-42 for the parts that are not listed in the parts list.

RF-23 BOARD/BOARD NO. 1-639-125-12/-13(DVR-2000/2100)

Ref. No. or Q'ty	Part No.	SP	Description
BOARD NO. 1-639-125-12/-13			
DVR-2000(J) : S/N 10001 thru 10199			
DVR-2000(UC): S/N 10001 thru 10399			
DVR-2000(EK): S/N 10001 thru 10799			
DVR-2100(J) : S/N 10201 thru 10999			
DVR-2100(UC): S/N 10201 thru 11099			
DVR-2100(EK): S/N 10101 thru 11099			
#1pc	A-6011-181-B	o	MOUNTED CIRCUIT BOARD, RF-23
1pc	3-171-894-01	o	LABEL (V), SERIAL NUMBER
2pcs	3-673-249-11	o	LEVER, PC BOARD
2pcs	7-626-320-11	s	PIN, SPRING 3X8
4pcs	7-682-948-01	s	SCREW, +PSW 3x8
6pcs	7-685-547-11	s	SCREW, +BVTP 3x10 TYPE2 N-S
C1	1-163-037-11	s	CERAMIC, CHIP 0.022uF 10% 25V
C2	1-163-037-11	s	CERAMIC, CHIP 0.022uF 10% 25V
C3	1-163-037-11	s	CERAMIC, CHIP 0.022uF 10% 25V
C4	1-163-037-11	s	CERAMIC, CHIP 0.022uF 10% 25V
C11	1-163-097-00	s	CERAMIC, CHIP 15pF 5% 50V
C12	1-163-097-00	s	CERAMIC, CHIP 15pF 5% 50V
C13	1-126-157-11	s	ELECT 10uF 20% 16V
C14	1-126-157-11	s	ELECT 10uF 20% 16V
C15	1-126-096-11	s	ELECT 10uF 20% 35V
C16	1-126-096-11	s	ELECT 10uF 20% 35V
C101	1-164-232-11	s	CERAMIC 0.01uF 10% 100V
C102	1-164-232-11	s	CERAMIC 0.01uF 10% 100V
C103	1-164-232-11	s	CERAMIC 0.01uF 10% 100V
C104	1-164-232-11	s	CERAMIC 0.01uF 10% 100V
C105	1-131-365-00	s	TANTALUM 10uF 10% 20V
C108	1-131-365-00	s	TANTALUM 10uF 10% 20V
C109	1-131-365-00	s	TANTALUM 10uF 10% 20V
#C112	1-163-239-11	s	CERAMIC, CHIP 33pF 5% 50V
#C113	1-163-239-11	s	CERAMIC, CHIP 33pF 5% 50V
#C114	1-163-239-11	s	CERAMIC, CHIP 33pF 5% 50V
#C115	1-163-239-11	s	CERAMIC, CHIP 33pF 5% 50V
C121	1-164-004-11	s	CERAMIC, CHIP 0.1uF 10% 25V
C122	1-164-004-11	s	CERAMIC, CHIP 0.1uF 10% 25V
C123	1-164-004-11	s	CERAMIC, CHIP 0.1uF 10% 25V
C124	1-164-004-11	s	CERAMIC, CHIP 0.1uF 10% 25V
C125	1-164-004-11	s	CERAMIC, CHIP 0.1uF 10% 25V
C126	1-164-004-11	s	CERAMIC, CHIP 0.1uF 10% 25V
C127	1-164-004-11	s	CERAMIC, CHIP 0.1uF 10% 25V
C128	1-164-004-11	s	CERAMIC, CHIP 0.1uF 10% 25V
C139	1-163-275-11	s	CERAMIC, CHIP 0.001uF 5% 50V
C140	1-163-275-11	s	CERAMIC, CHIP 0.001uF 5% 50V
C141	1-163-275-11	s	CERAMIC, CHIP 0.001uF 5% 50V
C142	1-163-275-11	s	CERAMIC, CHIP 0.001uF 5% 50V
C151	1-163-275-11	s	CERAMIC, CHIP 0.001uF 5% 50V
C152	1-163-275-11	s	CERAMIC, CHIP 0.001uF 5% 50V
C153	1-163-275-11	s	CERAMIC, CHIP 0.001uF 5% 50V
C154	1-163-275-11	s	CERAMIC, CHIP 0.001uF 5% 50V
C160	1-131-365-00	s	TANTALUM 10uF 10% 20V
#C162	1-163-085-00	s	CERAMIC, CHIP 2pF 50V
#C163	1-163-085-00	s	CERAMIC, CHIP 2pF 50V
#C164	1-163-085-00	s	CERAMIC, CHIP 2pF 50V
#C165	1-163-085-00	s	CERAMIC, CHIP 2pF 50V
C201	1-163-275-11	s	CERAMIC, CHIP 0.001uF 5% 50V
C202	1-163-275-11	s	CERAMIC, CHIP 0.001uF 5% 50V
C203	1-163-275-11	s	CERAMIC, CHIP 0.001uF 5% 50V
C204	1-163-275-11	s	CERAMIC, CHIP 0.001uF 5% 50V

NOTE : For the parts marked # in the parts list, refer to "Section 23 Changed Parts".

(RF-23 BOARD/BOARD NO. 1-639-125-12/-13(DVR-2000/2100))

Ref. No. or Q'ty	Part No.	SP	Description
C205	1-163-275-11	s	CERAMIC, CHIP 0.001uF 5% 50V
C206	1-163-275-11	s	CERAMIC, CHIP 0.001uF 5% 50V
C207	1-163-275-11	s	CERAMIC, CHIP 0.001uF 5% 50V
C208	1-163-275-11	s	CERAMIC, CHIP 0.001uF 5% 50V
C209	1-163-091-00	s	CERAMIC, CHIP 8pF 50V
C210	1-163-091-00	s	CERAMIC, CHIP 8pF 50V
C211	1-163-091-00	s	CERAMIC, CHIP 8pF 50V
C212	1-163-091-00	s	CERAMIC, CHIP 8pF 50V
C213	1-163-091-00	s	CERAMIC, CHIP 8pF 50V
C214	1-163-091-00	s	CERAMIC, CHIP 8pF 50V
C215	1-163-091-00	s	CERAMIC, CHIP 8pF 50V
C216	1-163-091-00	s	CERAMIC, CHIP 8pF 50V
C225	1-163-275-11	s	CERAMIC, CHIP 0.001uF 5% 50V
C226	1-163-275-11	s	CERAMIC, CHIP 0.001uF 5% 50V
C227	1-163-275-11	s	CERAMIC, CHIP 0.001uF 5% 50V
C228	1-163-275-11	s	CERAMIC, CHIP 0.001uF 5% 50V
C229	1-163-275-11	s	CERAMIC, CHIP 0.001uF 5% 50V
C230	1-163-275-11	s	CERAMIC, CHIP 0.001uF 5% 50V
C231	1-163-275-11	s	CERAMIC, CHIP 0.001uF 5% 50V
C232	1-163-275-11	s	CERAMIC, CHIP 0.001uF 5% 50V
C233	1-163-017-00	s	CERAMIC, CHIP 0.0047uF 5% 50V
C234	1-163-017-00	s	CERAMIC, CHIP 0.0047uF 5% 50V
C235	1-163-017-00	s	CERAMIC, CHIP 0.0047uF 5% 50V
C236	1-163-017-00	s	CERAMIC, CHIP 0.0047uF 5% 50V
C237	1-163-017-00	s	CERAMIC, CHIP 0.0047uF 5% 50V
C238	1-163-017-00	s	CERAMIC, CHIP 0.0047uF 5% 50V
C239	1-163-017-00	s	CERAMIC, CHIP 0.0047uF 5% 50V
C240	1-163-017-00	s	CERAMIC, CHIP 0.0047uF 5% 50V
C246	1-131-365-00	s	TANTALUM 10uF 10% 20V
C248	1-131-365-00	s	TANTALUM 10uF 10% 20V
C250	1-131-365-00	s	TANTALUM 10uF 10% 20V
C252	1-131-365-00	s	TANTALUM 10uF 10% 20V
C301	1-163-037-11	s	CERAMIC, CHIP 0.022uF 10% 25V
C302	1-163-037-11	s	CERAMIC, CHIP 0.022uF 10% 25V
C303	1-163-037-11	s	CERAMIC, CHIP 0.022uF 10% 25V
C304	1-163-037-11	s	CERAMIC, CHIP 0.022uF 10% 25V
C305	1-163-037-11	s	CERAMIC, CHIP 0.022uF 10% 25V
C306	1-163-037-11	s	CERAMIC, CHIP 0.022uF 10% 25V
C307	1-163-037-11	s	CERAMIC, CHIP 0.022uF 10% 25V
C308	1-163-037-11	s	CERAMIC, CHIP 0.022uF 10% 25V
C341	1-131-365-00	s	TANTALUM 10uF 10% 20V
C342	1-131-365-00	s	TANTALUM 10uF 10% 20V
C343	1-131-365-00	s	TANTALUM 10uF 10% 20V
C344	1-131-365-00	s	TANTALUM 10uF 10% 20V
C345	1-131-365-00	s	TANTALUM 10uF 10% 20V
C346	1-131-365-00	s	TANTALUM 10uF 10% 20V
C347	1-131-365-00	s	TANTALUM 10uF 10% 20V
C348	1-131-365-00	s	TANTALUM 10uF 10% 20V
C500	1-163-237-11	s	CERAMIC, CHIP 27pF 5% 50V
C502	1-164-004-11	s	CERAMIC, CHIP 0.1uF 10% 25V
C503	1-164-004-11	s	CERAMIC, CHIP 0.1uF 10% 25V
C504	1-163-229-11	s	CERAMIC, CHIP 12pF 5% 50V
C505	1-163-229-11	s	CERAMIC, CHIP 12pF 5% 50V
C510	1-163-237-11	s	CERAMIC, CHIP 27pF 5% 50V
C512	1-164-004-11	s	CERAMIC, CHIP 0.1uF 10% 25V
C513	1-164-004-11	s	CERAMIC, CHIP 0.1uF 10% 25V
C514	1-163-229-11	s	CERAMIC, CHIP 12pF 5% 50V
C515	1-163-229-11	s	CERAMIC, CHIP 12pF 5% 50V
C520	1-163-237-11	s	CERAMIC, CHIP 27pF 5% 50V

NOTE : Please see page 22-42 for the parts that are not listed in the parts list.

(RF-23 BOARD/BOARD NO. 1-639-125-12/-13(DVR-2000/2100))

Ref. No. or Q'ty	Part No.	SP	Description
C522	1-164-004-11	s	CERAMIC, CHIP 0.1uF 10% 25V
C523	1-164-004-11	s	CERAMIC, CHIP 0.1uF 10% 25V
C524	1-163-229-11	s	CERAMIC, CHIP 12pF 5% 50V
C525	1-163-229-11	s	CERAMIC, CHIP 12pF 5% 50V
C530	1-163-237-11	s	CERAMIC, CHIP 27pF 5% 50V
C532	1-164-004-11	s	CERAMIC, CHIP 0.1uF 10% 25V
C533	1-164-004-11	s	CERAMIC, CHIP 0.1uF 10% 25V
C534	1-163-229-11	s	CERAMIC, CHIP 12pF 5% 50V
C535	1-163-229-11	s	CERAMIC, CHIP 12pF 5% 50V
C540	1-163-237-11	s	CERAMIC, CHIP 27pF 5% 50V
C542	1-164-004-11	s	CERAMIC, CHIP 0.1uF 10% 25V
C543	1-164-004-11	s	CERAMIC, CHIP 0.1uF 10% 25V
C544	1-163-229-11	s	CERAMIC, CHIP 12pF 5% 50V
C545	1-163-229-11	s	CERAMIC, CHIP 12pF 5% 50V
C550	1-163-237-11	s	CERAMIC, CHIP 27pF 5% 50V
C552	1-164-004-11	s	CERAMIC, CHIP 0.1uF 10% 25V
C553	1-164-004-11	s	CERAMIC, CHIP 0.1uF 10% 25V
C554	1-163-229-11	s	CERAMIC, CHIP 12pF 5% 50V
C555	1-163-229-11	s	CERAMIC, CHIP 12pF 5% 50V
C560	1-163-237-11	s	CERAMIC, CHIP 27pF 5% 50V
C562	1-164-004-11	s	CERAMIC, CHIP 0.1uF 10% 25V
C563	1-164-004-11	s	CERAMIC, CHIP 0.1uF 10% 25V
C564	1-163-229-11	s	CERAMIC, CHIP 12pF 5% 50V
C565	1-163-229-11	s	CERAMIC, CHIP 12pF 5% 50V
C570	1-163-237-11	s	CERAMIC, CHIP 27pF 5% 50V
C572	1-164-004-11	s	CERAMIC, CHIP 0.1uF 10% 25V
C573	1-164-004-11	s	CERAMIC, CHIP 0.1uF 10% 25V
C574	1-163-229-11	s	CERAMIC, CHIP 12pF 5% 50V
C575	1-163-229-11	s	CERAMIC, CHIP 12pF 5% 50V
CN601	1-560-313-00	o	CONNECTOR, IL 8P, MALE
CN701	1-506-748-11	s	CONNECTOR, DIN 96P, MALE
CN702	1-506-746-11	s	CONNECTOR, DIN 48P, MALE
CN703	1-506-746-11	s	CONNECTOR, DIN 48P, MALE
CN728	1-506-627-11	o	CONNECTOR, PS 24P, MALE
CN729	1-506-627-11	o	CONNECTOR, PS 24P, MALE
CN730	1-506-623-11	o	CONNECTOR, PS 16P, MALE
CN731	1-506-477-21	o	CONNECTOR, 12P, MALE
CN732	1-506-477-11	o	CONNECTOR 12P, MALE
CN740	1-506-468-11	o	CONNECTOR 3P, MALE
CN741	1-506-477-41	o	CONNECTOR, 12P, MALE
CN742	1-561-365-21	s	CONNECTOR, COAXIAL, MALE
CN743	1-561-365-21	s	CONNECTOR, COAXIAL, MALE
CN744	1-561-365-21	s	CONNECTOR, COAXIAL, MALE
CN745	1-561-365-21	s	CONNECTOR, COAXIAL, MALE
CN746	1-561-365-21	s	CONNECTOR, COAXIAL, MALE
CN747	1-561-365-21	s	CONNECTOR, COAXIAL, MALE
CN748	1-561-365-21	s	CONNECTOR, COAXIAL, MALE
CN749	1-561-365-21	s	CONNECTOR, COAXIAL, MALE
CNI21	1-540-029-11	o	SOCKET, IC (PGA) 68P
CNI22	1-526-659-00	o	SOCKET, IC 28P
CNI26	1-526-656-00	s	SOCKET, IC (DP) 20P
CNI27	1-526-656-00	s	SOCKET, IC (DP) 20P
CNI35	1-526-655-00	s	SOCKET, IC (DP) 18P
CNI36	1-526-655-00	s	SOCKET, IC (DP) 18P
#D11	8-719-800-76	s	DIODE 1SS226
D12	8-719-400-35	s	LED LN35BP, GRN
D13	8-719-400-35	s	LED LN35BP, GRN
D14	8-719-400-35	s	LED LN35BP, GRN

NOTE : For the parts marked # in the parts list, refer to "Section 23 Changed Parts".

(RF-23 BOARD/BOARD NO. 1-639-125-12/-13(DVR-2000/2100))

Ref. No. or Q'ty	Part No.	SP	Description
D15	8-719-400-35	s	LED LN35BP, GRN
D101	8-719-105-57	s	DIODE RD3.9M-T1B
IC1	8-752-057-14	s	IC CXA1626Q
IC2	8-752-057-14	s	IC CXA1626Q
IC3	8-752-057-16	s	IC CXA1628Q
IC4	8-752-057-16	s	IC CXA1628Q
IC5	8-752-057-16	s	IC CXA1628Q
IC6	8-752-057-16	s	IC CXA1628Q
IC7	8-752-057-15	s	IC CXA1627Q
IC8	8-752-057-15	s	IC CXA1627Q
IC9	8-752-057-15	s	IC CXA1627Q
IC10	8-752-057-15	s	IC CXA1627Q
IC11	8-752-057-16	s	IC CXA1628Q
IC12	8-752-057-16	s	IC CXA1628Q
IC17	8-759-009-06	s	IC MC14052BF
IC18	8-759-908-92	s	IC TL084CNS
IC19	8-759-908-92	s	IC TL084CNS
IC20	8-759-908-92	s	IC TL084CNS
IC21	8-759-154-64	s	IC UPD70208R-10
IC22	8-759-074-82	s	IC 27C512-RF2301-0106, EPROM
IC23	8-759-053-67	s	IC MB84256A-70LLPF
IC24	8-759-938-68	s	IC CXD1095Q
IC25	8-795-926-80	s	IC SN74HC573BNS
IC26	8-759-065-26	s	IC 16V8-RF2302-2, PLD
IC27	8-759-065-27	s	IC 16V8-RF2303-3, PLD
IC28	8-759-925-76	s	IC SN74HC08NS
IC29	8-759-926-49	s	IC SN74HC245NS
IC30	8-759-926-49	s	IC SN74HC245NS
IC31	8-759-926-49	s	IC SN74HC245NS
IC32	8-759-947-86	s	IC CXD1317Q
IC33	8-759-908-92	s	IC TL084CNS
IC34	8-759-908-92	s	IC TL084CNS
IC35	8-759-942-11	s	IC MBM2212-20P, NOVRAM
IC36	8-759-942-11	s	IC MBM2212-20P, NOVRAM
IC37	8-759-927-46	s	IC SN74HC00NS
IC38	8-795-926-80	s	IC SN74HC573BNS
L1	1-421-329-00	s	COIL, CHOKE
L2	1-421-329-00	s	COIL, CHOKE
L3	1-421-329-00	s	COIL, CHOKE
L4	1-421-329-00	s	COIL, CHOKE
L5	1-408-876-00	s	INDUCTOR 0.18 5%
L6	1-408-876-00	s	INDUCTOR 0.18 5%
LV1	1-410-745-11	s	VARIABLE INDUCTOR
LV2	1-410-745-11	s	VARIABLE INDUCTOR
LV3	1-410-745-11	s	VARIABLE INDUCTOR
LV4	1-410-745-11	s	VARIABLE INDUCTOR
LV5	1-410-745-11	s	VARIABLE INDUCTOR
LV6	1-410-745-11	s	VARIABLE INDUCTOR
LV7	1-410-745-11	s	VARIABLE INDUCTOR
LV8	1-410-745-11	s	VARIABLE INDUCTOR
Q17	8-729-271-32	s	TRANSISTOR 2SC1622A-D17
Q20	8-729-101-11	s	TRANSISTOR 2SC2351-R2
Q21	8-729-101-11	s	TRANSISTOR 2SC2351-R2
Q22	8-729-101-11	s	TRANSISTOR 2SC2351-R2
Q23	8-729-101-11	s	TRANSISTOR 2SC2351-R2
Q24	8-729-101-11	s	TRANSISTOR 2SC2351-R2
Q25	8-729-101-11	s	TRANSISTOR 2SC2351-R2

NOTE : Please see page 22-42 for the parts that are not listed in the parts list.

(RF-23 BOARD/BOARD NO. 1-639-125-12/-13(DVR-2000/2100))

Ref. No. or Q'ty	Part No.	SP	Description
Q26	8-729-101-11	s	TRANSISTOR 2SC2351-R2
Q27	8-729-101-11	s	TRANSISTOR 2SC2351-R2
Q28	8-729-101-11	s	TRANSISTOR 2SC2351-R2
Q29	8-729-101-11	s	TRANSISTOR 2SC2351-R2
Q30	8-729-101-11	s	TRANSISTOR 2SC2351-R2
Q31	8-729-101-11	s	TRANSISTOR 2SC2351-R2
Q32	8-729-101-11	s	TRANSISTOR 2SC2351-R2
Q33	8-729-101-11	s	TRANSISTOR 2SC2351-R2
Q34	8-729-101-11	s	TRANSISTOR 2SC2351-R2
Q35	8-729-101-11	s	TRANSISTOR 2SC2351-R2
Q36	8-729-101-11	s	TRANSISTOR 2SC2351-R2
Q37	8-729-101-11	s	TRANSISTOR 2SC2351-R2
Q38	8-729-101-11	s	TRANSISTOR 2SC2351-R2
Q39	8-729-101-11	s	TRANSISTOR 2SC2351-R2
Q40	8-729-101-11	s	TRANSISTOR 2SC2351-R2
Q41	8-729-101-11	s	TRANSISTOR 2SC2351-R2
Q42	8-729-101-11	s	TRANSISTOR 2SC2351-R2
Q43	8-729-101-11	s	TRANSISTOR 2SC2351-R2
Q44	8-729-101-11	s	TRANSISTOR 2SC2351-R2
Q45	8-729-101-11	s	TRANSISTOR 2SC2351-R2
Q46	8-729-101-11	s	TRANSISTOR 2SC2351-R2
Q47	8-729-101-11	s	TRANSISTOR 2SC2351-R2
Q48	8-729-101-11	s	TRANSISTOR 2SC2351-R2
Q49	8-729-101-11	s	TRANSISTOR 2SC2351-R2
Q50	8-729-101-11	s	TRANSISTOR 2SC2351-R2
Q51	8-729-101-11	s	TRANSISTOR 2SC2351-R2
R601	1-249-389-11	s	CARBON 4.7 5% 1/4W
R602	1-249-389-11	s	CARBON 4.7 5% 1/4W
R603	1-249-389-11	s	CARBON 4.7 5% 1/4W
R604	1-249-389-11	s	CARBON 4.7 5% 1/4W
R605	1-249-389-11	s	CARBON 4.7 5% 1/4W
R606	1-249-389-11	s	CARBON 4.7 5% 1/4W
RB1	1-235-452-11	s	RESISTOR BLOCK 330x4
RB2	1-235-452-11	s	RESISTOR BLOCK 330x4
RB3	1-235-452-11	s	RESISTOR BLOCK 330x4
RB4	1-235-452-11	s	RESISTOR BLOCK 330x4
RB5	1-235-452-11	s	RESISTOR BLOCK 330x4
RB6	1-235-452-11	s	RESISTOR BLOCK 330x4
RB7	1-235-452-11	s	RESISTOR BLOCK 330x4
RB8	1-235-452-11	s	RESISTOR BLOCK 330x4
RB11	1-231-501-00	s	RESISTOR BLOCK 470x4
RB12	1-231-410-00	s	RESISTOR BLOCK 10kx8
RV1	1-228-459-00	s	RES, ADJ METAL 10k
RV2	1-228-459-00	s	RES, ADJ METAL 10k
RV3	1-228-459-00	s	RES, ADJ METAL 10k
RV4	1-228-459-00	s	RES, ADJ METAL 10k
RV5	1-228-459-00	s	RES, ADJ METAL 10k
RV6	1-228-459-00	s	RES, ADJ METAL 10k
RV7	1-228-459-00	s	RES, ADJ METAL 10k
RV8	1-228-459-00	s	RES, ADJ METAL 10k
RV9	1-228-462-00	s	RES, ADJ METAL 100k
RV10	1-228-462-00	s	RES, ADJ METAL 100k
RV11	1-228-462-00	s	RES, ADJ METAL 100k
RV12	1-228-462-00	s	RES, ADJ METAL 100k
RV13	1-228-462-00	s	RES, ADJ METAL 100k
RV14	1-228-462-00	s	RES, ADJ METAL 100k
RV15	1-228-462-00	s	RES, ADJ METAL 100k

NOTE : For the parts marked # in the parts list, refer to "Section 23 Changed Parts".

(RF-23 BOARD/BOARD NO. 1-639-125-12/-13(DVR-2000/2100))

Ref. No. or Q'ty	Part No.	SP	Description
RV16	1-228-462-00	s	RES, ADJ METAL 100k
#RV17	1-228-455-00	s	RES, ADJ METAL 500
#RV18	1-228-455-00	s	RES, ADJ METAL 500
#RV19	1-228-455-00	s	RES, ADJ METAL 500
#RV20	1-228-455-00	s	RES, ADJ METAL 500
S11	1-553-856-00	s	SWITCH, TACTILE
S12	1-570-728-11	s	SWITCH, DIP
X11	1-577-110-11	s	CRYSTAL 20MHz

NOTE : Please see page 22-42 for the parts that are not listed in the parts list.

RF-23 BOARD/BOARD NO. 1-639-125-14/-15(DVR-2000/2100)

Ref. No. or Q'ty	Part No.	SP	Description
BOARD No. 1-639-125-14/-15			
DVR-2000(J) : S/N 10001 and higher			
DVR-2000(UC): S/N 10001 and higher			
DVR-2000(EK): S/N 10001 and higher			
DVR-2100(J) : S/N 10001 and higher			
DVR-2100(UC): S/N 10001 and higher			
DVR-2100(EK): S/N 10001 and higher			
#1pc	A-8271-761-B	o	MOUNTED CIRCUIT BOARD, RF-23
1pc	3-171-894-01	o	LABEL (V), SERIAL NUMBER
2pcs	3-673-249-11	o	LEVER, PC BOARD
2pcs	7-626-320-11	s	PIN, SPRING 3X8
4pcs	7-682-948-01	s	SCREW, +PSW 3x8
6pcs	7-685-547-14	s	SCREW, +BVTP 3x10 TYPE2 N-S
C1	1-163-037-11	s	CERAMIC, CHIP 0.022uF 10% 25V
C2	1-163-037-11	s	CERAMIC, CHIP 0.022uF 10% 25V
C3	1-163-037-11	s	CERAMIC, CHIP 0.022uF 10% 25V
C4	1-163-037-11	s	CERAMIC, CHIP 0.022uF 10% 25V
C5	1-104-665-11	s	ELECT 100uF 20% 25V
C6	1-104-665-11	s	ELECT 100uF 20% 25V
C7	1-104-665-11	s	ELECT 100uF 20% 25V
C8	1-104-665-11	s	ELECT 100uF 20% 25V
#C11	1-163-231-11	s	CERAMIC, CHIP 15PF 5% 50V
#C12	1-163-231-11	s	CERAMIC, CHIP 15PF 5% 50V
C13	1-126-157-11	s	ELECT 10uF 20% 16V
C14	1-126-157-11	s	ELECT 10uF 20% 16V
C15	1-126-096-11	s	ELECT 10uF 20% 35V
C16	1-126-096-11	s	ELECT 10uF 20% 35V
C29	1-164-004-11	s	CERAMIC, CHIP 0.1uF 10% 25V
C30	1-164-004-11	s	CERAMIC, CHIP 0.1uF 10% 25V
C101	1-164-232-11	s	CERAMIC, CHIP 0.01uF 10% 100V
C102	1-164-232-11	s	CERAMIC, CHIP 0.01uF 10% 100V
C103	1-164-232-11	s	CERAMIC, CHIP 0.01uF 10% 100V
C104	1-164-232-11	s	CERAMIC, CHIP 0.01uF 10% 100V
C105	1-131-353-00	s	TANTALUM 10uF 10% 35V
C108	1-131-353-00	s	TANTALUM 10uF 10% 35V
C109	1-131-353-00	s	TANTALUM 10uF 10% 35V
C112	1-163-239-11	s	CERAMIC, CHIP 33pF 5% 50V
C113	1-163-239-11	s	CERAMIC, CHIP 33pF 5% 50V
C114	1-163-239-11	s	CERAMIC, CHIP 33pF 5% 50V
C115	1-163-239-11	s	CERAMIC, CHIP 33pF 5% 50V
C121	1-164-004-11	s	CERAMIC, CHIP 0.1uF 10% 25V
C122	1-164-004-11	s	CERAMIC, CHIP 0.1uF 10% 25V
C123	1-164-004-11	s	CERAMIC, CHIP 0.1uF 10% 25V
C124	1-164-004-11	s	CERAMIC, CHIP 0.1uF 10% 25V
C125	1-164-004-11	s	CERAMIC, CHIP 0.1uF 10% 25V
C126	1-164-004-11	s	CERAMIC, CHIP 0.1uF 10% 25V
C127	1-164-004-11	s	CERAMIC, CHIP 0.1uF 10% 25V
C128	1-164-004-11	s	CERAMIC, CHIP 0.1uF 10% 25V
C139	1-163-275-11	s	CERAMIC, CHIP 0.001uF 5% 50V
C140	1-163-275-11	s	CERAMIC, CHIP 0.001uF 5% 50V
C141	1-163-275-11	s	CERAMIC, CHIP 0.001uF 5% 50V
C142	1-163-275-11	s	CERAMIC, CHIP 0.001uF 5% 50V
C151	1-163-275-11	s	CERAMIC, CHIP 0.001uF 5% 50V
C152	1-163-275-11	s	CERAMIC, CHIP 0.001uF 5% 50V
C153	1-163-275-11	s	CERAMIC, CHIP 0.001uF 5% 50V
C154	1-163-275-11	s	CERAMIC, CHIP 0.001uF 5% 50V
C160	1-131-353-00	s	TANTALUM 10uF 10% 35V
C162	1-163-085-00	s	CERAMIC, CHIP 2pF 50V

NOTE : For the parts marked # in the parts list, refer to "Section 23 Changed Parts".

(RF-23 BOARD/BOARD NO. 1-639-125-14/-15(DVR-2000/2100))

Ref. No. or Q'ty	Part No.	SP	Description
C163	1-163-085-00	s	CERAMIC, CHIP 2pF 50V
C164	1-163-085-00	s	CERAMIC, CHIP 2pF 50V
C165	1-163-085-00	s	CERAMIC, CHIP 2pF 50V
C201	1-163-275-11	s	CERAMIC, CHIP 0.001uF 5% 50V
C202	1-163-275-11	s	CERAMIC, CHIP 0.001uF 5% 50V
C203	1-163-275-11	s	CERAMIC, CHIP 0.001uF 5% 50V
C204	1-163-275-11	s	CERAMIC, CHIP 0.001uF 5% 50V
C205	1-163-275-11	s	CERAMIC, CHIP 0.001uF 5% 50V
C206	1-163-275-11	s	CERAMIC, CHIP 0.001uF 5% 50V
C207	1-163-275-11	s	CERAMIC, CHIP 0.001uF 5% 50V
C208	1-163-275-11	s	CERAMIC, CHIP 0.001uF 5% 50V
C209	1-163-089-00	s	CERAMIC, CHIP 6pF 50V
C210	1-163-089-00	s	CERAMIC, CHIP 6pF 50V
C211	1-163-089-00	s	CERAMIC, CHIP 6pF 50V
C212	1-163-089-00	s	CERAMIC, CHIP 6pF 50V
C213	1-163-089-00	s	CERAMIC, CHIP 6pF 50V
C214	1-163-089-00	s	CERAMIC, CHIP 6pF 50V
C215	1-163-089-00	s	CERAMIC, CHIP 6pF 50V
C216	1-163-089-00	s	CERAMIC, CHIP 6pF 50V
C225	1-163-275-11	s	CERAMIC, CHIP 0.001uF 5% 50V
C226	1-163-275-11	s	CERAMIC, CHIP 0.001uF 5% 50V
C227	1-163-275-11	s	CERAMIC, CHIP 0.001uF 5% 50V
C228	1-163-275-11	s	CERAMIC, CHIP 0.001uF 5% 50V
C229	1-163-275-11	s	CERAMIC, CHIP 0.001uF 5% 50V
C230	1-163-275-11	s	CERAMIC, CHIP 0.001uF 5% 50V
C231	1-163-275-11	s	CERAMIC, CHIP 0.001uF 5% 50V
C232	1-163-275-11	s	CERAMIC, CHIP 0.001uF 5% 50V
C233	1-163-017-00	s	CERAMIC, CHIP 0.0047uF 5% 50V
C234	1-163-017-00	s	CERAMIC, CHIP 0.0047uF 5% 50V
C235	1-163-017-00	s	CERAMIC, CHIP 0.0047uF 5% 50V
C236	1-163-017-00	s	CERAMIC, CHIP 0.0047uF 5% 50V
C237	1-163-017-00	s	CERAMIC, CHIP 0.0047uF 5% 50V
C238	1-163-017-00	s	CERAMIC, CHIP 0.0047uF 5% 50V
C239	1-163-017-00	s	CERAMIC, CHIP 0.0047uF 5% 50V
C240	1-163-017-00	s	CERAMIC, CHIP 0.0047uF 5% 50V
C246	1-131-353-00	s	TANTALUM 10uF 10% 35V
C248	1-131-353-00	s	TANTALUM 10uF 10% 35V
C250	1-131-353-00	s	TANTALUM 10uF 10% 35V
C252	1-131-365-00	s	TANTALUM 10uF 10% 35V
C301	1-163-037-11	s	CERAMIC, CHIP 0.022uF 10% 25V
C302	1-163-037-11	s	CERAMIC, CHIP 0.022uF 10% 25V
C303	1-163-037-11	s	CERAMIC, CHIP 0.022uF 10% 25V
C304	1-163-037-11	s	CERAMIC, CHIP 0.022uF 10% 25V
C305	1-163-037-11	s	CERAMIC, CHIP 0.022uF 10% 25V
C306	1-163-037-11	s	CERAMIC, CHIP 0.022uF 10% 25V
C307	1-163-037-11	s	CERAMIC, CHIP 0.022uF 10% 25V
C308	1-163-037-11	s	CERAMIC, CHIP 0.022uF 10% 25V
C341	1-131-353-00	s	TANTALUM 10uF 10% 35V
C342	1-131-353-00	s	TANTALUM 10uF 10% 35V
C343	1-131-353-00	s	TANTALUM 10uF 10% 35V
C344	1-131-353-00	s	TANTALUM 10uF 10% 35V
C345	1-131-353-00	s	TANTALUM 10uF 10% 35V
C346	1-131-353-00	s	TANTALUM 10uF 10% 35V
C347	1-131-353-00	s	TANTALUM 10uF 10% 35V
C348	1-131-353-00	s	TANTALUM 10uF 10% 35V
C500	1-163-227-11	s	CERAMIC, CHIP 10pF 5% 50V
C501	1-163-245-11	s	CERAMIC, CHIP 56pF 5% 50V
C502	1-164-004-11	s	CERAMIC, CHIP 0.1uF 10% 25V
C503	1-164-004-11	s	CERAMIC, CHIP 0.1uF 10% 25V
C504	1-163-091-00	s	CERAMIC, CHIP 8pF 50V

NOTE : Please see page 22-42 for the parts that are not listed in the parts list.

(RF-23 BOARD/BOARD NO. 1-639-125-14/-15(DVR-2000/2100))

Ref. No. or Q'ty	Part No.	SP	Description
C505	1-163-091-00	s	CERAMIC, CHIP 8pF 50V
C506	1-163-241-11	s	CERAMIC, CHIP 39pF 5% 50V
C507	1-163-241-11	s	CERAMIC, CHIP 39pF 5% 50V
C510	1-163-227-11	s	CERAMIC, CHIP 10pF 5% 50V
C511	1-163-245-11	s	CERAMIC, CHIP 56pF 5% 50V
C512	1-164-004-11	s	CERAMIC, CHIP 0.1uF 10% 25V
C513	1-164-004-11	s	CERAMIC, CHIP 0.1uF 10% 25V
C514	1-163-091-00	s	CERAMIC, CHIP 8pF 50V
C515	1-163-091-00	s	CERAMIC, CHIP 8pF 50V
C516	1-163-241-11	s	CERAMIC, CHIP 39pF 5% 50V
C517	1-163-241-11	s	CERAMIC, CHIP 39pF 5% 50V
C520	1-163-227-11	s	CERAMIC, CHIP 10pF 5% 50V
C521	1-163-245-11	s	CERAMIC, CHIP 56pF 5% 50V
C522	1-164-004-11	s	CERAMIC, CHIP 0.1uF 10% 25V
C523	1-164-004-11	s	CERAMIC, CHIP 0.1uF 10% 25V
C524	1-163-091-00	s	CERAMIC, CHIP 8pF 50V
C525	1-163-091-00	s	CERAMIC, CHIP 8pF 50V
C526	1-163-241-11	s	CERAMIC, CHIP 39pF 5% 50V
C527	1-163-241-11	s	CERAMIC, CHIP 39pF 5% 50V
C530	1-163-227-11	s	CERAMIC, CHIP 10pF 5% 50V
C531	1-163-245-11	s	CERAMIC, CHIP 56pF 5% 50V
C532	1-164-004-11	s	CERAMIC, CHIP 0.1uF 10% 25V
C533	1-164-004-11	s	CERAMIC, CHIP 0.1uF 10% 25V
C534	1-163-091-00	s	CERAMIC, CHIP 8pF 50V
C535	1-163-091-00	s	CERAMIC, CHIP 8pF 50V
C536	1-163-241-11	s	CERAMIC, CHIP 39pF 5% 50V
C537	1-163-241-11	s	CERAMIC, CHIP 39pF 5% 50V
C540	1-163-227-11	s	CERAMIC, CHIP 10pF 5% 50V
C541	1-163-245-11	s	CERAMIC, CHIP 56pF 5% 50V
C542	1-164-004-11	s	CERAMIC, CHIP 0.1uF 10% 25V
C543	1-164-004-11	s	CERAMIC, CHIP 0.1uF 10% 25V
C544	1-163-091-00	s	CERAMIC, CHIP 8pF 50V
C545	1-163-091-00	s	CERAMIC, CHIP 8pF 50V
C546	1-163-241-11	s	CERAMIC, CHIP 39pF 5% 50V
C547	1-163-241-11	s	CERAMIC, CHIP 39pF 5% 50V
C550	1-163-227-11	s	CERAMIC, CHIP 10pF 5% 50V
C551	1-163-245-11	s	CERAMIC, CHIP 56pF 5% 50V
C552	1-164-004-11	s	CERAMIC, CHIP 0.1uF 10% 25V
C553	1-164-004-11	s	CERAMIC, CHIP 0.1uF 10% 25V
C554	1-163-091-00	s	CERAMIC, CHIP 8pF 50V
C555	1-163-091-00	s	CERAMIC, CHIP 8pF 50V
C556	1-163-241-11	s	CERAMIC, CHIP 39pF 5% 50V
C557	1-163-241-11	s	CERAMIC, CHIP 39pF 5% 50V
C560	1-163-227-11	s	CERAMIC, CHIP 10pF 5% 50V
C561	1-163-245-11	s	CERAMIC, CHIP 56pF 5% 50V
C562	1-164-004-11	s	CERAMIC, CHIP 0.1uF 10% 25V
C563	1-164-004-11	s	CERAMIC, CHIP 0.1uF 10% 25V
C564	1-163-091-00	s	CERAMIC, CHIP 8pF 50V
C565	1-163-091-00	s	CERAMIC, CHIP 8pF 50V
C566	1-163-241-11	s	CERAMIC, CHIP 39pF 5% 50V
C567	1-163-241-11	s	CERAMIC, CHIP 39pF 5% 50V
C570	1-163-227-11	s	CERAMIC, CHIP 10pF 5% 50V
C571	1-163-245-11	s	CERAMIC, CHIP 56pF 5% 50V
C572	1-164-004-11	s	CERAMIC, CHIP 0.1uF 10% 25V
C573	1-164-004-11	s	CERAMIC, CHIP 0.1uF 10% 25V
C574	1-163-091-00	s	CERAMIC, CHIP 8pF 50V
C575	1-163-091-00	s	CERAMIC, CHIP 8pF 50V
C576	1-163-241-11	s	CERAMIC, CHIP 39pF 5% 50V
C577	1-163-241-11	s	CERAMIC, CHIP 39pF 5% 50V

NOTE : For the parts marked # in the parts list, refer to "Section 23 Changed Parts".

(RF-23 BOARD/BOARD NO. 1-639-125-14/-15(DVR-2000/2100))

Ref. No. or Q'ty	Part No.	SP	Description
CN601	1-560-313-00	o	CONNECTOR, IL 8P, MALE
CN701	1-506-748-11	s	CONNECTOR, DIN 96P, MALE
CN702	1-506-746-11	s	CONNECTOR, DIN 48P, MALE
CN703	1-506-746-11	s	CONNECTOR, DIN 48P, MALE
CN728	1-506-627-11	o	CONNECTOR, PS 24P, MALE
CN729	1-506-627-11	o	CONNECTOR, PS 24P, MALE
CN730	1-506-623-11	o	CONNECTOR, PS 16P, MALE
CN731	1-506-477-21	o	CONNECTOR, 12P, MALE
CN732	1-506-477-11	o	CONNECTOR, 12P, MALE
CN740	1-506-468-11	o	CONNECTOR, 3P, MALE
CN741	1-506-477-41	o	CONNECTOR, 12P, MALE
CNI21	1-540-080-11	s	SOCKET, IC (IC113) 68P
CNI22	1-526-659-00	o	SOCKET, IC 28P
CV1	1-141-260-00	s	CAP, TRIMMER 50PF
CV2	1-141-260-00	s	CAP, TRIMMER 50PF
CV3	1-141-260-00	s	CAP, TRIMMER 50PF
CV4	1-141-260-00	s	CAP, TRIMMER 50PF
CV5	1-141-260-00	s	CAP, TRIMMER 50PF
CV6	1-141-260-00	s	CAP, TRIMMER 50PF
CV7	1-141-260-00	s	CAP, TRIMMER 50PF
CV8	1-141-260-00	s	CAP, TRIMMER 50PF
D11	8-719-800-76	s	DIODE 1SS226
D12	8-719-400-35	s	LED LN35BP, GRN
D13	8-719-400-35	s	LED LN35BP, GRN
D14	8-719-400-35	s	LED LN35BP, GRN
D15	8-719-400-35	s	LED LN35BP, GRN
D101	8-719-105-57	s	DIODE RD3.9M-B1
IC1	8-752-057-14	s	IC CXA1626Q
IC2	8-752-057-14	s	IC CXA1626Q
IC3	8-752-057-16	s	IC CXA1628Q
IC4	8-752-057-16	s	IC CXA1628Q
IC5	8-752-057-16	s	IC CXA1628Q
IC6	8-752-057-16	s	IC CXA1628Q
IC7	8-752-057-15	s	IC CXA1627Q
IC8	8-752-057-15	s	IC CXA1627Q
IC9	8-752-057-15	s	IC CXA1627Q
IC10	8-752-057-15	s	IC CXA1627Q
IC11	8-752-057-16	s	IC CXA1628Q
IC12	8-752-057-16	s	IC CXA1628Q
IC17	8-759-009-06	s	IC MC14052BF
IC18	8-759-908-92	s	IC TL084CNS
IC19	8-759-908-92	s	IC TL084CNS
IC20	8-759-908-92	s	IC TL084CNS
IC21	8-759-141-73	s	IC UPD70208L-8
IC22	8-759-389-09	o	IC 27C512-RF2301-1211, EPROM
IC23	8-759-367-23	s	IC TC55257CFL-70L
IC24	8-759-938-68	s	IC CXD1095Q
IC25	8-759-926-80	s	IC SN74HC573NS
IC26	8-759-186-96	o	IC 16V8-RF2302-3, PLD
IC27	8-759-186-97	o	IC 16V8-RF2303-4, PLD
IC28	8-759-925-76	s	IC SN74HC08NS
IC29	8-759-926-49	s	IC SN74HC245NS
IC30	8-759-926-49	s	IC SN74HC245NS
IC31	8-759-926-49	s	IC SN74HC245NS
IC32	8-759-113-55	s	IC UPD71054GB
IC33	8-759-239-55	s	IC TC74HC123AF
IC35	8-759-369-72	s	IC S-22S12I10, NOVRAM

NOTE : Please see page 22-42 for the parts that are not listed in the parts list.

(RF-23 BOARD/BOARD NO. 1-639-125-14/-15(DVR-2000/2100))

Ref. No. or Q'ty	Part No.	SP	Description
IC36	8-759-369-72	s	IC S-22S12I10, NOVRAM
IC37	8-759-927-46	s	IC SN74HC00NS
IC38	8-759-926-80	s	IC SN74HC573NS
#IC40	8-759-009-07	s	IC MC14053BF
#IC41	8-759-009-07	s	IC MC14053BF
#IC42	8-759-300-71	s	IC MC14053BF
L1	1-421-329-00	s	COIL, CHOKE
L2	1-421-329-00	s	COIL, CHOKE
L3	1-421-329-00	s	COIL, CHOKE
L4	1-421-329-00	s	COIL, CHOKE
L5	1-408-876-00	s	INDUCTOR 0.18 5%
L6	1-408-876-00	s	INDUCTOR 0.18 5%
L7	1-414-138-11	s	INDUCTOR 0.33uH
L8	1-414-138-11	s	INDUCTOR 0.33uH
L9	1-414-138-11	s	INDUCTOR 0.33uH
L10	1-414-138-11	s	INDUCTOR 0.33uH
L11	1-414-138-11	s	INDUCTOR 0.33uH
L12	1-414-138-11	s	INDUCTOR 0.33uH
L13	1-414-138-11	s	INDUCTOR 0.33uH
L14	1-414-138-11	s	INDUCTOR 0.33uH
LV1	1-410-744-12	s	VAR INDUCTOR, 0.68uH
LV2	1-410-744-12	s	VAR INDUCTOR, 0.68uH
LV3	1-410-744-12	s	VAR INDUCTOR, 0.68uH
LV4	1-410-744-12	s	VAR INDUCTOR, 0.68uH
LV5	1-410-744-12	s	VAR INDUCTOR, 0.68uH
LV6	1-410-744-12	s	VAR INDUCTOR, 0.68uH
LV7	1-410-744-12	s	VAR INDUCTOR, 0.68uH
LV8	1-410-744-12	s	VAR INDUCTOR, 0.68uH
Q17	8-729-271-32	s	TRANSISTOR 2SC1622A-D17
Q20	8-729-101-11	s	TRANSISTOR 2SC2351-R2
Q21	8-729-101-11	s	TRANSISTOR 2SC2351-R2
Q22	8-729-101-11	s	TRANSISTOR 2SC2351-R2
Q23	8-729-101-11	s	TRANSISTOR 2SC2351-R2
Q24	8-729-101-11	s	TRANSISTOR 2SC2351-R2
Q25	8-729-101-11	s	TRANSISTOR 2SC2351-R2
Q26	8-729-101-11	s	TRANSISTOR 2SC2351-R2
Q27	8-729-101-11	s	TRANSISTOR 2SC2351-R2
Q28	8-729-101-11	s	TRANSISTOR 2SC2351-R2
Q29	8-729-101-11	s	TRANSISTOR 2SC2351-R2
Q30	8-729-101-11	s	TRANSISTOR 2SC2351-R2
Q31	8-729-101-11	s	TRANSISTOR 2SC2351-R2
Q32	8-729-101-11	s	TRANSISTOR 2SC2351-R2
Q33	8-729-101-11	s	TRANSISTOR 2SC2351-R2
Q34	8-729-101-11	s	TRANSISTOR 2SC2351-R2
Q35	8-729-101-11	s	TRANSISTOR 2SC2351-R2
Q36	8-729-101-11	s	TRANSISTOR 2SC2351-R2
Q37	8-729-101-11	s	TRANSISTOR 2SC2351-R2
Q38	8-729-101-11	s	TRANSISTOR 2SC2351-R2
Q39	8-729-101-11	s	TRANSISTOR 2SC2351-R2
Q40	8-729-101-11	s	TRANSISTOR 2SC2351-R2
Q41	8-729-101-11	s	TRANSISTOR 2SC2351-R2
Q42	8-729-101-11	s	TRANSISTOR 2SC2351-R2
Q43	8-729-101-11	s	TRANSISTOR 2SC2351-R2
Q44	8-729-101-11	s	TRANSISTOR 2SC2351-R2
Q45	8-729-101-11	s	TRANSISTOR 2SC2351-R2
Q46	8-729-101-11	s	TRANSISTOR 2SC2351-R2
Q47	8-729-101-11	s	TRANSISTOR 2SC2351-R2
Q48	8-729-101-11	s	TRANSISTOR 2SC2351-R2

NOTE : For the parts marked # in the parts list, refer to "Section 23 Changed Parts".

(RF-23 BOARD/BOARD NO. 1-639-125-14/-15(DVR-2000/2100))

Ref. No. or Q'ty	Part No.	SP	Description
Q49	8-729-101-11	s	TRANSISTOR 2SC2351-R2
Q50	8-729-101-11	s	TRANSISTOR 2SC2351-R2
Q51	8-729-101-11	s	TRANSISTOR 2SC2351-R2
R1	1-216-073-00	s	METAL, CHIP 10k 5% 1/10W
R11	1-216-073-00	s	METAL, CHIP 10k 5% 1/10W
R12	1-216-073-00	s	METAL, CHIP 10k 5% 1/10W
R13	1-216-073-00	s	METAL, CHIP 10k 5% 1/10W
R14	1-216-073-00	s	METAL, CHIP 10k 5% 1/10W
R15	1-216-073-00	s	METAL, CHIP 10k 5% 1/10W
R16	1-216-073-00	s	METAL, CHIP 10k 5% 1/10W
R17	1-216-073-00	s	METAL, CHIP 10k 5% 1/10W
R18	1-216-073-00	s	METAL, CHIP 10k 5% 1/10W
R19	1-216-073-00	s	METAL, CHIP 10k 5% 1/10W
R69	1-216-073-00	s	METAL, CHIP 10k 5% 1/10W
R70	1-216-073-00	s	METAL, CHIP 10k 5% 1/10W
R71	1-216-073-00	s	METAL, CHIP 10k 5% 1/10W
R72	1-216-073-00	s	METAL, CHIP 10k 5% 1/10W
R73	1-216-073-00	s	METAL, CHIP 10k 5% 1/10W
R74	1-216-073-00	s	METAL, CHIP 10k 5% 1/10W
R75	1-216-073-00	s	METAL, CHIP 10k 5% 1/10W
R76	1-216-073-00	s	METAL, CHIP 10k 5% 1/10W
R77	1-216-073-00	s	METAL, CHIP 10k 5% 1/10W
R167	1-216-073-00	s	METAL, CHIP 10k 5% 1/10W
R168	1-216-073-00	s	METAL, CHIP 10k 5% 1/10W
R169	1-216-073-00	s	METAL, CHIP 10k 5% 1/10W
R170	1-216-073-00	s	METAL, CHIP 10k 5% 1/10W
R409	1-216-073-00	s	METAL, CHIP 10k 5% 1/10W
R410	1-216-073-00	s	METAL, CHIP 10k 5% 1/10W
R411	1-216-073-00	s	METAL, CHIP 10k 5% 1/10W
R412	1-216-073-00	s	METAL, CHIP 10k 5% 1/10W
R413	1-216-073-00	s	METAL, CHIP 10k 5% 1/10W
R414	1-216-073-00	s	METAL, CHIP 10k 5% 1/10W
R415	1-216-073-00	s	METAL, CHIP 10k 5% 1/10W
R416	1-216-073-00	s	METAL, CHIP 10k 5% 1/10W
R601	1-249-389-11	s	CARBON 4.7 5% 1/4W
R602	1-249-389-11	s	CARBON 4.7 5% 1/4W
R603	1-249-389-11	s	CARBON 4.7 5% 1/4W
R604	1-249-389-11	s	CARBON 4.7 5% 1/4W
R605	1-249-389-11	s	CARBON 4.7 5% 1/4W
R606	1-249-389-11	s	CARBON 4.7 5% 1/4W
RB1	1-235-452-11	s	RESISTOR BLOCK 330x4
RB2	1-235-452-11	s	RESISTOR BLOCK 330x4
RB3	1-235-452-11	s	RESISTOR BLOCK 330x4
RB4	1-235-452-11	s	RESISTOR BLOCK 330x4
RB5	1-235-452-11	s	RESISTOR BLOCK 330x4
RB6	1-235-452-11	s	RESISTOR BLOCK 330x4
RB7	1-235-452-11	s	RESISTOR BLOCK 330x4
RB8	1-235-452-11	s	RESISTOR BLOCK 330x4
RB11	1-231-501-00	s	RESISTOR BLOCK 470x4
RB12	1-231-410-00	s	RESISTOR BLOCK 10kx8
RV1	1-228-459-00	s	RES, ADJ METAL 10k
RV2	1-228-459-00	s	RES, ADJ METAL 10k
RV3	1-228-459-00	s	RES, ADJ METAL 10k
RV4	1-228-459-00	s	RES, ADJ METAL 10k
RV5	1-228-459-00	s	RES, ADJ METAL 10k
RV6	1-228-459-00	s	RES, ADJ METAL 10k
RV7	1-228-459-00	s	RES, ADJ METAL 10k
RV8	1-228-459-00	s	RES, ADJ METAL 10k
RV9	1-228-462-00	s	RES, ADJ METAL 100k

NOTE : Please see page 22-42 for the parts that are not listed in the parts list.

(RF-23 BOARD/BOARD NO. 1-639-125-14/-15(DVR-2000/2100))

Ref. No. or Q'ty	Part No.	SP	Description
RV10	1-228-462-00	s	RES, ADJ METAL 100k
RV11	1-228-462-00	s	RES, ADJ METAL 100k
RV12	1-228-462-00	s	RES, ADJ METAL 100k
RV13	1-228-462-00	s	RES, ADJ METAL 100k
RV14	1-228-462-00	s	RES, ADJ METAL 100k
RV15	1-228-462-00	s	RES, ADJ METAL 100k
RV16	1-228-462-00	s	RES, ADJ METAL 100k
RV17	1-228-455-00	s	RES, ADJ METAL 500
RV18	1-228-455-00	s	RES, ADJ METAL 500
RV19	1-228-455-00	s	RES, ADJ METAL 500
RV20	1-228-455-00	s	RES, ADJ METAL 500
S11	1-553-856-00	s	SWITCH, TACTILE
S12	1-570-728-11	s	SWITCH, DIP
X11	1-577-076-11	s	CRYSTAL, 16.000MHz

NOTE : For the parts marked # in the parts list, refer to "Section 23 Changed Parts".

SE-144 BOARD(DVR-2000/2100)

Ref. No. or Q'ty	Part No.	SP	Description
1pc	A-6025-184-A	o	MOUNTED CIRCUIT BOARD, SE-144
2pcs	7-685-547-14	s	SCREW, +BVTP 3x10 TYPE2 N-S
C1	1-126-796-11	s	ELECT 22uF 20% 25V
#C2	1-126-786-11	s	ELECT 47uF 20% 16V
#C3	1-126-785-11	s	ELECT 47uF 20% 16V
C4	1-162-814-11	s	CERAMIC 0.47uF 10% 50V
C5	1-162-814-11	s	CERAMIC 0.47uF 10% 50V
C6	1-162-814-11	s	CERAMIC 0.47uF 10% 50V
C7	1-162-814-11	s	CERAMIC 0.47uF 10% 50V
C8	1-162-814-11	s	CERAMIC 0.47uF 10% 50V
C9	1-162-814-11	s	CERAMIC 0.47uF 10% 50V
C10	1-162-814-11	s	CERAMIC 0.47uF 10% 50V
C11	1-162-814-11	s	CERAMIC 0.47uF 10% 50V
C12	1-162-814-11	s	CERAMIC 0.47uF 10% 50V
C13	1-162-814-11	s	CERAMIC 0.47uF 10% 50V
C14	1-162-814-11	s	CERAMIC 0.47uF 10% 50V
C15	1-162-814-11	s	CERAMIC 0.47uF 10% 50V
C16	1-162-814-11	s	CERAMIC 0.47uF 10% 50V
C17	1-162-814-11	s	CERAMIC 0.47uF 10% 50V
C18	1-162-814-11	s	CERAMIC 0.47uF 10% 50V
C19	1-162-814-11	s	CERAMIC 0.47uF 10% 50V
C20	1-162-667-11	s	CERAMIC 10pF 5% 50V
C21	1-162-667-11	s	CERAMIC 10pF 5% 50V
#C22	1-126-785-11	s	ELECT 47uF 20% 16V
#C23	1-126-785-11	s	ELECT 47uF 20% 16V
#C24	1-126-786-11	s	ELECT 47uF 20% 16V
#C25	1-126-786-11	s	ELECT 47uF 20% 16V
#C26	1-126-786-11	s	ELECT 47uF 20% 16V
#C27	1-126-786-11	s	ELECT 47uF 20% 16V
#C28	1-126-785-11	s	ELECT 47uF 20% 16V
#C29	1-124-785-11	s	ELECT 47uF 20% 16V
C30	1-163-809-11	s	CERAMIC, CHIP 0.047uF 10% 25V
C31	1-163-037-11	s	CERAMIC, CHIP 0.022uF 10% 25V
C32	1-163-037-11	s	CERAMIC, CHIP 0.022uF 10% 25V
C33	1-163-037-11	s	CERAMIC, CHIP 0.022uF 10% 25V
C34	1-163-011-11	s	CERAMIC 0.0015uF 10% 50V
C35	1-164-161-11	s	CERAMIC, CHIP 0.0022uF 10% 100V
C36	1-164-161-11	s	CERAMIC, CHIP 0.0022uF 10% 100V
C37	1-163-011-11	s	CERAMIC 0.0015uF 10% 50V
C38	1-164-161-11	s	CERAMIC, CHIP 0.0022uF 10% 100V
C39	1-163-037-11	s	CERAMIC, CHIP 0.022uF 10% 25V
C40	1-164-161-11	s	CERAMIC, CHIP 0.0022uF 10% 100V
C41	1-163-275-11	s	CERAMIC, CHIP 0.001uF 5% 50V
C42	1-164-161-11	s	CERAMIC, CHIP 0.0022uF 10% 100V
C43	1-164-161-11	s	CERAMIC, CHIP 0.0022uF 10% 100V
C44	1-163-263-11	s	CERAMIC, CHIP 330pF 5% 50V
C45	1-163-275-11	s	CERAMIC, CHIP 0.001uF 5% 50V
C46	1-163-037-11	s	CERAMIC, CHIP 0.022uF 10% 25V
C47	1-164-161-11	s	CERAMIC, CHIP 0.0022uF 10% 100V
C48	1-164-161-11	s	CERAMIC, CHIP 0.0022uF 10% 100V
C49	1-163-037-11	s	CERAMIC, CHIP 0.022uF 10% 25V
C50	1-163-263-11	s	CERAMIC, CHIP 330pF 5% 50V
C51	1-163-037-11	s	CERAMIC, CHIP 0.022uF 10% 25V
C52	1-163-037-11	s	CERAMIC, CHIP 0.022uF 10% 25V
C53	1-163-037-11	s	CERAMIC, CHIP 0.022uF 10% 25V
C54	1-163-037-11	s	CERAMIC, CHIP 0.022uF 10% 25V
C55	1-163-037-11	s	CERAMIC, CHIP 0.022uF 10% 25V
C56	1-163-037-11	s	CERAMIC, CHIP 0.022uF 10% 25V

NOTE : Please see page 22-42 for the parts that are not listed in the parts list.

(SE-144 BOARD(DVR-2000/2100))

Ref. No. or Q'ty	Part No.	SP	Description
C57	1-163-037-11	s	CERAMIC, CHIP 0.022uF 10% 25V
C58	1-163-037-11	s	CERAMIC, CHIP 0.022uF 10% 25V
C59	1-163-037-11	s	CERAMIC, CHIP 0.022uF 10% 25V
C60	1-163-037-11	s	CERAMIC, CHIP 0.022uF 10% 25V
C61	1-163-037-11	s	CERAMIC, CHIP 0.022uF 10% 25V
C62	1-163-037-11	s	CERAMIC, CHIP 0.022uF 10% 25V
C63	1-163-037-11	s	CERAMIC, CHIP 0.022uF 10% 25V
C64	1-163-037-11	s	CERAMIC, CHIP 0.022uF 10% 25V
CN356	1-506-639-11	o	CONNECTOR, PS 20P, MALE
CN727	1-506-746-11	s	CONNECTOR, DIN 48P, MALE
CN738	1-564-001-11	o	CONNECTOR 2P, MALE
CN739	1-506-632-11	o	CONNECTOR, PS 6P, MALE
CN741	1-565-689-11	o	CONNECTOR, TX 60P, MALE
CNI16	1-540-080-11	s	SOCKET, IC (IC113) 68P
D1	8-719-200-02	s	DIODE 10E2
D2	8-719-200-02	s	DIODE 10E2
D3	8-719-200-02	s	DIODE 10E2
D4	8-719-948-47	s	DIODE HSM88AS
D5	8-719-948-47	s	DIODE HSM88AS
D6	8-719-941-23	s	DIODE DA204U
D7	8-719-941-23	s	DIODE DA204U
D8	8-719-941-23	s	DIODE DA204U
D9	8-719-948-47	s	DIODE HSM88AS
D10	8-719-941-23	s	DIODE DA204U
D11	8-719-941-23	s	DIODE DA204U
D12	8-719-941-23	s	DIODE DA204U
D13	8-719-948-47	s	DIODE HSM88AS
F1	⚠ 1-532-776-21	s	FUSE 1A 125V
IC1	8-759-510-71	s	IC BA10358F-E2
#IC2	8-759-983-69	s	IC LM358PS
#IC3	8-759-983-69	s	IC LM358PS
IC4	8-759-100-95	s	IC UPC324G2
IC5	8-759-510-71	s	IC BA10358F-E2
IC6	8-759-510-71	s	IC BA10358F-E2
IC7	8-759-994-67	s	IC MB86022PF
IC8	8-759-925-80	s	IC SN74HC14NS
IC9	8-759-925-80	s	IC SN74HC14NS
#IC10	8-759-983-74	s	IC LM324NS
#IC11	8-759-009-07	s	IC MC14053BF
#IC12	8-759-009-07	s	IC MC14053BF
IC13	8-759-926-12	s	IC SN74HC139NS
IC14	8-759-996-51	s	IC CXD8125Q
IC15	8-759-994-67	s	IC MB86022PF
IC16	8-759-321-99	s	IC HD63140CP
IC17	8-759-925-85	s	IC SN74HC32NS
IC18	8-759-926-77	s	IC SN74HC541NS
IC19	8-759-926-49	s	IC SN74HC245NS
IC20	8-759-926-77	s	IC SN74HC541NS
L1	1-421-329-00	s	COIL, CHOKE
L2	1-421-329-00	s	COIL, CHOKE
L3	1-421-329-00	s	COIL, CHOKE
L4	1-421-329-00	s	COIL, CHOKE
Q1	8-729-111-29	s	TRANSISTOR 2SD1616A-K
Q2	8-729-116-56	s	TRANSISTOR 2SB1068-L
Q3	8-729-116-56	s	TRANSISTOR 2SB1068-L
#Q4	8-729-905-61	s	TRANSISTOR DTC124EUT106

NOTE : For the parts marked # in the parts list, refer to "Section 23 Changed Parts".

(SE-144 BOARD(DVR-2000/2100))

Ref. No. or Q'ty	Part No.	SP	Description
R1	1-215-485-00	s	METAL 470k 1% 1/6W
R2	1-215-485-00	s	METAL 470k 1% 1/6W
R3	1-215-395-00	s	METAL 82 1% 1/6W
R4	1-215-470-00	s	METAL 110k 1% 1/6W
R5	1-215-487-00	s	METAL 560k 1% 1/6W
R6	1-215-470-00	s	METAL 110k 1% 1/6W
R7	1-215-487-00	s	METAL 560k 1% 1/6W
R8	1-215-479-00	s	METAL 270k 1% 1/6W
R9	1-215-479-00	s	METAL 270k 1% 1/6W
R11	1-216-065-00	s	METAL, CHIP 4.7k 5% 1/10W
R20	1-216-073-00	s	METAL, CHIP 10k 5% 1/10W
R25	1-216-073-00	s	METAL, CHIP 10k 5% 1/10W
R35	1-216-073-00	s	METAL, CHIP 10k 5% 1/10W
R40	1-216-073-00	s	METAL, CHIP 10k 5% 1/10W
R41	1-247-815-11	s	CARBON 220 5% 1/4W
R42	1-216-001-00	s	METAL, CHIP 10 5% 1/10W
R46	1-216-049-00	s	METAL, CHIP 1k 5% 1/10W
R47	1-216-049-00	s	METAL, CHIP 1k 5% 1/10W
R48	1-216-049-00	s	METAL, CHIP 1k 5% 1/10W
R49	1-216-049-00	s	METAL, CHIP 1k 5% 1/10W
R50	1-216-049-00	s	METAL, CHIP 1k 5% 1/10W
R51	1-216-049-00	s	METAL, CHIP 1k 5% 1/10W
R52	1-216-105-00	s	METAL, CHIP 220k 5% 1/10W
R53	1-216-105-00	s	METAL, CHIP 220k 5% 1/10W
R54	1-216-105-00	s	METAL, CHIP 220k 5% 1/10W
R55	1-216-105-00	s	METAL, CHIP 220k 5% 1/10W
R56	1-216-105-00	s	METAL, CHIP 220k 5% 1/10W
R57	1-216-105-00	s	METAL, CHIP 220k 5% 1/10W
R58	1-216-105-00	s	METAL, CHIP 220k 5% 1/10W
R59	1-216-105-00	s	METAL, CHIP 220k 5% 1/10W
R60	1-216-089-00	s	METAL, CHIP 47k 5% 1/10W
R87	1-216-061-00	s	METAL, CHIP 3.3k 5% 1/10W
R88	1-216-061-00	s	METAL, CHIP 3.3k 5% 1/10W
R89	1-216-061-00	s	METAL, CHIP 3.3k 5% 1/10W
R90	1-216-049-00	s	METAL, CHIP 1k 5% 1/10W
R91	1-216-049-00	s	METAL, CHIP 1k 5% 1/10W
R92	1-216-049-00	s	METAL, CHIP 1k 5% 1/10W
R93	1-216-025-00	s	METAL, CHIP 100 5% 1/10W
R106	1-216-049-00	s	METAL, CHIP 1k 5% 1/10W
R107	1-216-049-00	s	METAL, CHIP 1k 5% 1/10W
R108	1-216-049-00	s	METAL, CHIP 1k 5% 1/10W
R109	1-216-049-00	s	METAL, CHIP 1k 5% 1/10W
R110	1-216-073-00	s	METAL, CHIP 10k 5% 1/10W
R111	1-216-065-00	s	METAL, CHIP 4.7k 5% 1/10W
R112	1-216-073-00	s	METAL, CHIP 10k 5% 1/10W
R113	1-216-073-00	s	METAL, CHIP 10k 5% 1/10W
R114	1-216-057-00	s	METAL, CHIP 2.2k 5% 1/10W
R115	1-216-061-00	s	METAL, CHIP 3.3k 5% 1/10W
R116	1-215-443-00	s	METAL 8.2k 1% 1/6W
R117	1-215-443-00	s	METAL 8.2k 1% 1/6W
R118	1-215-443-00	s	METAL 8.2k 1% 1/6W
R119	1-215-443-00	s	METAL 8.2k 1% 1/6W
RB1	1-231-411-00	s	RESISTOR BLOCK 100kx8
RB2	1-231-450-00	s	RESISTOR BLOCK 3.3kx8
RB3	1-231-557-00	s	RESISTOR BLOCK 100kx4
#RB4	1-231-450-00	s	RESISTOR BLOCK 3.3kx8
RB5	1-231-411-00	s	RESISTOR BLOCK 100kx8
X1	1-577-076-11	s	CRYSTAL, 16.000MHz

NOTE : Please see page 22-42 for the parts that are not listed in the parts list.

SV-120 BOARD(DVR-2000/2100)

BOARD No. 1-639-116-12
DVR-2000(J) : S/N 10001 and higher
DVR-2000(UC): S/N 10001 and higher
DVR-2000(EK): S/N 10001 and higher
DVR-2100(J) : S/N 10001 and higher
DVR-2100(UC): S/N 10001 and higher
DVR-2100(EK): S/N 10001 and higher

Ref. No. or Q'ty	Part No.	SP	Description
#1pc	A-8271-760-A	o	MOUNTED CIRCUIT BOARD, SV-120
2pcs	1-526-659-00	o	SOCKET, IC 28P
2pcs	1-526-662-21	o	SOCKET, IC 40P
1pc	1-526-943-11	s	SOCKET, IC (PGA) 114P
1pc	1-540-029-11	o	SOCKET, IC (PGA) 68P
1pc	1-540-069-11	s	SOCKET, IC (IC113) 84P
1pc	1-540-080-11	s	SOCKET, IC (IC113) 68P
1pc	3-171-895-01	o	LABEL (P), SERIAL NUMBER
1pc	3-172-039-01	o	LABEL (1), SERIAL NUMBER,SV-120
1pc	3-172-040-01	o	LABEL (2), SERIAL NUMBER,SV-120
2pcs	3-714-634-01	o	LEVER, PC BOARD
2pcs	7-626-320-11	s	PIN, SPRING 3X8
9pcs	7-682-948-01	s	SCREW, +PSW 3x8
4pcs	7-685-547-14	s	SCREW, +BVTP 3x10 TYPE2 N-S
#C1	1-126-934-11	s	ELECT 220uF 20% 16V
#C2	1-126-934-11	s	ELECT 220uF 20% 16V
C3	1-164-097-11	s	CERAMIC 0.022uF 50V
#C4	1-126-934-11	s	ELECT 220uF 20% 16V
C5	1-164-097-11	s	CERAMIC 0.022uF 50V
#C6	1-126-934-11	s	ELECT 220uF 20% 16V
#C7	1-126-948-11	s	ELECT 100uF 20% 35V
#C8	1-126-948-11	s	ELECT 100uF 20% 35V
C9	1-164-097-11	s	CERAMIC 0.022uF 50V
#C10	1-126-948-11	s	ELECT 100uF 20% 35V
#C11	1-126-948-11	s	ELECT 100uF 20% 35V
C12	1-164-097-11	s	CERAMIC 0.022uF 50V
C13	1-164-097-11	s	CERAMIC 0.022uF 50V
C14	1-164-097-11	s	CERAMIC 0.022uF 50V
#C15	1-162-769-11	s	CERAMIC 0.0022uF 5% 50V
C16	1-162-728-11	s	CERAMIC 560pF 1% 50V
C17	1-162-728-11	s	CERAMIC 560pF 1% 50V
C18	1-126-160-11	s	ELECT 1uF 20% 50V
C19	1-126-160-11	s	ELECT 1uF 20% 50V
C20	1-126-160-11	s	ELECT 1uF 20% 50V
C21	1-162-718-11	s	CERAMIC 220pF 1% 50V
C22	1-162-718-11	s	CERAMIC 220pF 1% 50V
C23	1-162-765-11	s	CERAMIC 0.001uF 5% 50V
C24	1-162-773-11	s	CERAMIC 0.0047uF 5% 50V
C25	1-162-773-11	s	CERAMIC 0.0047uF 5% 50V
C26	1-164-097-11	s	CERAMIC 0.022uF 50V
C27	1-162-773-11	s	CERAMIC 0.0047uF 5% 50V
C28	1-162-773-11	s	CERAMIC 0.0047uF 5% 50V
C29	1-162-801-11	s	CERAMIC 0.039uF 10% 50V
C30	1-162-801-11	s	CERAMIC 0.039uF 10% 50V
C31	1-162-801-11	s	CERAMIC 0.039uF 10% 50V
C32	1-162-801-11	s	CERAMIC 0.039uF 10% 50V
C33	1-164-097-11	s	CERAMIC 0.022uF 50V
C34	1-124-234-00	s	ELECT 22uF 20% 16V
C35	1-161-888-11	s	CERAMIC 0.01uF 50V
C36	1-161-888-11	s	CERAMIC 0.01uF 50V

NOTE : For the parts marked # in the parts list, refer to "Section 23 Changed Parts".

(SV-120 BOARD(DVR-2000/2100))

Ref. No. or Q'ty	Part No.	SP	Description
C38	1-161-888-11	s	CERAMIC 0.01uF 50V
C39	1-161-888-11	s	CERAMIC 0.01uF 50V
C41	1-164-097-11	s	CERAMIC 0.022uF 50V
C42	1-164-097-11	s	CERAMIC 0.022uF 50V
C43	1-131-353-00	s	TANTALUM 10uF 10% 35V
C44	1-131-353-00	s	TANTALUM 10uF 10% 35V
C45	1-131-353-00	s	TANTALUM 10uF 10% 35V
C46	1-131-353-00	s	TANTALUM 10uF 10% 35V
C47	1-162-769-11	s	CERAMIC 0.0022uF 5% 50V
C48	1-164-097-11	s	CERAMIC 0.022uF 50V
C49	1-164-097-11	s	CERAMIC 0.022uF 50V
C50	1-164-097-11	s	CERAMIC 0.022uF 50V
C51	1-164-097-11	s	CERAMIC 0.022uF 50V
C52	1-164-097-11	s	CERAMIC 0.022uF 50V
C53	1-164-097-11	s	CERAMIC 0.022uF 50V
C54	1-164-097-11	s	CERAMIC 0.022uF 50V
C55	1-164-097-11	s	CERAMIC 0.022uF 50V
C56	1-164-097-11	s	CERAMIC 0.022uF 50V
C57	1-164-097-11	s	CERAMIC 0.022uF 50V
C59	1-164-097-11	s	CERAMIC 0.022uF 50V
C60	1-164-097-11	s	CERAMIC 0.022uF 50V
C61	1-164-097-11	s	CERAMIC 0.022uF 50V
C62	1-162-765-11	s	CERAMIC 0.001uF 5% 50V
C63	1-164-097-11	s	CERAMIC 0.022uF 50V
C64	1-126-163-11	s	ELECT 4.7uF 20% 50V
C65	1-126-160-11	s	ELECT 1uF 20% 50V
C66	1-162-765-11	s	CERAMIC 0.001uF 5% 50V
C67	1-164-097-11	s	CERAMIC 0.022uF 50V
C68	1-162-806-11	s	CERAMIC 0.1uF 10% 50V
C69	1-126-157-11	s	ELECT 10uF 20% 16V
C70	1-124-229-00	s	ELECT 33uF 20% 10V
C71	1-126-160-11	s	ELECT 1uF 20% 50V
C72	1-162-801-11	s	CERAMIC 0.039uF 10% 50V
C73	1-164-097-11	s	CERAMIC 0.022uF 50V
C74	1-162-765-11	s	CERAMIC 0.001uF 5% 50V
C75	1-162-765-11	s	CERAMIC 0.001uF 5% 50V
C76	1-162-718-11	s	CERAMIC 220pF 1% 50V
C77	1-162-871-11	s	CERAMIC 47pF 5% 50V
C78	1-162-871-11	s	CERAMIC 47pF 5% 50V
C79	1-162-891-11	s	CERAMIC 0.001uF 10% 50V
C80	1-162-891-11	s	CERAMIC 0.001uF 10% 50V
C81	1-162-891-11	s	CERAMIC 0.001uF 10% 50V
C82	1-162-891-11	s	CERAMIC 0.001uF 10% 50V
C83	1-131-347-00	s	TANTALUM 1uF 10% 35V
#C84	1-128-551-11	s	ELECT 22uF 20% 50V
#C85	1-126-933-11	s	ELECT 100uF 20% 16V
#C86	1-161-896-11	s	CERAMIC 0.22uF 50V
#C87	1-162-726-11	s	CERAMIC 470pF 1% 50V
#C88	1-162-726-11	s	CERAMIC 470pF 1% 50V
CN501	1-565-207-21	s	CONNECTOR, DIN 128P, MALE
CN502	1-565-207-21	s	CONNECTOR, DIN 128P, MALE
CN539	1-560-313-00	o	CONNECTOR, IL 8P, MALE
CP1	1-579-385-11	s	OSCILLATOR, CRYSTAL 22.11840MHz
D1	8-719-987-87	s	DIODE ERA82-004
D2	8-719-987-87	s	DIODE ERA82-004
D3	8-719-911-19	s	DIODE 1SS119
D4	8-719-911-19	s	DIODE 1SS119
D5	8-719-820-12	s	LED TLR224, RED

NOTE : Please see page 22-42 for the parts that are not listed in the parts list.

(SV-120 BOARD(DVR-2000/2100))

Ref. No. or Q'ty	Part No.	SP	Description
D6	8-719-820-12	s	LED TLR224, RED
D7	8-719-820-12	s	LED TLR224, RED
D8	8-719-400-35	s	LED LN35BP, GRN
D9	8-719-404-07	s	LED LN45YP, AMBER
D10	8-719-820-12	s	LED TLR224, RED
D11	8-719-101-98	s	DIODE 1SS97-0
FB1	1-535-178-00	s	BEAD, FERRITE
ICA1	8-759-917-05	s	IC SN74HC541N
ICA2	8-759-917-05	s	IC SN74HC541N
ICA3	8-759-917-05	s	IC SN74HC541N
ICA4	8-759-921-34	s	IC SN74HC245N
ICA5	8-759-917-05	s	IC SN74HC541N
ICA7	8-759-917-05	s	IC SN74HC541N
ICA8	8-759-917-05	s	IC SN74HC541N
ICA9	8-759-917-05	s	IC SN74HC541N
ICA10	8-759-916-16	s	IC MC74HC08AN
ICA11	8-759-917-05	s	IC SN74HC541N
ICA12	8-759-917-05	s	IC SN74HC541N
ICA13	8-759-921-34	s	IC SN74HC245N
ICA18	8-759-100-93	s	IC UPC393G2
ICA14A	8-759-100-96	s	IC UPC4558G2
ICA14B	8-759-916-14	s	IC SN74HC04N
ICA14C	8-759-908-15	s	IC TL431CLP
ICA15A	8-759-996-43	s	IC RC4558PS
ICA15B	8-759-983-69	s	IC LM358PS
ICA15C	8-759-100-96	s	IC UPC4558G2
ICA15D	8-759-100-96	s	IC UPC4558G2
ICA15E	8-759-981-48	s	IC NJM082M
ICA16A	8-759-981-48	s	IC NJM082M
ICA16B	8-759-105-49	s	IC UPC319G2
ICA17A	8-759-103-09	s	IC UPC4082G2
ICA17B	8-759-105-49	s	IC UPC319G2
ICB1	8-759-917-05	s	IC SN74HC541N
ICB2	8-759-917-05	s	IC SN74HC541N
ICB3	8-759-921-34	s	IC SN74HC245N
ICB4	8-759-921-34	s	IC SN74HC245N
ICB5	8-759-921-34	s	IC SN74HC245N
ICB6	8-759-917-05	s	IC SN74HC541N
ICB7	8-759-917-43	s	IC SN74HC138AN
ICB8	8-759-917-43	s	IC SN74HC138AN
ICB9	8-759-007-09	s	IC MC74HC540N
ICB10	8-759-917-05	s	IC SN74HC541N
ICB11	8-759-518-78	s	IC SN751177N
ICB12	8-759-917-05	s	IC SN74HC541N
ICB13	8-759-917-05	s	IC SN74HC541N
ICB15	8-759-981-48	s	IC NJM082M
ICB16	8-759-917-05	s	IC SN74HC541N
ICB17	8-759-983-69	s	IC LM358PS
ICC1	8-759-921-34	s	IC SN74HC245N
ICC2	8-759-916-25	s	IC SN74HC32AN
ICC4	8-759-921-21	s	IC SN74HC163N
ICC5	8-759-917-05	s	IC SN74HC541N
ICC6	8-759-917-05	s	IC SN74HC541N
ICC7	8-759-518-69	s	IC MB89363
ICC10	8-759-058-85	s	IC 16V8-SV120-101-02, PLD
ICC11	8-759-552-38	s	IC 16V8-SV120-102-01, PLD
ICC12	8-759-344-99	o	IC 27C512-SV120-01-0304, EPROM

NOTE : For the parts marked # in the parts list, refer to "Section 23 Changed Parts".

(SV-120 BOARD(DVR-2000/2100))

Ref. No. or Q'ty	Part No.	SP	Description
ICC14	8-759-996-51	s	IC CXD8125Q
ICC16	8-759-921-21	s	IC SN74HC163N
ICC17A	8-759-983-69	s	IC LM358PS
ICC17B	8-759-983-69	s	IC LM358PS
ICD1	8-759-973-43	s	IC MB8421-90LPFQ
ICD4	8-759-510-88	s	IC MB8431-90LPFQ
ICD5	8-759-552-42	s	IC 16V8-SV120-201-01, PLD
ICD6	8-759-552-43	s	IC 16V8-SV120-202-01, PLD
ICD11	8-759-552-39	s	IC 16V8-SV120-103-01, PLD
ICD14	8-759-996-51	s	IC CXD8125Q
ICD16	8-759-032-81	s	IC MC74HC74N
ICD18	8-759-321-99	s	IC HD63140CP
ICE5	8-759-917-05	s	IC SN74HC541N
ICE6	8-759-917-05	s	IC SN74HC541N
ICE7	8-759-239-47	s	IC TC74HC123AP
ICE8	8-759-239-47	s	IC TC74HC123AP
ICE10	8-759-000-01	s	IC MC74HC4538N
ICE12	8-759-105-76	s	IC UPD71059C
ICE16	8-759-032-81	s	IC MC74HC74N
ICE17	8-759-916-14	s	IC SN74HC04N
#ICE18	8-759-273-24	s	IC CX23028A
ICF1	8-759-921-34	s	IC SN74HC245N
ICF2	8-759-921-34	s	IC SN74HC245N
ICF3	8-759-921-34	s	IC SN74HC245N
ICF4	8-759-921-34	s	IC SN74HC245N
ICF10	8-759-988-66	s	IC MB89371APF
ICF12	8-759-367-23	s	IC TC55257CFL-70L
ICF14	8-759-367-23	s	IC TC55257CFL-70L
ICF15	8-759-938-83	s	IC CF77074NT
ICF16	8-759-938-83	s	IC CF77074NT
ICF17	8-759-938-83	s	IC CF77074NT
ICF18	8-759-938-83	s	IC CF77074NT
#ICG1	8-749-011-87	s	IC M48Z30Y-100PM1, NOVRAM
#ICG3	8-749-011-87	s	IC M48Z30Y-100PM1, NOVRAM
ICG4	8-759-055-96	s	IC 22V10-SV120-201-04, PLD
#ICG5	8-759-343-20	o	IC 27C1024-SV12001-0301,EPROM
#ICG6	8-759-343-19	s	IC 27C1024-SV12002-0301,EPROM
ICG8	8-759-013-87	s	IC MC68681P
ICG10	1-577-541-11	s	OSCILLATOR, CRYSTAL (IC TYPE)
ICG11	8-759-917-05	s	IC SN74HC541N
ICG12	8-759-367-23	s	IC TC55257CFL-70L
ICG14	8-759-367-23	s	IC TC55257CFL-70L
ICG16	8-759-105-77	s	IC UPD71054C
ICG18	8-759-105-77	s	IC UPD71054C
ICH2	8-759-011-89	s	IC MC68020RC16
ICH4	8-759-552-44	s	IC 16V8-SV120-203-01, PLD
ICH5	8-759-202-91	s	IC SN74HC148N
ICH6	8-759-916-25	s	IC SN74HC32AN
ICH7	8-759-917-43	s	IC SN74HC138AN
ICH8	8-759-916-25	s	IC SN74HC32AN
ICH10	8-759-552-50	s	IC 22V10-SV120-101-01, PLD
ICH11	8-759-552-51	s	IC 22V10-SV120-102-01, PLD
ICH12	8-759-058-84	s	IC 16V8-SV120-103-02, PLD
ICH16	8-759-105-77	s	IC UPD71054C
ICH18	1-567-796-11	s	OSCILLATOR, CRYSTAL 14.7456MHz
ICJ4	8-759-511-91	s	IC MB89254H-SOP
ICJ5	8-759-552-45	s	IC 16V8-SV120-204-01, PLD

NOTE : Please see page 22-42 for the parts that are not listed in the parts list.

(SV-120 BOARD(DVR-2000/2100))

Ref. No. or Q'ty	Part No.	SP	Description
ICJ6	8-759-552-46	s	IC 16V8-SV120-205-01, PLD
ICJ7	8-759-278-79	s	IC 22V10-SV120-202-02, PLD
ICJ8	8-759-278-79	s	IC 22V10-SV120-202-02, PLD
ICJ10	8-759-552-56	s	IC 22V10-SV120-203-01, PLD
ICJ11	8-759-552-53	s	IC 22V10-SV120-104-01, PLD
ICJ12	8-759-552-41	s	IC 16V8-SV120-105-01, PLD
ICJ14	8-759-147-93	s	IC UPD70136R-12
ICJ18	8-759-242-05	s	IC SN74HC4024N
ICK1	8-759-502-37	s	IC CY7C421-30PC
ICK2	8-759-921-34	s	IC SN74HC245N
ICK3	8-759-502-37	s	IC CY7C421-30PC
ICK4	8-759-921-34	s	IC SN74HC245N
ICK5	8-759-917-06	s	IC SN74HC574N
ICK6	8-759-917-06	s	IC SN74HC574N
ICK7	8-759-917-06	s	IC SN74HC574N
ICK8	8-759-552-47	s	IC 16V8-SV120-206-01, PLD
ICK14	8-759-032-81	s	IC MC74HC74N
ICK15	8-759-032-81	s	IC MC74HC74N
ICK16	8-759-916-14	s	IC SN74HC04N
ICK18	8-759-947-86	s	IC CXD1317Q
ICL1	8-759-989-96	s	IC MB89251APF
ICL3	8-759-989-96	s	IC MB89251APF
ICL4	8-759-917-05	s	IC SN74HC541N
ICL5	8-759-552-57	s	IC 22V10-SV120-204-01, PLD
ICL6	8-759-552-48	s	IC 16V8-SV120-207-01, PLD
ICL8	8-759-909-72	s	IC CX7912A
ICL10	8-759-973-43	s	IC MB8421-90LPFQ
ICL12	8-759-552-40	s	IC 16V8-SV120-104-01, PLD
#ICL14A	8-759-921-19	s	IC SN74HC161N
#ICL14B	8-759-916-14	s	IC SN74HC04N
ICL15A	8-759-921-19	s	IC SN74HC161N
ICL15B	8-759-916-15	s	IC SN74HC05AN
ICL16A	8-759-921-08	s	IC SN74HC02AN
ICL16B	8-759-916-54	s	IC SN74HC174N
ICL17A	8-759-208-04	s	IC MC14520BCP
ICL17B	8-759-916-40	s	IC SN74HC125N
ICL18A	8-759-045-44	s	IC CXD8226P
ICL18B	8-759-916-41	s	IC SN74HC126N
ICM1	8-759-916-14	s	IC SN74HC04N
ICM2	8-759-340-46	s	IC HD14046BP
ICM3	8-759-916-71	s	IC SN74HC244N
ICM4	8-759-921-34	s	IC SN74HC245N
#ICM5	8-759-299-49	s	IC CY7C164-25PC
ICM6	8-759-552-58	s	IC 22V10-SV120-205-01, PLD
ICM7	8-759-264-51	s	IC 20RA10-SV120-201-02, PLD
ICM8	8-759-231-98	s	IC TC74HC40105AP
ICM10	8-759-073-62	s	IC 27C512-SV120-02-0102, EPROM
ICM12	8-759-947-86	s	IC CXD1317Q
ICM15	8-759-917-05	s	IC SN74HC541N
ICM16	8-759-555-15	s	IC 27C512-SV12003-0100, EPROM
ICM17	8-759-916-54	s	IC SN74HC174N
ICM18	8-759-916-54	s	IC SN74HC174N
ICN2	8-759-916-74	s	IC SN74HC253N
ICN6	8-759-001-71	s	IC MC74HC4075N
ICN7	8-759-916-23	s	IC SN74HC27N
ICN8	8-759-916-40	s	IC SN74HC125N
ICN1A	1-567-795-11	s	OSCILLATOR, CRYSTAL 14.500MHz

NOTE : For the parts marked # in the parts list, refer to "Section 23 Changed Parts".

(SV-120 BOARD(DVR-2000/2100))

Ref. No. or Q'ty	Part No.	SP	Description
ICN1B	1-567-794-11	s	OSCILLATOR, CRYSTAL 14.31818MHz
ICN17	8-759-916-20	s	IC SN74HC14AN
ICN18	8-759-917-11	s	IC SN74HC393AN
ICP1	8-759-916-25	s	IC SN74HC32AN
ICP2	8-759-032-81	s	IC MC74HC74N
ICP3	8-759-001-22	s	IC MC74HC107N
ICP5	8-759-909-16	s	IC CX7907A
ICP6	8-759-916-14	s	IC SN74HC04N
ICP7	8-759-552-49	s	IC 16V8-SV120-208-01, PLD
ICP8	8-759-916-41	s	IC SN74HC126N
ICP11	8-759-143-98	s	IC UPD70320L-8
ICP13	8-752-105-77	s	IC UPD71054C
ICP14	8-759-938-83	s	IC CF77074NT
ICP15	8-759-032-81	s	IC MC74HC74N
ICP16	8-759-917-38	s	IC SN74HC4040N
ICP17	8-759-916-12	s	IC SN74HC00N
ICP18	8-759-916-16	s	IC MC74HC08AN
ICQ5	8-759-939-36	s	IC TL7705ACP
JP1	1-566-388-11	s	CONNECTOR 8P, MALE
JP2	1-564-948-21	o	PIN, SHORTING
JP3	1-564-948-21	o	PIN, SHORTING
JS1	1-563-859-11	s	PLUG, SHORTING
JS2	1-563-859-11	s	PLUG, SHORTING
JS3	1-563-859-11	s	PLUG, SHORTING
#L1	1-460-086-11	s	COIL, CHOKE 10UH
#L2	1-460-086-11	s	COIL, CHOKE 10UH
#L3	1-460-086-11	s	COIL, CHOKE 10UH
#L4	1-460-086-11	s	COIL, CHOKE 10UH
#L5	1-460-086-11	s	COIL, CHOKE 10UH
Q1	8-729-900-36	s	TRANSISTOR DTC124ES
Q2	8-729-900-36	s	TRANSISTOR DTC124ES
R1	1-249-429-11	s	CARBON 10k 5% 1/4W
R2	1-249-429-11	s	CARBON 10k 5% 1/4W
R3	1-249-429-11	s	CARBON 10k 5% 1/4W
R4	1-249-429-11	s	CARBON 10k 5% 1/4W
R5	1-249-437-11	s	CARBON 47k 5% 1/4W
R6	1-249-422-11	s	CARBON 2.7k 5% 1/4W
R7	1-249-421-11	s	CARBON 2.2k 5% 1/4W
R8	1-249-425-11	s	CARBON 4.7k 5% 1/4W
R9	1-249-425-11	s	CARBON 4.7k 5% 1/4W
R10	1-249-437-11	s	CARBON 47k 5% 1/4W
R11	1-249-437-11	s	CARBON 47k 5% 1/4W
R12	1-249-429-11	s	CARBON 10k 5% 1/4W
R13	1-249-437-11	s	CARBON 47k 5% 1/4W
R14	1-249-437-11	s	CARBON 47k 5% 1/4W
R15	1-249-437-11	s	CARBON 47k 5% 1/4W
R16	1-249-437-11	s	CARBON 47k 5% 1/4W
R17	1-249-437-11	s	CARBON 47k 5% 1/4W
R18	1-215-445-00	s	METAL 10k 1% 1/6W
R20	1-215-456-00	s	METAL 30k 1% 1/6W
R21	1-215-445-00	s	METAL 10k 1% 1/6W
R22	1-215-452-00	s	METAL 20k 1% 1/6W
R23	1-247-887-00	s	CARBON 220k 5% 1/4W
R24	1-247-887-00	s	CARBON 220k 5% 1/4W
R25	1-215-421-00	s	METAL 1k 1% 1/6W

NOTE : Please see page 22-42 for the parts that are not listed in the parts list.

(SV-120 BOARD(DVR-2000/2100))

Ref. No. or Q'ty	Part No.	SP	Description
R26	1-215-421-00	s	METAL 1k 1% 1/6W
R27	1-215-456-00	s	METAL 30k 1% 1/6W
R29	1-215-414-00	s	METAL 510 1% 1/6W
R30	1-215-414-00	s	METAL 510 1% 1/6W
R31	1-215-445-00	s	METAL 10k 1% 1/6W
R32	1-215-445-00	s	METAL 10k 1% 1/6W
R33	1-215-445-00	s	METAL 10k 1% 1/6W
R34	1-215-445-00	s	METAL 10k 1% 1/6W
R35	1-215-452-00	s	METAL 20k 1% 1/6W
R36	1-215-465-00	s	METAL 68k 1% 1/6W
R37	1-215-461-00	s	METAL 47k 1% 1/6W
R38	1-215-437-00	s	METAL 4.7k 1% 1/6W
R39	1-215-452-00	s	METAL 20k 1% 1/6W
R40	1-215-465-00	s	METAL 68k 1% 1/6W
R41	1-215-461-00	s	METAL 47k 1% 1/6W
R42	1-215-437-00	s	METAL 4.7k 1% 1/6W
R43	1-215-452-00	s	METAL 20k 1% 1/6W
R44	1-215-461-00	s	METAL 47k 1% 1/6W
R45	1-215-452-00	s	METAL 20k 1% 1/6W
R46	1-215-461-00	s	METAL 47k 1% 1/6W
R47	1-215-469-00	s	METAL 100k 1% 1/6W
R48	1-215-469-00	s	METAL 100k 1% 1/6W
R49	1-215-437-00	s	METAL 4.7k 1% 1/6W
R50	1-215-451-00	s	METAL 18k 1% 1/6W
R51	1-215-451-00	s	METAL 18k 1% 1/6W
R52	1-215-479-00	s	METAL 270k 1% 1/6W
R53	1-249-421-11	s	CARBON 2.2k 5% 1/4W
R54	1-215-453-00	s	METAL 22k 1% 1/6W
R55	1-215-452-00	s	METAL 20k 1% 1/6W
R56	1-215-459-00	s	METAL 39k 1% 1/6W
R57	1-215-453-00	s	METAL 22k 1% 1/6W
R58	1-247-887-00	s	CARBON 220k 5% 1/4W
R59	1-247-887-00	s	CARBON 220k 5% 1/4W
R60	1-247-887-00	s	CARBON 220k 5% 1/4W
R61	1-247-887-00	s	CARBON 220k 5% 1/4W
R62	1-215-453-00	s	METAL 22k 1% 1/6W
R63	1-249-421-11	s	CARBON 2.2k 5% 1/4W
R64	1-215-469-00	s	METAL 100k 1% 1/6W
R65	1-215-429-00	s	METAL 2.2k 1% 1/6W
R66	1-215-487-00	s	METAL 560k 1% 1/6W
R67	1-249-421-11	s	CARBON 2.2k 5% 1/4W
R68	1-215-469-00	s	METAL 100k 1% 1/6W
R69	1-215-429-00	s	METAL 2.2k 1% 1/6W
R70	1-215-487-00	s	METAL 560k 1% 1/6W
R71	1-249-421-11	s	CARBON 2.2k 5% 1/4W
R72	1-215-469-00	s	METAL 100k 1% 1/6W
R73	1-215-429-00	s	METAL 2.2k 1% 1/6W
R74	1-215-487-00	s	METAL 560k 1% 1/6W
R75	1-249-421-11	s	CARBON 2.2k 5% 1/4W
R76	1-215-469-00	s	METAL 100k 1% 1/6W
R77	1-215-429-00	s	METAL 2.2k 1% 1/6W
R78	1-215-487-00	s	METAL 560k 1% 1/6W
R79	1-249-411-11	s	CARBON 330 5% 1/4W
R80	1-249-411-11	s	CARBON 330 5% 1/4W
R81	1-215-459-00	s	METAL 39k 1% 1/6W
R82	1-215-459-00	s	METAL 39k 1% 1/6W
R83	1-249-429-11	s	CARBON 10k 5% 1/4W
R84	1-249-429-11	s	CARBON 10k 5% 1/4W

NOTE : For the parts marked # in the parts list, refer to "Section 23 Changed Parts".

(SV-120 BOARD(DVR-2000/2100))

Ref. No. or Q'ty	Part No.	SP	Description
R85	1-249-429-11	s	CARBON 10k 5% 1/4W
R86	1-249-429-11	s	CARBON 10k 5% 1/4W
R87	1-249-411-11	s	CARBON 330 5% 1/4W
R88	1-249-411-11	s	CARBON 330 5% 1/4W
R90	1-249-429-11	s	CARBON 10k 5% 1/4W
R91	1-247-807-31	s	CARBON 100 5% 1/4W
R92	1-247-807-31	s	CARBON 100 5% 1/4W
R93	1-247-807-31	s	CARBON 100 5% 1/4W
R94	1-247-807-31	s	CARBON 100 5% 1/4W
R95	1-247-807-31	s	CARBON 100 5% 1/4W
R96	1-247-807-31	s	CARBON 100 5% 1/4W
R97	1-247-807-31	s	CARBON 100 5% 1/4W
R98	1-249-429-11	s	CARBON 10k 5% 1/4W
R99	1-249-429-11	s	CARBON 10k 5% 1/4W
R100	1-249-429-11	s	CARBON 10k 5% 1/4W
R101	1-249-429-11	s	CARBON 10k 5% 1/4W
R102	1-249-429-11	s	CARBON 10k 5% 1/4W
R103	1-249-429-11	s	CARBON 10k 5% 1/4W
R104	1-249-425-11	s	CARBON 4.7k 5% 1/4W
R105	1-247-807-31	s	CARBON 100 5% 1/4W
R106	1-247-807-31	s	CARBON 100 5% 1/4W
R107	1-249-437-11	s	CARBON 47k 5% 1/4W
R108	1-247-807-31	s	CARBON 100 5% 1/4W
R109	1-247-807-31	s	CARBON 100 5% 1/4W
R110	1-247-807-31	s	CARBON 100 5% 1/4W
R111	1-247-807-31	s	CARBON 100 5% 1/4W
R112	1-247-807-31	s	CARBON 100 5% 1/4W
R113	1-247-807-31	s	CARBON 100 5% 1/4W
R114	1-247-807-31	s	CARBON 100 5% 1/4W
R115	1-247-807-31	s	CARBON 100 5% 1/4W
R116	1-249-429-11	s	CARBON 10k 5% 1/4W
R117	1-247-863-91	s	CARBON 22k 5% 1/4W
R118	1-215-421-00	s	METAL 1k 1% 1/6W
R119	1-249-429-11	s	CARBON 10k 5% 1/4W
R120	1-215-445-00	s	METAL 10k 1% 1/6W
R121	1-249-429-11	s	CARBON 10k 5% 1/4W
R122	1-215-453-00	s	METAL 22k 1% 1/6W
R123	1-215-437-00	s	METAL 4.7k 1% 1/6W
R124	1-249-429-11	s	CARBON 10k 5% 1/4W
R125	1-249-437-11	s	CARBON 47k 5% 1/4W
R126	1-249-437-11	s	CARBON 47k 5% 1/4W
R127	1-249-437-11	s	CARBON 47k 5% 1/4W
R128	1-249-437-11	s	CARBON 47k 5% 1/4W
R129	1-249-429-11	s	CARBON 10k 5% 1/4W
R130	1-249-429-11	s	CARBON 10k 5% 1/4W
R131	1-249-437-11	s	CARBON 47k 5% 1/4W
R132	1-249-437-11	s	CARBON 47k 5% 1/4W
R133	1-247-807-31	s	CARBON 100 5% 1/4W
R134	1-247-807-31	s	CARBON 100 5% 1/4W
R135	1-247-807-31	s	CARBON 100 5% 1/4W
R136	1-249-437-11	s	CARBON 47k 5% 1/4W
R137	1-247-807-31	s	CARBON 100 5% 1/4W
R138	1-247-807-31	s	CARBON 100 5% 1/4W
R139	1-247-807-31	s	CARBON 100 5% 1/4W
R140	1-247-807-31	s	CARBON 100 5% 1/4W
R141	1-247-807-31	s	CARBON 100 5% 1/4W
R142	1-247-807-31	s	CARBON 100 5% 1/4W
R143	1-249-437-11	s	CARBON 47k 5% 1/4W
R144	1-247-807-31	s	CARBON 100 5% 1/4W

NOTE : Please see page 22-42 for the parts that are not listed in the parts list.

(SV-120 BOARD(DVR-2000/2100))

Ref. No. or Q'ty	Part No.	SP	Description
R145	1-249-429-11	s	CARBON 10k 5% 1/4W
R147	1-247-895-00	s	CARBON 470k 5% 1/4W
#R148	1-215-470-00	s	METAL 110k 1% 1/6W
R149	1-249-435-11	s	CARBON 33k 5% 1/4W
R150	1-249-441-11	s	CARBON 100k 5% 1/4W
R151	1-249-429-11	s	CARBON 10k 5% 1/4W
R152	1-249-429-11	s	CARBON 10k 5% 1/4W
R153	1-249-429-11	s	CARBON 10k 5% 1/4W
R154	1-249-437-11	s	CARBON 47k 5% 1/4W
R155	1-249-429-11	s	CARBON 10k 5% 1/4W
R156	1-249-429-11	s	CARBON 10k 5% 1/4W
R157	1-249-437-11	s	CARBON 47k 5% 1/4W
R158	1-249-410-11	s	CARBON 270 5% 1/4W
R159	1-249-410-11	s	CARBON 270 5% 1/4W
R160	1-249-410-11	s	CARBON 270 5% 1/4W
R161	1-249-412-11	s	CARBON 390 5% 1/4W
R162	1-249-410-11	s	CARBON 270 5% 1/4W
R163	1-249-406-11	s	CARBON 120 5% 1/4W
R164	1-249-410-11	s	CARBON 270 5% 1/4W
R165	1-249-429-11	s	CARBON 10k 5% 1/4W
R166	1-249-429-11	s	CARBON 10k 5% 1/4W
R167	1-249-429-11	s	CARBON 10k 5% 1/4W
R168	1-249-429-11	s	CARBON 10k 5% 1/4W
R169	1-249-429-11	s	CARBON 10k 5% 1/4W
R170	1-249-429-11	s	CARBON 10k 5% 1/4W
R171	1-249-437-11	s	CARBON 47k 5% 1/4W
R172	1-249-437-11	s	CARBON 47k 5% 1/4W
R173	1-249-429-11	s	CARBON 10k 5% 1/4W
R176	1-249-429-11	s	CARBON 10k 5% 1/4W
R177	1-249-437-11	s	CARBON 47k 5% 1/4W
R178	1-247-807-31	s	CARBON 100 5% 1/4W
R179	1-249-417-11	s	CARBON 1k 5% 1/4W
R180	1-249-429-11	s	CARBON 10k 5% 1/4W
R181	1-215-429-00	s	METAL 2.2k 1% 1/6W
R182	1-215-429-00	s	METAL 2.2k 1% 1/6W
R183	1-249-437-11	s	CARBON 47k 5% 1/4W
R184	1-249-429-11	s	CARBON 10k 5% 1/4W
R185	1-215-449-00	s	METAL 15k 1% 1/6W
R186	1-215-437-00	s	METAL 4.7k 1% 1/6W
R187	1-215-445-00	s	METAL 10k 1% 1/6W
#R188	1-249-429-11	s	CARBON 10k 5% 1/4W
#R189	1-249-429-11	s	CARBON 10k 5% 1/4W
#R190	1-249-429-11	s	CARBON 10k 5% 1/4W
#R191	1-249-429-11	s	CARBON 10k 5% 1/4W
#R192	1-249-441-11	s	CARBON 100k 5% 1/4W
RB1	1-235-005-00	s	RESISTOR BLOCK 47kx8
RB2	1-235-005-00	s	RESISTOR BLOCK 47kx8
RB3	1-231-411-00	s	RESISTOR BLOCK 100kx8
RB4	1-231-410-00	s	RESISTOR BLOCK 10kx8
RB5	1-231-410-00	s	RESISTOR BLOCK 10kx8
RB6	1-231-533-00	s	RESISTOR BLOCK 10kx4
RB7	1-231-533-00	s	RESISTOR BLOCK 10kx4
RB8	1-235-005-00	s	RESISTOR BLOCK 47kx8
RB10	1-235-005-00	s	RESISTOR BLOCK 47kx8
RB11	1-235-005-00	s	RESISTOR BLOCK 47kx8
RB12	1-231-411-00	s	RESISTOR BLOCK 100kx8
RB13	1-231-411-00	s	RESISTOR BLOCK 100kx8
RB14	1-231-411-00	s	RESISTOR BLOCK 100kx8
RB15	1-231-411-00	s	RESISTOR BLOCK 100kx8

NOTE : For the parts marked # in the parts list, refer to "Section 23 Changed Parts".

(SV-120 BOARD(DVR-2000/2100))

Ref. No. or Q'ty	Part No.	SP	Description
RB16	1-235-549-11	s	RESISTOR BLOCK 47kx4
RB17	1-231-410-00	s	RESISTOR BLOCK 10kx8
RB18	1-231-410-00	s	RESISTOR BLOCK 10kx8
RB19	1-231-410-00	s	RESISTOR BLOCK 10kx8
RB20	1-231-410-00	s	RESISTOR BLOCK 10kx8
RB21	1-235-549-11	s	RESISTOR BLOCK 47kx4
RB22	1-231-410-00	s	RESISTOR BLOCK 10kx8
RB23	1-235-005-00	s	RESISTOR BLOCK 47kx8
RB24	1-235-005-00	s	RESISTOR BLOCK 47kx8
RB25	1-231-533-00	s	RESISTOR BLOCK 10kx4
RB26	1-235-005-00	s	RESISTOR BLOCK 47kx8
RB27	1-231-533-00	s	RESISTOR BLOCK 10kx4
RB28	1-235-005-00	s	RESISTOR BLOCK 47kx8
RB29	1-235-005-00	s	RESISTOR BLOCK 47kx8
RB30	1-235-005-00	s	RESISTOR BLOCK 47kx8
RB31	1-235-005-00	s	RESISTOR BLOCK 47kx8
RB32	1-235-005-00	s	RESISTOR BLOCK 47kx8
RB33	1-235-549-11	s	RESISTOR BLOCK 47kx4
RB34	1-235-549-11	s	RESISTOR BLOCK 47kx4
RB35	1-235-005-00	s	RESISTOR BLOCK 47kx8
RB36	1-235-005-00	s	RESISTOR BLOCK 47kx8
RB37	1-235-005-00	s	RESISTOR BLOCK 47kx8
#RB38	1-231-533-00	s	RESISTOR BLOCK 10kx4
RV1	1-237-512-21	s	RES, ADJ METAL 100
S1	1-570-728-11	s	SWITCH, DIP
S2	1-570-728-11	s	SWITCH, DIP
S3	1-553-856-00	s	SWITCH, TACTILE
S4	1-554-397-21	s	SWITCH, TOGGLE
S7	1-553-856-00	s	SWITCH, TACTILE
S8	1-553-856-00	s	SWITCH, TACTILE
#S9	1-570-727-11	s	SWITCH, DIP

NOTE : Please see page 22-42 for the parts that are not listed in the parts list.

SW-423 BOARD(DVR-2000/2100/BKDV-2010)

Ref. No. or Q'ty	Part No.	SP	Description
1pc	A-6017-187-A	o	MOUNTED CIRCUIT BOARD, SW-423
CN508	1-506-478-21	o	PIN, CONNECTOR 13P
D1	8-719-918-88	s	DIODE 1SS198
D2	8-719-918-88	s	DIODE 1SS198
D3	8-719-918-88	s	DIODE 1SS198
D4	8-719-918-88	s	DIODE 1SS198
D5	8-719-918-88	s	DIODE 1SS198
D6	8-719-918-88	s	DIODE 1SS198
D7	8-719-918-88	s	DIODE 1SS198
D8	8-719-918-88	s	DIODE 1SS198
D9	8-719-918-88	s	DIODE 1SS198
D10	8-719-918-88	s	DIODE 1SS198
D11	8-719-918-88	s	DIODE 1SS198
D12	8-719-918-88	s	DIODE 1SS198
D13	8-719-918-88	s	DIODE 1SS198
D14	8-719-918-88	s	DIODE 1SS198
D15	8-719-918-88	s	DIODE 1SS198
D16	8-719-918-88	s	DIODE 1SS198
D17	8-719-918-88	s	DIODE 1SS198
D18	8-719-918-88	s	DIODE 1SS198
D19	8-719-918-88	s	DIODE 1SS198
D20	8-719-918-88	s	DIODE 1SS198
D21	8-719-918-88	s	DIODE 1SS198
D22	8-719-918-88	s	DIODE 1SS198
D23	8-719-918-88	s	DIODE 1SS198
D24	8-719-918-88	s	DIODE 1SS198
D25	8-719-918-88	s	DIODE 1SS198
D26	8-719-918-88	s	DIODE 1SS198
D27	8-719-918-88	s	DIODE 1SS198
D28	8-719-918-88	s	DIODE 1SS198
D29	8-719-918-88	s	DIODE 1SS198
D30	8-719-918-88	s	DIODE 1SS198
D31	8-719-918-88	s	DIODE 1SS198
D32	8-719-918-88	s	DIODE 1SS198
D33	8-719-918-88	s	DIODE 1SS198
D34	8-719-918-88	s	DIODE 1SS198
D35	8-719-918-88	s	DIODE 1SS198
D36	8-719-918-88	s	DIODE 1SS198
D37	8-719-918-88	s	DIODE 1SS198

NOTE : For the parts marked # in the parts list, refer to "Section 23 Changed Parts".

SW-448 BOARD(DVR-2000/2100/BKDV-2010)

Ref. No. or Q'ty	Part No.	SP	Description
1pc	A-6017-186-A	o	MOUNTED CIRCUIT BOARD, SW-448
1pc	3-531-576-11	s	RIVET
2pcs	3-674-390-00	s	HOLDER (B), LED
2pcs	7-682-947-01	s	SCREW, +PSW 3x6
#1pc	8-759-510-82	s	IC EPM5032DC-2
C1	1-163-001-11	s	CERAMIC 220pF 10% 50V
C2	1-163-001-11	s	CERAMIC 220pF 10% 50V
C3	1-163-001-11	s	CERAMIC 220pF 10% 50V
C4	1-163-001-11	s	CERAMIC 220pF 10% 50V
C5	1-163-001-11	s	CERAMIC 220pF 10% 50V
C6	1-163-001-11	s	CERAMIC 220pF 10% 50V
C7	1-163-001-11	s	CERAMIC 220pF 10% 50V
C8	1-163-001-11	s	CERAMIC 220pF 10% 50V
C9	1-124-234-00	s	ELECT 22uF 20% 16V
#C11	1-161-900-11	s	CERAMIC 1uF 50V
C12	1-126-157-11	s	ELECT 10uF 20% 16V
C13	1-124-455-00	s	ELECT 100uF 20% 16V
C14	1-162-802-11	s	CERAMIC 0.047uF 10% 50V
C15	1-162-806-11	s	CERAMIC 0.1uF 10% 50V
C16	1-162-806-11	s	CERAMIC 0.1uF 10% 50V
C17	1-162-710-11	s	CERAMIC 100pF 1% 50V
C100	1-124-234-00	s	ELECT 22uF 20% 16V
C101	1-124-248-00	s	ELECT 22uF 20% 35V
C102	1-124-248-00	s	ELECT 22uF 20% 35V
C103	1-163-033-00	s	CERAMIC, CHIP 0.022uF 50V
C104	1-163-033-00	s	CERAMIC, CHIP 0.022uF 50V
C105	1-163-033-00	s	CERAMIC, CHIP 0.022uF 50V
C106	1-163-033-00	s	CERAMIC, CHIP 0.022uF 50V
C107	1-163-033-00	s	CERAMIC, CHIP 0.022uF 50V
C108	1-163-033-00	s	CERAMIC, CHIP 0.022uF 50V
C109	1-163-033-00	s	CERAMIC, CHIP 0.022uF 50V
C110	1-163-033-00	s	CERAMIC, CHIP 0.022uF 50V
C111	1-163-033-00	s	CERAMIC, CHIP 0.022uF 50V
C112	1-163-033-00	s	CERAMIC, CHIP 0.022uF 50V
C113	1-163-033-00	s	CERAMIC, CHIP 0.022uF 50V
C114	1-163-033-00	s	CERAMIC, CHIP 0.022uF 50V
C115	1-163-033-00	s	CERAMIC, CHIP 0.022uF 50V
C116	1-163-033-00	s	CERAMIC, CHIP 0.022uF 50V
C117	1-163-033-00	s	CERAMIC, CHIP 0.022uF 50V
C118	1-163-033-00	s	CERAMIC, CHIP 0.022uF 50V
C119	1-163-033-00	s	CERAMIC, CHIP 0.022uF 50V
C120	1-163-033-00	s	CERAMIC, CHIP 0.022uF 50V
C121	1-163-033-00	s	CERAMIC, CHIP 0.022uF 50V
C122	1-163-033-00	s	CERAMIC, CHIP 0.022uF 50V
C123	1-163-033-00	s	CERAMIC, CHIP 0.022uF 50V
CN504	1-580-570-11	o	CONNECTOR LY 30P, MALE
CN505	1-580-570-11	o	CONNECTOR LY 30P, MALE
CN506	1-506-478-21	o	PIN, CONNECTOR 13P
CN507	1-580-536-11	s	CONNECTOR, LY 14P, MALE
CN511	1-580-563-11	o	CONNECTOR LY 16P, MALE
CN512	1-506-487-11	o	CONNECTOR 8P, MALE
CN513	1-506-483-21	o	CONNECTOR, 4P, MALE
CN514	1-580-542-11	o	CONNECTOR LY 26P, MALE
CNI15	1-526-816-21	s	SOCKET, IC (DP) 24P
CNI17	1-526-653-21	s	SOCKET, IC (DP) 14P
CNI17A	1-526-653-21	s	SOCKET, IC (DP) 14P
D1	8-719-918-88	s	DIODE 1SS198
D2	8-719-918-88	s	DIODE 1SS198

NOTE : Please see page 22-42 for the parts that are not listed in the parts list.

(SW-448 BOARD(DVR-2000/2100/BKDV-2010))

Ref. No. or Q'ty	Part No.	SP	Description
D3	8-719-918-88	s	DIODE 1SS198
D4	8-719-918-88	s	DIODE 1SS198
D5	8-719-918-88	s	DIODE 1SS198
D6	8-719-918-88	s	DIODE 1SS198
D7	8-719-918-88	s	DIODE 1SS198
D8	8-719-918-88	s	DIODE 1SS198
D9	8-719-918-88	s	DIODE 1SS198
D10	8-719-918-88	s	DIODE 1SS198
D11	8-719-918-88	s	DIODE 1SS198
D12	8-719-918-88	s	DIODE 1SS198
D13	8-719-905-55	s	LED EAA5504S, AMBER
D14	8-719-905-55	s	LED EAA5504S, AMBER
IC1	8-759-938-68	s	IC CXD1095Q
IC2	8-759-978-98	s	IC YM2413
IC3	8-759-135-80	s	IC UPC358C
IC4	8-759-903-86	s	IC LM386N
IC5	8-759-511-91	s	IC MB89254H-SOP
IC6	8-759-604-35	s	IC M5F78M05
IC7	8-759-008-57	s	IC MC34051P
IC8	8-759-926-48	s	IC SN74HC244NS
IC9	8-759-925-80	s	IC SN74HC14NS
IC10	8-759-925-80	s	IC SN74HC14NS
IC11	8-759-926-56	s	IC SN74HC273NS
IC12	8-759-926-56	s	IC SN74HC273NS
IC13	8-759-926-56	s	IC SN74HC273NS
IC14	8-759-926-56	s	IC SN74HC273NS
IC15	8-759-556-53	s	IC P20V8H-SW44815V1.0, PLD
IC16	8-759-926-48	s	IC SN74HC244NS
IC17	8-759-054-66	s	IC 5032DC-SW44817V1.0, PLD
IC18	8-759-925-80	s	IC SN74HC14NS
IC19	8-759-926-56	s	IC SN74HC273NS
Q1	8-729-900-53	s	TRANSISTOR DTC114EK
Q2	8-729-900-53	s	TRANSISTOR DTC114EK
Q3	8-729-900-53	s	TRANSISTOR DTC114EK
Q4	8-729-900-53	s	TRANSISTOR DTC114EK
Q5	8-729-900-53	s	TRANSISTOR DTC114EK
Q6	8-729-900-53	s	TRANSISTOR DTC114EK
Q7	8-729-900-53	s	TRANSISTOR DTC114EK
Q8	8-729-900-53	s	TRANSISTOR DTC114EK
Q9	8-729-900-53	s	TRANSISTOR DTC114EK
Q10	8-729-900-53	s	TRANSISTOR DTC114EK
Q11	8-729-900-53	s	TRANSISTOR DTC114EK
Q12	8-729-900-53	s	TRANSISTOR DTC114EK
Q13	8-729-900-53	s	TRANSISTOR DTC114EK
Q14	8-729-900-53	s	TRANSISTOR DTC114EK
Q15	8-729-900-53	s	TRANSISTOR DTC114EK
Q16	8-729-900-53	s	TRANSISTOR DTC114EK
Q17	8-729-900-53	s	TRANSISTOR DTC114EK
Q18	8-729-900-53	s	TRANSISTOR DTC114EK
Q19	8-729-900-53	s	TRANSISTOR DTC114EK
Q20	8-729-900-53	s	TRANSISTOR DTC114EK
Q21	8-729-900-53	s	TRANSISTOR DTC114EK
Q22	8-729-900-53	s	TRANSISTOR DTC114EK
Q23	8-729-900-53	s	TRANSISTOR DTC114EK
Q24	8-729-900-53	s	TRANSISTOR DTC114EK
Q25	8-729-900-53	s	TRANSISTOR DTC114EK
Q26	8-729-900-53	s	TRANSISTOR DTC114EK
Q27	8-729-900-53	s	TRANSISTOR DTC114EK

NOTE : For the parts marked # in the parts list, refer to "Section 23 Changed Parts".

(SW-448 BOARD(DVR-2000/2100/BKDV-2010))

Ref. No. or Q'ty	Part No.	SP	Description
Q28	8-729-900-53	s	TRANSISTOR DTC114EK
Q29	8-729-140-96	s	TRANSISTOR 2SD774-4
R1	1-215-409-00	s	METAL 330 1% 1/6W
R2	1-215-409-00	s	METAL 330 1% 1/6W
R3	1-215-415-00	s	METAL 560 1% 1/6W
R4	1-215-415-00	s	METAL 560 1% 1/6W
R5	1-215-417-00	s	METAL 680 1% 1/6W
R6	1-215-417-00	s	METAL 680 1% 1/6W
R7	1-215-408-00	s	METAL 300 1% 1/6W
R8	1-215-408-00	s	METAL 300 1% 1/6W
R9	1-215-408-00	s	METAL 300 1% 1/6W
R10	1-215-408-00	s	METAL 300 1% 1/6W
R11	1-215-408-00	s	METAL 300 1% 1/6W
R12	1-215-408-00	s	METAL 300 1% 1/6W
R13	1-215-408-00	s	METAL 300 1% 1/6W
R14	1-215-408-00	s	METAL 300 1% 1/6W
R15	1-215-408-00	s	METAL 300 1% 1/6W
R16	1-215-415-00	s	METAL 560 1% 1/6W
R17	1-215-429-00	s	METAL 2.2k 1% 1/6W
R18	1-215-429-00	s	METAL 2.2k 1% 1/6W
R19	1-215-453-00	s	METAL 22k 1% 1/6W
R20	1-215-453-00	s	METAL 22k 1% 1/6W
R22	1-215-460-00	s	METAL 43k 1% 1/6W
R23	1-215-445-00	s	METAL 10k 1% 1/6W
R24	1-215-463-00	s	METAL 56k 1% 1/6W
R26	1-215-443-00	s	METAL 8.2k 1% 1/6W
R27	1-215-373-31	s	METAL 10 1% 1/6W
R28	1-215-445-00	s	METAL 10k 1% 1/6W
R29	1-216-089-00	s	METAL, CHIP 47k 5% 1/10W
R30	1-215-445-00	s	METAL 10k 1% 1/6W
R31	1-216-065-00	s	METAL, CHIP 4.7k 5% 1/10W
R32	1-216-065-00	s	METAL, CHIP 4.7k 5% 1/10W
R33	1-216-065-00	s	METAL, CHIP 4.7k 5% 1/10W
R34	1-216-065-00	s	METAL, CHIP 4.7k 5% 1/10W
R35	1-216-065-00	s	METAL, CHIP 4.7k 5% 1/10W
R36	1-216-065-00	s	METAL, CHIP 4.7k 5% 1/10W
R37	1-216-065-00	s	METAL, CHIP 4.7k 5% 1/10W
R38	1-216-065-00	s	METAL, CHIP 4.7k 5% 1/10W
R39	1-216-089-00	s	METAL, CHIP 47k 5% 1/10W
R40	1-216-089-00	s	METAL, CHIP 47k 5% 1/10W
R41	1-216-089-00	s	METAL, CHIP 47k 5% 1/10W
R42	1-216-089-00	s	METAL, CHIP 47k 5% 1/10W
R43	1-216-089-00	s	METAL, CHIP 47k 5% 1/10W
R44	1-216-089-00	s	METAL, CHIP 47k 5% 1/10W
R45	1-216-089-00	s	METAL, CHIP 47k 5% 1/10W
R46	1-216-089-00	s	METAL, CHIP 47k 5% 1/10W
R47	1-215-405-00	s	METAL 220 1% 1/6W
R48	1-215-405-00	s	METAL 220 1% 1/6W
R49	1-215-421-00	s	METAL 1k 1% 1/6W
R50	1-215-453-00	s	METAL 22k 1% 1/6W
RB1	1-231-411-00	s	RESISTOR BLOCK 100kx8
RB2	1-231-411-00	s	RESISTOR BLOCK 100kx8
RB3	1-231-411-00	s	RESISTOR BLOCK 100kx8
RB4	1-231-411-00	s	RESISTOR BLOCK 100kx8
RB5	1-231-557-00	s	RESISTOR BLOCK 100kx4
S1	1-554-045-22	s	SWITCH, TACTILE, WITH LED
S2	1-554-039-21	s	SWITCH, TACTILE, WITH LED
S3	1-554-040-21	s	SWITCH, TACTILE, WITH LED

NOTE : Please see page 22-42 for the parts that are not listed in the parts list.

(SW-448 BOARD(DVR-2000/2100/BKDV-2010))

Ref. No. or Q'ty	Part No.	SP	Description
S4	1-554-041-41	s	SWITCH, TACTILE, WITH LED
S5	1-554-041-11	s	SWITCH, TACTILE, WITH LED
S6	1-554-041-11	s	SWITCH, TACTILE, WITH LED
S7	1-554-041-11	s	SWITCH, TACTILE, WITH LED
S8	1-554-041-21	s	SWITCH, TACTILE, WITH LED
S9	1-554-041-31	s	SWITCH, TACTILE, WITH LED
S10	1-554-041-11	s	SWITCH, TACTILE, WITH LED
S11	1-554-041-11	s	SWITCH, TACTILE, WITH LED
S12	1-554-041-11	s	SWITCH, TACTILE, WITH LED
SP1	1-503-299-00	s	SPEAKER

TR-43 BOARD(DVR-2000/2100)

Ref. No. or Q'ty	Part No.	SP	Description
CN317	1-506-486-11	o	CONNECTOR 7P, MALE
Q1	8-729-116-45	s	PHOTOTRANSISTOR PH110
Q2	8-729-116-45	s	PHOTOTRANSISTOR PH110
Q3	8-729-116-45	s	PHOTOTRANSISTOR PH110
Q4	8-729-116-45	s	PHOTOTRANSISTOR PH110
Q5	8-729-116-45	s	PHOTOTRANSISTOR PH110

NOTE : For the parts marked # in the parts list, refer to "Section 23 Changed Parts".

TR-83 BOARD(DVR-2000/2100)

Ref. No. or Q'ty	Part No.	SP	Description
1pc	1-645-687-11	o	PRINTED CIRCUIT BOARD,TR-83
C1	1-164-004-11	s	CERAMIC, CHIP 0.1uF 10% 25V
C2	1-164-004-11	s	CERAMIC, CHIP 0.1uF 10% 25V
C3	1-164-004-11	s	CERAMIC, CHIP 0.1uF 10% 25V
C4	1-164-004-11	s	CERAMIC, CHIP 0.1uF 10% 25V
C5	1-164-004-11	s	CERAMIC, CHIP 0.1uF 10% 25V
C6	1-164-004-11	s	CERAMIC, CHIP 0.1uF 10% 25V
C7	1-164-004-11	s	CERAMIC, CHIP 0.1uF 10% 25V
C8	1-164-004-11	s	CERAMIC, CHIP 0.1uF 10% 25V
CN1	1-566-085-11	s	CONNECTOR, 20P, MALE
CN3	1-566-085-11	s	CONNECTOR, 20P, MALE
CNI1	1-526-654-21	o	SOCKET,IC(DP)16P
CNI3	1-526-654-21	o	SOCKET,IC(DP)16P
IC1	8-759-510-71	s	IC BA10358F-E2
IC2	8-759-510-71	s	IC BA10358F-E2
IC3	8-759-510-71	s	IC BA10358F-E2
IC4	8-759-510-71	s	IC BA10358F-E2
#IC5	8-759-009-07	s	IC MC14053BF
#IC6	8-759-009-07	s	IC MC14053BF
D1	8-719-911-19	s	DIODE 1SS119
D2	8-719-911-19	s	DIODE 1SS119
D3	8-719-911-19	s	DIODE 1SS119
D4	8-719-911-19	s	DIODE 1SS119

NOTE : Please see page 22-42 for the parts that are not listed in the parts list.

VIO-15 BOARD(DVR-2000/2100)

Ref. No. or Q'ty	Part No.	SP	Description
#1pc	A-6021-015-B	o	MOUNTED CIRCUIT BOARD, VIO-15
6pcs	3-170-577-02	o	SCREW (UNC), D-SUB
C1	1-124-589-11	s	ELECT 47uF 20% 16V
C2	1-163-243-11	s	CERAMIC, CHIP 47pF 5% 50V
C3	1-163-243-11	s	CERAMIC, CHIP 47pF 5% 50V
C5	1-135-159-21	s	TANTALUM, CHIP 10uF 10% 20V
C9	1-163-121-00	s	CERAMIC, CHIP 150pF 5% 50V
C16	1-135-159-21	s	TANTALUM, CHIP 10uF 10% 20V
C17	1-163-121-00	s	CERAMIC, CHIP 150pF 5% 50V
C26	1-163-121-00	s	CERAMIC, CHIP 150pF 5% 50V
C27	1-124-589-11	s	ELECT 47uF 20% 16V
CN100	1-561-365-21	s	CONNECTOR, COAXIAL, MALE
#CN925	1-764-274-11	s	CONNECTOR, BNC FEMALE
#CN926	1-764-274-11	s	CONNECTOR, BNC FEMALE
#CN927	1-764-274-11	s	CONNECTOR, BNC FEMALE
#CN928	1-764-274-11	s	CONNECTOR, BNC FEMALE
#CN929	1-764-274-11	s	CONNECTOR, BNC FEMALE
#CN930	1-764-274-11	s	CONNECTOR, BNC FEMALE
#CN931	1-764-274-11	s	CONNECTOR, BNC FEMALE
CN932	1-563-891-21	s	CONNECTOR, D-SUB 25P, FEMALE
CN933	1-563-891-21	s	CONNECTOR, D-SUB 25P, FEMALE
CN934	1-563-891-21	s	CONNECTOR, D-SUB 25P, FEMALE
CN958	1-565-689-11	o	CONNECTOR, TX 60P, MALE
#CN961	1-764-274-11	s	CONNECTOR, BNC FEMALE
CN962	1-506-633-11	o	CONNECTOR, PS 8P
CN963	1-569-379-11	o	CONNECTOR, TX 40P, MALE
CNI9	1-540-192-11	s	SOCKET, IC (PGA) 37P
CNI10	1-540-192-11	s	SOCKET, IC (PGA) 37P
CNI11	1-540-192-11	s	SOCKET, IC (PGA) 37P
CNI12	1-540-192-11	s	SOCKET, IC (PGA) 37P
CP1	1-231-455-00	s	ENCAPSULATED COMPONENTS, CR
CP2	1-231-455-00	s	ENCAPSULATED COMPONENTS, CR
CP3	1-231-455-00	s	ENCAPSULATED COMPONENTS, CR
CP4	1-231-455-00	s	ENCAPSULATED COMPONENTS, CR
CP5	1-231-455-00	s	ENCAPSULATED COMPONENTS, CR
CP6	1-231-455-00	s	ENCAPSULATED COMPONENTS, CR
CP7	1-231-455-00	s	ENCAPSULATED COMPONENTS, CR
CP8	1-231-455-00	s	ENCAPSULATED COMPONENTS, CR
CP9	1-231-455-00	s	ENCAPSULATED COMPONENTS, CR
CP10	1-231-455-00	s	ENCAPSULATED COMPONENTS, CR
CP11	1-231-455-00	s	ENCAPSULATED COMPONENTS, CR
CP12	1-231-455-00	s	ENCAPSULATED COMPONENTS, CR
CP13	1-231-455-00	s	ENCAPSULATED COMPONENTS, CR
CP14	1-231-455-00	s	ENCAPSULATED COMPONENTS, CR
CP15	1-231-455-00	s	ENCAPSULATED COMPONENTS, CR
D1	8-719-820-23	s	DIODE 1SS269
IC1	8-759-012-00	s	IC MC10H116M
IC2	8-759-012-00	s	IC MC10H116M
IC3	8-759-012-00	s	IC MC10H116M
IC4	8-759-012-00	s	IC MC10H116M
IC5	8-759-012-00	s	IC MC10H116M
IC6	8-759-012-00	s	IC MC10H116M
IC7	8-759-012-00	s	IC MC10H116M
IC8	8-759-012-00	s	IC MC10H116M
#IC9	8-741-602-11	s	IC SBX1602A
IC10	8-741-601-11	s	IC SBX1601A
IC11	8-741-601-11	s	IC SBX1601A

NOTE : For the parts marked # in the parts list, refer to "Section 23 Changed Parts".

(VIO-15 BOARD(DVR-2000/2100))

Ref. No. or Q'ty	Part No.	SP	Description
IC12	8-741-601-11	s	IC SBX1601A
IC13	8-759-012-00	s	IC MC10H116M
IC14	8-759-012-00	s	IC MC10H116M
IC15	8-759-012-00	s	IC MC10H116M
IC16	8-759-012-00	s	IC MC10H116M
#JP1	1-566-388-11	s	CONNECTOR 8P, MALE
#JP2	1-566-388-11	s	CONNECTOR 8P, MALE
#JS1	1-563-859-11	s	PLUG, SHORTING
L1	1-410-184-51	s	INDUCTOR CHIP 0.22uH
L2	1-410-184-51	s	INDUCTOR CHIP 0.22uH
L3	1-410-184-51	s	INDUCTOR CHIP 0.22uH
Q1	8-729-216-22	s	TRANSISTOR 2SA1162
#Q2	8-729-120-28	s	TRANSISTOR 2SC1623-L5L6
Q3	8-729-143-46	s	TRANSISTOR 2SC3356-R24
Q4	8-729-143-46	s	TRANSISTOR 2SC3356-R24
Q5	8-729-143-46	s	TRANSISTOR 2SC3356-R24
Q6	8-729-143-46	s	TRANSISTOR 2SC3356-R24
Q7	8-729-143-46	s	TRANSISTOR 2SC3356-R24
Q8	8-729-143-46	s	TRANSISTOR 2SC3356-R24
Q9	8-729-143-46	s	TRANSISTOR 2SC3356-R24
Q10	8-729-143-46	s	TRANSISTOR 2SC3356-R24
Q11	8-729-120-28	s	TRANSISTOR 2SC1623-L5L6
Q12	8-729-143-46	s	TRANSISTOR 2SC3356-R24
Q13	8-729-143-46	s	TRANSISTOR 2SC3356-R24
Q14	8-729-216-22	s	TRANSISTOR 2SA1162
RB1	1-231-509-00	s	RESISTOR BLOCK 1kx4
RB2	1-231-405-00	s	RESISTOR BLOCK 1kx8
RV1	1-237-517-21	s	RES, ADJ METAL 5k
RV2	1-237-518-21	s	RES, ADJ METAL 10k

NOTE : Please see page 22-42 for the parts that are not listed in the parts list.

VIO-16 BOARD(DVR-2000/2100)

Ref. No. or Q'ty	Part No.	SP	Description
1pc	A-6021-016-A	o	MOUNTED CIRCUIT BOARD, VIO-16
#9pcs	7-623-954-01	s	WASHER 3.0, FIBER
#C1	1-163-243-11	s	CERAMIC, CHIP 47pF 5% 50V
C3	1-124-234-00	s	ELECT 22uF 20% 16V
C4	1-135-159-21	s	TANTALUM, CHIP 10uF 10% 20V
C5	1-163-243-11	s	CERAMIC, CHIP 47pF 5% 50V
C6	1-135-159-21	s	TANTALUM, CHIP 10uF 10% 20V
C16	1-124-234-00	s	ELECT 22uF 20% 16V
C17	1-124-234-00	s	ELECT 22uF 20% 16V
C28	1-124-589-11	s	ELECT 47uF 20% 16V
C29	1-124-589-11	s	ELECT 47uF 20% 16V
C32	1-124-589-11	s	ELECT 47uF 20% 16V
C33	1-124-589-11	s	ELECT 47uF 20% 16V
C34	1-164-232-11	s	CERAMIC, CHIP 0.01uF 10% 100V
#CN915	1-764-274-11	s	CONNECTOR, BNC FEMALE
#CN916	1-764-274-11	s	CONNECTOR, BNC FEMALE
#CN917	1-764-274-11	s	CONNECTOR, BNC FEMALE
#CN918	1-764-275-11	s	CONNECTOR, BNC FEMALE
#CN919	1-764-275-11	s	CONNECTOR, BNC FEMALE
#CN920	1-764-274-11	s	CONNECTOR, BNC FEMALE
#CN921	1-764-274-11	s	CONNECTOR, BNC FEMALE
#CN922	1-764-274-11	s	CONNECTOR, BNC FEMALE
CN961	1-561-365-21	s	CONNECTOR, COAXIAL, MALE
#CN964	1-764-274-11	s	CONNECTOR, BNC FEMALE
CN970	1-506-644-11	o	CONNECTOR, PS 30P, MALE
CNI1	1-540-192-11	s	SOCKET, IC (PGA) 37P
CNI5	1-526-856-11	s	SOCKET, IC (PGA) 133P
FB1	1-543-256-11	s	BEAD, FERRITE
FB2	1-543-256-11	s	BEAD, FERRITE
FB3	1-543-256-11	s	BEAD, FERRITE
FB5	1-543-256-11	s	BEAD, FERRITE
FB6	1-543-256-11	s	BEAD, FERRITE
#IC1	8-741-602-11	s	IC SBX1602A
IC2	8-759-012-13	s	IC MC10H125M
IC3	8-759-012-13	s	IC MC10H125M
IC4	8-759-012-13	s	IC MC10H125M
#IC5	8-759-164-99	s	IC CXD8069BG
IC6	8-759-012-02	s	IC MC10H124M
IC7	8-759-012-02	s	IC MC10H124M
IC8	8-752-054-77	s	IC CXA1570M
L1	1-408-417-00	s	INDUCTOR 47uH
L2	1-408-417-00	s	INDUCTOR 47uH
#Q1	8-729-120-28	s	TRANSISTOR 2SC1623-L5L6
Q2	8-729-143-46	s	TRANSISTOR 2SC3356-R24
Q3	8-729-143-46	s	TRANSISTOR 2SC3356-R24
R1	1-216-025-00	s	METAL, CHIP 100 5% 1/10W
R2	1-216-025-00	s	METAL, CHIP 100 5% 1/10W
R3	1-216-073-00	s	METAL, CHIP 10k 5% 1/10W
R4	1-216-073-00	s	METAL, CHIP 10k 5% 1/10W
R6	1-216-065-00	s	METAL, CHIP 4.7k 5% 1/10W
R7	1-216-049-00	s	METAL, CHIP 1k 5% 1/10W
R9	1-216-025-00	s	METAL, CHIP 100 5% 1/10W
R10	1-216-081-00	s	METAL, CHIP 22k 5% 1/10W
R11	1-216-025-00	s	METAL, CHIP 100 5% 1/10W
R12	1-216-068-00	s	METAL, CHIP 6.2k 5% 1/10W

NOTE : For the parts marked # in the parts list, refer to "Section 23 Changed Parts".

(VIO-16 BOARD(DVR-2000/2100))

Ref. No. or Q'ty	Part No.	SP	Description
R13	1-216-068-00	s	METAL, CHIP 6.2k 5% 1/10W
R14	1-216-021-00	s	METAL, CHIP 68 5% 1/10W
R15	1-216-025-00	s	METAL, CHIP 100 5% 1/10W
R17	1-216-057-00	s	METAL, CHIP 2.2k 5% 1/10W
R20	1-216-025-00	s	METAL, CHIP 100 5% 1/10W
R21	1-216-025-00	s	METAL, CHIP 100 5% 1/10W
R22	1-216-025-00	s	METAL, CHIP 100 5% 1/10W
R23	1-216-025-00	s	METAL, CHIP 100 5% 1/10W
R24	1-216-025-00	s	METAL, CHIP 100 5% 1/10W
R25	1-216-025-00	s	METAL, CHIP 100 5% 1/10W
R26	1-216-025-00	s	METAL, CHIP 100 5% 1/10W
R27	1-216-025-00	s	METAL, CHIP 100 5% 1/10W
R28	1-216-025-00	s	METAL, CHIP 100 5% 1/10W
R29	1-216-025-00	s	METAL, CHIP 100 5% 1/10W
R30	1-216-025-00	s	METAL, CHIP 100 5% 1/10W
R31	1-216-025-00	s	METAL, CHIP 100 5% 1/10W
R41	1-216-065-00	s	METAL, CHIP 4.7k 5% 1/10W
#R42	1-216-025-00	s	METAL, CHIP 100 5% 1/10W
RB1	1-231-405-00	s	RESISTOR BLOCK 1kx8
RB2	1-231-509-00	s	RESISTOR BLOCK 1kx4
RB3	1-235-452-11	s	RESISTOR BLOCK 330x4
RB4	1-235-452-11	s	RESISTOR BLOCK 330x4
RB5	1-235-452-11	s	RESISTOR BLOCK 330x4
RV1	1-228-459-00	s	RES, ADJ METAL 10k
S1	1-552-509-00	s	SWITCH, DIP 1-CKT

NOTE : Please see page 22-42 for the parts that are not listed in the parts list.

VN-03 BOARD(DVR-2000/2100)

Ref. No. or Q'ty	Part No.	SP	Description
#1pc	A-6019-044-C	o	MOUNTED CIRCUIT BOARD, VN-03
4pcs	1-526-659-00	o	SOCKET, IC 28P
1pc	1-526-856-11	s	SOCKET, IC (PGA) 133P
1pc	1-540-085-11	s	SOCKET, IC (PGA) 135P
2pcs	1-540-086-11	s	SOCKET, IC (PGA) 179P
3pcs	1-540-177-11	s	SOCKET, IC (PGA) 68P
1pc	1-540-207-11	s	SOCKET, IC (PGA)
1pc	3-171-895-31	o	LABEL (P), SERIAL NUMBER
1pc	3-172-037-01	o	LABEL (1), SERIAL NUMBER,VN-03
2pcs	3-714-634-01	o	LEVER, PC BOARD
2pcs	7-626-320-11	s	PIN, SPRING 3X8
2pcs	7-682-547-09	s	SCREW, +B 3x6
9pcs	7-682-948-01	s	SCREW, +PSW 3x8
4pcs	7-685-547-14	s	SCREW, +BVTP 3x10 TYPE2 N-S
C1	1-124-522-11	s	ELECT 270uF 20% 16V
C2	1-124-522-11	s	ELECT 270uF 20% 16V
C3	1-124-522-11	s	ELECT 270uF 20% 16V
C4	1-124-522-11	s	ELECT 270uF 20% 16V
C9	1-107-594-11	s	MICA 16pF 5% 500V
C10	1-131-381-00	s	TANTALUM 47uF 10% 10V
C11	1-130-495-00	s	MYLAR 0.1uF 5% 50V
C12	1-131-345-00	s	TANTALUM 0.47uF 10% 35V
C13	1-131-370-00	s	TANTALUM 6.8uF 10% 16V
CN2	1-560-313-00	o	CONNECTOR, IL 8P, MALE
CN509	1-565-207-21	s	CONNECTOR, DIN 128P, MALE
CN510	1-565-207-21	s	CONNECTOR, DIN 128P, MALE
CP1	1-231-455-00	s	ENCAPSULATED COMPONENTS, CR
D1	8-719-820-12	s	LED TLR224, RED
D2	8-719-911-19	s	DIODE 1SS119
ICA1	8-759-926-77	s	IC SN74HC541NS
ICA2	8-759-926-49	s	IC SN74HC245NS
ICA4	8-759-926-82	s	IC SN74HC574ANS
ICA5	8-759-926-82	s	IC SN74HC574ANS
ICA6	8-759-926-82	s	IC SN74HC574ANS
ICA8	8-759-926-49	s	IC SN74HC245NS
ICA9	8-759-926-82	s	IC SN74HC574ANS
ICA11	8-759-926-82	s	IC SN74HC574ANS
ICA12	8-759-012-13	s	IC MC10H125M
ICA18	8-759-012-02	s	IC MC10H124M
ICA19	8-759-012-02	s	IC MC10H124M
ICA20	8-759-012-02	s	IC MC10H124M
ICA22	8-759-012-02	s	IC MC10H124M
ICA23	8-759-012-02	s	IC MC10H124M
ICA25	8-759-012-02	s	IC MC10H124M
ICB1	8-759-926-77	s	IC SN74HC541NS
ICB2	8-759-926-49	s	IC SN74HC245NS
ICB4	8-759-926-69	s	IC SN74HC377ANS
ICB5	8-759-926-69	s	IC SN74HC377ANS
ICB6	8-759-926-69	s	IC SN74HC377ANS
ICB8	8-759-926-77	s	IC SN74HC541NS
ICB18	8-759-515-63	s	IC IDT74FCT821ATSO
ICB20	8-759-515-63	s	IC IDT74FCT821ATSO
ICB21	8-759-515-63	s	IC IDT74FCT821ATSO
ICB23	8-759-515-63	s	IC IDT74FCT821ATSO
ICB25	8-759-515-63	s	IC IDT74FCT821ATSO
ICC1	8-759-154-60	s	IC UPD71055GB-10-3B4

NOTE : For the parts marked # in the parts list, refer to "Section 23 Changed Parts".

(VN-03 BOARD(DVR-2000/2100))

Ref. No. or Q'ty	Part No.	SP	Description
ICC4	8-759-926-82	s	IC SN74HC574ANS
ICC5	8-759-926-82	s	IC SN74HC574ANS
ICC6	8-759-926-69	s	IC SN74HC377ANS
ICC8	8-759-926-69	s	IC SN74HC377ANS
ICC9	8-759-293-91	s	IC MSM514222B-30ZS
ICC10	8-759-293-91	s	IC MSM514222B-30ZS
ICC11	8-759-293-91	s	IC MSM514222B-30ZS
ICC12	8-759-293-91	s	IC MSM514222B-30ZS
ICC13	8-759-945-30	s	IC SN75ALS194N
ICC14	8-759-926-32	s	IC AM26LS32PC
ICC15	8-759-926-32	s	IC AM26LS32PC
ICC16	8-759-902-40	s	IC SN74LS240N
ICC17	8-759-902-40	s	IC SN74LS240N
ICC18	8-759-902-40	s	IC SN74LS240N
ICC19	8-759-917-72	s	IC 74F244PC
ICC20	8-759-293-91	s	IC MSM514222B-30ZS
ICC21	8-759-293-91	s	IC MSM514222B-30ZS
ICC22	8-759-293-91	s	IC MSM514222B-30ZS
ICC23	8-759-293-91	s	IC MSM514222B-30ZS
ICC24	8-759-293-91	s	IC MSM514222B-30ZS
ICC25	8-759-293-91	s	IC MSM514222B-30ZS
ICD1	8-759-517-88	s	IC CXD8094Q
ICD4	8-759-363-64	s	IC CY7C182-45PC
ICD9	8-759-293-91	s	IC MSM514222B-30ZS
ICD10	8-759-293-91	s	IC MSM514222B-30ZS
ICD11	8-759-293-91	s	IC MSM514222B-30ZS
ICD12	8-759-293-91	s	IC MSM514222B-30ZS
ICD13	8-759-926-77	s	IC SN74HC541NS
ICD15	8-759-926-77	s	IC SN74HC541NS
ICD16	8-759-926-77	s	IC SN74HC541NS
ICD18	8-759-926-77	s	IC SN74HC541NS
#ICD19	8-759-948-58	s	IC 74F244SJ
ICD20	8-759-244-85	s	IC TC74AC574F
ICD21	8-759-902-40	s	IC SN74LS240N
ICD5A	8-759-926-82	s	IC SN74HC574ANS
ICD5B	8-759-925-74	s	IC TC74HC04NS
ICD6A	8-759-926-77	s	IC SN74HC541NS
ICD6B	8-759-926-29	s	IC SN74HC175ANS
ICD8A	8-759-926-77	s	IC SN74HC541NS
ICD8B	8-759-925-85	s	IC SN74HC32NS
ICD23A	8-759-985-18	s	IC 74AC08SJ
ICD23B	8-759-985-17	s	IC 74AC04SJ
ICD25B	8-759-985-30	s	IC 74AC86SJ
ICE1	8-752-357-15	s	IC CXD2343S
ICE2	8-759-045-64	s	IC 7C225-VN0307-1, PROM
ICE3	8-759-147-02	s	IC UPD42101C-3
ICE4	8-759-147-02	s	IC UPD42101C-3
ICE7	8-759-044-86	s	IC CXD8225AG
ICE11	8-759-518-15	s	IC CXD8247Q
ICE13	8-759-518-71	s	IC TMS4C1060-40SD
ICE14	8-759-518-71	s	IC TMS4C1060-40SD
ICE17	8-759-517-83	s	IC CXD8124G
ICE24	8-759-045-63	s	IC 7C291L-VN0306-1, PROM
ICE25	8-752-357-15	s	IC CXD2343S
ICE5A	8-759-926-77	s	IC SN74HC541NS
ICE5B	8-759-926-77	s	IC SN74HC541NS
ICE21A	8-759-925-90	s	IC SN74HC74NS
ICE21B	8-759-926-69	s	IC SN74HC377ANS

NOTE : Please see page 22-42 for the parts that are not listed in the parts list.

(VN-03 BOARD(DVR-2000/2100))

Ref. No. or Q'ty	Part No.	SP	Description
ICE22A	8-759-985-15	s	IC 74AC02SJ
ICE22B	8-759-926-82	s	IC SN74HC574ANS
ICF2	8-759-519-12	s	IC CXD8281Q
ICF5	8-759-147-02	s	IC UPD42101C-3
#ICF7	8-759-948-58	s	IC 74F244SJ
ICF9	8-759-927-46	s	IC SN74HC00NS
ICF10	8-759-926-77	s	IC SN74HC541NS
ICF12	8-759-926-77	s	IC SN74HC541NS
ICF13	8-759-518-71	s	IC TMS4C1060-40SD
ICF14	8-759-518-71	s	IC TMS4C1060-40SD
ICF23	8-759-078-67	o	IC 7C291L-VN0305-4, PROM
ICF24	8-759-067-02	s	IC 7C291L-VN0304-3, PROM
ICF25	8-752-357-15	s	IC CXD2343S
ICF21A	8-759-926-69	s	IC SN74HC377ANS
ICF21B	8-759-925-74	s	IC TC74HC04NS
ICG6	8-759-926-77	s	IC SN74HC541NS
ICG8	8-759-926-77	s	IC SN74HC541NS
ICG11	8-752-341-30	s	IC CXD2210Q
ICG13	8-759-293-91	s	IC MSM514222B-30ZS
ICG14	8-759-293-91	s	IC MSM514222B-30ZS
ICG15	8-759-293-91	s	IC MSM514222B-30ZS
ICG16	8-759-293-91	s	IC MSM514222B-30ZS
ICG17	8-759-926-82	s	IC SN74HC574ANS
ICG19	8-759-926-82	s	IC SN74HC574ANS
ICG21	8-759-518-14	s	IC CXD8248Q
ICG23	8-759-926-08	s	IC SN74HC133NS
ICG25	8-759-926-08	s	IC SN74HC133NS
#ICH2	8-759-327-43	o	IC 27C512-VN0310-0206, EPROM
#ICH4	8-752-337-62	s	IC CXK58257ASP-10L
ICH5	8-759-147-02	s	IC UPD42101C-3
ICH6	8-759-147-02	s	IC UPD42101C-3
ICH8	8-759-147-02	s	IC UPD42101C-3
ICH11	8-752-341-30	s	IC CXD2210Q
ICH17	8-759-925-74	s	IC TC74HC04NS
ICH19	8-759-926-82	s	IC SN74HC574ANS
ICJ1	8-759-045-60	s	IC 7C291L-VN0301-1, PROM
ICJ3	8-759-973-43	s	IC MB8421-90LPFQ
ICJ7	8-759-150-97	s	IC CXD8068G
#ICJ10	8-759-948-58	s	IC 74F244SJ
#ICJ12	8-759-948-58	s	IC 74F244SJ
#ICJ13	8-759-173-72	o	IC 5032PC-VN0313-2, PLD
#ICJ14	8-752-337-62	s	IC CXK58257ASP-10L
#ICJ15	8-759-327-42	o	IC 27C512-VN0311-0300, EPROM
ICJ17	8-759-293-91	s	IC MSM514222B-30ZS
ICJ18	8-759-293-91	s	IC MSM514222B-30ZS
ICJ19	8-759-293-91	s	IC MSM514222B-30ZS
ICJ21	8-759-518-14	s	IC CXD8248Q
ICJ24	8-759-517-87	s	IC CXD8093Q
#ICJ5A	8-759-948-58	s	IC 74F244SJ
ICJ5B	8-759-081-86	o	IC 5032PC-VN0309-2, PLD
ICK10	8-759-145-65	s	IC UPD6451C
ICK12	8-752-324-62	s	IC CXK5863P-35
ICK13	8-759-517-88	s	IC CXD8094Q
ICK16	8-759-363-64	s	IC CY7C182-45PC
ICK17	8-759-293-91	s	IC MSM514222B-30ZS
ICK18	8-759-293-91	s	IC MSM514222B-30ZS
ICK19	8-759-293-91	s	IC MSM514222B-30ZS

NOTE : For the parts marked # in the parts list, refer to "Section 23 Changed Parts".

(VN-03 BOARD(DVR-2000/2100))

Ref. No. or Q'ty	Part No.	SP	Description
ICK25	8-759-147-02	s	IC UPD42101C-3
ICL1	8-759-986-61	s	IC 74ACT573SJ
ICL3	8-759-973-43	s	IC MB8421-90LPFQ
ICL5	8-759-986-61	s	IC 74ACT573SJ
ICL7	8-759-517-84	s	IC CXD8249Q
#ICL10	8-759-948-58	s	IC 74F244SJ
ICL17	8-759-147-02	s	IC UPD42101C-3
ICL18	8-759-147-02	s	IC UPD42101C-3
ICL19	8-759-147-02	s	IC UPD42101C-3
ICL22	8-759-517-86	s	IC CXD8251G
ICM5	8-759-986-61	s	IC 74ACT573SJ
ICM10	8-759-986-61	s	IC 74ACT573SJ
ICM12	8-759-986-61	s	IC 74ACT573SJ
ICM13	8-759-244-77	s	IC TC74ACT541F
ICM15	8-759-925-74	s	IC TC74HC04NS
ICM16	8-759-147-02	s	IC UPD42101C-3
ICM25	8-759-147-02	s	IC UPD42101C-3
ICN2	8-759-154-64	s	IC UPD70208R-10
ICN5	8-759-986-33	s	IC 74ACT245SJ
ICN6	8-759-925-72	s	IC SN74HC02NS
ICN7	8-759-925-74	s	IC TC74HC04NS
ICN9	8-759-239-58	s	IC TC74HC221AF
ICN10	8-759-925-90	s	IC SN74HC74NS
ICN12	8-759-986-61	s	IC 74ACT573SJ
ICN13	8-759-986-33	s	IC 74ACT245SJ
ICN15	8-759-925-85	s	IC SN74HC32NS
ICN17	8-759-293-91	s	IC MSM514222B-30ZS
ICN18	8-759-293-91	s	IC MSM514222B-30ZS
ICN19	8-759-293-91	s	IC MSM514222B-30ZS
ICN22	8-759-517-85	s	IC CXD8250G
ICN25	8-759-147-02	s	IC UPD42101C-3
ICP4	8-759-081-85	o	IC 5032PC-VN0308-1, PLD
#ICP5	8-752-337-62	s	IC CXK58257ASP-10L
ICP6	8-759-553-07	s	IC AT28C64-15PC
#ICP8	8-759-327-41	o	IC 27C512-VN0312-0300, EPROM
ICP9	8-759-045-62	s	IC 7C291L-VN0303-1, PROM
ICP10	8-759-045-61	s	IC 7C291L-VN0302-1, PROM
ICP12	8-759-154-64	s	IC UPD70208R-10
ICP15	8-759-945-30	s	IC SN75ALS194N
ICP16	8-759-945-30	s	IC SN75ALS194N
ICP17	8-759-293-91	s	IC MSM514222B-30ZS
ICP18	8-759-293-91	s	IC MSM514222B-30ZS
ICP19	8-759-293-91	s	IC MSM514222B-30ZS
ICP2B	8-759-243-47	s	IC TC74ACT04F
ICP3A	8-759-244-77	s	IC TC74ACT541F
ICP3B	8-759-925-76	s	IC SN74HC08NS
ICQ2	8-759-154-64	s	IC UPD70208R-10
ICQ5	8-759-986-33	s	IC 74ACT245SJ
ICQ6	8-759-986-61	s	IC 74ACT573SJ
ICQ7	8-759-986-61	s	IC 74ACT573SJ
ICQ8	8-759-986-61	s	IC 74ACT573SJ
ICQ9	8-759-244-77	s	IC TC74ACT541F
ICQ11	8-759-154-60	s	IC UPD71055GB-10-3B4
ICQ13	8-759-154-60	s	IC UPD71055GB-10-3B4
ICQ15	8-759-951-89	s	IC SN75189AN
ICQ17	8-759-926-77	s	IC SN74HC541NS
ICQ19	8-759-926-52	s	IC SN74HC257NS

NOTE : Please see page 22-42 for the parts that are not listed in the parts list.

(VN-03 BOARD(DVR-2000/2100))

Ref. No. or Q'ty	Part No.	SP	Description
ICQ20	8-759-147-02	s	IC UPD42101C-3
ICQ21	8-759-147-02	s	IC UPD42101C-3
ICQ22	8-759-147-02	s	IC UPD42101C-3
ICQ23	8-759-147-02	s	IC UPD42101C-3
ICR24	8-759-939-36	s	IC TL7705ACP
L1	1-460-085-11	s	COIL, CHOKE 6.8UH
L2	1-460-085-11	s	COIL, CHOKE 6.8UH
L3	1-460-085-11	s	COIL, CHOKE 6.8UH
L6	1-410-462-11	s	INDUCTOR 2.2uH
R1	1-215-407-00	s	METAL 270 1% 1/6W
R2	1-215-407-00	s	METAL 270 1% 1/6W
R3	1-215-407-00	s	METAL 270 1% 1/6W
R4	1-215-421-00	s	METAL 1k 1% 1/6W
R5	1-215-421-00	s	METAL 1k 1% 1/6W
R7	1-215-397-00	s	METAL 100 1% 1/6W
R11	1-215-421-00	s	METAL 1k 1% 1/6W
R12	1-215-421-00	s	METAL 1k 1% 1/6W
R13	1-215-421-00	s	METAL 1k 1% 1/6W
R14	1-215-421-00	s	METAL 1k 1% 1/6W
R15	1-215-461-00	s	METAL 47k 1% 1/6W
R16	1-215-461-00	s	METAL 47k 1% 1/6W
R17	1-215-461-00	s	METAL 47k 1% 1/6W
R18	1-215-397-00	s	METAL 100 1% 1/6W
R19	1-215-461-00	s	METAL 47k 1% 1/6W
R20	1-215-397-00	s	METAL 100 1% 1/6W
R21	1-215-409-00	s	METAL 330 1% 1/6W
R22	1-215-421-00	s	METAL 1k 1% 1/6W
R23	1-215-461-00	s	METAL 47k 1% 1/6W
R24	1-215-461-00	s	METAL 47k 1% 1/6W
R25	1-215-445-00	s	METAL 10k 1% 1/6W
R26	1-215-407-00	s	METAL 270 1% 1/6W
R27	1-215-407-00	s	METAL 270 1% 1/6W
R28	1-215-407-00	s	METAL 270 1% 1/6W
R29	1-215-407-00	s	METAL 270 1% 1/6W
RB1	1-235-005-00	s	RESISTOR BLOCK 47kx8
RB2	1-235-005-00	s	RESISTOR BLOCK 47kx8
RB3	1-235-005-00	s	RESISTOR BLOCK 47kx8
RB4	1-235-005-00	s	RESISTOR BLOCK 47kx8
RB5	1-235-005-00	s	RESISTOR BLOCK 47kx8
RB6	1-235-005-00	s	RESISTOR BLOCK 47kx8
RB7	1-235-005-00	s	RESISTOR BLOCK 47kx8
RB8	1-235-005-00	s	RESISTOR BLOCK 47kx8
RB9	1-235-005-00	s	RESISTOR BLOCK 47kx8
RB10	1-235-005-00	s	RESISTOR BLOCK 47kx8
RB11	1-235-005-00	s	RESISTOR BLOCK 47kx8
RB12	1-235-005-00	s	RESISTOR BLOCK 47kx8
RB13	1-235-005-00	s	RESISTOR BLOCK 47kx8
RB14	1-235-005-00	s	RESISTOR BLOCK 47kx8
RB15	1-235-005-00	s	RESISTOR BLOCK 47kx8
RB16	1-235-005-00	s	RESISTOR BLOCK 47kx8
RB17	1-235-005-00	s	RESISTOR BLOCK 47kx8
RB18	1-235-005-00	s	RESISTOR BLOCK 47kx8
RB19	1-231-399-00	s	RESISTOR BLOCK 330x8
RB20	1-231-399-00	s	RESISTOR BLOCK 330x8
RB21	1-231-399-00	s	RESISTOR BLOCK 330x8
RB22	1-231-399-00	s	RESISTOR BLOCK 330x8
RB23	1-231-399-00	s	RESISTOR BLOCK 330x8
RB24	1-231-399-00	s	RESISTOR BLOCK 330x8

NOTE : For the parts marked # in the parts list, refer to "Section 23 Changed Parts".

(VN-03 BOARD(DVR-2000/2100))

Ref. No. or Q'ty	Part No.	SP	Description
RB25	1-235-005-00	s	RESISTOR BLOCK 47kx8
RB26	1-235-005-00	s	RESISTOR BLOCK 47kx8
RB27	1-235-005-00	s	RESISTOR BLOCK 47kx8
RB28	1-235-005-00	s	RESISTOR BLOCK 47kx8
RB29	1-235-005-00	s	RESISTOR BLOCK 47kx8
RB30	1-235-005-00	s	RESISTOR BLOCK 47kx8
RB31	1-235-005-00	s	RESISTOR BLOCK 47kx8
RB32	1-235-005-00	s	RESISTOR BLOCK 47kx8
RB33	1-235-005-00	s	RESISTOR BLOCK 47kx8
RB34	1-235-005-00	s	RESISTOR BLOCK 47kx8
RB35	1-235-005-00	s	RESISTOR BLOCK 47kx8
RB36	1-235-005-00	s	RESISTOR BLOCK 47kx8
RB37	1-231-398-00	s	RESISTOR BLOCK 270x8
RB38	1-231-398-00	s	RESISTOR BLOCK 270x8
RV1	1-237-517-21	s	RES, ADJ METAL 5k
S1	1-553-856-00	s	SWITCH, TACTILE
X1	1-577-541-11	s	OSCILLATOR, CRYSTAL (IC TYPE)

VR-106 BOARD(DVR-2000/2100)

Ref. No. or Q'ty	Part No.	SP	Description
1pc	A-6025-182-A	o	MOUNTED CIRCUIT BOARD, VR-106
C1	1-104-665-11	s	ELECT 100uF 20% 25V
C2	1-104-665-11	s	ELECT 100uF 20% 25V
C3	1-162-806-11	s	CERAMIC 0.1uF 10% 50V
C4	1-162-806-11	s	CERAMIC 0.1uF 10% 50V
C5	1-164-079-11	s	CERAMIC 330PF 10% 50V
C6	1-164-079-11	s	CERAMIC 330PF 10% 50V
C7	1-124-589-11	s	ELECT 47uF 20% 16V
CN381	1-506-637-11	o	CONNECTOR, PS 16P, MALE
D1	8-719-911-19	s	DIODE 1SS119
FB1	1-535-178-00	s	BEAD, FERRITE
FB2	1-535-178-00	s	BEAD, FERRITE
FB3	1-535-178-00	s	BEAD, FERRITE
IC1	8-759-602-19	s	IC M5220L
Q1	8-729-900-36	s	TRANSISTOR DTC124ES
Q2	8-729-900-65	s	TRANSISTOR DTA144ES
R1	1-249-409-11	s	CARBON 220 5% 1/4W
R2	1-249-417-11	s	CARBON 1K 5% 1/4W
R3	1-249-417-11	s	CARBON 1K 5% 1/4W
R4	1-247-855-31	s	CARBON 10K 5% 1/4W
R5	1-247-862-11	s	CARBON 20K 5% 1/4W
R6	1-249-401-11	s	CARBON 47 5% 1/4W
R7	1-247-855-31	s	CARBON 10K 5% 1/4W
R8	1-247-862-11	s	CARBON 20K 5% 1/4W
R9	1-249-401-11	s	CARBON 47 5% 1/4W
RV1	1-241-735-11	s	RES, VAR, CARBON 10/10K
RY1	1-515-683-11	s	RELAY

VR-107 BOARD(DVR-2000/2100)

Ref. No. or Q'ty	Part No.	SP	Description
1pc	1-639-135-11	o	PRINTED CIRCUIT BOARD, VR-107
CN382	1-506-482-11	o	CONNECTOR 3P, MALE
J1	1-507-854-00	s	JACK, PHONE

NOTE : Please see page 22-42 for the parts that are not listed in the parts list.

NOTE : For the parts marked # in the parts list, refer to "Section 23 Changed Parts".

FRAME(DVR-2000/2100)

Ref. No. or Q'ty	Part No.	SP	Description
1pc	A-6050-856-B	s	DRUM ASSY, DDH-02A-R (Included scanner assy, brush slip ring assy and d cover assy. This is used only for DVR-2100.)
1pc	A-6050-857-B	s	DRUM ASSY(INNER), DDR-02-R (This is used only for DVR-2100.)
1pc	A-6050-858-A	s	DRUM ASSY, DDL-02A-R (Not included scanner assy, brush slip ring assy a drum cover assy.)
1pc	A-6050-859-A	s	RING ASSY(RP), BRUSH SLIP (This is used only for DVR-2100.)
1pc	A-6050-864-B	s	DRUM ASSY, DDH-03A-R (Included scanner assy and drum cover assy. This used only for DVR-2000.)
1pc	A-6050-865-B	s	DRUM ASSY(INNER), DDR-03-R (This is used only for DVR-2000.)
1pc	⚠ 1-424-532-12	s	FILTER, NOISE (AC INLET TYPE)
1pc	1-535-316-11	o	TERMINAL, GROUND (M4)
1pc	⚠ 1-535-446-00	o	TERMINAL, FASTEN
1pc	1-543-590-11	s	CORE, TROIDAL
1pc	1-574-872-11	s	WIRE, FLEXIBLE CARD 4P This cable has the following connectors. CN30F(to PC-52 BOARD) CN40F(to PC-53 BOARD)
1pc	1-574-873-11	s	WIRE, FLEXIBLE CARD 10P This cable has the following connectors. CN10F(to PC-50 BOARD) CN20F(to PC-51 BOARD)
1pc	⚠ 1-576-037-11	s	BREAKER, CIRCUIT 8A 250V
2pcs	1-586-998-11	s	FLEXIBLE CARD WIRE 32P
1pc	1-639-150-11	o	PRINTED CIRCUIT BOARD, FL-122
1pc	1-806-682-00	s	SENSOR, CONDENSATION
1pc	1-948-566-11	s	HARNESS (RPM-12) This cable has the following connectors. CN514F(to MB-286 BOARD) CN963F(to VIO-15 BOARD)
1pc	1-948-567-11	s	HARNESS (RPM-13) This cable has the following connectors. CN515F(to MB-286 BOARD) CN958F(to VIO-15 BOARD)
1pc	1-948-570-12	s	HARNESS (RPM-16) This cable has the following connectors. CN519F(to MB-286 BOARD) CN952F(to IF-276 BOARD)
1pc	1-948-572-11	s	HARNESS (RPM-18) This cable has the following connectors. CN516F(to MB-286 BOARD) CN951F(to ASW-22 BOARD)
1pc	1-948-586-11	s	HARNESS (SEN-11) This cable has the following connectors. CN741F(to SE-144 BOARD) CN742F(to CN-508 BOARD)
CN1F(to DRUM MOTOR)			
	1-569-199-11	o	HOUSING, 6P
	1-569-194-11	o	CONTACT, FEMALE AWG24-30

NOTE : Please see page 22-42 for the parts that are not listed in the parts list.

(FRAME(DVR-2000/2100))

Ref. No. or Q'ty	Part No.	SP	Description
CN1F(to AH-24 BOARD)			
	1-569-199-11	o	HOUSING, 6P
	1-569-194-11	o	CONTACT, FEMALE AWG24-30
CN2F(to DRUM MOTOR)			
	1-569-201-11	o	HOUSING, 8P
	1-569-194-11	o	CONTACT, FEMALE AWG24-30
CN2F(to AH-24 BOARD)			
	1-569-195-11	o	HOUSING, 2P
	1-569-194-11	o	CONTACT, FEMALE AWG24-30
CN3F(to DRUM MOTOR)			
	1-563-117-11	o	HOUGING, PS 6P
	1-563-115-11	o	CONTACT, FEMALE AWG24-28
CN3F(to AH-24 BOARD)			
	1-569-195-11	o	HOUSING, 2P
	1-569-194-11	o	CONTACT, FEMALE AWG24-30
CN4F(to AH-24 BOARD)			
	1-569-195-11	o	HOUSING, 2P
	1-569-194-11	o	CONTACT, FEMALE AWG24-30
CN4F(to HEAD DRUM)			
	1-580-596-11	s	HOUSING, CONNECTOR 40P
	1-580-599-11	o	CONTACT, LY, FEMALE AWG26-30
CN102F(to PS-256 BOARD)			
	⚠ 1-561-084-00	o	HOUSING, 4P
	⚠ 1-561-068-00	o	CONTACT, MALE AWG14-20
CN103F(to PS-256 BOARD)			
	⚠ 1-561-072-00	o	HOUSING, 9P
	⚠ 1-561-067-00	o	CONTACT, FEMALE AWG14-20
CN104F(to PS-256 BOARD)			
	1-509-984-00	o	HOUSING, IL 3P
	1-560-298-11	o	CONTACT, FEMALE
CN105F(to PS-256 BOARD)			
	1-563-124-11	o	HOUSING, PS 20P
	1-563-115-11	o	CONTACT, FEMALE AWG24-28
CN106F(to PS-256 BOARD)			
	1-563-124-11	o	HOUSING, PS 20P
	1-563-115-11	o	CONTACT, FEMALE AWG24-28
CN107F(to PS-256 BOARD)			
	1-563-119-11	o	HOUSING, PS 10P
	1-563-115-11	o	CONTACT, FEMALE AWG24-28
CN108F(to PS-256 BOARD)			
	1-563-116-11	o	HOUSING, PS 4P
	1-563-115-11	o	CONTACT, FEMALE AWG24-28
CN109F(to PS-256 BOARD)			
	1-509-984-00	o	HOUSING, IL 3P
	1-560-298-00	o	CONTACT, IL, FEMALE AWG22-28
CN110F(to PS-256 BOARD)			
	1-509-985-00	o	HOUSING, IL 4P
	1-560-298-00	o	CONTACT, IL, FEMALE AWG22-28
CN111F(to PS-256 BOARD)			
	1-509-984-00	o	HOUSING, IL 3P
	1-560-298-00	o	CONTACT, IL, FEMALE AWG22-28
CN112F(to PS-256 BOARD)			
	1-509-988-00	o	HOUSING, IL 8P

NOTE : For the parts marked # in the parts list, refer to "Section 23 Changed Parts".

(FRAME(DVR-2000/2100))

Ref. No. or Q'ty	Part No.	SP	Description
	1-560-298-00	o	CONTACT, IL, FEMALE AWG22-28
CN119F(to PS-256 BOARD)			
	1-509-988-00	o	HOUSING, IL 8P
	1-560-298-00	o	CONTACT, IL, FEMALE AWG22-28
CN120F(to PS-256 BOARD)			
	1-509-988-00	o	HOUSING, IL 8P
	1-560-298-00	o	CONTACT, IL, FEMALE AWG22-28
CN121F(to CT-133 BOARD)			
	1-509-985-00	o	HOUSING, IL 4P
	1-560-298-00	o	CONTACT, IL, FEMALE AWG22-28
CN122F(to CT-133 BOARD)			
	1-509-984-00	o	HOUSING, IL 3P
	1-560-298-00	o	CONTACT, IL, FEMALE AWG22-28
CN123F(to CT-133 BOARD)			
	1-509-988-00	o	HOUSING, IL 8P
	1-560-298-00	o	CONTACT, IL, FEMALE AWG22-28
CN124F(to CT-133 BOARD)			
	1-509-984-00	o	HOUSING, IL 3P
	1-560-298-00	o	CONTACT, IL, FEMALE AWG22-28
CN307F(to CN-481 BOARD)			
	1-563-125-11	o	HOUSING, PS 22P
	1-563-115-11	o	CONTACT, FEMALE AWG24-28
CN310F(to CN-481 BOARD)			
	1-563-125-11	o	HOUSING, PS 22P
	1-563-115-11	o	CONTACT, FEMALE AWG24-28
CN314F(to PC-64 BOARD)			
	1-569-197-11	o	HOUSING, 4P
	1-569-194-11	o	CONTACT, FEMALE AWG24-30
CN315F(to PC-64 BOARD)			
	1-569-197-11	o	HOUSING, 4P
	1-569-194-11	o	CONTACT, FEMALE AWG24-30
CN316F(to PC-60 BOARD)			
	1-569-197-11	o	HOUSING, 4P
	1-569-194-11	o	CONTACT, FEMALE AWG24-30
CN317F(to TR-43 BOARD)			
	1-569-200-11	o	HOUSING, 7P
	1-569-194-11	o	CONTACT, FEMALE AWG24-30
CN319F(to PC-52 BOARD)			
	1-562-150-11	o	HOUSING, 5P
	1-563-088-11	o	CONTACT, FEMALE, AWG24-30
CN324F(to PC-42 BOARD)			
	1-569-196-11	o	HOUSING, 3P
	1-569-194-11	o	CONTACT, FEMALE AWG24-30
CN325F(to PC-42 BOARD)			
	1-569-196-11	o	HOUSING, 3P
	1-569-194-11	o	CONTACT, FEMALE AWG24-30
CN326F(to PC-42 BOARD)			
	1-569-196-11	o	HOUSING, 3P
	1-569-194-11	o	CONTACT, FEMALE AWG24-30
CN327F(to PC-42 BOARD)			
	1-569-196-11	o	HOUSING, 3P
	1-569-194-11	o	CONTACT, FEMALE AWG24-30

NOTE : Please see page 22-42 for the parts that are not listed in the parts list.

(FRAME(DVR-2000/2100))

Ref. No. or Q'ty	Part No.	SP	Description
CN356F(to SE-144 BOARD)			
	1-563-124-11	o	HOUSING, PS 20P
	1-563-115-11	o	CONTACT, FEMALE AWG24-28
CN362F(to PC-42 BOARD)			
	1-569-196-11	o	HOUSING, 3P
	1-569-194-11	o	CONTACT, FEMALE AWG24-30
CN364F(to PC-42 BOARD)			
	1-569-196-11	o	HOUSING, 3P
	1-569-194-11	o	CONTACT, FEMALE AWG24-30
CN365F(to PC-42 BOARD)			
	1-569-196-11	o	HOUSING, 3P
	1-569-194-11	o	CONTACT, FEMALE AWG24-30
CN370F(to LE-77 BOARD)			
	1-569-201-11	o	HOUSING, 8P
	1-569-194-11	o	CONTACT, FEMALE AWG24-30
CN373F(to CN-401 BOARD)			
	1-569-196-11	o	HOUSING, 3P
	1-569-194-11	o	CONTACT, FEMALE AWG24-30
CN374F(to PD-49 BOARD)			
	1-563-118-11	o	CONNECTOR, PS 8P
	1-563-115-11	o	CONTACT, FEMALE AWG24-28
CN375F(to CN-401 BOARD)			
	1-569-199-11	o	HOUSING, 6P
	1-569-194-11	o	CONTACT, FEMALE AWG24-30
CN376F(to MT-47 BOARD)			
	1-563-116-11	o	HOUSING, PS 4P
	1-563-115-11	o	CONTACT, FEMALE AWG24-28
CN377F(to MT-47 BOARD)			
	1-563-116-11	o	HOUSING, PS 4P
	1-563-115-11	o	CONTACT, FEMALE AWG24-28
CN378F(to PD-49 BOARD)			
	1-569-197-11	o	HOUSING, 4P
	1-569-194-11	o	CONTACT, FEMALE AWG24-30
CN379F(to PD-49 BOARD)			
	1-509-984-00	o	HOUSING, IL 3P
	1-560-298-00	o	CONTACT, IL, FEMALE AWG22-28
CN380F(to PE-18 BOARD)			
	1-569-195-11	s	HOUSING, 2P
	1-569-194-11	o	CONTACT, FEMALE AWG24-30
CN381F(to VR-106 BOARD)			
	1-563-122-11	o	HOUSING, PS 16P
	1-563-115-11	o	CONTACT, FEMALE AWG24-28
CN382F(to VR-107 BOARD)			
	1-569-196-11	o	HOUSING, 3P
	1-569-194-11	o	CONTACT, FEMALE AWG24-30
CN383F(to FP-33 BOARD)			
	1-563-119-11	o	HOUSING, PS 10P
	1-563-115-11	o	CONTACT, FEMALE AWG24-28
CN384(to CONTROL PANEL)			
	1-563-769-11	s	CONNECTOR, 8P, FEMALE
CN386F(to CN-401 BOARD)			
	1-569-194-11	o	TERMINAL, SOLDERLESS
	1-569-195-11	s	HOUSING, 2P

NOTE : For the parts marked # in the parts list, refer to "Section 23 Changed Parts".

(FRAME(DVR-2000/2100))

Ref. No. or Q'ty	Part No.	SP	Description
CN387F(to CN-401 BOARD)			
	1-569-195-11	s	HOUSING, 2P
	1-569-194-11	o	CONTACT, FEMALE AWG24-30
CN388F(to PD-49 BOARD)			
	1-569-196-11	o	HOUSING, 3P
	1-569-194-11	o	CONTACT, FEMALE AWG24-30
CN389F(to CN-401 BOARD)			
	1-563-116-11	o	HOUSING, PS 4P
	1-563-115-11	o	CONTACT, FEMALE AWG24-28
CN390F(to PC-50 BOARD)			
	1-562-154-11	o	HOUSING, 9P
	1-563-088-11	o	CONTACT, FEMALE, AWG24-30
CN391F(to AH-33 BOARD)			
	1-569-195-11	s	HOUSING, 2P
	1-569-194-11	o	CONTACT, FEMALE AWG24-30
CN396F(to CN-581 BOARD)			
	1-569-197-11	o	HOUSING, 4P
	1-569-194-11	o	CONTACT, FEMALE AWG24-30
CN397F(to DE-38 BOARD)			
	1-569-197-11	o	HOUSING, 4P
	1-569-194-11	o	CONTACT, FEMALE AWG24-30
CN412F(to CAPSTAN MOTOR)			
	1-569-201-11	o	HOUSING, 8P
	1-569-194-11	o	CONTACT, FEMALE AWG24-30
CN424F(to HEAD DRUM)			
	1-569-196-11	o	HOUSING, 3P
	1-569-194-11	o	CONTACT, FEMALE AWG24-30
CN517F(to MB-286 BOARD)			
	1-563-129-11	o	HOUSING, PS 30P
	1-563-115-11	o	CONTACT, FEMALE AWG24-28
CN518F(to MB-286 BOARD)			
	1-563-124-11	o	HOUSING, PS 20P
	1-563-115-11	o	CONTACT, FEMALE AWG24-28
CN520F(to MB-286 BOARD)			
	1-563-117-11	o	HOUGING, PS 6P
	1-563-115-11	o	CONTACT, FEMALE AWG24-28
CN521F(to MB-286 BOARD)			
	1-563-119-11	o	HOUSING, PS 10P
	1-563-115-11	o	CONTACT, FEMALE AWG24-28
CN522F(to MB-286 BOARD)			
	1-563-119-11	o	HOUSING, PS 10P
	1-563-115-11	o	CONTACT, FEMALE AWG24-28
CN524F(to MB-286 BOARD)			
	1-563-124-11	o	HOUSING, PS 20P
	1-563-115-11	o	CONTACT, FEMALE AWG24-28
CN525F(to MB-286 BOARD)			
	1-563-119-11	o	HOUSING, PS 10P
	1-563-115-11	o	CONTACT, FEMALE AWG24-28
CN526F(to MB-286 BOARD)			
	1-563-116-11	o	HOUSING, PS 4P
	1-563-115-11	o	CONTACT, FEMALE AWG24-28
CN528F(to MB-286 BOARD)			

NOTE : Please see page 22-42 for the parts that are not listed in the parts list.

(FRAME(DVR-2000/2100))

Ref. No. or Q'ty	Part No.	SP	Description
	1-563-129-11	o	HOUSING, PS 30P
	1-563-115-11	o	CONTACT, FEMALE AWG24-28
CN529F(to MB-286 BOARD)			
	1-563-122-11	o	HOUSING, PS 16P
	1-563-115-11	o	CONTACT, FEMALE AWG24-28
CN530F(to MB-286 BOARD)			
	1-563-126-11	o	HOUSING, PS 24P
	1-563-115-11	o	CONTACT, FEMALE AWG24-28
CN531F(to MB-286 BOARD)			
	1-563-126-11	o	HOUSING, PS 24P
	1-563-115-11	o	CONTACT, FEMALE AWG24-28
CN532F(to MB-286 BOARD)			
	1-561-515-00	o	PLUG, HOUSING, ILG 3P
	1-506-740-11	o	CONTACT, FEMALE AWG22-28
CN533F(to MB-286 BOARD)			
	1-561-515-00	o	PLUG, HOUSING, ILG 3P
	1-506-740-11	o	CONTACT, FEMALE AWG22-28
CN534F(to MB-286 BOARD)			
	1-561-515-00	o	PLUG, HOUSING, ILG 3P
	1-506-740-11	o	CONTACT, FEMALE AWG22-28
CN535F(to MB-286 BOARD)			
	1-561-519-00	o	PLUG, HOUSING, ILG 8P
	1-506-740-11	o	CONTACT, FEMALE AWG22-28
CN540F(to MB-286 BOARD)			
	1-563-118-11	o	CONNECTOR, PS 8P
	1-563-115-11	o	CONTACT, FEMALE AWG24-28
CN714F(to MB-285 BOARD)			
	1-563-129-11	o	HOUSING, PS 30P
	1-563-115-11	o	CONTACT, FEMALE AWG24-28
CN715F(to MB-285 BOARD)			
	1-563-127-11	o	HOUSING, PS 26P
	1-563-115-11	o	CONTACT, FEMALE AWG24-28
CN716F(to MB-285 BOARD)			
	1-563-120-11	o	HOUGING, PS 12P
	1-563-115-11	o	CONTACT, FEMALE AWG24-28
CN720F(to MB-285 BOARD)			
	1-563-119-11	o	HOUSING, PS 10P
	1-563-115-11	o	CONTACT, FEMALE AWG24-28
CN721F(to MB-286 BOARD)			
	1-563-116-11	o	HOUSING, PS 4P
	1-563-115-11	o	CONTACT, FEMALE AWG24-28
CN721F(to PS-256 BOARD)			
	1-561-073-00	o	HOUSING, MATE-N 15P
	1-535-206-11	o	CONTACT, MATE-N, FEMALE AWG18-24
CN722F(to MB-285 BOARD)			
	1-569-201-11	o	HOUSING, 8P
	1-569-194-11	o	CONTACT, FEMALE AWG24-30
CN723F(to MB-285 BOARD)			
	1-563-122-11	o	HOUSING, PS 16P
	1-563-115-11	o	CONTACT, FEMALE AWG24-28
	(This is used only for DVR-2100.)		
CN724F(to MB-285 BOARD)			
	1-563-116-11	o	HOUSING, PS 4P

NOTE : For the parts marked # in the parts list, refer to "Section 23 Changed Parts".

(FRAME(DVR-2000/2100))

Ref. No.
or Q'ty Part No. SP Description

1-563-115-11 o CONTACT, FEMALE AWG24-28

CN725F(to MB-285 BOARD)
1-563-125-11 o HOUSING, PS 22P
1-563-115-11 o CONTACT, FEMALE AWG24-28

CN726F(to MB-285 BOARD)
1-563-128-11 o HOUSING, PS 28P
1-563-115-11 o CONTACT, FEMALE AWG24-28

CN728F(to RF-23 BOARD)
1-563-126-11 o HOUSING, PS 24P
1-563-115-11 o CONTACT, FEMALE AWG24-28

CN729F(to RF-23 BOARD)
1-563-126-11 o HOUSING, PS 24P
1-563-115-11 o CONTACT, FEMALE AWG24-28

CN730F(to RF-23 BOARD)
1-563-122-11 o HOUSING, PS 16P
1-563-115-11 o CONTACT, FEMALE AWG24-28

CN731F(to RF-23 BOARD)
1-569-205-11 o HOUSING, 12P
1-569-194-11 o CONTACT, FEMALE AWG24-30

CN732F(to RF-23 BOARD)
1-569-205-11 o HOUSING, 12P
1-569-194-11 o CONTACT, FEMALE AWG24-30

CN734F(to CN-508 BOARD)
1-563-119-11 o HOUSING, PS 10P
1-563-115-11 o CONTACT, FEMALE AWG24-28

CN735F(to CN-508 BOARD)
1-563-120-11 o HOUGING, PS 12P
1-563-115-11 o CONTACT, FEMALE AWG24-28

CN736F(to CN-508 BOARD)
1-563-125-11 o HOUSING, PS 22P
1-563-115-11 o CONTACT, FEMALE AWG24-28

CN737F(to CN-508 BOARD)
1-563-129-11 o HOUSING, PS 30P
1-563-115-11 o CONTACT, FEMALE AWG24-28

CN738F(to SE-144 BOARD)
1-562-147-11 s HOUSING, 2P
1-564-026-11 s CONTACT, FEMALE AWG24-30

CN739F(to SE-144 BOARD)
1-563-117-11 o HOUGING, PS 6P
1-563-115-11 o CONTACT, FEMALE AWG24-28

CN740F(to RF-23 BOARD)
1-569-196-11 o HOUSING, 3P
1-569-194-11 o CONTACT, FEMALE AWG24-30

CN741F(to RF-23 BOARD)
1-569-205-41 o HOUSING, 12P
1-569-194-11 o CONTACT, FEMALE AWG24-30

CN743F(to CN-501 BOARD)
1-563-116-11 o HOUSING, PS 4P
1-563-115-11 o CONTACT, FEMALE AWG24-28

CN744F(to CN-501 BOARD)
1-563-116-11 o HOUSING, PS 4P
1-563-115-11 o CONTACT, FEMALE AWG24-28

NOTE : Please see page 22-42 for the parts that are not listed in the parts list.

(FRAME(DVR-2000/2100))

Ref. No.
or Q'ty Part No. SP Description

CN745F(to CN-501 BOARD)
1-569-196-11 o HOUSING, 3P
1-569-194-11 o CONTACT, FEMALE AWG24-30

CN746F(to CN-501 BOARD)
1-569-196-11 o HOUSING, 3P
1-569-194-11 o CONTACT, FEMALE AWG24-30

CN747F(to CN-501 BOARD)
1-569-201-11 o HOUSING, 8P
1-569-194-11 o CONTACT, FEMALE AWG24-30
(This is used only for DVR-2100.)

CN748F(to CN-501 BOARD)
1-569-201-11 o HOUSING, 8P
1-569-194-11 o CONTACT, FEMALE AWG24-30
(This is used only for DVR-2100.)

CN749F(to PA-142 BOARD)
1-563-127-11 o HOUSING, PS 26P
1-563-115-11 o CONTACT, FEMALE AWG24-28

CN750F(to PA-142 BOARD)
1-569-196-11 o HOUSING, 3P
1-569-194-11 o CONTACT, FEMALE AWG24-30

CN751F(to PA-142 BOARD)
1-569-196-11 o HOUSING, 3P
1-569-194-11 o CONTACT, FEMALE AWG24-30

CN752F(to PA-142 BOARD)
1-569-196-41 o HOUSING, 3P
1-569-194-11 o CONTACT, FEMALE AWG24-30

CN753F(to PA-142 BOARD)
1-569-196-41 o HOUSING, 3P
1-569-194-11 o CONTACT, FEMALE AWG24-30

CN901F(REMOTE-1)
1-563-890-21 s CONNECTOR, D-SUB 9P, FEMALE

CN902F(REMOTE-2)
1-563-890-21 s CONNECTOR, D-SUB 9P, FEMALE

CN903F(REMOTE-3)
1-563-890-21 s CONNECTOR, D-SUB 9P, FEMALE

CN904F(PARALLEL I/O)
1-563-893-11 s CONNECTOR, D-SUB 50P, FEMALE

CN905F(REMOTE-4)
1-563-891-21 s CONNECTOR, D-SUB 25P, FEMALE

CN906F(CONTROL PANEL)
1-563-769-11 s CONNECTOR, 8P, FEMALE

CN907M(TIME CODE INPUT; FOR J)
1-565-281-11 o CONNECTOR, XLR 3P, MALE

CN907F(TIME CODE INPUT; FOR UC, EK)
1-565-282-11 o CONNECTOR, XLR 3P, FEMALE

CN908F(TIME CODE OUTPUT; FOR J)
1-565-282-11 o CONNECTOR, XLR 3P, FEMALE

CN908M(TIME CODE OUTPUT; FOR UC, EK)
1-565-281-11 o CONNECTOR, XLR 3P, MALE

CN909F(MONITOR L; FOR J)
1-565-282-11 o CONNECTOR, XLR 3P, FEMALE

NOTE : For the parts marked # in the parts list, refer to "Section 23 Changed Parts".

(FRAME(DVR-2000/2100))

Ref. No. or Q'ty	Part No.	SP	Description
CN909M(MONITOR L; FOR UC, EK)			
	1-565-281-11	o	CONNECTOR, XLR 3P, MALE
CN910F(MONITOR R; FOR J)			
	1-565-282-11	o	CONNECTOR, XLR 3P, FEMALE
CN910M(MONITOR R; FOR UC, EK)			
	1-565-281-11	o	CONNECTOR, XLR 3P, MALE
CN911M(CUE INPUT; FOR J)			
	1-565-281-11	o	CONNECTOR, XLR 3P, MALE
CN911F(CUE INPUT; FOR UC, EK)			
	1-565-282-11	o	CONNECTOR, XLR 3P, FEMALE
CN912F(CUE OUTPUT; FOR J)			
	1-565-282-11	o	CONNECTOR, XLR 3P, FEMALE
CN912M(CUE OUTPUT; FOR UC, EK)			
	1-565-281-11	o	CONNECTOR, XLR 3P, MALE
CN915F(WFM OUT MONITOR)			
	1-580-356-12	s	CONNECTOR, BNC, FEMALE
CN916F(WFM OUT TRIGGER)			
	1-580-356-12	s	CONNECTOR, BNC, FEMALE
CN917F(REFERENCE DIGITAL VIDEO)			
	1-580-356-12	s	CONNECTOR, BNC, FEMALE
CN918F(REFERENCE ANALOG VIDEO)			
	1-580-357-12	s	CONNECTOR, BNC, FEMALE
CN919F(REFERENCE ANALOG VIDEO)			
	1-580-357-12	s	CONNECTOR, BNC, FEMALE
CN920F(REFERENCE CP PULSE INPUT)			
	1-580-356-12	s	CONNECTOR, BNC, FEMALE
CN921F(REFERENCE CP PULSE)			
	1-580-356-12	s	CONNECTOR, BNC, FEMALE
CN922F(REFERENCE CP PULSE OUTPUT)			
	1-580-356-12	s	CONNECTOR, BNC, FEMALE
CN925F(DIGITAL VIDEO/AUDIO SERIAL IN)			
	1-580-356-12	s	CONNECTOR, BNC, FEMALE
CN926F(DIGITAL VIDEO/AUDIO SERIAL IN ACTIVE THROUGH)			
	1-580-356-12	s	CONNECTOR, BNC, FEMALE
CN927F(DIGITAL VIDEO/AUDIO MONITOR OUT)			
	1-580-356-12	s	CONNECTOR, BNC, FEMALE
CN928F(DIGITAL VIDEO/AUDIO SERIAL OUT)			
	1-580-356-12	s	CONNECTOR, BNC, FEMALE
CN929F(DIGITAL VIDEO/AUDIO SERIAL OUT)			
	1-580-356-12	s	CONNECTOR, BNC, FEMALE
CN930F(DIGITAL VIDEO/AUDIO SERIAL OUT)			
	1-580-356-12	s	CONNECTOR, BNC, FEMALE
CN931F(DIGITAL VIDEO/AUDIO MONITOR OUT)			
	1-580-356-12	s	CONNECTOR, BNC, FEMALE
CN932F(PARALLEL IN)			
	1-563-891-21	s	CONNECTOR, D-SUB 25P, FEMALE

NOTE : Please see page 22-42 for the parts that are not listed in the parts list.

(FRAME(DVR-2000/2100))

Ref. No. or Q'ty	Part No.	SP	Description
CN933F(PARALLEL OUT)			
	1-563-891-21	s	CONNECTOR, D-SUB 25P, FEMALE
CN934F(MONITOR OUT)			
	1-563-891-21	s	CONNECTOR, D-SUB 25P, FEMALE
CN935F(DIGITAL AUDIO I/O INPUT CH1)			
	1-565-282-11	o	CONNECTOR, XLR 3P, FEMALE
CN936F(DIGITAL AUDIO I/O INPUT CH2)			
	1-565-282-11	o	CONNECTOR, XLR 3P, FEMALE
CN937F(DIGITAL AUDIO I/O INPUT CH3)			
	1-565-282-11	o	CONNECTOR, XLR 3P, FEMALE
CN938F(DIGITAL AUDIO I/O INPUT CH4)			
	1-565-282-11	o	CONNECTOR, XLR 3P, FEMALE
CN939M(DIGITAL AUDIO I/O OUTPUT CH1)			
	1-565-281-11	o	CONNECTOR, XLR 3P, MALE
CN940M(DIGITAL AUDIO I/O OUTPUT CH2)			
	1-565-281-11	o	CONNECTOR, XLR 3P, MALE
CN941M(DIGITAL AUDIO I/O OUTPUT CH3)			
	1-565-281-11	o	CONNECTOR, XLR 3P, MALE
CN942M(DIGITAL AUDIO I/O OUTPUT CH4)			
	1-565-281-11	o	CONNECTOR, XLR 3P, MALE
CN943M(DIGITAL AUDIO I/O ADVANCE AUDIO OUT CH1)			
	1-565-281-11	o	CONNECTOR, XLR 3P, MALE
CN944M(DIGITAL AUDIO I/O ADVANCE AUDIO OUT CH2)			
	1-565-281-11	o	CONNECTOR, XLR 3P, MALE
CN945M(DIGITAL AUDIO I/O ADVANCE AUDIO OUT CH3)			
	1-565-281-11	o	CONNECTOR, XLR 3P, MALE
CN946M(DIGITAL AUDIO I/O ADVANCE AUDIO OUT CH4)			
	1-565-281-11	o	CONNECTOR, XLR 3P, MALE
CN954F(to MA-39/50 BOARD)			
	1-563-124-11	o	HOUSING, PS 20P
	1-563-115-11	o	CONTACT, FEMALE AWG24-28
CN960F(to IF-276 BOARD)			
	1-563-117-11	o	HOUGING, PS 6P
	1-563-115-11	o	CONTACT, FEMALE AWG24-28
CN961F(DIGITAL VIDEO/AUDIO MONITOR OUT)			
	1-580-356-12	s	CONNECTOR, BNC, FEMALE
CN962F(to VIO-15 BOARD)			
	1-563-118-11	o	CONNECTOR, PS 8P
	1-563-115-11	o	CONTACT, FEMALE AWG24-28
CN964F(REFERENCE DIGITAL VIDEO)			
	1-580-356-12	s	CONNECTOR, BNC, FEMALE
CN970F(to VIO-16 BOARD)			
	1-563-129-11	o	HOUSING, PS 30P
	1-563-115-11	o	CONTACT, FEMALE AWG24-28
H1	8-825-770-01	s	HEAD FE "FULL ERASE HEAD"
H2	8-825-770-12	s	HEAD, AUDIO EPS288-5803 "CUE/CTL/TC ERASE HEAD AND CUE/CTL/TC R/P HEAD"

NOTE : For the parts marked # in the parts list, refer to "Section 23 Changed Parts".

(FRAME(DVR-2000/2100))

Ref. No. or Q'ty	Part No.	SP	Description
J1	1-507-854-00	s	JACK, PHONE, STEREO
M901	1-541-891-11	s	MOTOR, FAN "FRONT"
M902	1-541-890-11	s	MOTOR, FAN "REAR"
M903	1-541-890-11	s	MOTOR, FAN "REAR"
M904	1-541-890-11	s	MOTOR, FAN "REAR"
M905	8-835-047-01	s	MOTOR, DC MNR-4000A "OUTER"
M906	8-835-123-01	s	MOTOR, DC MNR-7400A "INNER"
M907	8-835-446-01	s	MOTOR, DC U-6C "T-REEL"
M908	8-835-446-01	s	MOTOR, DC U-6C "S-REEL"
M909	8-835-047-01	s	MOTOR, DC MNR-4000A "REEL SHIFT MOTOR"
M910	8-835-123-01	s	MOTOR, DC MNR-7400A "THREADING MOTOR"
M911	8-835-443-01	s	MOTOR, DC SCU-0101A "CAPSTAN MOTOR"
PM901	1-454-489-12	s	SOLENOID "T-REEL STOPPER"
PM902	1-454-487-12	s	SOLENOID "T-BRAKE"
PM903	1-454-487-12	s	SOLENOID "S-BRAKE"
PM904	1-454-489-12	s	SOLENOID "S-REEL STOPPER"
PM905	1-454-434-11	s	SOLENOID "CAPSTAN PINCH"
RV901	1-237-578-11	s	SENSOR, POSITION ROTARY
RV902	1-237-578-11	s	SENSOR, POSITION ROTARY
S1	⚠ 1-571-877-12	s	SWITCH, PUSH "POWER"
S2	1-514-524-00	s	SWITCH, SLIDE "CUE"
S3	1-514-524-00	s	SWITCH, SLIDE "75 OHM TERMINATE"
S4	⚠ 1-553-575-21	s	SWITCH, ROCKER "VOLTAGE SELECTOR"

NOTE : Please see page 22-42 for the parts that are not listed in the parts list.

FRAME(BKDV-2010)

Ref. No. or Q'ty	Part No.	SP	Description
1pc	1-454-569-13	s	CLATCH, ELECTROMAGNETIC
1pc	1-466-580-11	s	ENCODER, ROTARY
1pc	1-550-685-11	s	DISPLAY UNIT, EL
CN1F(to DET-11 BOARD)			
	1-569-194-11	o	CONTACT, FEMALE AWG24-30
	1-569-201-11	o	HOUSING, 8P
CN11F(to DISPLAY UNIT)			
	1-569-194-11	o	CONTACT, FEMALE AWG24-30
	1-561-889-00	o	HOUSING, PS 16P
CN501F(to CP-156 BOARD)			
	1-580-591-11	o	HOUSING, 30P
	1-580-599-11	o	CONTACT, LY, FEMALE AWG26-30
CN502F(to CP-156 BOARD)			
	1-580-591-11	o	HOUSING, 30P
	1-580-599-11	o	CONTACT, LY, FEMALE AWG26-30
CN504F(to SW-448 BOARD)			
	1-580-591-11	o	HOUSING, 30P
	1-580-599-11	o	CONTACT, LY, FEMALE AWG26-30
CN505F(to SW-448 BOARD)			
	1-580-591-11	o	HOUSING, 30P
	1-580-599-11	o	CONTACT, LY, FEMALE AWG26-30
CN506F(to SW-448 BOARD)			
	1-569-206-21	o	HOUSING, 13P
	1-569-194-11	o	CONTACT, FEMALE AWG24-30
CN507F(to SW-448 BOARD)			
	1-580-583-11	o	HOUSING, 14P
	1-580-599-11	o	CONTACT, LY, FEMALE AWG26-30
CN508F(to SW-423 BOARD)			
	1-569-206-21	o	HOUSING, 13P
	1-569-194-11	o	CONTACT, FEMALE AWG24-30
CN509F(to PS-219 BOARD)			
	1-580-583-11	o	HOUSING, 14P
	1-580-599-11	o	CONTACT, LY, FEMALE AWG26-30
CN510F(to PS-219 BOARD)			
	1-563-769-11	s	CONNECTOR, 8P, FEMALE
CN511F(to SW-448 BOARD)			
	1-580-584-11	o	HOUSING, 16P
	1-580-599-11	o	CONTACT, LY, FEMALE AWG26-30
CN512F(to SW-448 BOARD)			
	1-569-201-11	o	HOUSING, 8P
	1-569-194-11	o	CONTACT, FEMALE AWG24-30
CN514F(to SW-448 BOARD)			
	1-580-589-11	o	HOUSING, 26P
	1-580-599-11	o	CONTACT, LY, FEMALE AWG26-30
CN516F(to LE-78 BOARD)			
	1-580-589-11	o	HOUSING, 26P
	1-580-599-11	o	CONTACT, LY, FEMALE AWG26-30
CN517F(to LE-78 BOARD)			
	1-569-197-21	o	HOUSING, 4P
	1-569-194-11	o	CONTACT, FEMALE AWG24-30
CN518F(to PS-219 BOARD)			
	1-569-197-21	o	HOUSING, 4P
	1-569-194-11	o	CONTACT, FEMALE AWG24-30

NOTE : For the parts marked # in the parts list, refer to "Section 23 Changed Parts".

PACKING MATERIALS & SUPPLIED ACCESSORIES

Ref. No. or Q'ty	Part No.	SP	Description
1pc	A-6026-173-A	o	MOUNTED CIRCUIT BOARD, EX-244
(See "EX-244 BOARD" for the components.)			
1pc	A-6026-174-A	o	MOUNTED CIRCUIT BOARD, EX-245
(See "EX-245 BOARD" for the components.)			
1pc	A-6026-175-A	o	MOUNTED CIRCUIT BOARD, EX-288
(See "EX-288 BOARD" for the components.)			
2pcs	A-6001-021-B	o	ANGLE (8U) ASSY, RACK
(One assembly is composed by the following parts.)			
1pc	2-378-801-01	o	HANDLE
2pcs	7-682-376-04	s	SCREW, +RK 5x12
1pc	⚠ 1-506-411-21	s	ADAPTOR, AC PLUG 3P-2P (FOR J)
1pc	⚠ 1-551-812-11	s	CORD, POWER (FOR J AND UC)
1pc	1-559-692-11	s	CABLE 8P 0.8 m
1pc	⚠ 1-590-910-11	s	CORD, POWER (FOR EK)
1pc	1-949-442-11	s	SE-EX HARNESS
1pc	1-948-586-11	s	HARNESS (SEN-11)
1pc	2-990-242-01	s	HOLDER (B), PLUG
4pcs	7-682-575-09	s	SCREW +B 5X10
4pcs	7-688-005-02	s	WASHER 5, SMALL

NOTE : Please see page 22-42 for the parts that are not listed in the parts list.

OPTIONAL FIXTURES

Part No.	SP	Description
A-6026-173-A		EXTENSION BOARD, EX-244
A-6026-174-A		EXTENSION BOARD, EX-245
A-6026-175-A		EXTENSION BOARD, EX-288
J-6250-750-A		SLANT BLOCK S2
J-6250-760-A		SLANT BLOCK T2
J-6252-210-A		HEAD CHIP MICROSCOPE
J-6252-360-A		GUIDE S5 ZENITH CHECK TOOL
J-6252-370-A		GUIDE T6 ZENITH CHECK TOOL
J-6252-730-A		SLANT CHECK MASTER
J-6253-420-A		MICROSCOPE ATTACHMENT
J-6256-780-A		SLANT BLOCK POSITIONING PIN
J-6258-010-A		CALIBRATION MASTER
J-6258-020-A		SHAFT (2)
J-6266-460-A		SW-REG ADJUSTMENT EXTENSION CABLE
1-948-586-11		SEN FLAT CABLE
1-949-442-11		SE-EX HARNESS
2-034-697-00		CLEANING PIECE
3-601-330-99		HEAD CLEANER STICK
7-661-018-18		OIL
7-662-001-41		MOLYTON GREASE NO.320 (30g BOTTLE)
8-960-070-02		ALIGNMENT TAPE (525/60 SYSTEM), DR5-2A
8-960-070-52		ALIGNMENT TAPE (625/50 SYSTEM), DR5-2B
9-919-573-00		CLEANING FLUID
----------		CLEANING CASSETTE, DCM-75CL (STANDARD PRODUCTS)
J-6257-770-A		DVR-2000/2100 TOOL KIT(A)
J-6257-780-A		DVR-2000/2100 TOOL KIT(B)
(Tool kit(A) has all the following parts. Tool kit(B) has the following parts with marked *.)		
*J-6041-670-A		THICKNESS GAUGE
*J-6041-640-A		TENSION SCALE 5kg
J-6152-450-A		WIRE CLEARANCE GAUGE SET
J-6251-090-A		TORQUE DRIVER BIT
J-6251-110-A		SCANNER ECCENTRICITY ADJ. TOOL
J-6251-210-A		PINCH ROLLER(PRESSURE) ADJ. TOOL
J-6252-190-B		REEL TABLE HEIGHT ADJ. TOOL
J-6252-300-A		FLAT PLATE
J-6252-510-A		TORQUE DRIVER(6kg-cm)
J-6252-520-A		TORQUE DRIVER(12kg-cm)
J-6252-530-A		TORQUE DRIVER(26kg-cm)
J-6252-540-B		BIT SET FOR TORQUE DRIVER
J-6253-030-A		GUIDE T6 GAUGE
J-6253-300-A		TENSION ARM BENDING TOOL
J-6254-010-A		DRUM ECCENTRICITY ADJ. TOOL
*J-6254-030-A		REFERENCE PLATE
*J-6254-650-A		RG SET PIN
*J-6257-000-A		GUIDE ROLLER HEIGHT ADJ. TOOL
J-6257-010-A		HEAD PROCEJTION TOOL ATTACHMENT
*J-6257-040-A		TENSION REGULATOR ADJ. TOOL

NOTE : For the parts marked # in the parts list, refer to "Section 23 Changed Parts".

(OPTIONAL FIXTURES)

Part No.	SP Description
*J-6257-050-A	BLOCK GAUGE(PINCH SHAFT)
*J-6257-060-A	BLOCK GAUGE(TEN.REG/T4)
*J-6257-070-A	OVER WRAP ADJ. TAPER PIN
J-6257-080-A	SLIP RING SPANNER
J-6257-120-A	HEXAGON SPANNER
*J-6257-760-A	CARRYING CASE
J-6264-360-A	BNC-UM CABLE
*7-723-902-00	DENTAL MIRROR

NOTE : Please see page 22-42 for the parts that are not listed in the parts list.

NOTE : For the parts marked # in the parts list, refer to "Section 23 Changed Parts".

Section 23
Changed Part

NOTE: The numbers identified by making with) are
matching with each serial numbers.
See the following table matched with each serial
numbers.

DVR-2000
---

103), 104) and 105)
Serial No. 10001 and higher (J)
Serial No. 10001 and higher (UC)
Sreial No. 10001 and higher (EK)

106) Serial No. 10101 and higher (J)
Serial No. 10101 and higher (UC)
Serial No. 10101 and higher (EK)

107) Serial No. 10201 and higher (J)
Serial No. 10201 and higher (UC)
Serial No. 10201 and higher (EK)

110) Serial No. 10201 and higher (J)
Serial No. 10201 and higher (UC)
Serial No. 10301 and higher (EK)

111) Serial No. 10201 and higher (J)
Serial No. 10201 and higher (UC)
Serial No. 10401 and higher (EK)

201) Serial No. 10201 and higher (J)
Serial No. 10301 and higher (UC)
Serial No. 10401 and higher (EK)

202) Serial No. 10201 and higher (J)
Serial No. 10301 and higher (UC)
Serial No. 10501 and higher (EK)

203) Serial No. 10201 and higher (J)
Serial No. 10301 and higher (UC)
Serial No. 10601 and higher (EK)

204) Serial No. 10201 and higher (J)
Serial No. 10401 and higher (UC)
Serial No. 10701 and higher (EK)

210) Serial No. 10201 and higher (J)
Serial No. 10401 and higher (UC)
Serial No. 10801 and higher (EK)

211) Serial No. 10201 and higher (J)
Serial No. 10501 and higher (UC)
Serial No. 10901 and higher (EK)

212) Serial No. 10201 and higher (J)
Serial No. 10501 and higher (UC)
Serial No. 11001 and higher (EK)

301) Serial No. 10201 and higher (J)
Serial No. 10601 and higher (UC)
Serial No. 11001 and higher (EK)

302) Serial No. 10201 and higher (J)
Serial No. 10701 and higher (UC)
Serial No. 11101 and higher (EK)

303) and 304)
Serial No. 10301 and higher (J)
Serial No. 10801 and higher (UC)
Serial No. 11101 and higher (EK)

306) Serial No. 10401 and higher (J)
Serial No. 10901 and higher (UC)
Serial No. 11201 and higher (EK)

(DVR-2000)

308) Serial No. 10401 and higher (J)
Serial No. 11001 and higher (UC)
Serial No. 11301 and higher (EK)

309) and 310)
Serial No. 10501 and higher (J)
Serial No. 11101 and higher (UC)
Serial No. 11301 and higher (EK)

401) Serial No. 10701 and higher (J)
Serial No. 11401 and higher (UC)
Serial No. 11301 and higher (EK)

408) Serial No. 10901 and higher (J)
Serial No. 11701 and higher (UC)
Serial No. 11401 and higher (EK)

501) Serial No. 11001 and higher (J)
Serial No. 11801 and higher (UC)
Serial No. 11501 and higher (EK)

503) Serial No. 11101 and higher (J)
Serial No. 11801 and higher (UC)
Serial No. 11501 and higher (EK)

504) Serial No. 11201 and higher (J)
Serial No. 11901 and higher (UC)
Serial No. 11501 and higher (EK)

505) Serial No. 11201 and higher (J)
Serial No. 12001 and higher (UC)
Serial No. 11501 and higher (EK)

509) Serial No. 11401 and higher (J)
Serial No. 12201 and higher (UC)
Serial No. 11601 and higher (EK)

511) Serial No. 11501 and higher (J)
Serial No. 12301 and higher (UC)
Serial No. 11701 and higher (EK)

601) Serial No. 11601 and higher (J)
Serial No. 12301 and higher (UC)
Serial No. 11701 and higher (EK)

606) Serial No. 11801 and higher (J)
Serial No. 12501 and higher (UC)
Serial No. 11801 and higher (EK)

607) Serial No. 11901 and higher (J)
Serial No. 12601 and higher (UC)
Serial No. 11801 and higher (EK)

609) Serial No. 12001 and higher (J)
Serial No. 12701 and higher (UC)
Serial No. 11901 and higher (EK)

DVR-2100
---

103) Serial No. 10101 and higher (J)
Serial No. 10101 and higher (UC)
Serial No. 10101 and higher (EK)

104) Serial No. 10201 and higher (J)
Serial No. 10201 and higher (UC)
Serial No. 10201 and higher (EK)

105) Serial No. 10301 and higher (J)
Serial No. 10301 and higher (UC)
Serial No. 10301 and higher (EK)

106) Serial No. 10401 and higher (J)
Serial No. 10401 and higher (UC)
Serial No. 10401 and higher (EK)

107) Serial No. 10501 and higher (J)
Serial No. 10501 and higher (UC)
Serial No. 10501 and higher (EK)

110) Serial No. 10601 and higher (J)
Serial No. 10601 and higher (UC)
Serial No. 10601 and higher (EK)

111) Serial No. 10701 and higher (J)
Serial No. 10701 and higher (UC)
Serial No. 10701 and higher (EK)

201) Serial No. 10701 and higher (J)
Serial No. 10901 and higher (UC)
Serial No. 10901 and higher (EK)

203) Serial No. 10801 and higher (J)
Serial No. 11101 and higher (UC)
Serial No. 11101 and higher (EK)

204) and 210)
Serial No. 10801 and higher (J)
Serial No. 11101 and higher (UC)
Serial No. 11101 and higher (EK)

211), 212), 301) and 302)
Serial No. 10901 and higher (J)
Serial No. 11101 and higher (UC)
Serial No. 11101 and higher (EK)

303) Serial No. 11001 and higher (J)
Serial No. 11101 and higher (UC)
Serial No. 11101 and higher (EK)

304) Serial No. 11001 and higher (J)
Serial No. 11101 and higher (UC)
Serial No. 11201 and higher (EK)

306) Serial No. 11101 and higher (J)
Serial No. 11201 and higher (UC)
Serial No. 11201 and higher (EK)

308) and 309)
Serial No. 11101 and higher (J)
Serial No. 11301 and higher (UC)
Serial No. 11201 and higher (EK)

310) Serial No. 11101 and higher (J)
Serial No. 11401 and higher (UC)
Serial No. 11201 and higher (EK)

(DVR-2100)

401) Serial No. 10701 and higher (J)
Serial No. 11401 and higher (UC)
Serial No. 11301 and higher (EK)

408) Serial No. 11501 and higher (J)
Serial No. 11801 and higher (UC)
Serial No. 11401 and higher (EK)

501) Serial No. 11601 and higher (J)
Serial No. 11901 and higher (UC)
Serial No. 11401 and higher (EK)

503) Serial No. 11601 and higher (J)
Serial No. 12001 and higher (UC)
Serial No. 11401 and higher (EK)

504) Serial No. 11601 and higher (J)
Serial No. 12101 and higher (UC)
Serial No. 11401 and higher (EK)

505) Serial No. 11601 and higher (J)
Serial No. 12201 and higher (UC)
Serial No. 11401 and higher (EK)

509) Serial No. 11801 and higher (J)
Serial No. 12401 and higher (UC)
Serial No. 11601 and higher (EK)

511) Serial No. 11901 and higher (J)
Serial No. 12501 and higher (UC)
Serial No. 11601 and higher (EK)

512) Serial No. 11901 and higher (J)
Serial No. 12601 and higher (UC)
Serial No. 11601 and higher (EK)

601) Serial No. 12001 and higher (J)
Serial No. 12601 and higher (UC)
Serial No. 11601 and higher (EK)

606) Serial No. 12101 and higher (J)
Serial No. 12801 and higher (UC)
Serial No. 11801 and higher (EK)

607) Serial No. 12101 and higher (J)
Serial No. 12801 and higher (UC)
Serial No. 11901 and higher (EK)

608) Serial No. 12101 and higher (J)
Serial No. 12901 and higher (UC)
Serial No. 11901 and higher (EK)

609) Serial No. 12201 and higher (J)
Serial No. 12901 and higher (UC)
Serial No. 11901 and higher (EK)

AE-12 BOARD

OLD)	1pc	A-6013-126-A o MOUNTED CIRCUIT BOARD, AE-12
106)	1pc	A-6013-126-B o MOUNTED CIRCUIT BOARD, AE-12

*The new board is upward compatible with the former one.
See section 22 for details.

OLD)	C103	1-124-234-00 s ELECT 22uF 20% 16V
210)	C103	DELETED.
OLD)	C104	1-124-234-00 s ELECT 22uF 20% 16V
210)	C104	DELETED.
OLD)	C108	1-124-234-00 s ELECT 22uF 20% 16V
605)	C108	1-126-514-11 s ELECT 22uF 20% 16V
OLD)	C109	1-124-234-00 s ELECT 22uF 20% 16V
605)	C109	1-126-514-11 s ELECT 22uF 20% 16V
OLD)	C115	1-124-234-00 s ELECT 22uF 20% 16V
203)	C115	DELETED.
OLD)	C116	1-124-234-00 s ELECT 22uF 20% 16V
203)	C116	DELETED.
OLD)	C122	1-124-234-00 s ELECT 22uF 20% 16V
605)	C122	1-126-514-11 s ELECT 22uF 20% 16V
OLD)	C123	1-124-234-00 s ELECT 22uF 20% 16V
605)	C123	1-126-514-11 s ELECT 22uF 20% 16V
OLD)	C134	1-124-234-00 s ELECT 22uF 20% 16V
203)	C134	DELETED.
OLD)	C135	1-124-234-00 s ELECT 22uF 20% 16V
203)	C135	DELETED.
OLD)	C136	1-163-038-00 s CERAMIC, CHIP 0.1uF 25V
210)	C136	1-163-033-00 s CERAMIC, CHIP 0.022uF 50V
OLD)	C137	1-163-038-00 s CERAMIC, CHIP 0.1uF 25V
210)	C137	1-163-033-00 s CERAMIC, CHIP 0.022uF 50V
OLD)	C145	1-124-234-00 s ELECT 22uF 20% 16V
605)	C145	1-126-514-11 s ELECT 22uF 20% 16V
OLD)	C146	1-124-234-00 s ELECT 22uF 20% 16V
605)	C146	1-126-514-11 s ELECT 22uF 20% 16V
OLD)	C150	NOT IN USE.
203)	C150	1-109-542-00 s MICA 220pF 5% 100V
OLD)	C151	NOT IN USE.
203)	C151	1-109-621-00 s MICA 220pF 1% 500V
OLD)	C200	1-126-103-11 s ELECT 220pF 1% 500V
605)	C200	1-126-935-11 s ELECT 220pF 1% 500V
OLD)	C201	1-126-103-11 s ELECT 220pF 1% 500V
605)	C201	1-126-935-11 s ELECT 220pF 1% 500V
OLD)	C202	1-163-038-00 s CERAMIC, CHIP 0.1uF 25V
210)	C202	1-163-033-00 s CERAMIC, CHIP 0.022uF 50V
OLD)	C203	1-126-103-11 s ELECT 220pF 1% 500V
605)	C203	1-126-935-11 s ELECT 220pF 1% 500V
OLD)	C204	1-126-103-11 s ELECT 220pF 1% 500V
605)	C204	1-126-935-11 s ELECT 220pF 1% 500V
OLD)	C205	1-163-038-00 s CERAMIC, CHIP 0.1uF 25V
210)	C205	1-163-033-00 s CERAMIC, CHIP 0.022uF 50V
OLD)	C206	1-126-103-11 s ELECT 220pF 1% 500V
605)	C206	1-126-935-11 s ELECT 220pF 1% 500V
OLD)	C207	1-126-103-11 s ELECT 220pF 1% 500V
605)	C207	1-126-935-11 s ELECT 220pF 1% 500V

(AE-12 BOARD)

OLD)	C208	1-163-038-00 s CERAMIC, CHIP 0.1uF 25V
210)	C208	1-163-033-00 s CERAMIC, CHIP 0.022uF 50V
OLD)	C209	1-124-234-00 s ELECT 22uF 20% 16V
203)	C209	DELETED.
OLD)	C210	1-124-234-00 s ELECT 22uF 20% 16V
605)	C210	1-126-514-11 s ELECT 22uF 20% 16V
OLD)	C211	1-126-103-11 s ELECT 220pF 1% 500V
605)	C211	1-126-935-11 s ELECT 220pF 1% 500V
OLD)	C212	1-126-103-11 s ELECT 220pF 1% 500V
605)	C212	1-126-935-11 s ELECT 220pF 1% 500V
OLD)	C213	1-163-038-00 s CERAMIC, CHIP 0.1uF 25V
210)	C213	1-163-033-00 s CERAMIC, CHIP 0.022uF 50V
OLD)	C214	1-124-234-00 s ELECT 22uF 20% 16V
203)	C214	DELETED.
OLD)	C215	1-124-234-00 s ELECT 22uF 20% 16V
605)	C215	1-126-514-11 s ELECT 22uF 20% 16V
OLD)	C252	1-124-234-00 s ELECT 22uF 20% 16V
605)	C252	1-126-514-11 s ELECT 22uF 20% 16V
OLD)	C253	1-124-234-00 s ELECT 22uF 20% 16V
650)	C253	1-126-514-11 s ELECT 22uF 20% 16V
OLD)	C258	1-124-234-00 s ELECT 22uF 20% 16V
210)	C258	DELETED.
OLD)	C259	1-124-234-00 s ELECT 22uF 20% 16V
210)	C259	DELETED.
OLD)	C300	1-124-234-00 s ELECT 22uF 20% 16V
605)	C300	1-126-514-11 s ELECT 22uF 20% 16V
OLD)	C301	1-124-234-00 s ELECT 22uF 20% 16V
605)	C301	1-126-514-11 s ELECT 22uF 20% 16V
OLD)	C308	1-124-234-00 s ELECT 22uF 20% 16V
605)	C308	1-126-514-11 s ELECT 22uF 20% 16V
OLD)	C309	1-124-234-00 s ELECT 22uF 20% 16V
605)	C309	1-126-514-11 s ELECT 22uF 20% 16V
OLD)	C314	1-124-234-00 s ELECT 22uF 20% 16V
605)	C314	1-126-514-11 s ELECT 22uF 20% 16V
OLD)	C323	1-124-234-00 s ELECT 22uF 20% 16V
605)	C323	1-126-514-11 s ELECT 22uF 20% 16V
OLD)	C329	1-131-360-00 s TANTALUM 15uF 20% 25V
210)	C329	1-124-234-00 s ELECT 22uF 20% 16V
605)	C329	1-126-514-11 s ELECT 22uF 20% 16V
OLD)	C331	1-124-234-00 s ELECT 22uF 20% 16V
605)	C331	1-126-514-11 s ELECT 22uF 20% 16V
OLD)	C332	1-124-234-00 s ELECT 22uF 20% 16V
605)	C332	1-126-514-11 s ELECT 22uF 20% 16V
OLD)	C333	1-163-038-00 s CERAMIC, CHIP 0.1uF 25V
210)	C333	1-163-033-00 s CERAMIC, CHIP 0.022uF 50V
OLD)	C334	1-163-038-00 s CERAMIC, CHIP 0.1uF 25V
210)	C334	1-163-033-00 s CERAMIC, CHIP 0.022uF 50V
OLD)	C335	1-124-234-00 s ELECT 22uF 20% 16V
605)	C335	1-126-514-11 s ELECT 22uF 20% 16V
OLD)	C336	1-124-234-00 s ELECT 22uF 20% 16V
650)	C336	1-126-514-11 s ELECT 22uF 20% 16V
OLD)	C338	1-131-360-00 s TANTALUM 15uF 20% 25V
210)	C338	1-124-234-00 s ELECT 22uF 20% 16V
605)	C338	1-126-514-11 s ELECT 22uF 20% 16V
OLD)	C339	1-124-234-00 s ELECT 22uF 20% 16V
210)	C339	DELETED.

OLD)	C340	1-124-234-00 s ELECT 22uF 20% 16V
210)	C340	DELETED.
OLD)	C416	1-124-234-00 s ELECT 22uF 20% 16V
605)	C416	1-126-514-11 s ELECT 22uF 20% 16V
OLD)	C417	1-124-234-00 s ELECT 22uF 20% 16V
605)	C417	1-126-514-11 s ELECT 22uF 20% 16V
OLD)	C422	1-124-234-00 s ELECT 22uF 20% 16V
210)	C422	DELETED.
OLD)	C423	1-124-234-00 s ELECT 22uF 20% 16V
210)	C423	DELETED.
OLD)	C428	1-124-234-00 s ELECT 22uF 20% 16V
605)	C428	1-126-514-11 s ELECT 22uF 20% 16V
OLD)	C429	1-124-234-00 s ELECT 22uF 20% 16V
605)	C429	1-126-514-11 s ELECT 22uF 20% 16V
OLD)	C435	1-124-234-00 s ELECT 22uF 20% 16V
605)	C435	1-126-514-11 s ELECT 22uF 20% 16V
OLD)	C436	1-124-234-00 s ELECT 22uF 20% 16V
605)	C436	1-126-514-11 s ELECT 22uF 20% 16V
OLD)	C441	1-124-234-00 s ELECT 22uF 20% 16V
605)	C441	1-126-514-11 s ELECT 22uF 20% 16V
OLD)	C443	1-124-234-00 s ELECT 22uF 20% 16V
605)	C443	1-126-514-11 s ELECT 22uF 20% 16V
OLD)	C452	1-124-234-00 s ELECT 22uF 20% 16V
605)	C452	1-126-514-11 s ELECT 22uF 20% 16V
OLD)	C453	1-124-234-00 s ELECT 22uF 20% 16V
605)	C453	1-126-514-11 s ELECT 22uF 20% 16V
OLD)	C456	1-124-234-00 s ELECT 22uF 20% 16V
605)	C456	1-126-514-11 s ELECT 22uF 20% 16V
OLD)	C457	1-124-234-00 s ELECT 22uF 20% 16V
605)	C457	1-126-514-11 s ELECT 22uF 20% 16V
OLD)	C458	1-124-234-00 s ELECT 22uF 20% 16V
605)	C458	1-126-514-11 s ELECT 22uF 20% 16V
OLD)	C459	1-124-234-00 s ELECT 22uF 20% 16V
605)	C459	1-126-514-11 s ELECT 22uF 20% 16V
OLD)	C500	1-124-234-00 s ELECT 22uF 20% 16V
605)	C500	1-126-514-11 s ELECT 22uF 20% 16V
OLD)	C501	1-124-234-00 s ELECT 22uF 20% 16V
605)	C501	1-126-514-11 s ELECT 22uF 20% 16V
OLD)	C511	1-124-234-00 s ELECT 22uF 20% 16V
605)	C511	1-126-514-11 s ELECT 22uF 20% 16V
OLD)	C512	1-124-234-00 s ELECT 22uF 20% 16V
605)	C512	1-126-514-11 s ELECT 22uF 20% 16V
OLD)	C526	1-124-234-00 s ELECT 22uF 20% 16V
210)	C526	DELETED.
OLD)	C527	1-124-234-00 s ELECT 22uF 20% 16V
210)	C527	DELETED.
OLD)	C529	1-131-360-00 s TANTALUM 15uF 20% 25V
210)	C529	1-124-234-00 s ELECT 22uF 20% 16V
605)	C529	1-126-514-11 s ELECT 22uF 20% 16V
OLD)	C530	1-124-234-00 s ELECT 22uF 20% 16V
605)	C530	1-126-514-11 s ELECT 22uF 20% 16V
OLD)	C531	1-124-234-00 s ELECT 22uF 20% 16V
210)	C531	DELETED.

(AE-12 BOARD)

OLD)	C532	1-124-234-00 s ELECT 22uF 20% 16V
210)	C532	DELETED.
OLD)	C533	1-124-234-00 s ELECT 22uF 20% 16V
605)	C533	1-126-514-11 s ELECT 22uF 20% 16V
OLD)	C535	1-131-360-00 s TANTALUM 15uF 20% 25V
210)	C535	1-124-234-00 s ELECT 22uF 20% 16V
605)	C535	1-126-514-11 s ELECT 22uF 20% 16V
OLD)	C536	1-124-234-00 s ELECT 22uF 20% 16V
605)	C536	1-126-514-11 s ELECT 22uF 20% 16V
OLD)	C537	1-124-234-00 s ELECT 22uF 20% 16V
605)	C537	1-126-514-11 s ELECT 22uF 20% 16V
OLD)	C542	1-131-360-00 s TANTALUM 15uF 20% 25V
210)	C542	1-124-234-00 s ELECT 22uF 20% 16V
605)	C542	1-126-514-11 s ELECT 22uF 20% 16V
OLD)	C543	1-124-234-00 s ELECT 22uF 20% 16V
210)	C543	DELETED.
OLD)	C544	1-124-234-00 s ELECT 22uF 20% 16V
210)	C544	DELETED.
OLD)	C548	1-131-360-00 s TANTALUM 15uF 20% 25V
210)	C548	1-124-234-00 s ELECT 22uF 20% 16V
605)	C548	1-126-514-11 s ELECT 22uF 20% 16V
OLD)	C551	1-124-234-00 s ELECT 22uF 20% 16V
605)	C551	1-126-514-11 s ELECT 22uF 20% 16V
OLD)	C552	1-163-038-00 s CERAMIC, CHIP 0.1uF 25V
210)	C552	1-163-033-00 s CERAMIC, CHIP 0.022uF 50V
OLD)	C553	1-124-234-00 s ELECT 22uF 20% 16V
605)	C553	1-126-514-11 s ELECT 22uF 20% 16V
OLD)	C554	1-124-234-00 s ELECT 22uF 20% 16V
605)	C554	1-126-514-11 s ELECT 22uF 20% 16V
OLD)	C556	1-163-038-00 s CERAMIC, CHIP 0.1uF 25V
210)	C556	1-163-033-00 s CERAMIC, CHIP 0.022uF 50V
OLD)	C557	1-163-038-00 s CERAMIC, CHIP 0.1uF 25V
210)	C557	1-163-033-00 s CERAMIC, CHIP 0.022uF 50V
OLD)	C561	1-131-360-00 s TANTALUM 15uF 20% 25V
210)	C561	1-124-234-00 s ELECT 22uF 20% 16V
605)	C561	1-126-514-11 s ELECT 22uF 20% 16V
OLD)	C562	1-124-234-00 s ELECT 22uF 20% 16V
605)	C562	1-126-514-11 s ELECT 22uF 20% 16V
OLD)	C563	1-124-234-00 s ELECT 22uF 20% 16V
605)	C563	1-126-514-11 s ELECT 22uF 20% 16V
OLD)	C567	1-131-360-00 s TANTALUM 15uF 20% 25V
210)	C567	1-124-234-00 s ELECT 22uF 20% 16V
605)	C567	1-126-514-11 s ELECT 22uF 20% 16V
OLD)	C568	1-124-234-00 s ELECT 22uF 20% 16V
605)	C568	1-126-514-11 s ELECT 22uF 20% 16V
OLD)	C569	1-124-234-00 s ELECT 22uF 20% 16V
605)	C569	1-126-514-11 s ELECT 22uF 20% 16V
OLD)	C573	1-163-038-00 s CERAMIC, CHIP 0.1uF 25V
210)	C573	1-163-033-00 s CERAMIC, CHIP 0.022uF 50V
OLD)	C574	1-163-038-00 s CERAMIC, CHIP 0.1uF 25V
210)	C574	1-163-033-00 s CERAMIC, CHIP 0.022uF 50V
OLD)	C575	1-131-360-00 s TANTALUM 15uF 20% 25V
210)	C575	1-124-234-00 s ELECT 22uF 20% 16V
605)	C575	1-126-514-11 s ELECT 22uF 20% 16V

(AE-12 BOARD)

OLD)	C585	1-131-360-00 s TANTALUM 15uF 20% 25V
210)	C585	1-124-234-00 s ELECT 22uF 20% 16V
605)	C585	1-126-514-11 s ELECT 22uF 20% 16V
OLD)	C602	1-124-234-00 s ELECT 22uF 20% 16V
203)	C602	DELETED.
OLD)	C603	1-124-234-00 s ELECT 22uF 20% 16V
605)	C603	1-126-514-11 s ELECT 22uF 20% 16V
OLD)	C604	1-124-234-00 s ELECT 22uF 20% 16V
605)	C604	1-126-514-11 s ELECT 22uF 20% 16V
OLD)	C605	1-124-234-00 s ELECT 22uF 20% 16V
210)	C605	DELETED.
OLD)	C606	1-124-234-00 s ELECT 22uF 20% 16V
210)	C606	DELETED.
OLD)	C607	1-124-234-00 s ELECT 22uF 20% 16V
605)	C607	1-126-514-11 s ELECT 22uF 20% 16V
OLD)	C608	1-124-234-00 s ELECT 22uF 20% 16V
605)	C608	1-126-514-11 s ELECT 22uF 20% 16V
OLD)	IC200	8-759-982-25 s IC RC78L09A
203)	IC200	DELETED.
OLD)	IC201	8-759-982-22 s IC RC78L06A
210)	IC201	8-759-708-06 s IC NJM78L06A
OLD)	IC202	8-759-982-47 s IC RC79L09A
203)	IC202	DELETED.
OLD)	JP3	NOT IN USE.
203)	JP3	1-566-388-11 s CONNECTOR 8P, MALE
OLD)	JP4	NOT IN USE.
203)	JP4	1-566-388-11 s CONNECTOR 8P, MALE
OLD)	JS2	NOT IN USE.
203)	JS2	1-563-859-11 s PLUG, SHORTING
OLD)	R109	1-216-647-11 s METAL, CHIP 680 0.5% 1/10W
210)	R109	1-216-045-00 s METAL, CHIP 680 5% 1/10W
OLD)	R116	1-216-647-11 s METAL, CHIP 680 0.5% 1/10W
210)	R116	1-216-045-00 s METAL, CHIP 680 5% 1/10W
OLD)	R125	1-216-655-11 s METAL, CHIP 1.5k 0.5% 1/10W
210)	R125	1-216-053-00 s METAL, CHIP 1.5k 5% 1/10W
OLD)	R126	1-216-647-11 s METAL, CHIP 680 0.5% 1/10W
210)	R126	1-216-045-00 s METAL, CHIP 680 5% 1/10W
OLD)	R127	1-216-647-11 s METAL, CHIP 680 0.5% 1/10W
210)	R127	1-216-045-00 s METAL, CHIP 680 5% 1/10W
OLD)	R128	1-216-655-11 s METAL, CHIP 1.5k 0.5% 1/10W
210)	R128	1-216-053-00 s METAL, CHIP 1.5k 5% 1/10W
OLD)	R135	1-216-655-11 s METAL, CHIP 1.5k 0.5% 1/10W
210)	R135	1-216-053-00 s METAL, CHIP 1.5k 5% 1/10W
OLD)	R136	1-216-647-11 s METAL, CHIP 680 0.5% 1/10W
210)	R136	1-216-045-00 s METAL, CHIP 680 5% 1/10W
OLD)	R137	1-216-647-11 s METAL, CHIP 680 0.5% 1/10W
210)	R137	1-216-045-00 s METAL, CHIP 680 5% 1/10W
OLD)	R138	1-216-655-11 s METAL, CHIP 1.5k 0.5% 1/10W
210)	R138	1-216-053-00 s METAL, CHIP 1.5k 5% 1/10W
OLD)	R200	1-216-691-11 s METAL, CHIP 47k 0.5% 1/10W
210)	R200	1-216-089-00 s METAL, CHIP 47k 5% 1/10W
OLD)	R306	1-216-627-11 s METAL, CHIP 100 0.5% 1/10W
210)	R306	1-216-025-00 s METAL, CHIP 100 5% 1/10W

(AE-12 BOARD)

OLD)	R307	1-216-627-11 s METAL, CHIP 100 0.5% 1/10W
210)	R307	1-216-025-00 s METAL, CHIP 100 5% 1/10W
OLD)	R308	1-216-627-11 s METAL, CHIP 100 0.5% 1/10W
210)	R308	1-216-025-00 s METAL, CHIP 100 5% 1/10W
OLD)	R309	1-216-627-11 s METAL, CHIP 100 0.5% 1/10W
210)	R309	1-216-025-00 s METAL, CHIP 100 5% 1/10W
OLD)	R353	1-215-435-00 s METAL 3.9k 1% 1/6W
203)	R353	1-216-665-11 s METAL, CHIP 3.9k 0.5% 1/10W
210)	R353	1-216-063-00 s METAL, CHIP 3.9k 5% 1/10W
OLD)	R410	1-216-691-11 s METAL, CHIP 47k 0.5% 1/10W
210)	R410	1-216-089-00 s METAL, CHIP 47k 5% 1/10W
OLD)	R452	1-216-627-11 s METAL, CHIP 100 0.5% 1/10W
210)	R452	1-216-025-00 s METAL, CHIP 100 5% 1/10W
OLD)	R453	1-216-627-11 s METAL, CHIP 100 0.5% 1/10W
210)	R453	1-216-025-00 s METAL, CHIP 100 5% 1/10W
OLD)	R455	1-216-627-11 s METAL, CHIP 100 0.5% 1/10W
210)	R455	1-216-025-00 s METAL, CHIP 100 5% 1/10W
OLD)	R500	1-216-627-11 s METAL, CHIP 100 0.5% 1/10W
210)	R500	1-216-025-00 s METAL, CHIP 100 5% 1/10W
OLD)	R501	1-216-655-11 s METAL, CHIP 1.5k 0.5% 1/10W
210)	R501	1-216-053-00 s METAL, CHIP 1.5k 5% 1/10W
OLD)	R509	1-216-627-11 s METAL, CHIP 100 0.5% 1/10W
210)	R509	1-216-025-00 s METAL, CHIP 100 5% 1/10W
OLD)	R510	1-216-627-11 s METAL, CHIP 100 0.5% 1/10W
210)	R510	1-216-025-00 s METAL, CHIP 100 5% 1/10W
OLD)	R511	1-216-627-11 s METAL, CHIP 100 0.5% 1/10W
210)	R511	1-216-025-00 s METAL, CHIP 100 5% 1/10W
OLD)	R512	1-216-627-11 s METAL, CHIP 100 0.5% 1/10W
210)	R512	1-216-025-00 s METAL, CHIP 100 5% 1/10W
OLD)	R536	NOT IN USE.
203)	R536	1-216-658-11 s METAL, CHIP 2k 0.5% 1/10W
OLD)	R554	1-216-627-11 s METAL, CHIP 100 0.5% 1/10W
210)	R554	1-216-025-00 s METAL, CHIP 100 5% 1/10W
OLD)	R558	1-216-627-11 s METAL, CHIP 100 0.5% 1/10W
210)	R558	1-216-025-00 s METAL, CHIP 100 5% 1/10W
OLD)	R606	1-216-645-11 s METAL, CHIP 560 0.5% 1/10W
210)	R606	1-216-043-00 s METAL, CHIP 560 5% 1/10W
OLD)	R607	1-216-675-11 s METAL, CHIP 10k 0.5% 1/10W
203)	R607	DELETED.
OLD)	R608	1-216-675-11 s METAL, CHIP 10k 0.5% 1/10W
203)	R608	DELETED.
OLD)	R609	1-216-682-11 s METAL, CHIP 20k 0.5% 1/10W
203)	R609	DELETED.
OLD)	R615	1-215-445-00 s METAL 10k 1% 1/6W
203)	R615	1-216-675-11 s METAL, CHIP 10k 0.5% 1/10W
OLD)	R616	1-215-438-00 s METAL 5.1k 1% 1/6W
203)	R616	1-216-668-11 s METAL, CHIP 5.1k 0.5% 1/10W
OLD)	RV510	1-228-457-00 s RES, ADJ METAL 2k
203)	RV510	DELETED.

AU-133 BOARD

OLD)	1pc	A-6019-045-A	o MOUNTED CIRCUIT BOARD, AU-13
106)	1pc	A-6019-045-B	o MOUNTED CIRCUIT BOARD, AU-13

*The new board is upward compatible with the former one.
See section 22 for details.

OLD)	22pcs	1-526-816-21	o SOCKET, IC (DP) 24P
210)	22pcs	DELETED.	
OLD)	2pcs	1-526-656-00	o SOCKET, IC (DP) 20P
210)	2pcs	DELETED.	
OLD)	3pcs	1-526-659-00	o SOCKET, IC 28P
210)	3pcs	DELETED.	
OLD)	5pcs	1-540-187-21	o SOCKET, IC (DP) 28P
210)	5pcs	DELETED.	
OLD)	C190	NOT IN USE.	
503)	C190	1-162-712-11	s SERAMIC 120pF 1% 50V
OLD)	ICK11	8-752-328-01	s IC CXK51256P-55
211)	ICK11	8-759-164-95	s IC UPD43251BCR-15
OLD)	ICR18	8-752-333-48	s IC CXK5464AP-35
211)	ICR18	8-759-164-96	s IC TC55416P-25
503)	ICR18	8-759-299-49	s IC CY7C164-25PC

CN-508 BOARD

OLD)	C1	1-124-589-11	s ELECT 47uF 20% 16V
605)	C1	1-126-786-11	s ELECT 47uF 20% 16V
OLD)	C2	1-124-589-11	s ELECT 47uF 20% 16V
605)	C2	1-126-786-11	s ELECT 47uF 20% 16V
OLD)	C3	1-124-257-00	s ELECT 47uF 20% 16V
605)	C3	1-126-785-11	s ELECT 47uF 20% 16V
OLD)	C7	1-124-589-11	s ELECT 47uF 20% 16V
605)	C7	1-126-786-11	s ELECT 47uF 20% 16V
OLD)	C9	1-124-257-00	s ELECT 2.2uF 20% 50V
605)	C9	1-115-872-11	s ELECT 2.2uF 20% 50V
OLD)	C10	1-124-257-00	s ELECT 2.2uF 20% 50V
605)	C10	1-115-872-11	s ELECT 2.2uF 20% 50V
OLD)	C18	1-126-301-11	s ELECT 1uF 20% 50V
605)	C18	1-115-871-11	s ELECT 1uF 20% 50V
OLD)	C19	1-126-301-11	s ELECT 1uF 20% 50V
605)	C19	1-115-871-11	s ELECT 1uF 20% 50V
OLD)	C20	1-126-301-11	s ELECT 1uF 20% 50V
605)	C20	1-115-871-11	s ELECT 1uF 20% 50V
OLD)	C21	1-124-257-00	s ELECT 2.2uF 20% 50V
605)	C21	1-115-872-11	s ELECT 2.2uF 20% 50V
OLD)	IC3	8-759-982-22	s IC RC78L06A
210)	IC3	8-759-708-06	s IC NJM78L06A
OLD)	IC6	8-759-133-90	s IC UPC339C
210)	IC6	8-759-984-03	s IC LM339N

CP-156 BOARD

OLD)	C3	1-124-234-00	s ELECT 22uF 20% 16V
201)	C3	1-124-455-00	s ELECT 100uF 20% 16V
OLD)	IC7	8-759-323-86	s IC HM514402ZP-10
306)	IC7	8-759-247-02	s IC HM514402BZ-8
OLD)	IC8	8-759-323-86	s IC HM514402ZP-10
306)	IC8	8-759-247-02	s IC HM514402BZ-8
OLD)	IC9	8-759-078-94	s IC 27C4096-CP15609V1.23 EPROM
210)	IC9	8-759-186-92	o IC 27C4096-CP15609V2.20 EPROM
OLD)	IC10	NOT IN USE.	
210)	IC10	8-759-186-93	o IC 27C4096-CP15610V2.20 EPROM
OLD)	IC14	8-759-519-33	s IC DS1230Y
210)	IC14	8-759-158-11	s IC BQ4011YMA-100, NOVRAM

CT-133 BOARD

OLD)	C7	1-161-473-00	s CERAMIC 0.01uF 10% 50V
102)	C7	1-162-794-11	s CERAMIC 0.01uF 10% 50V

DD-11 BOARD

OLD)	C604	1-124-907-11	s ELECT 10uF 20% 50V
605)	C604	1-126-964-11	s ELECT 10uF 20% 50V
OLD)	C609	1-161-744-51	s CERAMIC 0.01uF 400V
605)	C609	1-113-916-11	s CERAMIC 0.01uF 400V
OLD)	C611	1-161-744-51	s CERAMIC 0.01uF 400V
605)	C611	1-113-916-11	s CERAMIC 0.01uF 400V
OLD)	C616	NOT IN USE.	
107)	C616	1-130-471-00	s MYLAR 0.001uF 5% 50V
OLD)	R604	1-249-433-11	s CARBON 22k 5% 1/4W
605)	R604	1-247-863-91	s CARBON 22k 5% 1/4W
OLD)	R702	1-249-433-11	s CARBON 22k 5% 1/4W
605)	R702	1-247-863-91	s CARBON 22k 5% 1/4W
OLD)	R802	1-249-433-11	s CARBON 22k 5% 1/4W
605)	R802	1-247-863-91	s CARBON 22k 5% 1/4W

DEC-56 BOARD

OLD)	C1	1-124-522-11	s ELECT 270uF 20% 16V
210)	C1	1-126-941-11	s ELECT 470uF 20% 25V
OLD)	C2	1-124-522-11	s ELECT 270uF 20% 16V
210)	C2	1-126-941-11	s ELECT 470uF 20% 25V
OLD)	C3	1-124-522-11	s ELECT 270uF 20% 16V
210)	C3	1-126-941-11	s ELECT 470uF 20% 25V
OLD)	C4	1-124-522-11	s ELECT 270uF 20% 16V
210)	C4	1-126-941-11	s ELECT 470uF 20% 25V
OLD)	C6	1-163-038-00	s CERAMIC, CHIP 0.1uF 25V
210)	C6	DELETED.	
OLD)	C8	1-163-038-00	s CERAMIC, CHIP 0.1uF 25V
210)	C8	DELETED.	

(DEC-56 BOARD)

OLD)	C9	1-163-038-00 s CERAMIC, CHIP 0.1uF 25V
210)	C9	DELETED.
OLD)	C12	1-163-038-00 s CERAMIC, CHIP 0.1uF 25V
210)	C12	DELETED.
OLD)	C14	1-163-038-00 s CERAMIC, CHIP 0.1uF 25V
210)	C14	DELETED.
OLD)	C17	1-163-038-00 s CERAMIC, CHIP 0.1uF 25V
210)	C17	DELETED.
OLD)	C21	1-163-038-00 s CERAMIC, CHIP 0.1uF 25V
210)	C21	DELETED.
OLD)	C23	1-163-038-00 s CERAMIC, CHIP 0.1uF 25V
210)	C23	DELETED.
OLD)	C25	1-163-038-00 s CERAMIC, CHIP 0.1uF 25V
210)	C25	DELETED.
OLD)	C26	1-163-038-00 s CERAMIC, CHIP 0.1uF 25V
210)	C26	DELETED.
OLD)	C31	1-163-038-00 s CERAMIC, CHIP 0.1uF 25V
210)	C31	DELETED.
OLD)	C37	1-163-038-00 s CERAMIC, CHIP 0.1uF 25V
210)	C37	DELETED.
OLD)	C38	1-163-038-00 s CERAMIC, CHIP 0.1uF 25V
210)	C38	DELETED.
OLD)	C39	1-163-038-00 s CERAMIC, CHIP 0.1uF 25V
210)	C39	DELETED.
OLD)	C41	1-163-038-00 s CERAMIC, CHIP 0.1uF 25V
210)	C41	DELETED.
OLD)	C42	1-163-038-00 s CERAMIC, CHIP 0.1uF 25V
210)	C42	DELETED.
OLD)	C45	1-163-038-00 s CERAMIC, CHIP 0.1uF 25V
210)	C45	DELETED.
OLD)	C48	1-163-038-00 s CERAMIC, CHIP 0.1uF 25V
210)	C48	DELETED.
OLD)	C49	1-163-038-00 s CERAMIC, CHIP 0.1uF 25V
210)	C49	DELETED.
OLD)	C51	1-163-038-00 s CERAMIC, CHIP 0.1uF 25V
210)	C51	DELETED.
OLD)	C55	1-163-038-00 s CERAMIC, CHIP 0.1uF 25V
210)	C55	DELETED.
OLD)	C60	1-163-038-00 s CERAMIC, CHIP 0.1uF 25V
210)	C60	DELETED.
OLD)	C62	1-163-038-00 s CERAMIC, CHIP 0.1uF 25V
210)	C62	DELETED.
OLD)	C67	1-163-038-00 s CERAMIC, CHIP 0.1uF 25V
210)	C67	DELETED.
OLD)	C71	1-163-038-00 s CERAMIC, CHIP 0.1uF 25V
210)	C71	DELETED.
OLD)	C76	1-163-038-00 s CERAMIC, CHIP 0.1uF 25V
210)	C76	DELETED.
OLD)	C82	1-163-038-00 s CERAMIC, CHIP 0.1uF 25V
210)	C82	DELETED.
OLD)	C84	1-163-038-00 s CERAMIC, CHIP 0.1uF 25V
210)	C84	DELETED.
OLD)	C87	1-163-038-00 s CERAMIC, CHIP 0.1uF 25V
210)	C87	DELETED.

(DEC-56 BOARD)

OLD)	C89	1-163-038-00 s CERAMIC, CHIP 0.1uF 25V
210)	C89	DELETED.
OLD)	C94	1-163-038-00 s CERAMIC, CHIP 0.1uF 25V
210)	C94	DELETED.
OLD)	C97	1-163-038-00 s CERAMIC, CHIP 0.1uF 25V
210)	C97	DELETED.
OLD)	C99	1-163-038-00 s CERAMIC, CHIP 0.1uF 25V
210)	C99	DELETED.
OLD)	C107	1-163-038-00 s CERAMIC, CHIP 0.1uF 25V
210)	C107	DELETED.
OLD)	C113	1-163-038-00 s CERAMIC, CHIP 0.1uF 25V
210)	C113	DELETED.
OLD)	C115	1-163-038-00 s CERAMIC, CHIP 0.1uF 25V
210)	C115	DELETED.
OLD)	C117	1-163-038-00 s CERAMIC, CHIP 0.1uF 25V
210)	C117	DELETED.
OLD)	C118	1-163-038-00 s CERAMIC, CHIP 0.1uF 25V
210)	C118	DELETED.
OLD)	C121	1-163-038-00 s CERAMIC, CHIP 0.1uF 25V
210)	C121	DELETED.
OLD)	C122	1-163-038-00 s CERAMIC, CHIP 0.1uF 25V
210)	C122	DELETED.
OLD)	C126	1-163-038-00 s CERAMIC, CHIP 0.1uF 25V
210)	C126	DELETED.
OLD)	C130	1-163-038-00 s CERAMIC, CHIP 0.1uF 25V
210)	C130	DELETED.
OLD)	C132	1-163-038-00 s CERAMIC, CHIP 0.1uF 25V
210)	C132	DELETED.
OLD)	C134	1-163-038-00 s CERAMIC, CHIP 0.1uF 25V
210)	C134	DELETED.
OLD)	C135	1-163-038-00 s CERAMIC, CHIP 0.1uF 25V
210)	C135	DELETED.
OLD)	C137	1-163-038-00 s CERAMIC, CHIP 0.1uF 25V
210)	C137	DELETED.
OLD)	C140	1-163-038-00 s CERAMIC, CHIP 0.1uF 25V
210)	C140	DELETED.
OLD)	C142	1-163-038-00 s CERAMIC, CHIP 0.1uF 25V
210)	C142	DELETED.
OLD)	C146	1-163-038-00 s CERAMIC, CHIP 0.1uF 25V
210)	C146	DELETED.
OLD)	C148	1-163-038-00 s CERAMIC, CHIP 0.1uF 25V
210)	C148	DELETED.
OLD)	C151	1-163-038-00 s CERAMIC, CHIP 0.1uF 25V
210)	C151	DELETED.
OLD)	C152	1-163-038-00 s CERAMIC, CHIP 0.1uF 25V
210)	C152	DELETED.
OLD)	C154	1-163-038-00 s CERAMIC, CHIP 0.1uF 25V
210)	C154	DELETED.
OLD)	C168	1-163-038-00 s CERAMIC, CHIP 0.1uF 25V
210)	C168	DELETED.
OLD)	C171	1-163-038-00 s CERAMIC, CHIP 0.1uF 25V
210)	C171	DELETED.
OLD)	C172	1-163-038-00 s CERAMIC, CHIP 0.1uF 25V
210)	C172	DELETED.

(DEC-56 BOARD)

OLD)	C173	1-163-038-00 s CERAMIC, CHIP 0.1uF 25V
210)	C173	DELETED.
OLD)	C174	1-163-038-00 s CERAMIC, CHIP 0.1uF 25V
210)	C174	DELETED.
OLD)	C176	1-163-038-00 s CERAMIC, CHIP 0.1uF 25V
210)	C176	DELETED.
OLD)	C178	1-163-038-00 s CERAMIC, CHIP 0.1uF 25V
210)	C178	DELETED.
OLD)	C180	1-163-038-00 s CERAMIC, CHIP 0.1uF 25V
210)	C180	DELETED.
OLD)	ICJ20	8-752-328-01 s IC CXK51256P-55
211)	ICJ20	8-759-164-95 s IC UPD43251BCR-15
OLD)	ICK20	8-752-328-01 s IC CXK51256P-55
211)	ICK20	8-759-164-95 s IC UPD43251BCR-15
OLD)	ICL1	8-759-045-27 s IC UPD431000AGW-70L
310)	ICL1	8-752-364-81 s IC CXK581000AM-70L
OLD)	ICL3	8-759-045-27 s IC UPD431000AGW-70L
310)	ICL3	8-752-364-81 s IC CXK581000AM-70L
OLD)	ICL4	8-759-045-27 s IC UPD431000AGW-70L
310)	ICL4	8-752-364-81 s IC CXK581000AM-70L
OLD)	ICL7	8-759-045-27 s IC UPD431000AGW-70L
310)	ICL7	8-752-364-81 s IC CXK581000AM-70L
OLD)	ICL8	8-759-045-27 s IC UPD431000AGW-70L
310)	ICL8	8-752-364-81 s IC CXK581000AM-70L
OLD)	ICL9	8-759-045-27 s IC UPD431000AGW-70L
310)	ICL9	8-752-364-81 s IC CXK581000AM-70L
OLD)	ICL12	8-759-045-27 s IC UPD431000AGW-70L
310)	ICL12	8-752-364-81 s IC CXK581000AM-70L
OLD)	ICL13	8-759-045-27 s IC UPD431000AGW-70L
310)	ICL13	8-752-364-81 s IC CXK581000AM-70L
OLD)	ICL14	8-759-045-27 s IC UPD431000AGW-70L
310)	ICL14	8-752-364-81 s IC CXK581000AM-70L
OLD)	ICL16	8-759-045-27 s IC UPD431000AGW-70L
310)	ICL16	8-752-364-81 s IC CXK581000AM-70L
OLD)	ICL18	8-759-045-27 s IC UPD431000AGW-70L
310)	ICL18	8-752-364-81 s IC CXK581000AM-70L
OLD)	ICL19	8-759-045-27 s IC UPD431000AGW-70L
310)	ICL19	8-752-364-81 s IC CXK581000AM-70L
OLD)	ICM1	8-759-045-27 s IC UPD431000AGW-70L
310)	ICM1	8-752-364-81 s IC CXK581000AM-70L
OLD)	ICM3	8-759-045-27 s IC UPD431000AGW-70L
310)	ICM3	8-752-364-81 s IC CXK581000AM-70L
OLD)	ICM4	8-759-045-27 s IC UPD431000AGW-70L
310)	ICM4	8-752-364-81 s IC CXK581000AM-70L
OLD)	ICM6	8-752-328-01 s IC CXK51256P-55
211)	ICM6	8-759-164-95 s IC UPD43251BCR-15
OLD)	ICM7	8-759-045-27 s IC UPD431000AGW-70L
310)	ICM7	8-752-364-81 s IC CXK581000AM-70L
OLD)	ICM8	8-759-045-27 s IC UPD431000AGW-70L
310)	ICM8	8-752-364-81 s IC CXK581000AM-70L
OLD)	ICM9	8-759-045-27 s IC UPD431000AGW-70L
310)	ICM9	8-752-364-81 s IC CXK581000AM-70L
OLD)	ICM11	8-752-328-01 s IC CXK51256P-55
211)	ICM11	8-759-164-95 s IC UPD43251BCR-15

(DEC-56 BOARD)

OLD)	ICM12	8-759-045-27 s IC UPD431000AGW-70L
310)	ICM12	8-752-364-81 s IC CXK581000AM-70L
OLD)	ICM13	8-759-045-27 s IC UPD431000AGW-70L
310)	ICM13	8-752-364-81 s IC CXK581000AM-70L
OLD)	ICM14	8-759-045-27 s IC UPD431000AGW-70L
310	ICM14	8-752-364-81 s IC CXK581000AM-70L
OLD)	ICM15	8-752-328-01 s IC CXK51256P-55
211)	ICM15	8-759-164-95 s IC UPD43251BCR-15
OLD)	ICM16	8-759-045-27 s IC UPD431000AGW-70L
310)	ICM16	8-752-364-81 s IC CXK581000AM-70L
OLD)	ICM18	8-759-045-27 s IC UPD431000AGW-70L
310)	ICM18	8-752-364-81 s IC CXK581000AM-70L
OLD)	ICM19	8-759-045-27 s IC UPD431000AGW-70L
310)	ICM19	8-752-364-81 s IC CXK581000AM-70L
OLD)	ICM20	8-752-328-01 s IC CXK51256P-55
211)	ICM20	8-759-164-95 s IC UPD43251BCR-15
OLD)	ICN1	8-759-045-27 s IC UPD431000AGW-70L
310)	ICN1	8-752-364-81 s IC CXK581000AM-70L
OLD)	ICN3	8-759-045-27 s IC UPD431000AGW-70L
310)	ICN3	8-752-364-81 s IC CXK581000AM-70L
OLD)	ICN4	8-752-328-01 s IC CXK51256P-55
211)	ICN4	8-759-164-95 s IC UPD43251BCR-15
OLD)	ICN5	8-752-328-01 s IC CXK51256P-55
211)	ICN5	8-759-164-95 s IC UPD43251BCR-15
OLD)	ICN6	8-752-328-01 s IC CXK51256P-55
211)	ICN6	8-759-164-95 s IC UPD43251BCR-15
OLD)	ICN7	8-759-045-27 s IC UPD431000AGW-70L
310)	ICN7	8-752-364-81 s IC CXK581000AM-70L
OLD)	ICN8	8-759-045-27 s IC UPD431000AGW-70L
310)	ICN8	8-752-364-81 s IC CXK581000AM-70L
OLD)	ICN9	8-752-328-01 s IC CXK51256P-55
211)	ICN9	8-759-164-95 s IC UPD43251BCR-15
OLD)	ICN10	8-752-328-01 s IC CXK51256P-55
211)	ICN10	8-759-164-95 s IC UPD43251BCR-15
OLD)	ICN11	8-752-328-01 s IC CXK51256P-55
211)	ICN11	8-759-164-95 s IC UPD43251BCR-15
OLD)	ICN12	8-759-045-27 s IC UPD431000AGW-70L
310)	ICN12	8-752-364-81 s IC CXK581000AM-70L
OLD)	ICN13	8-759-045-27 s IC UPD431000AGW-70L
310)	ICN13	8-752-364-81 s IC CXK581000AM-70L
OLD)	ICN14A	8-752-328-01 s IC CXK51256P-55
211)	ICN14A	8-759-164-95 s IC UPD43251BCR-15
OLD)	ICN14B	8-752-328-01 s IC CXK51256P-55
211)	ICN14B	8-759-164-95 s IC UPD43251BCR-15
OLD)	ICN15	8-752-328-01 s IC CXK51256P-55
211)	ICN15	8-759-164-95 s IC UPD43251BCR-15
OLD)	ICN16	8-759-045-27 s IC UPD431000AGW-70L
310)	ICN16	8-752-364-81 s IC CXK581000AM-70L
OLD)	ICN18	8-759-045-27 s IC UPD431000AGW-70L
310)	ICN18	8-752-364-81 s IC CXK581000AM-70L
OLD)	ICN19	8-752-328-01 s IC CXK51256P-55
211)	ICN19	8-759-164-95 s IC UPD43251BCR-15
OLD)	R23	1-215-445-00 s METAL 10k 1% 1/6W
210)	R23	1-249-429-11 s CARBON 10k 5% 1/4W

DET-11 BOARD

OLD)	1pc	1-633-840-12 o	PRINTED CIRCUIT BOARD, DET-11
210)	1pc	1-633-840-13 o	PRINTED CIRCUIT BOARD, DET-11

*The new board is upward compatible with the former one.
See section 22 for details.

OLD)	C1	1-163-275-11 s	CERAMIC, CHIP 0.001uF 5% 50V
210)	C1	1-163-011-11 s	CERAMIC 0.0015uF 10% 50V
OLD)	C2	1-126-154-11 s	ELECT 47uF 20% 6.3V
210)	C2	1-163-011-11 s	CERAMIC 0.0015uF 10% 50V
OLD)	C3	NOT IN USE.	
210)	C3	1-126-154-11 s	ELECT 47uF 20% 6.3V
OLD)	C4	NOT IN USE.	
210)	C4	1-163-011-11 s	CERAMIC 0.0015uF 10% 50V
OLD)	IC1	8-759-103-93 s	IC UPC393C
210)	IC1	8-759-983-74 s	IC LM324NS
OLD)	R2	1-216-065-00 s	METAL, CHIP 4.7k 5% 1/10W
210)	R2	1-216-057-00 s	METAL, CHIP 2.2k 5% 1/10W
OLD)	R3	1-216-065-00 s	METAL, CHIP 4.7k 5% 1/10W
210)	R3	1-216-057-00 s	METAL, CHIP 2.2k 5% 1/10W
OLD)	R4	1-216-105-00 s	METAL, CHIP 220k 5% 1/10W
210)	R4	1-249-425-11 s	CARBON 4.7k 5% 1/4W
OLD)	R5	1-216-659-11 s	METAL, CHIP 2.2k 0.5% 1/10W
210)	R5	1-216-097-00 s	METAL, CHIP 100k 5% 1/10W
OLD)	R6	1-216-659-11 s	METAL, CHIP 2.2k 0.5% 1/10W
210)	R6	1-216-057-00 s	METAL, CHIP 2.2k 5% 1/10W
OLD)	R7	1-216-659-11 s	METAL, CHIP 2.2k 0.5% 1/10W
210)	R7	1-216-057-00 s	METAL, CHIP 2.2k 5% 1/10W
OLD)	R8	1-216-659-11 s	METAL, CHIP 2.2k 0.5% 1/10W
210)	R8	1-216-073-00 s	METAL, CHIP 10k 5% 1/10W
OLD)	R9	1-216-033-00 s	METAL, CHIP 220 5% 1/10W
210)	R9	1-216-105-00 s	METAL, CHIP 220k 5% 1/10W
OLD)	R10	1-216-065-00 s	METAL, CHIP 4.7k 5% 1/10W
210)	R10	1-216-057-00 s	METAL, CHIP 2.2k 5% 1/10W
OLD)	R11	NOT IN USE.	
210)	R11	1-216-057-00 s	METAL, CHIP 2.2k 5% 1/10W
OLD)	R12	NOT IN USE.	
210)	R12	1-249-425-11 s	CARBON 4.7k 5% 1/4W
OLD)	R13	NOT IN USE.	
210)	R13	1-216-097-00 s	METAL, CHIP 100k 5% 1/10W
OLD)	R14	NOT IN USE.	
210)	R14	1-216-057-00 s	METAL, CHIP 2.2k 5% 1/10W
OLD)	R15	NOT IN USE.	
210)	R15	1-216-057-00 s	METAL, CHIP 2.2k 5% 1/10W
OLD)	R16	NOT IN USE.	
210)	R16	1-216-073-00 s	METAL, CHIP 10k 5% 1/10W
OLD)	R17	NOT IN USE.	
210)	R17	1-216-065-00 s	METAL, CHIP 4.7k 5% 1/10W
OLD)	R18	NOT IN USE.	
210)	R18	1-216-033-00 s	METAL, CHIP 220 5% 1/10W
OLD)	R19	NOT IN USE.	
210)	R19	1-249-406-11 s	CARBON 120 5% 1/4W

DT-26 BOARD

OLD)	2pcs	1-526-654-00 s	SOCKET, IC (DP) 16P
110)	2pcs	DELETED.	
OLD)	4pcs	1-526-655-00 s	SOCKET, IC (DP) 18P
204)	4pcs	DELETED.	
OLD)	11pcs	1-526-656-00 o	SOCKET, IC (DP) 20P
204)	11pcs	2pcs	
OLD)	2pcs	1-526-659-00 o	SOCKET, IC 28P
204)	2pcs	1pc	
OLD)	1pc	1-540-029-11 o	SOCKET, IC (PGA) 68P
204)	1pc	1-526-997-11 s	SOCKET, IC 68P
OLD)	C101	1-164-004-11 s	CERAMIC, CHIP 0.1uF 10% 25V
204)	C101	1-163-038-00 s	CERAMIC, CHIP 0.1uF 25V
OLD)	C102	1-164-004-11 s	CERAMIC, CHIP 0.1uF 10% 25V
204)	C102	1-163-038-00 s	CERAMIC, CHIP 0.1uF 25V
OLD)	C103	1-164-004-11 s	CERAMIC, CHIP 0.1uF 10% 25V
204)	C103	1-163-038-00 s	CERAMIC, CHIP 0.1uF 25V
OLD)	C104	1-164-004-11 s	CERAMIC, CHIP 0.1uF 10% 25V
204)	C104	1-163-038-00 s	CERAMIC, CHIP 0.1uF 25V
OLD)	C105	1-164-004-11 s	CERAMIC, CHIP 0.1uF 10% 25V
204)	C105	1-163-038-00 s	CERAMIC, CHIP 0.1uF 25V
OLD)	C106	1-164-004-11 s	CERAMIC, CHIP 0.1uF 10% 25V
204)	C106	1-163-038-00 s	CERAMIC, CHIP 0.1uF 25V
OLD)	C107	1-164-004-11 s	CERAMIC, CHIP 0.1uF 10% 25V
204)	C107	1-163-038-00 s	CERAMIC, CHIP 0.1uF 25V
OLD)	C108	1-164-004-11 s	CERAMIC, CHIP 0.1uF 10% 25V
204)	C108	1-163-038-00 s	CERAMIC, CHIP 0.1uF 25V
OLD)	C109	1-164-004-11 s	CERAMIC, CHIP 0.1uF 10% 25V
204)	C109	1-163-038-00 s	CERAMIC, CHIP 0.1uF 25V
OLD)	C110	1-164-004-11 s	CERAMIC, CHIP 0.1uF 10% 25V
204)	C110	1-163-038-00 s	CERAMIC, CHIP 0.1uF 25V
OLD)	C111	1-164-004-11 s	CERAMIC, CHIP 0.1uF 10% 25V
204)	C111	1-163-038-00 s	CERAMIC, CHIP 0.1uF 25V
OLD)	C112	1-164-004-11 s	CERAMIC, CHIP 0.1uF 10% 25V
204)	C112	1-163-038-00 s	CERAMIC, CHIP 0.1uF 25V
OLD)	C113	1-164-004-11 s	CERAMIC, CHIP 0.1uF 10% 25V
204)	C113	1-163-038-00 s	CERAMIC, CHIP 0.1uF 25V
OLD)	C114	1-164-004-11 s	CERAMIC, CHIP 0.1uF 10% 25V
204)	C114	1-163-038-00 s	CERAMIC, CHIP 0.1uF 25V
OLD)	C115	1-164-004-11 s	CERAMIC, CHIP 0.1uF 10% 25V
204)	C115	1-163-038-00 s	CERAMIC, CHIP 0.1uF 25V
OLD)	C116	1-164-004-11 s	CERAMIC, CHIP 0.1uF 10% 25V
204)	C116	1-163-038-00 s	CERAMIC, CHIP 0.1uF 25V
OLD)	C117	1-164-004-11 s	CERAMIC, CHIP 0.1uF 10% 25V
204)	C117	1-163-038-00 s	CERAMIC, CHIP 0.1uF 25V
OLD)	C118	1-164-004-11 s	CERAMIC, CHIP 0.1uF 10% 25V
204)	C118	1-163-038-00 s	CERAMIC, CHIP 0.1uF 25V
OLD)	C119	1-164-004-11 s	CERAMIC, CHIP 0.1uF 10% 25V
204)	C119	1-163-038-00 s	CERAMIC, CHIP 0.1uF 25V
OLD)	C120	1-164-004-11 s	CERAMIC, CHIP 0.1uF 10% 25V
204)	C120	1-163-038-00 s	CERAMIC, CHIP 0.1uF 25V
OLD)	C129	1-164-004-11 s	CERAMIC, CHIP 0.1uF 10% 25V
204)	C129	1-163-038-00 s	CERAMIC, CHIP 0.1uF 25V
OLD)	C130	1-164-004-11 s	CERAMIC, CHIP 0.1uF 10% 25V
204)	C130	1-163-038-00 s	CERAMIC, CHIP 0.1uF 25V

OLD)	C131	1-164-004-11 s CERAMIC, CHIP 0.1uF 10% 25V
204)	C131	1-163-038-00 s CERAMIC, CHIP 0.1uF 25V
OLD)	C132	1-164-004-11 s CERAMIC, CHIP 0.1uF 10% 25V
204)	C132	1-163-038-00 s CERAMIC, CHIP 0.1uF 25V
OLD)	C133	1-164-004-11 s CERAMIC, CHIP 0.1uF 10% 25V
204)	C133	1-163-038-00 s CERAMIC, CHIP 0.1uF 25V
OLD)	C134	1-164-004-11 s CERAMIC, CHIP 0.1uF 10% 25V
204)	C134	1-163-038-00 s CERAMIC, CHIP 0.1uF 25V
OLD)	C135	1-164-004-11 s CERAMIC, CHIP 0.1uF 10% 25V
204)	C135	1-163-038-00 s CERAMIC, CHIP 0.1uF 25V
OLD)	C136	1-164-004-11 s CERAMIC, CHIP 0.1uF 10% 25V
204)	C136	1-163-038-00 s CERAMIC, CHIP 0.1uF 25V
OLD)	C137	1-164-004-11 s CERAMIC, CHIP 0.1uF 10% 25V
204)	C137	1-163-038-00 s CERAMIC, CHIP 0.1uF 25V
OLD)	C138	1-164-004-11 s CERAMIC, CHIP 0.1uF 10% 25V
204)	C138	1-163-038-00 s CERAMIC, CHIP 0.1uF 25V
OLD)	C139	1-164-004-11 s CERAMIC, CHIP 0.1uF 10% 25V
204)	C139	1-163-038-00 s CERAMIC, CHIP 0.1uF 25V
OLD)	C140	1-164-004-11 s CERAMIC, CHIP 0.1uF 10% 25V
204)	C140	1-163-038-00 s CERAMIC, CHIP 0.1uF 25V
OLD)	C141	1-164-004-11 s CERAMIC, CHIP 0.1uF 10% 25V
204)	C141	1-163-038-00 s CERAMIC, CHIP 0.1uF 25V
OLD)	C142	1-164-004-11 s CERAMIC, CHIP 0.1uF 10% 25V
204)	C142	1-163-038-00 s CERAMIC, CHIP 0.1uF 25V
OLD)	C143	1-164-004-11 s CERAMIC, CHIP 0.1uF 10% 25V
204)	C143	1-163-038-00 s CERAMIC, CHIP 0.1uF 25V
OLD)	C144	1-164-004-11 s CERAMIC, CHIP 0.1uF 10% 25V
204)	C144	1-163-038-00 s CERAMIC, CHIP 0.1uF 25V
OLD)	C145	1-164-004-11 s CERAMIC, CHIP 0.1uF 10% 25V
204)	C145	1-163-038-00 s CERAMIC, CHIP 0.1uF 25V
OLD)	C146	1-164-004-11 s CERAMIC, CHIP 0.1uF 10% 25V
204)	C146	1-163-038-00 s CERAMIC, CHIP 0.1uF 25V
OLD)	C147	1-164-004-11 s CERAMIC, CHIP 0.1uF 10% 25V
204)	C147	1-163-038-00 s CERAMIC, CHIP 0.1uF 25V
OLD)	C148	1-164-004-11 s CERAMIC, CHIP 0.1uF 10% 25V
204)	C148	1-163-038-00 s CERAMIC, CHIP 0.1uF 25V
OLD)	C149	1-164-004-11 s CERAMIC, CHIP 0.1uF 10% 25V
204)	C149	1-163-038-00 s CERAMIC, CHIP 0.1uF 25V
OLD)	C150	1-164-004-11 s CERAMIC, CHIP 0.1uF 10% 25V
204)	C150	1-163-038-00 s CERAMIC, CHIP 0.1uF 25V
OLD)	C151	1-164-004-11 s CERAMIC, CHIP 0.1uF 10% 25V
204)	C151	1-163-038-00 s CERAMIC, CHIP 0.1uF 25V
OLD)	C152	1-164-004-11 s CERAMIC, CHIP 0.1uF 10% 25V
204)	C152	1-163-038-00 s CERAMIC, CHIP 0.1uF 25V
OLD)	C153	1-164-004-11 s CERAMIC, CHIP 0.1uF 10% 25V
204)	C153	1-163-038-00 s CERAMIC, CHIP 0.1uF 25V
OLD)	C154	1-164-004-11 s CERAMIC, CHIP 0.1uF 10% 25V
204)	C154	1-163-038-00 s CERAMIC, CHIP 0.1uF 25V
OLD)	C155	1-164-004-11 s CERAMIC, CHIP 0.1uF 10% 25V
204)	C155	1-163-038-00 s CERAMIC, CHIP 0.1uF 25V
OLD)	C156	1-164-004-11 s CERAMIC, CHIP 0.1uF 10% 25V
204)	C156	1-163-038-00 s CERAMIC, CHIP 0.1uF 25V
OLD)	C157	1-164-004-11 s CERAMIC, CHIP 0.1uF 10% 25V
204)	C157	1-163-038-00 s CERAMIC, CHIP 0.1uF 25V

(DT-26 BOARD)

OLD)	C158	1-164-004-11 s CERAMIC, CHIP 0.1uF 10% 25V
204)	C158	1-163-038-00 s CERAMIC, CHIP 0.1uF 25V
OLD)	C159	1-164-004-11 s CERAMIC, CHIP 0.1uF 10% 25V
204)	C159	1-163-038-00 s CERAMIC, CHIP 0.1uF 25V
OLD)	C160	1-164-004-11 s CERAMIC, CHIP 0.1uF 10% 25V
204)	C160	1-163-038-00 s CERAMIC, CHIP 0.1uF 25V
OLD)	C161	1-164-004-11 s CERAMIC, CHIP 0.1uF 10% 25V
204)	C161	1-163-038-00 s CERAMIC, CHIP 0.1uF 25V
OLD)	C162	1-164-004-11 s CERAMIC, CHIP 0.1uF 10% 25V
204)	C162	1-163-038-00 s CERAMIC, CHIP 0.1uF 25V
OLD)	C163	1-164-004-11 s CERAMIC, CHIP 0.1uF 10% 25V
204)	C163	1-163-038-00 s CERAMIC, CHIP 0.1uF 25V
OLD)	C164	1-164-004-11 s CERAMIC, CHIP 0.1uF 10% 25V
204)	C164	1-163-038-00 s CERAMIC, CHIP 0.1uF 25V
OLD)	C165	1-164-004-11 s CERAMIC, CHIP 0.1uF 10% 25V
204)	C165	1-163-038-00 s CERAMIC, CHIP 0.1uF 25V
OLD)	C166	1-164-004-11 s CERAMIC, CHIP 0.1uF 10% 25V
204)	C166	1-163-038-00 s CERAMIC, CHIP 0.1uF 25V
OLD)	C167	1-164-004-11 s CERAMIC, CHIP 0.1uF 10% 25V
204)	C167	1-163-038-00 s CERAMIC, CHIP 0.1uF 25V
OLD)	C168	1-164-004-11 s CERAMIC, CHIP 0.1uF 10% 25V
204)	C168	1-163-038-00 s CERAMIC, CHIP 0.1uF 25V
OLD)	C169	1-164-004-11 s CERAMIC, CHIP 0.1uF 10% 25V
204)	C169	1-163-038-00 s CERAMIC, CHIP 0.1uF 25V
OLD)	C170	1-164-004-11 s CERAMIC, CHIP 0.1uF 10% 25V
204)	C170	1-163-038-00 s CERAMIC, CHIP 0.1uF 25V
OLD)	C171	1-164-004-11 s CERAMIC, CHIP 0.1uF 10% 25V
204)	C171	1-163-038-00 s CERAMIC, CHIP 0.1uF 25V
OLD)	C172	1-164-004-11 s CERAMIC, CHIP 0.1uF 10% 25V
204)	C172	1-163-038-00 s CERAMIC, CHIP 0.1uF 25V
OLD)	C173	1-164-004-11 s CERAMIC, CHIP 0.1uF 10% 25V
204)	C173	1-163-038-00 s CERAMIC, CHIP 0.1uF 25V
OLD)	C174	1-164-004-11 s CERAMIC, CHIP 0.1uF 10% 25V
204)	C174	1-163-038-00 s CERAMIC, CHIP 0.1uF 25V
OLD)	C175	1-164-004-11 s CERAMIC, CHIP 0.1uF 10% 25V
204)	C175	1-163-038-00 s CERAMIC, CHIP 0.1uF 25V
OLD)	C176	1-164-004-11 s CERAMIC, CHIP 0.1uF 10% 25V
204)	C176	1-163-038-00 s CERAMIC, CHIP 0.1uF 25V
OLD)	C177	1-164-004-11 s CERAMIC, CHIP 0.1uF 10% 25V
204)	C177	1-163-038-00 s CERAMIC, CHIP 0.1uF 25V
OLD)	C178	1-164-004-11 s CERAMIC, CHIP 0.1uF 10% 25V
204)	C178	1-163-038-00 s CERAMIC, CHIP 0.1uF 25V
[[BOLD)	C179	1-164-004-11 s CERAMIC, CHIP 0.1uF 10% 25V
204)	C179	1-163-038-00 s CERAMIC, CHIP 0.1uF 25V
OLD)	C180	1-164-004-11 s CERAMIC, CHIP 0.1uF 10% 25V
204)	C180	1-163-038-00 s CERAMIC, CHIP 0.1uF 25V
OLD[B)	C181	1-164-004-11 s CERAMIC, CHIP 0.1uF 10% 25V
204)	C181	1-163-038-00 s CERAMIC, CHIP 0.1uF 25V
OLD)	C182	1-164-004-11 s CERAMIC, CHIP 0.1uF 10% 25V
204)	C182	1-163-038-00 s CERAMIC, CHIP 0.1uF 25V
OLD)	C183	1-164-004-11 s CERAMIC, CHIP 0.1uF 10% 25V
204)	C183	1-163-038-00 s CERAMIC, CHIP 0.1uF 25V
OLD)	C184	1-164-004-11 s CERAMIC, CHIP 0.1uF 10% 25V
204)	C184	1-163-038-00 s CERAMIC, CHIP 0.1uF 25V

OLD)	C185	1-164-004-11 s CERAMIC, CHIP 0.1uF 10% 25V
204)	C185	1-163-038-00 s CERAMIC, CHIP 0.1uF 25V
OLD)	C186	1-164-004-11 s CERAMIC, CHIP 0.1uF 10% 25V
204)	C186	1-163-038-00 s CERAMIC, CHIP 0.1uF 25V
OLD)	C187	1-164-004-11 s CERAMIC, CHIP 0.1uF 10% 25V
204)	C187	1-163-038-00 s CERAMIC, CHIP 0.1uF 25V
OLD)	C188	1-164-004-11 s CERAMIC, CHIP 0.1uF 10% 25V
204)	C188	1-163-038-00 s CERAMIC, CHIP 0.1uF 25V
OLD)	C189	1-164-004-11 s CERAMIC, CHIP 0.1uF 10% 25V
204)	C189	1-163-038-00 s CERAMIC, CHIP 0.1uF 25V
OLD)	C190	1-164-004-11 s CERAMIC, CHIP 0.1uF 10% 25V
204)	C190	1-163-038-00 s CERAMIC, CHIP 0.1uF 25V
OLD)	C191	1-164-004-11 s CERAMIC, CHIP 0.1uF 10% 25V
204)	C191	1-163-038-00 s CERAMIC, CHIP 0.1uF 25V
OLD)	C192	1-164-004-11 s CERAMIC, CHIP 0.1uF 10% 25V
204)	C192	1-163-038-00 s CERAMIC, CHIP 0.1uF 25V
OLD)	C193	1-164-004-11 s CERAMIC, CHIP 0.1uF 10% 25V
204)	C193	1-163-038-00 s CERAMIC, CHIP 0.1uF 25V
OLD)	C194	1-164-004-11 s CERAMIC, CHIP 0.1uF 10% 25V
204)	C194	1-163-038-00 s CERAMIC, CHIP 0.1uF 25V
OLD)	C195	1-164-004-11 s CERAMIC, CHIP 0.1uF 10% 25V
204)	C195	1-163-038-00 s CERAMIC, CHIP 0.1uF 25V
OLD)	C196	1-164-004-11 s CERAMIC, CHIP 0.1uF 10% 25V
204)	C196	1-163-038-00 s CERAMIC, CHIP 0.1uF 25V
OLD)	C197	1-164-004-11 s CERAMIC, CHIP 0.1uF 10% 25V
204)	C197	1-163-038-00 s CERAMIC, CHIP 0.1uF 25V
OLD)	C198	1-164-004-11 s CERAMIC, CHIP 0.1uF 10% 25V
204)	C198	1-163-038-00 s CERAMIC, CHIP 0.1uF 25V
OLD)	C199	1-164-004-11 s CERAMIC, CHIP 0.1uF 10% 25V
204)	C199	1-163-038-00 s CERAMIC, CHIP 0.1uF 25V
OLD)	C200	1-164-004-11 s CERAMIC, CHIP 0.1uF 10% 25V
204)	C200	1-163-038-00 s CERAMIC, CHIP 0.1uF 25V
OLD)	C201	1-164-004-11 s CERAMIC, CHIP 0.1uF 10% 25V
204)	C201	1-163-038-00 s CERAMIC, CHIP 0.1uF 25V
OLD)	C202	1-164-004-11 s CERAMIC, CHIP 0.1uF 10% 25V
204)	C202	1-163-038-00 s CERAMIC, CHIP 0.1uF 25V
OLD)	C203	1-164-004-11 s CERAMIC, CHIP 0.1uF 10% 25V
204)	C203	1-163-038-00 s CERAMIC, CHIP 0.1uF 25V
OLD)	C204	NOT IN USE.
110)	C204	1-164-004-11 s CERAMIC, CHIP 0.1uF 10% 25V
204)	C204	1-163-038-00 s CERAMIC, CHIP 0.1uF 25V
OLD)	C205	NOT IN USE.
110)	C205	1-164-004-11 s CERAMIC, CHIP 0.1uF 10% 25V
204)	C205	1-163-038-00 s CERAMIC, CHIP 0.1uF 25V
OLD)	C206	NOT IN USE.
110)	C206	1-164-004-11 s CERAMIC, CHIP 0.1uF 10% 25V
204)	C206	1-163-038-00 s CERAMIC, CHIP 0.1uF 25V
OLD)	D11	8-719-911-19 s DIODE 1SS119
110)	D11	8-719-800-76 s DIODE 1SS226
OLD)	D12	8-719-911-19 s DIODE 1SS119
110)	D12	8-719-800-76 s DIODE 1SS226
OLD)	D13	8-719-911-19 s DIODE 1SS119
110)	D13	8-719-800-76 s DIODE 1SS226
OLD)	D14	8-719-911-19 s DIODE 1SS119
110)	D14	8-719-800-76 s DIODE 1SS226

(DT-26 BOARD)

OLD)	D15	8-719-911-19 s DIODE 1SS119
110)	D15	8-719-800-76 s DIODE 1SS226
OLD)	D16	8-719-911-19 s DIODE 1SS119
110)	D16	8-719-800-76 s DIODE 1SS226
OLD)	D17	8-719-911-19 s DIODE 1SS119
110)	D17	8-719-800-76 s DIODE 1SS226
OLD)	D18	8-719-911-19 s DIODE 1SS119
110)	D18	8-719-800-76 s DIODE 1SS226
OLD)	D19	8-719-911-19 s DIODE 1SS119
110)	D19	8-719-800-76 s DIODE 1SS226
OLD)	D20	8-719-911-19 s DIODE 1SS119
110)	D20	8-719-800-76 s DIODE 1SS226
OLD)	D21	8-719-911-19 s DIODE 1SS119
110)	D21	8-719-800-76 s DIODE 1SS226
OLD)	D22	8-719-911-19 s DIODE 1SS119
110)	D22	8-719-800-76 s DIODE 1SS226
OLD)	D23	8-719-911-19 s DIODE 1SS119
110)	D23	8-719-800-76 s DIODE 1SS226
OLD)	D24	8-719-911-19 s DIODE 1SS119
110)	D24	8-719-800-76 s DIODE 1SS226
OLD)	D25	8-719-911-19 s DIODE 1SS119
110)	D25	8-719-800-76 s DIODE 1SS226
OLD)	D26	8-719-911-19 s DIODE 1SS119
110)	D26	8-719-800-76 s DIODE 1SS226
OLD)	D27	8-719-911-19 s DIODE 1SS119
110)	D27	8-719-800-76 s DIODE 1SS226
OLD)	D28	8-719-911-19 s DIODE 1SS119
110)	D28	8-719-800-76 s DIODE 1SS226
OLD)	D37	8-719-911-19 s DIODE 1SS119
110)	D37	8-719-800-76 s DIODE 1SS226
OLD)	D38	8-719-911-19 s DIODE 1SS119
110)	D38	8-719-800-76 s DIODE 1SS226
OLD)	ICR4	8-759-942-72 s IC MBM2212-20P
510)	ICR4	8-759-369-72 s IC 22S12I10
OLD)	ICS4	8-759-942-72 s IC MBM2212-20P
510)	ICS4	8-759-369-72 s IC 22S12I10
OLD)	ICU2	NOT IN USE.
110)	ICU2	8-759-908-92 s IC TL084CNS
OLD)	ICU3	NOT IN USE.
110)	ICU3	8-759-239-55 s IC TC74HC123AF
OLD)	ICU6	8-759-239-47 s IC TC74HC123AP
110)	ICU6	DELETED.
OLD)	ICU8	8-759-503-91 s IC TL082ACP
110)	ICU8	DELETED.
OLD)	R83	1-216-675-11 s METAL, CHIP 10k 0.5% 1/10W
204)	R83	1-216-073-00 s METAL, CHIP 10k 5% 1/10W
OLD)	R84	1-216-675-11 s METAL, CHIP 10k 0.5% 1/10W
204)	R84	1-216-073-00 s METAL, CHIP 10k 5% 1/10W
OLD)	R85	1-216-675-11 s METAL, CHIP 10k 0.5% 1/10W
204)	R85	1-216-073-00 s METAL, CHIP 10k 5% 1/10W
OLD)	R90	1-216-675-11 s METAL, CHIP 10k 0.5% 1/10W
204)	R90	1-216-073-00 s METAL, CHIP 10k 5% 1/10W
OLD)	R91	1-216-675-11 s METAL, CHIP 10k 0.5% 1/10W
204)	R91	1-216-073-00 s METAL, CHIP 10k 5% 1/10W

(DT-26 BOARD)

OLD)	R100	1-216-627-11 s METAL, CHIP 100 0.5% 1/10W
204)	R100	1-216-174-00 s METAL, CHIP 100 5% 1/8W
OLD)	R101	1-216-627-11 s METAL, CHIP 100 0.5% 1/10W
204)	R101	1-216-174-00 s METAL, CHIP 100 5% 1/8W
OLD)	R106	1-216-627-11 s METAL, CHIP 100 0.5% 1/10W
204)	R106	1-216-174-00 s METAL, CHIP 100 5% 1/8W
OLD)	R107	1-216-627-11 s METAL, CHIP 100 0.5% 1/10W
204)	R107	1-216-174-00 s METAL, CHIP 100 5% 1/8W
OLD)	R139	1-216-675-11 s METAL, CHIP 10k 0.5% 1/10W
204)	R139	1-216-073-00 s METAL, CHIP 10k 5% 1/10W
OLD)	R140	1-216-675-11 s METAL, CHIP 10k 0.5% 1/10W
204)	R140	1-216-073-00 s METAL, CHIP 10k 5% 1/10W
OLD)	R141	1-216-627-11 s METAL, CHIP 100 0.5% 1/10W
204)	R141	1-216-174-00 s METAL, CHIP 100 5% 1/8W
OLD)	R145	1-216-675-11 s METAL, CHIP 10k 0.5% 1/10W
204)	R145	1-216-073-00 s METAL, CHIP 10k 5% 1/10W
OLD)	R146	1-216-675-11 s METAL, CHIP 10k 0.5% 1/10W
204)	R146	1-216-073-00 s METAL, CHIP 10k 5% 1/10W
OLD)	R147	1-216-627-11 s METAL, CHIP 100 0.5% 1/10W
204)	R147	1-216-174-00 s METAL, CHIP 100 5% 1/8W
OLD)	R178	1-216-675-11 s METAL, CHIP 10k 0.5% 1/10W
204)	R178	1-216-073-00 s METAL, CHIP 10k 5% 1/10W
OLD)	R181	1-216-675-11 s METAL, CHIP 10k 0.5% 1/10W
204)	R181	1-216-073-00 s METAL, CHIP 10k 5% 1/10W
OLD)	R182	1-216-627-11 s METAL, CHIP 100 0.5% 1/10W
204)	R182	1-216-174-00 s METAL, CHIP 100 5% 1/8W
OLD)	R183	1-216-627-11 s METAL, CHIP 100 0.5% 1/10W
204)	R183	1-216-174-00 s METAL, CHIP 100 5% 1/8W
OLD)	R184	1-216-627-11 s METAL, CHIP 100 0.5% 1/10W
204)	R184	1-216-174-00 s METAL, CHIP 100 5% 1/8W
OLD)	R195	1-216-675-11 s METAL, CHIP 10k 0.5% 1/10W
204)	R195	1-216-073-00 s METAL, CHIP 10k 5% 1/10W
OLD)	R196	1-216-675-11 s METAL, CHIP 10k 0.5% 1/10W
204)	R196	1-216-073-00 s METAL, CHIP 10k 5% 1/10W
OLD)	R197	1-216-675-11 s METAL, CHIP 10k 0.5% 1/10W
204)	R197	1-216-073-00 s METAL, CHIP 10k 5% 1/10W
OLD)	R198	1-216-675-11 s METAL, CHIP 10k 0.5% 1/10W
204)	R198	1-216-073-00 s METAL, CHIP 10k 5% 1/10W
OLD)	R199	1-216-675-11 s METAL, CHIP 10k 0.5% 1/10W
204)	R199	1-216-073-00 s METAL, CHIP 10k 5% 1/10W
OLD)	R201	1-216-627-11 s METAL, CHIP 100 0.5% 1/10W
204)	R201	1-216-174-00 s METAL, CHIP 100 5% 1/8W
OLD)	R206	1-216-627-11 s METAL, CHIP 100 0.5% 1/10W
204)	R206	1-216-174-00 s METAL, CHIP 100 5% 1/8W
OLD)	R210	1-216-675-11 s METAL, CHIP 10k 0.5% 1/10W
204)	R210	1-216-073-00 s METAL, CHIP 10k 5% 1/10W
OLD)	R212	1-216-627-11 s METAL, CHIP 100 0.5% 1/10W
204)	R212	1-216-174-00 s METAL, CHIP 100 5% 1/8W
OLD)	R217	1-216-627-11 s METAL, CHIP 100 0.5% 1/10W
204)	R217	1-216-174-00 s METAL, CHIP 100 5% 1/8W
OLD)	R220	1-216-675-11 s METAL, CHIP 10k 0.5% 1/10W
204)	R220	1-216-073-00 s METAL, CHIP 10k 5% 1/10W
OLD)	R222	1-216-675-11 s METAL, CHIP 10k 0.5% 1/10W
204)	R222	1-216-073-00 s METAL, CHIP 10k 5% 1/10W

(DT-26 BOARD)

OLD)	R227	1-215-432-00 s METAL 3k 1% 1/6W
110)	R227	1-216-662-11 s METAL, CHIP 3k 0.5% 1/10W
OLD)	R228	1-215-447-00 s METAL 12k 1% 1/6W
110)	R228	1-216-677-11 s METAL, CHIP 12k 0.5% 1/10W
OLD)	R229	1-215-432-00 s METAL 3k 1% 1/6W
110)	R229	1-216-662-11 s METAL, CHIP 3k 0.5% 1/10W
OLD)	R230	1-215-447-00 s METAL 12k 1% 1/6W
110)	R230	1-216-677-11 s METAL, CHIP 12k 0.5% 1/10W
OLD)	R231	1-215-449-00 s METAL 15k 1% 1/6W
110)	R231	1-216-679-11 s METAL, CHIP 15k 0.5% 1/10W
OLD)	R232	1-215-445-00 s METAL 10k 1% 1/6W
110)	R232	1-216-675-11 s METAL, CHIP 10k 0.5% 1/10W
OLD)	R233	NOT IN USE.
110)	R233	1-216-675-11 s METAL, CHIP 10k 0.5% 1/10W
204)	R233	1-216-073-00 s METAL, CHIP 10k 5% 1/10W
OLD)	R234	NOT IN USE.
110)	R234	1-216-675-11 s METAL, CHIP 10k 0.5% 1/10W
204)	R234	1-216-073-00 s METAL, CHIP 10k 5% 1/10W
OLD)	R235	NOT IN USE.
110)	R235	1-216-675-11 s METAL, CHIP 10k 0.5% 1/10W
204)	R235	1-216-073-00 s METAL, CHIP 10k 5% 1/10W
OLD)	R236	NOT IN USE.
110)	R236	1-216-675-11 s METAL, CHIP 10k 0.5% 1/10W
204)	R236	1-216-073-00 s METAL, CHIP 10k 5% 1/10W
OLD)	R237	NOT IN USE.
110)	R237	1-216-675-11 s METAL, CHIP 10k 0.5% 1/10W
204)	R237	1-216-073-00 s METAL, CHIP 10k 5% 1/10W
OLD)	R238	NOT IN USE.
110)	R238	1-216-675-11 s METAL, CHIP 10k 0.5% 1/10W
204)	R238	1-216-073-00 s METAL, CHIP 10k 5% 1/10W
OLD)	R239	NOT IN USE.
110)	R239	1-216-675-11 s METAL, CHIP 10k 0.5% 1/10W
204)	R239	1-216-073-00 s METAL, CHIP 10k 5% 1/10W
OLD)	R240	NOT IN USE.
110)	R240	1-216-675-11 s METAL, CHIP 10k 0.5% 1/10W
204)	R240	1-216-073-00 s METAL, CHIP 10k 5% 1/10W
OLD)	R241	NOT IN USE.
110)	R241	1-216-675-11 s METAL, CHIP 10k 0.5% 1/10W
204)	R241	1-216-073-00 s METAL, CHIP 10k 5% 1/10W
OLD)	R242	NOT IN USE.
110)	R242	1-216-675-11 s METAL, CHIP 10k 0.5% 1/10W
204)	R242	1-216-073-00 s METAL, CHIP 10k 5% 1/10W
OLD)	R243	NOT IN USE.
110)	R243	1-216-675-11 s METAL, CHIP 10k 0.5% 1/10W
204)	R243	1-216-073-00 s METAL, CHIP 10k 5% 1/10W
OLD)	R244	NOT IN USE.
110)	R244	1-216-675-11 s METAL, CHIP 10k 0.5% 1/10W
204)	R244	1-216-073-00 s METAL, CHIP 10k 5% 1/10W
OLD)	R245	NOT IN USE.
110)	R245	1-216-675-11 s METAL, CHIP 10k 0.5% 1/10W
204)	R245	1-216-073-00 s METAL, CHIP 10k 5% 1/10W
OLD)	R246	NOT IN USE.
110)	R246	1-216-675-11 s METAL, CHIP 10k 0.5% 1/10W
204)	R246	1-216-073-00 s METAL, CHIP 10k 5% 1/10W

(DT-26 BOARD)

OLD)	R247	NOT IN USE.
110)	R247	1-216-675-11 s METAL, CHIP 10k 0.5% 1/10W
204)	R247	1-216-073-00 s METAL, CHIP 10k 5% 1/10W
OLD)	R248	NOT IN USE.
110)	R248	1-216-675-11 s METAL, CHIP 10k 0.5% 1/10W
204)	R248	1-216-073-00 s METAL, CHIP 10k 5% 1/10W
OLD)	R252	1-216-675-11 s METAL, CHIP 10k 0.5% 1/10W
204)	R252	1-216-073-00 s METAL, CHIP 10k 5% 1/10W
OLD)	RB11	1-231-410-00 s RESISTOR BLOCK 10kx8
110)	RB11	DELETED.
OLD)	RB12	1-231-410-00 s RESISTOR BLOCK 10kx8
110)	RB12	DELETED.

FP-33 BOARD

OLD)	1pc	1-639-136-11 o PRINTED CIRCUIT BOARD, FP-33
106)	1pc	1-639-136-12 o PRINTED CIRCUIT BOARD, FP-33

*The new board is upward compatible with the former one.
See section 22 for details.

FU-53 BOARD

OLD)	1pc	1-639-463-11 o PRINTED CIRCUIT BOARD, FU-53
105)	1pc	1-639-463-12 o PRINTED CIRCUIT BOARD, FU-53

*The new board is upward compatible with the former one.
See section 22 for details.

IF-276 BOARD

OLD)	1pc	A-6021-018-A o MOUNTED CIRCUIT BOARD, IF-276
203)	1pc	A-6021-018-B o MOUNTED CIRCUIT BOARD, IF-276

*The new board is upward compatible with the former one.
See section 22 for details.

OLD)	CNI22	NOT IN USE.
203)	CNI22	1-526-816-21 o SOCKET, IC (DP) 24P
OLD)	IC15	8-759-925-76 s IC SN74HC08ANS
203)	IC15	DELETED.
OLD)	IC18	8-759-925-85 s IC SN74HC32ANS
203)	IC18	DELETED.
OLD)	IC21	8-759-926-99 s IC SN74HC4075NS
203)	IC21	DELETED.
OLD)	IC22	NOT IN USE.
203)	IC22	8-759-087-72 o IC 22V10-IF276-01-01, PLD
OLD)	JP1	NOT IN USE.
203)	JP1	1-564-948-21 s PIN, CONNECTOR 3P
OLD)	JW1	1-564-948-21 o PIN, SHORTING
203)	JW1	DELETED.

(IF-276 BOARD)

OLD)	Q40	NOT IN USE.
106)	Q40	8-729-900-53 s TRANSISTOR DTC114EK
203)	Q40	DELETED.
OLD)	Q41	NOT IN USE.
106)	Q41	8-729-900-53 s TRANSISTOR DTC114EK
203)	Q41	DELETED.
OLD)	R30	1-216-022-00 s METAL, CHIP 75 5% 1/10W
203)	R30	1-216-073-00 s METAL, CHIP 10k 5% 1/10W
OLD)	R31	1-216-022-00 s METAL, CHIP 75 5% 1/10W
203)	R31	1-216-073-00 s METAL, CHIP 10k 5% 1/10W
OLD)	R32	1-247-804-11 s CARBON 75 5% 1/4W
106)	R32	DELETED.
OLD)	R33	1-247-804-11 s CARBON 75 5% 1/4W
106)	R33	DELETED.
OLD)	R35	NOT IN USE.
106)	R35	1-247-811-11 s CARBON 150 5% 1/4W
203)	R35	DELETED.
OLD)	R36	NOT IN USE.
106)	R36	1-247-811-11 s CARBON 150 5% 1/4W
203)	R36	DELETED.
OLD)	R37	NOT IN USE.
106)	R37	1-247-811-11 s CARBON 150 5% 1/4W
203)	R37	DELETED.
OLD)	R38	NOT IN USE.
106)	R38	1-247-811-11 s CARBON 150 5% 1/4W
203)	R38	DELETED.

LE-78 BOARD

OLD)	R9	1-215-406-00 s CARBON 240 1% 1/6W
110)	R9	1-247-816-11 s CARBON 240 5% 1/4W

MA-39 BOARD

OLD)	1pc	1-639-129-11 o PRINTED CIRCUIT BOARD, MA-39
203)	1pc	1-639-129-12 o PRINTED CIRCUIT BOARD, MA-39

*The new board is upward compatible with the former one.
See section 22 for details.

MA-50 BOARD

OLD)	1pc	1-641-164-11 o PRINTED CIRCUIT BOARD, MA-50
203)	1pc	1-641-164-12 o PRINTED CIRCUIT BOARD, MA-50

*The new board is upward compatible with the former one.
See section 22 for details.

MB-285 BOARD

OLD)	6pcs	3-683-631-01 o CLAMP
203)	6pcs	8pcs

MD-71 BOARD

OLD)	14pcs	7-621-759-75 s SCREW, +PSW 2.6x10
111)	14pcs	10pcs
OLD)	20pcs	7-621-759-65 s SCREW, +PSW 2.6x8
111)	20pcs	24pcs
OLD)	C3	1-124-659-11 s ELECT 47uF 20% 25V
605)	C3	1-126-786-11 s ELECT 47uF 20% 25V
OLD)	C9	1-126-176-11 s ELECT 220uF 20% 10V
605)	C9	1-126-923-11 s ELECT 220uF 20% 10V
OLD)	C11	1-126-176-11 s ELECT 220uF 20% 10V
605)	C11	1-126-923-11 s ELECT 220uF 20% 10V
OLD)	C15	1-124-659-11 s ELECT 47uF 20% 25V
605)	C15	1-126-786-11 s ELECT 47uF 20% 25V
OLD)	C26	1-126-176-11 s ELECT 220uF 20% 10V
605)	C26	1-126-923-11 s ELECT 220uF 20% 10V
OLD)	C27	1-126-176-11 s ELECT 220uF 20% 10V
605)	C27	1-126-923-11 s ELECT 220uF 20% 10V
OLD)	C28	1-126-176-11 s ELECT 220uF 20% 10V
605)	C28	1-126-923-11 s ELECT 220uF 20% 10V
OLD)	C29	1-126-176-11 s ELECT 220uF 20% 10V
605)	C29	1-126-923-11 s ELECT 220uF 20% 10V
OLD)	CR1	1-235-966-11 s ENCAPSULATED COMPONENTS, CR
306)	CR1	DELETED.
OLD)	CR2	1-235-966-11 s ENCAPSULATED COMPONENTS, CR
306)	CR2	DELETED.
OLD)	CR3	1-235-966-11 s ENCAPSULATED COMPONENTS, CR
306)	CR3	1-235-966-21 s ENCAPSULATED COMPONENTS, CR
OLD)	CR4	1-235-966-11 s ENCAPSULATED COMPONENTS, CR
306)	CR4	1-235-966-21 s ENCAPSULATED COMPONENTS, CR
OLD)	D5	8-719-900-95 s DIODE V09G
301)	D5	8-719-200-02 s DIODE 10E2
OLD)	D6	8-719-900-95 s DIODE V09G
301)	D6	8-719-200-02 s DIODE 10E2
OLD)	D7	8-719-900-95 s DIODE V09G
301)	D7	8-719-200-02 s DIODE 10E2
OLD)	D10	8-719-900-95 s DIODE V09G
301)	D10	8-719-200-02 s DIODE 10E2
OLD)	D11	8-719-900-95 s DIODE V09G
301)	D11	8-719-200-02 s DIODE 10E2
OLD)	D12	8-719-900-95 s DIODE V09G
301)	D12	8-719-200-02 s DIODE 10E2
OLD)	D19	8-719-900-95 s DIODE V09G
301)	D19	8-719-200-02 s DIODE 10E2
OLD)	D20	8-719-900-95 s DIODE V09G
301)	D20	8-719-200-02 s DIODE 10E2
OLD)	D21	8-719-900-95 s DIODE V09G
301)	D21	8-719-200-02 s DIODE 10E2

(MD-71 BOARD)

OLD)	IC18	8-741-128-10 s IC BX1281
303)	IC18	1-810-270-11 s IC BP-026
OLD)	IC19	8-741-128-10 s IC BX1281
303)	IC19	1-810-270-11 s IC BP-026
OLD)	L2	1-421-329-00 s COIL, CHOKE
111)	L2	1-460-086-11 s COIL, CHOKE 10uH
OLD)	L4	1-421-329-00 s COIL, CHOKE
111)	L4	1-460-086-11 s COIL, CHOKE 10uH
OLD)	L5	1-421-329-00 s COIL, CHOKE
111)	L5	1-460-086-11 s COIL, CHOKE 10uH
OLD)	L7	1-410-316-11 s INDUCTOR 1uH
308)	L7	1-414-142-11 s INDUCTOR 1uH
OLD)	L10	1-410-316-11 s INDUCTOR 1uH
308)	L10	1-414-142-11 s INDUCTOR 1uH
OLD)	L12	1-421-329-00 s COIL, CHOKE
111)	L12	1-460-086-11 s COIL, CHOKE 10uH
OLD)	L13	1-421-329-00 s COIL, CHOKE
111)	L13	1-460-086-11 s COIL, CHOKE 10uH
OLD)	L14	1-421-329-00 s COIL, CHOKE
111)	L14	1-460-086-11 s COIL, CHOKE 10uH
OLD)	L15	1-421-329-00 s COIL, CHOKE
111)	L15	1-460-086-11 s COIL, CHOKE 10uH
OLD)	L16	1-421-329-00 s COIL, CHOKE
111)	L16	1-460-086-11 s COIL, CHOKE 10uH
OLD)	L17	1-421-329-00 s COIL, CHOKE
111)	L17	1-460-086-11 s COIL, CHOKE 10uH
OLD)	Q21	8-729-199-82 s TRANSISTOR 2SD998
407)	Q21	8-729-112-68 s TRANSISTOR 2SD986D
OLD)	R293	NOT IN USE.
111)	R293	1-216-073-00 s METAL, CHIP 10k 5% 1/10W
OLD)	R294	NOT IN USE.
111)	R294	1-216-073-00 s METAL, CHIP 10k 5% 1/10W
OLD)	R295	NOT IN USE.
111)	R295	1-216-073-00 s METAL, CHIP 10k 5% 1/10W
OLD)	R296	NOT IN USE.
111)	R296	1-216-073-00 s METAL, CHIP 10k 5% 1/10W
OLD)	R297	NOT IN USE.
111)	R297	1-216-073-00 s METAL, CHIP 10k 5% 1/10W
OLD)	R298	NOT IN USE.
111)	R298	1-216-073-00 s METAL, CHIP 10k 5% 1/10W
OLD)	R299	NOT IN USE.
111)	R299	1-216-073-00 s METAL, CHIP 10k 5% 1/10W
OLD)	R300	NOT IN USE.
111)	R300	1-216-073-00 s METAL, CHIP 10k 5% 1/10W
OLD)	R301	NOT IN USE.
111)	R301	1-216-073-00 s METAL, CHIP 10k 5% 1/10W
OLD)	R302	NOT IN USE.
111)	R302	1-216-073-00 s METAL, CHIP 10k 5% 1/10W
OLD)	R303	NOT IN USE.
111)	R303	1-216-073-00 s METAL, CHIP 10k 5% 1/10W
OLD)	R304	NOT IN USE.
111)	R304	1-216-073-00 s METAL, CHIP 10k 5% 1/10
OLD)	R305	NOT IN USE.
111)	R305	1-216-073-00 s METAL, CHIP 10k 5% 1/10W

(MD-71 BOARD)

OLD)	R306	NOT IN USE.
111)	R306	1-216-073-00 s METAL, CHIP 10k 5% 1/10W
OLD)	R307	NOT IN USE.
111)	R307	1-216-073-00 s METAL, CHIP 10k 5% 1/10W
OLD)	R308	NOT IN USE.
111)	R308	1-216-073-00 s METAL, CHIP 10k 5% 1/10W

MOA-05 BOARD

OLD)	1pc	A-6019-046-B o MOUNTED CIRCUIT BOARD, MOA-05
203)	1pc	A-6019-046-C o MOUNTED CIRCUIT BOARD, MOA-05

*The new board is upward compatible with the former one.
See section 22 for details.

OLD)	6pcs	1-526-653-21 s SOCKET, IC (DP) 14P
110)	6pcs	DELETED.
OLD)	2pcs	1-526-656-00 s SOCKET, IC (DP) 20P
210)	2pcs	DELETED.
OLD)	3pcs	NOT IN USE.
110)	3pcs	1-540-187-21 o SOCKET, IC (DP) 28P
OLD)	12pcs	1-540-187-21 o SOCKET, IC (DP) 28P
210)	12pcs	DELETED.
OLD)	C1	1-164-004-11 s CERAMIC, CHIP 0.1uF 10% 25V
204)	C1	1-163-038-00 s CERAMIC, CHIP 0.1uF 25V
OLD)	C2	1-164-004-11 s CERAMIC, CHIP 0.1uF 10% 25V
204)	C2	1-163-038-00 s CERAMIC, CHIP 0.1uF 25V
OLD)	C17	1-124-006-11 s ELECT NONPOLAR 10uF 20% 50V
605)	C17	1-107-698-11 s ELECT NONPOLAR 10uF 20% 50V
OLD)	C18	1-124-006-11 s ELECT NONPOLAR 10uF 20% 50V
605)	C18	1-107-698-11 s ELECT NONPOLAR 10uF 20% 50V
OLD)	C19	1-126-233-11 s ELECT 22uF 20% 50V
605)	C19	1-107-930-11 s ELECT 22uF 20% 50V
OLD)	C20	1-126-233-11 s ELECT 22uF 20% 50V
605)	C20	1-107-930-11 s ELECT 22uF 20% 50V
OLD)	C22	1-126-233-11 s ELECT 22uF 20% 50V
605)	C22	1-107-930-11 s ELECT 22uF 20% 50V
OLD)	C32	1-126-803-11 s ELECT 47uF 20% 25V
605)	C32	1-104-664-11 s ELECT 47uF 20% 25V
OLD)	C33	1-126-803-11 s ELECT 47uF 20% 25V
605)	C33	1-104-664-11 s ELECT 47uF 20% 25V
OLD)	C34	1-126-336-11 s ELECT 220uF 20% 25V
605)	C34	1-107-889-11 s ELECT 220uF 20% 25V
OLD)	C35	1-164-004-11 s CERAMIC, CHIP 0.1uF 10% 25V
204)	C35	1-163-038-00 s CERAMIC, CHIP 0.1uF 25V
OLD)	C36	1-126-336-11 s ELECT 220uF 20% 25V
605)	C36	1-107-889-11 s ELECT 220uF 20% 25V
OLD)	C37	1-164-004-11 s CERAMIC, CHIP 0.1uF 10% 25V
204)	C37	1-163-038-00 s CERAMIC, CHIP 0.1uF 25V
OLD)	C38	1-164-004-11 s CERAMIC, CHIP 0.1uF 10% 25V
204)	C38	1-163-038-00 s CERAMIC, CHIP 0.1uF 25V
OLD)	C39	1-126-541-11 s ELECT 330uF 20% 25V
605)	C39	1-107-883-11 s ELECT 330uF 20% 25V
OLD)	C40	1-164-004-11 s CERAMIC, CHIP 0.1uF 10% 25V
204)	C40	1-163-038-00 s CERAMIC, CHIP 0.1uF 25V

(MOA-05 BOARD)

OLD)	C41	1-126-541-11 s ELECT 330uF 20% 25V
605)	C41	1-107-883-11 s ELECT 330uF 20% 25V
OLD)	C42	1-164-004-11 s CERAMIC, CHIP 0.1uF 10% 25V
204)	C42	1-163-038-00 s CERAMIC, CHIP 0.1uF 25V
OLD)	C43	1-126-541-11 s ELECT 330uF 20% 25V
605)	C43	1-107-883-11 s ELECT 330uF 20% 25V
OLD)	C44	1-164-004-11 s CERAMIC, CHIP 0.1uF 10% 25V
204)	C44	1-163-038-00 s CERAMIC, CHIP 0.1uF 25V
OLD)	C45	1-126-541-11 s ELECT 330uF 20% 25V
605)	C45	1-107-883-11 s ELECT 330uF 20% 25V
OLD)	C46	1-164-004-11 s CERAMIC, CHIP 0.1uF 10% 25V
204)	C46	1-163-038-00 s CERAMIC, CHIP 0.1uF 25V
OLD)	C48	1-126-803-11 s ELECT 47uF 20% 25V
605)	C48	1-104-664-11 s ELECT 47uF 20% 25V
OLD)	C49	1-126-803-11 s ELECT 47uF 20% 25V
605)	C49	1-104-664-11 s ELECT 47uF 20% 25V
OLD)	C50	1-126-803-11 s ELECT 47uF 20% 25V
605)	C50	1-104-664-11 s ELECT 47uF 20% 25V
OLD)	C51	1-126-803-11 s ELECT 47uF 20% 25V
605)	C51	1-104-664-11 s ELECT 47uF 20% 25V
OLD)	C59	1-124-767-00 s ELECT NONPOLAR 2.2uF 20% 50V
605)	C59	1-109-953-11 s ELECT NONPOLAR 2.2uF 20% 50V
OLD)	C60	1-124-767-00 s ELECT NONPOLAR 2.2uF 20% 50V
605)	C60	1-109-953-11 s ELECT NONPOLAR 2.2uF 20% 50V
OLD)	C76	1-126-802-11 s ELECT 10uF 20% 50V
203)	C76	1-124-667-11 s ELECT 10uF 20% 100V
OLD)	C77	1-126-802-11 s ELECT 10uF 20% 50V
203)	C77	1-124-667-11 s ELECT 10uF 20% 100V
OLD)	C78	1-126-803-11 s ELECT 47uF 20% 25V
605)	C78	1-104-664-11 s ELECT 47uF 20% 25V
OLD)	C79	1-164-004-11 s CERAMIC, CHIP 0.1uF 10% 25V
204)	C79	1-163-038-00 s CERAMIC, CHIP 0.1uF 25V
OLD)	C80	1-126-802-11 s ELECT 10uF 20% 50V
203)	C80	1-124-667-11 s ELECT 10uF 20% 100V
OLD)	C81	1-126-336-11 s ELECT 220uF 20% 25V
605)	C81	1-107-889-11 s ELECT 220uF 20% 25V
OLD)	C82	1-126-336-11 s ELECT 220uF 20% 25V
605)	C82	1-107-889-11 s ELECT 220uF 20% 25V
OLD)	BC83	1-126-336-11 s ELECT 220uF 20% 25V
605)	C83	1-107-889-11 s ELECT 220uF 20% 25V
OLD)	C84	1-126-336-11 s ELECT 220uF 20% 25V
605)	C84	1-107-889-11 s ELECT 220uF 20% 25V
OLD)	C95	1-126-803-11 s ELECT 47uF 20% 25V
605)	C95	1-104-664-11 s ELECT 47uF 20% 25V
OLD)	C96	1-126-803-11 s ELECT 47uF 20% 25V
605)	C96	1-104-664-11 s ELECT 47uF 20% 25V
OLD)	C116	1-126-803-11 s ELECT 47uF 20% 25V
605)	C116	1-104-664-11 s ELECT 47uF 20% 25V
OLD)	C117	1-126-803-11 s ELECT 47uF 20% 25V
605)	C117	1-104-664-11 s ELECT 47uF 20% 25V
OLD)	C129	1-126-803-11 s ELECT 47uF 20% 25V
605)	C129	1-104-664-11 s ELECT 47uF 20% 25V
OLD)	C130	1-126-803-11 s ELECT 47uF 20% 25V
605)	C130	1-104-664-11 s ELECT 47uF 20% 25V

(MOA-05 BOARD)

OLD)	C141	1-126-803-11 s ELECT 47uF 20% 25V
605)	C141	1-104-664-11 s ELECT 47uF 20% 25V
OLD)	C142	1-126-803-11 s ELECT 47uF 20% 25V
605)	C142	1-104-664-11 s ELECT 47uF 20% 25V
OLD)	C145	1-126-802-11 s ELECT 10uF 20% 50V
203)	C145	1-124-667-11 s ELECT 10uF 20% 100V
OLD)	C147	1-126-336-11 s ELECT 220uF 20% 25V
605)	C147	1-107-889-11 s ELECT 220uF 20% 25V
OLD)	C148	1-126-336-11 s ELECT 220uF 20% 25V
605)	C148	1-107-889-11 s ELECT 220uF 20% 25V
OLD)	C149	1-126-336-11 s ELECT 220uF 20% 25V
605)	C149	1-107-889-11 s ELECT 220uF 20% 25V
OLD)	C150	1-126-336-11 s ELECT 220uF 20% 25V
605)	C150	1-107-889-11 s ELECT 220uF 20% 25V
OLD)	C151	1-126-336-11 s ELECT 220uF 20% 25V
605)	C151	1-107-889-11 s ELECT 220uF 20% 25V
OLD)	C152	1-126-336-11 s ELECT 220uF 20% 25V
605)	C152	1-107-889-11 s ELECT 220uF 20% 25V
OLD)	C153	1-126-336-11 s ELECT 220uF 20% 25V
605)	C153	1-107-889-11 s ELECT 220uF 20% 25V
OLD)	C154	1-126-336-11 s ELECT 220uF 20% 25V
605)	C154	1-107-889-11 s ELECT 220uF 20% 25V
OLD)	C157	1-126-541-11 s ELECT 330uF 20% 25V
605)	C157	1-107-883-11 s ELECT 330uF 20% 25V
OLD)	C201	1-126-803-11 s ELECT 47uF 20% 25V
605)	C201	1-104-664-11 s ELECT 47uF 20% 25V
OLD)	C202	1-126-803-11 s ELECT 47uF 20% 25V
605)	C202	1-104-664-11 s ELECT 47uF 20% 25V
OLD)	C207	1-164-004-11 s CERAMIC, CHIP 0.1uF 10% 25V
204)	C207	1-163-038-00 s CERAMIC, CHIP 0.1uF 25V
OLD)	C208	1-164-004-11 s CERAMIC, CHIP 0.1uF 10% 25V
204)	C208	1-163-038-00 s CERAMIC, CHIP 0.1uF 25V
OLD)	C209	1-164-004-11 s CERAMIC, CHIP 0.1uF 10% 25V
204)	C209	1-163-038-00 s CERAMIC, CHIP 0.1uF 25V
OLD)	C210	1-164-004-11 s CERAMIC, CHIP 0.1uF 10% 25V
204)	C210	1-163-038-00 s CERAMIC, CHIP 0.1uF 25V
OLD)	C211	1-164-004-11 s CERAMIC, CHIP 0.1uF 10% 25V
204)	C211	1-163-038-00 s CERAMIC, CHIP 0.1uF 25V
OLD)	C213	1-126-803-11 s ELECT 47uF 20% 25V
605)	C213	1-104-664-11 s ELECT 47uF 20% 25V
OLD)	C214	1-126-803-11 s ELECT 47uF 20% 25V
605)	C214	1-104-664-11 s ELECT 47uF 20% 25V
OLD)	C215	1-164-004-11 s CERAMIC, CHIP 0.1uF 10% 25V
204)	C215	1-163-038-00 s CERAMIC, CHIP 0.1uF 25V
OLD)	C216	1-164-004-11 s CERAMIC, CHIP 0.1uF 10% 25V
204)	C216	1-163-038-00 s CERAMIC, CHIP 0.1uF 25V
OLD)	C217	1-164-004-11 s CERAMIC, CHIP 0.1uF 10% 25V
204)	C217	1-163-038-00 s CERAMIC, CHIP 0.1uF 25V
OLD)	C218	1-164-004-11 s CERAMIC, CHIP 0.1uF 10% 25V
204)	C218	1-163-038-00 s CERAMIC, CHIP 0.1uF 25V
OLD)	C219	1-164-004-11 s CERAMIC, CHIP 0.1uF 10% 25V
204)	C219	1-163-038-00 s CERAMIC, CHIP 0.1uF 25V
OLD)	C220	1-164-004-11 s CERAMIC, CHIP 0.1uF 10% 25V
204)	C220	1-163-038-00 s CERAMIC, CHIP 0.1uF 25V

(MOA-05 BOARD)

[[B

OLD)	C221	1-164-004-11 s CERAMIC, CHIP 0.1uF 10% 25V
204)	C221	1-163-038-00 s CERAMIC, CHIP 0.1uF 25V
OLD)	C224	1-126-803-11 s ELECT 47uF 20% 25V
605)	C224	1-104-664-11 s ELECT 47uF 20% 25V
OLD)	C225	1-126-803-11 s ELECT 47uF 20% 25V
605)	C225	1-104-664-11 s ELECT 47uF 20% 25V
OLD)	C226	1-126-803-11 s ELECT 47uF 20% 25V
605)	C226	1-104-664-11 s ELECT 47uF 20% 25V
OLD)	C227	1-126-803-11 s ELECT 47uF 20% 25V
605)	C227	1-104-664-11 s ELECT 47uF 20% 25V
OLD)	C230	1-126-803-11 s ELECT 47uF 20% 25V
605)	C230	1-104-664-11 s ELECT 47uF 20% 25V
OLD)	C231	1-126-803-11 s ELECT 47uF 20% 25V
605)	C231	1-104-664-11 s ELECT 47uF 20% 25V
OLD)	C232	1-164-004-11 s CERAMIC, CHIP 0.1uF 10% 25V
204)	C232	1-163-038-00 s CERAMIC, CHIP 0.1uF 25V
OLD)	C233	1-164-004-11 s CERAMIC, CHIP 0.1uF 10% 25V
204)	C233	1-163-038-00 s CERAMIC, CHIP 0.1uF 25V
OLD)	C234	1-164-004-11 s CERAMIC, CHIP 0.1uF 10% 25V
204)	C234	1-163-038-00 s CERAMIC, CHIP 0.1uF 25V
OLD)	C235	1-164-004-11 s CERAMIC, CHIP 0.1uF 10% 25V
204)	C235	1-163-038-00 s CERAMIC, CHIP 0.1uF 25V
OLD)	C236	1-164-004-11 s CERAMIC, CHIP 0.1uF 10% 25V
204)	C236	1-163-038-00 s CERAMIC, CHIP 0.1uF 25V
OLD)	C241	1-126-803-11 s ELECT 47uF 20% 25V
605)	C241	1-104-664-11 s ELECT 47uF 20% 25V
OLD)	C242	1-126-803-11 s ELECT 47uF 20% 25V
605)	C242	1-104-664-11 s ELECT 47uF 20% 25V
OLD)	C243	1-126-803-11 s ELECT 47uF 20% 25V
605)	C243	1-104-664-11 s ELECT 47uF 20% 25V
OLD)	C244	1-126-803-11 s ELECT 47uF 20% 25V
605)	C244	1-104-664-11 s ELECT 47uF 20% 25V
OLD)	C254	1-126-803-11 s ELECT 47uF 20% 25V
605)	C254	1-104-664-11 s ELECT 47uF 20% 25V
OLD)	C256	1-126-233-11 s ELECT 22uF 20% 50V
605)	C256	1-107-930-11 s ELECT 22uF 20% 50V
OLD)	C257	1-126-233-11 s ELECT 22uF 20% 50V
605)	C257	1-107-930-11 s ELECT 22uF 20% 50V
OLD)	C258	1-126-803-11 s ELECT 47uF 20% 25V
605)	C258	1-104-664-11 s ELECT 47uF 20% 25V
OLD)	C259	1-126-803-11 s ELECT 47uF 20% 25V
605)	C259	1-104-664-11 s ELECT 47uF 20% 25V
OLD)	C262	1-126-803-11 s ELECT 47uF 20% 25V
605)	C262	1-104-664-11 s ELECT 47uF 20% 25V
OLD)	C263	1-126-803-11 s ELECT 47uF 20% 25V
605)	C263	1-104-664-11 s ELECT 47uF 20% 25V
OLD)	C264	1-126-803-11 s ELECT 47uF 20% 25V
605)	C264	1-104-664-11 s ELECT 47uF 20% 25V
OLD)	C265	1-126-803-11 s ELECT 47uF 20% 25V
605)	C265	1-104-664-11 s ELECT 47uF 20% 25V
OLD)	C266	1-126-803-11 s ELECT 47uF 20% 25V
605)	C266	1-104-664-11 s ELECT 47uF 20% 25V
OLD)	C267	1-126-803-11 s ELECT 47uF 20% 25V
605)	C267	1-104-664-11 s ELECT 47uF 20% 25V

OLD)	C275	1-164-004-11 s CERAMIC, CHIP 0.1uF 10% 25V
204)	C275	1-163-038-00 s CERAMIC, CHIP 0.1uF 25V
OLD)	C276	1-126-803-11 s ELECT 47uF 20% 25V
605)	C276	1-104-664-11 s ELECT 47uF 20% 25V
OLD)	C277	1-126-803-11 s ELECT 47uF 20% 25V
605)	C277	1-104-664-11 s ELECT 47uF 20% 25V
OLD)	C278	1-164-004-11 s CERAMIC, CHIP 0.1uF 10% 25V
204)	C278	1-163-038-00 s CERAMIC, CHIP 0.1uF 25V
OLD)	C279	1-164-004-11 s CERAMIC, CHIP 0.1uF 10% 25V
204)	C279	1-163-038-00 s CERAMIC, CHIP 0.1uF 25V
OLD)	C280	1-164-004-11 s CERAMIC, CHIP 0.1uF 10% 25V
204)	C280	1-163-038-00 s CERAMIC, CHIP 0.1uF 25V
OLD)	C283	1-164-004-11 s CERAMIC, CHIP 0.1uF 10% 25V
204)	C283	1-163-038-00 s CERAMIC, CHIP 0.1uF 25V
OLD)	C284	1-164-004-11 s CERAMIC, CHIP 0.1uF 10% 25V
204)	C284	1-163-038-00 s CERAMIC, CHIP 0.1uF 25V
OLD)	C289	1-164-004-11 s CERAMIC, CHIP 0.1uF 10% 25V
204)	C289	1-163-038-00 s CERAMIC, CHIP 0.1uF 25V
OLD)	C292	1-164-004-11 s CERAMIC, CHIP 0.1uF 10% 25V
204)	C292	1-163-038-00 s CERAMIC, CHIP 0.1uF 25V
OLD)	C293	1-164-004-11 s CERAMIC, CHIP 0.1uF 10% 25V
204)	C293	1-163-038-00 s CERAMIC, CHIP 0.1uF 25V
OLD)	C294	1-164-004-11 s CERAMIC, CHIP 0.1uF 10% 25V
204)	C294	1-163-038-00 s CERAMIC, CHIP 0.1uF 25V
OLD)	C295	1-126-803-11 s ELECT 47uF 20% 25V
605)	C295	1-104-664-11 s ELECT 47uF 20% 25V
OLD)	C296	1-126-803-11 s ELECT 47uF 20% 25V
605)	C296	1-104-664-11 s ELECT 47uF 20% 25V
OLD)	C297	1-126-803-11 s ELECT 47uF 20% 25V
605)	C297	1-104-664-11 s ELECT 47uF 20% 25V
OLD)	C298	1-126-803-11 s ELECT 47uF 20% 25V
605)	C298	1-104-664-11 s ELECT 47uF 20% 25V
OLD)	C299	1-126-803-11 s ELECT 47uF 20% 25V
605)	C299	1-104-664-11 s ELECT 47uF 20% 25V
OLD)	C300	1-126-803-11 s ELECT 47uF 20% 25V
605)	C300	1-104-664-11 s ELECT 47uF 20% 25V
OLD)	C301	NOT IN USE.
110)	C301	1-164-004-11 s CERAMIC, CHIP 0.1uF 10% 25V
204)	C301	1-163-038-00 s CERAMIC, CHIP 0.1uF 25V
OLD)	C303	1-164-004-11 s CERAMIC, CHIP 0.1uF 10% 25V
204)	C303	1-163-038-00 s CERAMIC, CHIP 0.1uF 25V
OLD)	C304	1-164-004-11 s CERAMIC, CHIP 0.1uF 10% 25V
204)	C304	1-163-038-00 s CERAMIC, CHIP 0.1uF 25V
OLD)	C305	1-164-004-11 s CERAMIC, CHIP 0.1uF 10% 25V
204)	C305	1-163-038-00 s CERAMIC, CHIP 0.1uF 25V
OLD)	C306	1-164-004-11 s CERAMIC, CHIP 0.1uF 10% 25V
204)	C306	1-163-038-00 s CERAMIC, CHIP 0.1uF 25V
OLD)	C307	1-164-004-11 s CERAMIC, CHIP 0.1uF 10% 25V
204)	C307	1-163-038-00 s CERAMIC, CHIP 0.1uF 25V
OLD)	C308	1-164-004-11 s CERAMIC, CHIP 0.1uF 10% 25V
204)	C308	1-163-038-00 s CERAMIC, CHIP 0.1uF 25V
OLD)	C309	1-164-004-11 s CERAMIC, CHIP 0.1uF 10% 25V
204)	C309	1-163-038-00 s CERAMIC, CHIP 0.1uF 25V
OLD)	C310	1-164-004-11 s CERAMIC, CHIP 0.1uF 10% 25V
204)	C310	1-163-038-00 s CERAMIC, CHIP 0.1uF 25V

(MOA-05 BOARD)

OLD)	C311	1-164-004-11 s CERAMIC, CHIP 0.1uF 10% 25V
204)	C311	1-163-038-00 s CERAMIC, CHIP 0.1uF 25V
OLD)	C312	1-164-004-11 s CERAMIC, CHIP 0.1uF 10% 25V
204)	C312	1-163-038-00 s CERAMIC, CHIP 0.1uF 25V
OLD)	C313	1-164-004-11 s CERAMIC, CHIP 0.1uF 10% 25V
204)	C313	1-163-038-00 s CERAMIC, CHIP 0.1uF 25V
OLD)	C314	1-164-004-11 s CERAMIC, CHIP 0.1uF 10% 25V
204)	C314	1-163-038-00 s CERAMIC, CHIP 0.1uF 25V
OLD)	C315	1-164-004-11 s CERAMIC, CHIP 0.1uF 10% 25V
110)	C315	DELETED.
OLD)	C316	1-164-004-11 s CERAMIC, CHIP 0.1uF 10% 25V
110)	C316	DELETED.
OLD)	C317	1-164-004-11 s CERAMIC, CHIP 0.1uF 10% 25V
110)	C317	DELETED.
OLD)	C318	1-164-004-11 s CERAMIC, CHIP 0.1uF 10% 25V
110)	C318	DELETED.
OLD)	C319	1-164-004-11 s CERAMIC, CHIP 0.1uF 10% 25V
204)	C319	1-163-038-00 s CERAMIC, CHIP 0.1uF 25V
OLD)	C320	1-164-004-11 s CERAMIC, CHIP 0.1uF 10% 25V
204)	C320	1-163-038-00 s CERAMIC, CHIP 0.1uF 25V
OLD)	C321	1-164-004-11 s CERAMIC, CHIP 0.1uF 10% 25V
110)	C321	DELETED.
OLD)	C322	1-164-004-11 s CERAMIC, CHIP 0.1uF 10% 25V
110)	C322	DELETED.
OLD)	C323	1-164-004-11 s CERAMIC, CHIP 0.1uF 10% 25V
110)	C323	DELETED.
OLD)	C324	1-164-004-11 s CERAMIC, CHIP 0.1uF 10% 25V
110)	C324	DELETED.
OLD)	C325	1-164-004-11 s CERAMIC, CHIP 0.1uF 10% 25V
204)	C325	1-163-038-00 s CERAMIC, CHIP 0.1uF 25V
OLD)	C341	1-164-004-11 s CERAMIC, CHIP 0.1uF 10% 25V
204)	C341	1-163-038-00 s CERAMIC, CHIP 0.1uF 25V
OLD)	C342	1-164-004-11 s CERAMIC, CHIP 0.1uF 10% 25V
204)	C342	1-163-038-00 s CERAMIC, CHIP 0.1uF 25V
OLD)	C343	1-164-004-11 s CERAMIC, CHIP 0.1uF 10% 25V
204)	C343	DELETED.
OLD)	C344	1-164-004-11 s CERAMIC, CHIP 0.1uF 10% 25V
204)	C344	1-163-038-00 s CERAMIC, CHIP 0.1uF 25V
OLD)	C345	1-164-004-11 s CERAMIC, CHIP 0.1uF 10% 25V
204)	C345	DELETED.
OLD)	C348	1-164-004-11 s CERAMIC, CHIP 0.1uF 10% 25V
204)	C348	DELETED.
OLD)	C349	1-164-004-11 s CERAMIC, CHIP 0.1uF 10% 25V
204)	C349	1-163-038-00 s CERAMIC, CHIP 0.1uF 25V
OLD)	C350	1-164-004-11 s CERAMIC, CHIP 0.1uF 10% 25V
204)	C350	DELETED.
OLD)	C351	1-164-004-11 s CERAMIC, CHIP 0.1uF 10% 25V
204)	C351	1-163-038-00 s CERAMIC, CHIP 0.1uF 25V
OLD)	C352	1-164-004-11 s CERAMIC, CHIP 0.1uF 10% 25V
204)	C352	1-163-038-00 s CERAMIC, CHIP 0.1uF 25V
OLD)	C356	1-164-004-11 s CERAMIC, CHIP 0.1uF 10% 25V
204)	C356	1-163-038-00 s CERAMIC, CHIP 0.1uF 25V
OLD)	C357	1-164-004-11 s CERAMIC, CHIP 0.1uF 10% 25V
204)	C357	DELETED.

OLD)	C358	1-164-004-11 s CERAMIC, CHIP 0.1uF 10% 25V
110)	C358	DELETED.
OLD)	C359	1-164-004-11 s CERAMIC, CHIP 0.1uF 10% 25V
204)	C359	DELETED.
OLD)	C360	1-164-004-11 s CERAMIC, CHIP 0.1uF 10% 25V
204)	C360	1-163-038-00 s CERAMIC, CHIP 0.1uF 25V
OLD)	C361	1-164-004-11 s CERAMIC, CHIP 0.1uF 10% 25V
204)	C361	1-163-038-00 s CERAMIC, CHIP 0.1uF 25V
OLD)	C363	1-164-004-11 s CERAMIC, CHIP 0.1uF 10% 25V
204)	C363	1-163-038-00 s CERAMIC, CHIP 0.1uF 25V
OLD)	C364	1-164-004-11 s CERAMIC, CHIP 0.1uF 10% 25V
204)	C364	1-163-038-00 s CERAMIC, CHIP 0.1uF 25V
OLD)	C365	1-164-004-11 s CERAMIC, CHIP 0.1uF 10% 25V
204)	C365	1-163-038-00 s CERAMIC, CHIP 0.1uF 25V
OLD)	C367	1-164-004-11 s CERAMIC, CHIP 0.1uF 10% 25V
204)	C367	DELETED.
OLD)	C369	1-164-004-11 s CERAMIC, CHIP 0.1uF 10% 25V
204)	C369	DELETED.
OLD)	C370	1-164-004-11 s CERAMIC, CHIP 0.1uF 10% 25V
204)	C370	1-163-038-00 s CERAMIC, CHIP 0.1uF 25V
OLD)	C372	1-164-004-11 s CERAMIC, CHIP 0.1uF 10% 25V
204)	C372	DELETED.
OLD)	C373	1-164-004-11 s CERAMIC, CHIP 0.1uF 10% 25V
204)	C373	1-163-038-00 s CERAMIC, CHIP 0.1uF 25V
OLD)	C374	1-164-004-11 s CERAMIC, CHIP 0.1uF 10% 25V
110)	C374	DELETED.
OLD)	C375	1-164-004-11 s CERAMIC, CHIP 0.1uF 10% 25V
110)	C375	DELETED.
OLD)	C376	1-164-004-11 s CERAMIC, CHIP 0.1uF 10% 25V
204)	C376	1-163-038-00 s CERAMIC, CHIP 0.1uF 25V
OLD)	C377	1-164-004-11 s CERAMIC, CHIP 0.1uF 10% 25V
204)	C377	DELETED.
OLD)	C378	1-164-004-11 s CERAMIC, CHIP 0.1uF 10% 25V
204)	C378	1-163-038-00 s CERAMIC, CHIP 0.1uF 25V
OLD)	C379	1-164-004-11 s CERAMIC, CHIP 0.1uF 10% 25V
204)	C379	DELETED.
OLD)	C380	1-164-004-11 s CERAMIC, CHIP 0.1uF 10% 25V
204)	C380	1-163-038-00 s CERAMIC, CHIP 0.1uF 25V
OLD)	C381	1-164-004-11 s CERAMIC, CHIP 0.1uF 10% 25V
204)	C381	DELETED.
OLD)	C382	1-164-004-11 s CERAMIC, CHIP 0.1uF 10% 25V
204)	C382	1-163-038-00 s CERAMIC, CHIP 0.1uF 25V
OLD)	C383	1-164-004-11 s CERAMIC, CHIP 0.1uF 10% 25V
204)	C383	1-163-038-00 s CERAMIC, CHIP 0.1uF 25V
OLD)	C384	1-164-004-11 s CERAMIC, CHIP 0.1uF 10% 25V
110)	C384	DELETED.
OLD)	C385	1-164-004-11 s CERAMIC, CHIP 0.1uF 10% 25V
204)	C385	1-163-038-00 s CERAMIC, CHIP 0.1uF 25V
OLD)	C386	1-164-004-11 s CERAMIC, CHIP 0.1uF 10% 25V
204)	C386	DELETED.
OLD)	C387	1-164-004-11 s CERAMIC, CHIP 0.1uF 10% 25V
204)	C387	1-163-038-00 s CERAMIC, CHIP 0.1uF 25V
OLD)	C388	1-164-004-11 s CERAMIC, CHIP 0.1uF 10% 25V
204)	C388	1-163-038-00 s CERAMIC, CHIP 0.1uF 25V

(MOA-05 BOARD)

OLD)	C389	1-164-004-11 s CERAMIC, CHIP 0.1uF 10% 25V
204)	C389	1-163-038-00 s CERAMIC, CHIP 0.1uF 25V
OLD)	C390	1-164-004-11 s CERAMIC, CHIP 0.1uF 10% 25V
204)	C390	DELETED.
OLD)	C391	1-164-004-11 s CERAMIC, CHIP 0.1uF 10% 25V
204)	C391	1-163-038-00 s CERAMIC, CHIP 0.1uF 25V
OLD)	C394	1-164-004-11 s CERAMIC, CHIP 0.1uF 10% 25V
204)	C394	DELETED.
OLD)	C395	1-164-004-11 s CERAMIC, CHIP 0.1uF 10% 25V
204)	C395	1-163-038-00 s CERAMIC, CHIP 0.1uF 25V
OLD)	C396	1-164-004-11 s CERAMIC, CHIP 0.1uF 10% 25V
204)	C396	DELETED.
OLD)	C397	1-164-004-11 s CERAMIC, CHIP 0.1uF 10% 25V
204)	C397	1-163-038-00 s CERAMIC, CHIP 0.1uF 25V
OLD)	C398	1-164-004-11 s CERAMIC, CHIP 0.1uF 10% 25V
204)	C398	DELETED.
OLD)	C399	1-164-004-11 s CERAMIC, CHIP 0.1uF 10% 25V
204)	C399	1-163-038-00 s CERAMIC, CHIP 0.1uF 25V
OLD)	C400	1-164-004-11 s CERAMIC, CHIP 0.1uF 10% 25V
204)	C400	DELETED.
OLD)	C401	1-164-004-11 s CERAMIC, CHIP 0.1uF 10% 25V
204)	C401	1-163-038-00 s CERAMIC, CHIP 0.1uF 25V
OLD)	C402	1-164-004-11 s CERAMIC, CHIP 0.1uF 10% 25V
204)	C402	DELETED.
OLD)	C403	1-164-004-11 s CERAMIC, CHIP 0.1uF 10% 25V
204)	C403	1-163-038-00 s CERAMIC, CHIP 0.1uF 25V
OLD)	C404	1-164-004-11 s CERAMIC, CHIP 0.1uF 10% 25V
204)	C404	DELETED.
OLD)	C405	1-164-004-11 s CERAMIC, CHIP 0.1uF 10% 25V
204)	C405	1-163-038-00 s CERAMIC, CHIP 0.1uF 25V
OLD)	C406	1-126-803-11 s ELECT 47uF 20% 25V
605)	C406	1-104-664-11 s ELECT 47uF 20% 25V
OLD)	C409	NOT IN USE.
102)	C409	1-126-933-11 s ELECT 100uF 20% 16V
OLD)	C410	NOT IN USE.
110)	C410	1-124-598-11 s ELECT 22uF 20% 25V
605)	C410	1-104-664-11 s ELECT 47uF 20% 25V
OLD)	C411	NOT IN USE.
110)	C411	1-124-598-11 s ELECT 22uF 20% 25V
605)	C411	1-104-664-11 s ELECT 47uF 20% 25V
OLD)	C412	NOT IN USE.
110)	C412	1-126-541-11 s ELECT 330uF 20% 25V
605)	C412	1-107-883-11 s ELECT 330uF 20% 25V
OLD)	C413	NOT IN USE.
110)	C413	1-126-541-11 s ELECT 330uF 20% 25V
605)	C413	1-107-883-11 s ELECT 330uF 20% 25V
OLD)	C414	NOT IN USE.
110)	C414	1-126-541-11 s ELECT 330uF 20% 25V
605)	C414	1-107-883-11 s ELECT 330uF 20% 25V
OLD)	C415	NOT IN USE.
110)	C415	1-126-541-11 s ELECT 330uF 20% 25V
605)	C415	1-107-883-11 s ELECT 330uF 20% 25V
OLD)	C416	NOT IN USE.
110)	C416	1-126-541-11 s ELECT 330uF 20% 25V
605)	C416	1-107-883-11 s ELECT 330uF 20% 25V

OLD)	C417	NOT IN USE.
110)	C417	1-126-336-11 s ELECT 220uF 20% 25V
605)	C417	1-107-889-11 s ELECT 220uF 20% 25V
OLD)	C418	NOT IN USE.
110)	C418	1-126-336-11 s ELECT 220uF 20% 25V
605)	C418	1-107-889-11 s ELECT 220uF 20% 25V
OLD)	C450	1-126-803-11 s ELECT 47uF 20% 25V
605)	C450	1-104-664-11 s ELECT 47uF 20% 25V
OLD)	C451	1-126-803-11 s ELECT 47uF 20% 25V
605)	C451	1-104-664-11 s ELECT 47uF 20% 25V
OLD)	C452	1-126-803-11 s ELECT 47uF 20% 25V
605)	C452	1-104-664-11 s ELECT 47uF 20% 25V
OLD)	C453	1-126-803-11 s ELECT 47uF 20% 25V
605)	C453	1-104-664-11 s ELECT 47uF 20% 25V
OLD)	C454	1-126-803-11 s ELECT 47uF 20% 25V
605)	C454	1-104-664-11 s ELECT 47uF 20% 25V
OLD)	C455	1-126-803-11 s ELECT 47uF 20% 25V
605)	C455	1-104-664-11 s ELECT 47uF 20% 25V
OLD)	C456	1-126-803-11 s ELECT 47uF 20% 25V
605)	C456	1-104-664-11 s ELECT 47uF 20% 25V
OLD)	C457	1-126-803-11 s ELECT 47uF 20% 25V
605)	C457	1-104-664-11 s ELECT 47uF 20% 25V
OLD)	C458	1-126-803-11 s ELECT 47uF 20% 25V
605)	C458	1-104-664-11 s ELECT 47uF 20% 25V
OLD)	C459	1-126-803-11 s ELECT 47uF 20% 25V
605)	C459	1-104-664-11 s ELECT 47uF 20% 25V
OLD)	C460	1-126-803-11 s ELECT 47uF 20% 25V
605)	C460	1-104-664-11 s ELECT 47uF 20% 25V
OLD)	C461	1-126-803-11 s ELECT 47uF 20% 25V
605)	C461	1-104-664-11 s ELECT 47uF 20% 25V
OLD)	C462	1-164-004-11 s CERAMIC, CHIP 0.1uF 10% 25V
204)	C462	1-163-038-00 s CERAMIC, CHIP 0.1uF 25V
OLD)	C463	1-164-004-11 s CERAMIC, CHIP 0.1uF 10% 25V
204)	C463	1-163-038-00 s CERAMIC, CHIP 0.1uF 25V
OLD)	C464	1-126-803-11 s ELECT 47uF 20% 25V
605)	C464	1-104-664-11 s ELECT 47uF 20% 25V
OLD)	C466	1-126-803-11 s ELECT 47uF 20% 25V
605)	C466	1-104-664-11 s ELECT 47uF 20% 25V
OLD)	C467	1-164-004-11 s CERAMIC, CHIP 0.1uF 10% 25V
204)	C467	1-163-038-00 s CERAMIC, CHIP 0.1uF 25V
OLD)	C468	1-126-803-11 s ELECT 47uF 20% 25V
605)	C468	1-104-664-11 s ELECT 47uF 20% 25V
OLD)	C469	1-164-004-11 s CERAMIC, CHIP 0.1uF 10% 25V
204)	C469	1-163-038-00 s CERAMIC, CHIP 0.1uF 25V
OLD)	C470	1-126-803-11 s ELECT 47uF 20% 25V
605)	C470	1-104-664-11 s ELECT 47uF 20% 25V
OLD)	C471	1-164-004-11 s CERAMIC, CHIP 0.1uF 10% 25V
204)	C471	1-163-038-00 s CERAMIC, CHIP 0.1uF 25V
OLD)	C472	1-164-004-11 s CERAMIC, CHIP 0.1uF 10% 25V
204)	C472	1-163-038-00 s CERAMIC, CHIP 0.1uF 25V
OLD)	C473	1-126-803-11 s ELECT 47uF 20% 25V
605)	C473	1-104-664-11 s ELECT 47uF 20% 25V
OLD)	C474	1-126-803-11 s ELECT 47uF 20% 25V
605)	C474	1-104-664-11 s ELECT 47uF 20% 25V

(MOA-05 BOARD)

OLD)	C475	1-126-803-11 s ELECT 47uF 20% 25V
605)	C475	1-104-664-11 s ELECT 47uF 20% 25V
OLD)	C477	1-126-803-11 s ELECT 47uF 20% 25V
605)	C477	1-104-664-11 s ELECT 47uF 20% 25V
OLD)	C479	1-126-803-11 s ELECT 47uF 20% 25V
605)	C479	1-104-664-11 s ELECT 47uF 20% 25V
OLD)	C481	1-126-803-11 s ELECT 47uF 20% 25V
605)	C481	1-104-664-11 s ELECT 47uF 20% 25V
OLD)	C476	1-164-004-11 s CERAMIC, CHIP 0.1uF 10% 25V
204)	C476	1-163-038-00 s CERAMIC, CHIP 0.1uF 25V
OLD)	C478	1-164-004-11 s CERAMIC, CHIP 0.1uF 10% 25V
204)	C478	1-163-038-00 s CERAMIC, CHIP 0.1uF 25V
OLD)	C480	1-164-004-11 s CERAMIC, CHIP 0.1uF 10% 25V
204)	C480	1-163-038-00 s CERAMIC, CHIP 0.1uF 25V
OLD)	C482	1-164-004-11 s CERAMIC, CHIP 0.1uF 10% 25V
204)	C482	DELETED.
OLD)	C483	1-164-004-11 s CERAMIC, CHIP 0.1uF 10% 25V
204)	C483	1-163-038-00 s CERAMIC, CHIP 0.1uF 25V
OLD)	C484	1-164-004-11 s CERAMIC, CHIP 0.1uF 10% 25V
204)	C484	1-163-038-00 s CERAMIC, CHIP 0.1uF 25V
OLD)	C485	1-164-004-11 s CERAMIC, CHIP 0.1uF 10% 25V
204)	C485	1-163-038-00 s CERAMIC, CHIP 0.1uF 25V
OLD)	C486	NOT IN USE.
204)	C486	1-163-038-00 s CERAMIC, CHIP 0.1uF 25V
OLD)	C487	1-164-004-11 s CERAMIC, CHIP 0.1uF 10% 25V
204)	C487	1-163-038-00 s CERAMIC, CHIP 0.1uF 25V
OLD)	C488	1-164-004-11 s CERAMIC, CHIP 0.1uF 10% 25V
204)	C488	1-163-038-00 s CERAMIC, CHIP 0.1uF 25V
OLD)	C489	1-164-004-11 s CERAMIC, CHIP 0.1uF 10% 25V
204)	C489	1-163-038-00 s CERAMIC, CHIP 0.1uF 25V
OLD)	C490	1-164-004-11 s CERAMIC, CHIP 0.1uF 10% 25V
204)	C490	1-163-038-00 s CERAMIC, CHIP 0.1uF 25V
OLD)	C491	1-164-004-11 s CERAMIC, CHIP 0.1uF 10% 25V
204)	C491	1-163-038-00 s CERAMIC, CHIP 0.1uF 25V
OLD)	FL1	1-236-127-11 s FILTER, LOW-PASS
306)	FL1	1-236-127-21 s FILTER, LOW PASS
OLD)	FL3	1-236-127-11 s FILTER, LOW-PASS
306)	FL3	1-236-127-21 s FILTER, LOW PASS
OLD)	FL4	1-236-127-11 s FILTER, LOW-PASS
306)	FL4	1-236-127-21 s FILTER, LOW PASS
OLD)	FL5	1-236-127-11 s FILTER, LOW-PASS
306)	FL5	1-236-127-21 s FILTER, LOW PASS
OLD)	FL8	NOT IN USE.
110)	FL8	1-236-127-11 s FILTER, LOW-PASS
306)	FL8	1-236-127-21 s FILTER, LOW PASS
OLD)	ICE1	8-759-000-48 s IC MC14052BCP
110)	ICE1	DELETED.
OLD)	ICF2	8-759-000-48 s IC MC14052BCP
110)	ICF2	DELETED.
OLD)	ICK16	---PENDING-- s IC CY7C225-30PC, PROM, BLANK
203)	ICK16	8-759-081-70 o IC 7C225-MOA0501-2, PROM
OLD)	ICM17	8-759-062-40 s IC SM5842APT
203)	ICM17	8-759-156-71 s IC SM5843AP1
605)	ICM17	8-759-062-40 s IC SM5842APT

(MOA-05 BOARD)

```
OLD)  L1      1-421-370-00 s COIL, CHOKE
110)  L1      1-460-085-11 s COIL, CHOKE 6.8uH

OLD)  L2      1-421-370-00 s COIL, CHOKE
110)  L2      1-460-085-11 s COIL, CHOKE 6.8uH
OLD)  L3      1-421-370-00 s COIL, CHOKE
110)  L3      1-460-085-11 s COIL, CHOKE 6.8uH
OLD)  L4      1-421-370-00 s COIL, CHOKE
110)  L4      1-460-085-11 s COIL, CHOKE 6.8uH

OLD)  L5      1-421-370-00 s COIL, CHOKE
110)  L5      1-460-085-11 s COIL, CHOKE 6.8uH
OLD)  L6      1-421-370-00 s COIL, CHOKE
110)  L6      1-460-085-11 s COIL, CHOKE 6.8uH
OLD)  L7      1-421-370-00 s COIL, CHOKE
110)  L7      1-460-085-11 s COIL, CHOKE 6.8uH

OLD)  R47     1-214-689-11 s METAL 22 1% 1/4W
110)  R47     1-215-381-00 s METAL 22 1% 1/6W
OLD)  R48     1-214-689-11 s METAL 22 1% 1/4W
110)  R48     1-215-381-00 s METAL 22 1% 1/6W
OLD)  R140    1-210-828-00 s CARBON 4.7M 5% 1/4W
110)  R140    DELETED.

OLD)  R141    1-215-428-00 s METAL 2k 1% 1/6W
110)  R141    DELETED.
OLD)  R149    1-215-421-00 s METAL 1k 1% 1/6W
203)  R149    1-215-422-00 s METAL 1.1k 1% 1/4W
OLD)  R158    1-215-421-00 s METAL 1k 1% 1/6W
203)  R158    1-215-422-00 s METAL 1.1k 1% 1/4W

OLD)  R232    1-214-712-00 s METAL 200 1% 1/4W
110)  R232    1-215-404-00 s METAL 200 1% 1/6W
OLD)  R261    1-214-712-00 s METAL 200 1% 1/4W
110)  R261    1-215-404-00 s METAL 200 1% 1/6W
OLD)  R272    1-214-712-00 s METAL 200 1% 1/4W
110)  R272    1-215-404-00 s METAL 200 1% 1/6W

OLD)  R288    1-215-373-31 s METAL 10 1% 1/6W
110)  R288    DELETED.
OLD)  R292    1-215-427-00 s METAL 1.8k  1% 1/6W
203)  R292    1-215-425-00 s METAL 1.5k 1% 1/4W
OLD)  R294    1-214-712-00 s METAL 200 1% 1/4W
110)  R294    1-215-404-00 s METAL 200 1% 1/6W
203)  R294    1-215-411-00 s METAL 390 1% 1/4W

OLD)  R303    1-215-427-00 s METAL 1.8k  1% 1/6W
203)  R303    1-215-425-00 s METAL 1.5k 1% 1/4W
OLD)  R305    1-214-712-00 s METAL 200 1% 1/4W
110)  R305    1-215-404-00 s METAL 200 1% 1/6W
203)  R305    1-215-411-00 s METAL 390 1% 1/4W

OLD)  R319    1-214-712-00 s METAL 200 1% 1/4W
110)  R319    1-215-404-00 s METAL 200 1% 1/6W
OLD)  R321    1-214-712-00 s METAL 200 1% 1/4W
110)  R321    1-215-404-00 s METAL 200 1% 1/6W

OLD)  R323    1-214-712-00 s METAL 200 1% 1/4W
110)  R323    1-215-404-00 s METAL 200 1% 1/6W
203)  R323    1-215-411-00 s METAL 390 1% 1/4W
OLD)  R325    1-214-712-00 s METAL 200 1% 1/4W
110)  R325    1-215-404-00 s METAL 200 1% 1/6W
203)  R325    1-215-411-00 s METAL 390 1% 1/4W
```

(MOA-05 BOARD)

```
OLD)  R341    1-215-443-00 s METAL 8.2k 1% 1/6W
210):DVR-2100 , 211):DVR-2000
210)  R341    1-215-445-00 s METAL 10k 1% 1/4W
211)  R341    1-215-445-00 s METAL 10k 1% 1/4W
OLD)  R343    1-215-443-00 s METAL 8.2k 1% 1/6W
210):DVR-2100 , 211):DVR-2000

210)  R343    1-215-445-00 s METAL 10k 1% 1/4W
211)  R343    1-215-445-00 s METAL 10k 1% 1/4W
OLD)  R500    NOT IN USE.
110)  R500    1-216-089-00 s METAL, CHIP 47k 5% 1/10W
OLD)  R501    NOT IN USE.
110)  R501    1-216-089-00 s METAL, CHIP 47k 5% 1/10W

OLD)  R502    NOT IN USE.
110)  R502    1-216-089-00 s METAL, CHIP 47k 5% 1/10W
OLD)  R503    NOT IN USE.
110)  R503    1-216-089-00 s METAL, CHIP 47k 5% 1/10W
OLD)  R504    NOT IN USE.
110)  R504    1-216-089-00 s METAL, CHIP 47k 5% 1/10W

OLD)  R505    NOT IN USE.
110)  R505    1-216-089-00 s METAL, CHIP 47k 5% 1/10W
OLD)  R506    NOT IN USE.
110)  R506    1-216-089-00 s METAL, CHIP 47k 5% 1/10W
OLD)  R507    NOT IN USE.
110)  R507    1-216-089-00 s METAL, CHIP 47k 5% 1/10W

OLD)  R508    NOT IN USE.
110)  R508    1-216-089-00 s METAL, CHIP 47k 5% 1/10W
OLD)  R509    NOT IN USE.
110)  R509    1-216-089-00 s METAL, CHIP 47k 5% 1/10W
OLD)  R510    NOT IN USE.
110)  R510    1-216-089-00 s METAL, CHIP 47k 5% 1/10W

OLD)  R511    NOT IN USE.
110)  R511    1-216-089-00 s METAL, CHIP 47k 5% 1/10W
OLD)  R512    NOT IN USE.
110)  R512    1-216-089-00 s METAL, CHIP 47k 5% 1/10W
OLD)  R513    NOT IN USE.
110)  R513    1-216-089-00 s METAL, CHIP 47k 5% 1/10W

OLD)  R514    NOT IN USE.
110)  R514    1-216-089-00 s METAL, CHIP 47k 5% 1/10W
OLD)  R515    NOT IN USE.
110)  R515    1-216-089-00 s METAL, CHIP 47k 5% 1/10W
OLD)  R516    NOT IN USE.
110)  R516    1-216-089-00 s METAL, CHIP 47k 5% 1/10W

OLD)  R517    NOT IN USE.
110)  R517    1-216-089-00 s METAL, CHIP 47k 5% 1/10W
OLD)  R518    NOT IN USE.
110)  R518    1-216-089-00 s METAL, CHIP 47k 5% 1/10W
OLD)  R519    NOT IN USE.
110)  R519    1-216-089-00 s METAL, CHIP 47k 5% 1/10W

OLD)  R520    NOT IN USE.
110)  R520    1-216-089-00 s METAL, CHIP 47k 5% 1/10W
OLD)  R521    NOT IN USE.
110)  R521    1-216-089-00 s METAL, CHIP 47k 5% 1/10W
OLD)  R522    NOT IN USE.
110)  R522    1-216-089-00 s METAL, CHIP 47k 5% 1/10W
```

(MOA-05 BOARD)

OLD)	R523	NOT IN USE.
110)	R523	1-216-089-00 s METAL, CHIP 47k 5% 1/10W
OLD)	R524	NOT IN USE.
110)	R524	1-216-089-00 s METAL, CHIP 47k 5% 1/10W
OLD)	R525	NOT IN USE.
110)	R525	1-216-089-00 s METAL, CHIP 47k 5% 1/10W
OLD)	R526	NOT IN USE.
110)	R526	1-216-089-00 s METAL, CHIP 47k 5% 1/10W
OLD)	R527	NOT IN USE.
110)	R527	1-216-089-00 s METAL, CHIP 47k 5% 1/10W
OLD)	R528	NOT IN USE.
110)	R528	1-216-089-00 s METAL, CHIP 47k 5% 1/10W
OLD)	R529	NOT IN USE.
110)	R529	1-216-089-00 s METAL, CHIP 47k 5% 1/10W
OLD)	R530	NOT IN USE.
110)	R530	1-216-089-00 s METAL, CHIP 47k 5% 1/10W
OLD)	R531	NOT IN USE.
110)	R531	1-216-089-00 s METAL, CHIP 47k 5% 1/10W
OLD)	R535	NOT IN USE.
110)	R535	1-216-089-00 s METAL, CHIP 47k 5% 1/10W
OLD)	R536	NOT IN USE.
110)	R536	1-216-089-00 s METAL, CHIP 47k 5% 1/10W
OLD)	R537	NOT IN USE.
110)	R537	1-216-089-00 s METAL, CHIP 47k 5% 1/10W
OLD)	R538	NOT IN USE.
110)	R538	1-216-089-00 s METAL, CHIP 47k 5% 1/10W
OLD)	R539	NOT IN USE.
110)	R539	1-216-089-00 s METAL, CHIP 47k 5% 1/10W
OLD)	R540	NOT IN USE.
110)	R540	1-216-089-00 s METAL, CHIP 47k 5% 1/10W
OLD)	R541	NOT IN USE.
110)	R541	1-216-089-00 s METAL, CHIP 47k 5% 1/10W
OLD)	R542	NOT IN USE.
110)	R542	1-216-089-00 s METAL, CHIP 47k 5% 1/10W
OLD)	R543	NOT IN USE.
110)	R543	1-216-089-00 s METAL, CHIP 47k 5% 1/10W
OLD)	R544	NOT IN USE.
110)	R544	1-216-089-00 s METAL, CHIP 47k 5% 1/10W
OLD)	R545	NOT IN USE.
110)	R545	1-216-089-00 s METAL, CHIP 47k 5% 1/10W
OLD)	R546	NOT IN USE.
110)	R546	1-216-089-00 s METAL, CHIP 47k 5% 1/10W
OLD)	R547	NOT IN USE.
110)	R547	1-216-089-00 s METAL, CHIP 47k 5% 1/10W
OLD)	RB7	1-235-005-00 s RESISTOR BLOCK 47kx8
110)	RB7	DELETED.
OLD)	RB8	1-235-005-00 s RESISTOR BLOCK 47kx8
110)	RB8	DELETED.
OLD)	RB9	1-235-005-00 s RESISTOR BLOCK 47kx8
110)	RB9	DELETED.
OLD)	RB10	1-235-005-00 s RESISTOR BLOCK 47kx8
110)	RB10	DELETED.
OLD)	RB11	1-235-005-00 s RESISTOR BLOCK 47kx8
110)	RB11	DELETED.
OLD)	RB12	1-235-005-00 s RESISTOR BLOCK 47kx8
110)	RB12	DELETED.

MY-46 BOARD

OLD)	C6	1-161-890-11 s CERAMIC 0.022uF 50V
210)	C6	1-164-097-11 s CERAMIC 0.022uF 50V
OLD)	C7	1-161-890-11 s CERAMIC 0.022uF 50V
210)	C7	1-164-097-11 s CERAMIC 0.022uF 50V
OLD)	C8	1-161-890-11 s CERAMIC 0.022uF 50V
210)	C8	1-164-097-11 s CERAMIC 0.022uF 50V
OLD)	C9	1-161-890-11 s CERAMIC 0.022uF 50V
210)	C9	1-164-097-11 s CERAMIC 0.022uF 50V
OLD)	C10	1-161-890-11 s CERAMIC 0.022uF 50V
210)	C10	1-164-097-11 s CERAMIC 0.022uF 50V
OLD)	D1	8-719-981-00 s DIODE ERC81-004
505)	D1	8-719-982-04 s DIODE ERB81-004
OLD)	D2	8-719-981-00 s DIODE ERC81-004
505)	D2	8-719-982-04 s DIODE ERB81-004
OLD)	D3	8-719-981-00 s DIODE ERC81-004
505)	D3	8-719-982-04 s DIODE ERB81-004
OLD)	IC10	8-759-519-33 s IC DS1230Y, NOVRAM
210)	IC10	8-759-158-11 s IC BQ4011YMA-100, NOVRAM
508)	IC10	8-749-011-87 s IC M48Z30Y-100PM1

PA-142 BOARD

OLD)	1pc	A-6013-125-A o MOUNTED CIRCUIT BOARD, PA-142
104)	1pc	A-6013-125-B o MOUNTED CIRCUIT BOARD, PA-142

*The new board is upward compatible with the former one.
See section 22 for details.

PD-49 BOARD

OLD)	D101	8-719-911-06 s DIODE 1SS106
110)	D101	8-719-820-61 s DIODE 1SS294
OLD)	D102	NOT IN USE.
110)	D102	8-719-820-61 s DIODE 1SS294
OLD)	D103	NOT IN USE.
110)	D103	8-719-820-61 s DIODE 1SS294
OLD)	D111	8-719-911-06 s DIODE 1SS106
110)	D111	8-719-820-61 s DIODE 1SS294
OLD)	D112	NOT IN USE.
110)	D112	8-719-820-61 s DIODE 1SS294
OLD)	D113	NOT IN USE.
110)	D113	8-719-820-61 s DIODE 1SS294
OLD)	D201	8-719-109-60 s DIODE RD2.7ES-B2
110)	D201	8-719-105-32 s DIODE RD2.7M-B2
OLD)	JP102	NOT IN USE.
110)	JP102	1-566-388-11 s CONNECTOR, 8P, MALE
OLD)	JS102	NOT IN USE.
110)	JS102	1-563-859-11 s PLUG, SHORTING
302)	JS102	DELETED.
OLD)	JS101	NOT IN USE.
302)	JS101	1-563-859-11 s PLUG, SHORTING

(PD-49 BOARD)

OLD)	Q101	8-729-140-44	s	TRANSISTOR 2SC3732-K
110)	Q101	8-729-140-47	s	TRANSISTOR 2SC3735-B34
OLD)	Q102	8-729-140-44	s	TRANSISTOR 2SC3732-K
110)	Q102	8-729-140-47	s	TRANSISTOR 2SC3735-B34
OLD)	Q103	8-729-320-81	s	TRANSISTOR 2SJ120S-L
110)	Q103	8-729-322-23	s	TRANSISTOR 2SJ120S
OLD)	Q104	8-729-322-21	s	TRANSISTOR 2SK416-L
110)	Q104	8-729-322-20	s	TRANSISTOR 2SK416S
OLD)	Q111	8-729-140-44	s	TRANSISTOR 2SC3732-K
110)	Q111	8-729-140-47	s	TRANSISTOR 2SC3735-B34
OLD)	Q112	8-729-140-44	s	TRANSISTOR 2SC3732-K
110)	Q112	8-729-140-47	s	TRANSISTOR 2SC3735-B34
OLD)	Q113	8-729-320-81	s	TRANSISTOR 2SJ120S-L
110)	Q113	8-729-322-23	s	TRANSISTOR 2SJ120S
OLD)	Q114	8-729-322-21	s	TRANSISTOR 2SK416-L
110)	Q114	8-729-322-20	s	TRANSISTOR 2SK416S
OLD)	Q202	8-729-190-12	s	TRANSISTOR 2SC2901
110)	Q202	8-729-100-66	s	TRANSISTOR 2SC1623
OLD)	R105	1-216-619-11	s	METAL, CHIP 47 0.5% 1/10W
110)	R105	1-216-651-11	s	METAL, CHIP 1K 0.5% 1/10W
OLD)	R106	1-216-619-11	s	METAL, CHIP 47 0.5% 1/10W
110)	R106	1-216-651-11	s	METAL, CHIP 1K 0.5% 1/10W
OLD)	R115	1-216-619-11	s	METAL, CHIP 47 0.5% 1/10W
110)	R115	1-216-651-11	s	METAL, CHIP 1K 0.5% 1/10W
OLD)	R116	1-216-619-11	s	METAL, CHIP 47 0.5% 1/10W
110)	R116	1-216-651-11	s	METAL, CHIP 1K 0.5% 1/10W
OLD)	R205	1-216-624-11	s	METAL, CHIP 75 0.5% 1/10W
201)	R205	DELETED.		
OLD)	R212	1-249-421-11	s	CARBON 2.2K 5% 1/4W
110)	R212	1-216-661-11	s	METAL, CHIP 2.7K 0.5% 1/10W

PE-18 BOARD

OLD)	D1	8-719-955-32	s	LED PG5531KX,GRN
312)	D1	8-719-027-67	s	DIODE GL8KG21T

PS-219 BOARD

OLD)	CP1	1-235-966-11	s	ENCAPSULATED COMPONENTS, CR
306)	CP1	1-235-966-21	s	ENCAPSULATED COMPONENTS, CR
OLD)	CP2	1-235-966-11	s	ENCAPSULATED COMPONENTS, CR
306)	CP2	1-235-966-21	s	ENCAPSULATED COMPONENTS, CR
OLD)	IC1	8-741-128-10	s	IC BX1281
303)	IC1	1-810-270-11	s	IC BP-026
OLD)	IC4	8-741-128-10	s	IC BX1281
303)	IC4	1-810-270-11	s	IC BP-026
OLD)	L2	1-413-089-00	s	COIL, SN 72uH
302)	L2	1-409-309-00	s	COIL, SN 72uH
OLD)	TP1	3-657-703-01	o	TERMINAL, TP
204)	TP1	DELETED.		
OLD)	TP2	3-657-703-01	o	TERMINAL, TP
204)	TP2	DELETED.		

(PS-219 BOARD)

OLD)	TP3	3-657-703-01	o	TERMINAL, TP
204)	TP3	DELETED.		
OLD)	TP4	3-657-703-01	o	TERMINAL, TP
204)	TP4	DELETED.		

PS-256 BOARD

OLD)	1pc	A-6023-071-A	o	MOUNTED CIRCUIT BOARD,PS-256
609)	1pc	A-8313-074-A	o	MOUNTED CIRCUIT BOARD,PS-256
OLD)	4pcs	4-607-492-01	o	HEAT SINk (M)
210)	4pcs	1pcs		
OLD)	8pcs	7-682-548-09	s	SCREW, +B 3x8
210)	8pcs	2pcs		
OLD)	C3	1-161-744-00	s	CERAMIC 0.01uF 400V
605)	C3	1-113-916-11	s	CERAMIC 0.01uF 250V
OLD)	C4	1-161-744-00	s	CERAMIC 0.01uF 400V
605)	C4	1-113-916-11	s	CERAMIC 0.01uF 250V
OLD)	C5	1-161-744-00	s	CERAMIC 0.01uF 400V
605)	C5	1-113-916-11	s	CERAMIC 0.01uF 250V
OLD)	C6	1-161-744-00	s	CERAMIC 0.01uF 400V
605)	C6	1-113-916-11	s	CERAMIC 0.01uF 250V
OLD)	C24	1-162-268-00	s	CERAMIC 0.0033uF 10% 400V
605)	C24	1-113-915-51	s	CERAMIC 0.0033uF 10% 250V
OLD)	C25	1-162-268-00	s	CERAMIC 0.0033uF 10% 400V
605)	C25	1-113-915-51	s	CERAMIC 0.0033uF 10% 250V
OLD)	C125	1-126-588-11	s	ELECT 1000uF 20% 16V
605)	C125	1-124-579-51	s	ELECT 1000uF 20% 16V
OLD)	C126	1-126-588-11	s	ELECT 1000uF 20% 16V
605)	C126	1-124-579-51	s	ELECT 1000uF 20% 16V
OLD)	C127	1-126-588-11	s	ELECT 1000uF 20% 16V
605)	C127	1-124-579-51	s	ELECT 1000uF 20% 16V
OLD)	C128	1-126-588-11	s	ELECT 1000uF 20% 16V
605)	C128	1-124-579-51	s	ELECT 1000uF 20% 16V
OLD)	C129	1-126-588-11	s	ELECT 1000uF 20% 16V
605)	C129	1-124-579-51	s	ELECT 1000uF 20% 16V
OLD)	C130	1-126-588-11	s	ELECT 1000uF 20% 16V
605)	C130	1-124-579-51	s	ELECT 1000uF 20% 16V
OLD)	C131	1-124-510-11	s	ELECT 220uF 20% 16V
605)	C131	1-111-059-11	s	ELECT 220uF 20% 16V
OLD)	C135	1-124-510-11	s	ELECT 220uF 20% 16V
605)	C135	1-111-059-11	s	ELECT 220uF 20% 16V
OLD)	C139	1-124-510-11	s	ELECT 220uF 20% 16V
605)	C139	1-111-059-11	s	ELECT 220uF 20% 16V
OLD)	CP1	1-235-966-11	s	ENCAPSULATED COMPONENTS, CR
212)	CP1	1-235-966-21	s	ENCAPSULATED COMPONENTS, CR
OLD)	CP101	1-235-966-11	s	ENCAPSULATED COMPONENTS, CR
212)	CP101	1-235-966-21	s	ENCAPSULATED COMPONENTS, CR
OLD)	CP103	1-235-965-11	s	ENCAPSULATED COMPONENTS, CR
212)	CP103	1-235-965-21	s	ENCAPSULATED COMPONENTS, CR
OLD)	CP104	1-235-965-11	s	ENCAPSULATED COMPONENTS, CR
212)	CP104	1-235-965-21	s	ENCAPSULATED COMPONENTS, CR
OLD)	CP105	1-235-965-11	s	ENCAPSULATED COMPONENTS, CR
212)	CP105	1-235-965-21	s	ENCAPSULATED COMPONENTS, CR
OLD)	CP106	1-235-966-11	s	ENCAPSULATED COMPONENTS, CR
212)	CP106	1-235-966-21	s	ENCAPSULATED COMPONENTS, CR

(PS-256 BOARD)

OLD)	CP107	1-235-966-11	s	ENCAPSULATED COMPONENTS, CR
212)	CP107	DELETED.		
OLD)	CP108	1-235-965-11	s	ENCAPSULATED COMPONENTS, CR
212)	CP108	1-235-965-21	s	ENCAPSULATED COMPONENTS, CR
OLD)	CP109	1-235-965-11	s	ENCAPSULATED COMPONENTS, CR
212)	CP109	1-235-965-21	s	ENCAPSULATED COMPONENTS, CR
OLD)	CP110	1-235-966-11	s	ENCAPSULATED COMPONENTS, CR
212)	CP110	DELETED.		
OLD)	CP111	1-235-966-11	s	ENCAPSULATED COMPONENTS, CR
212)	CP111	1-235-966-21	s	ENCAPSULATED COMPONENTS, CR
OLD)	D106	8-719-550-02	s	DIODE S5KC20
510)	D106	8-719-025-10	s	DIODE D8LC20U
OLD)	D116	8-719-200-02	s	DIODE 10E2
112)	D116	DELETED.		
OLD)	F2	!1-576-133-11	s	FUSE 3.15A 250V (FOR UC,EK)
609)	F2	!1-576-230-41	s	FUSE (H.B.C) (FOR EK)
609)	F2	!1-576-133-11	s	FUSE 3.15A 250V (FOR UC)
OLD)	IC1	8-741-128-10	s	IC BX1281
303)	IC1	1-810-270-11	s	IC BP-026
OLD)	IC2	8-741-128-10	s	IC BX1281
303)	IC2	1-810-270-11	s	IC BP-026
OLD)	IC3	8-741-128-10	s	IC BX1281
303)	IC3	1-810-270-11	s	IC BP-026
OLD)	IC4	8-741-128-10	s	IC BX1281
303)	IC4	1-810-270-11	s	IC BP-026
OLD)	IC5	8-741-128-10	s	IC BX1281
303)	IC5	1-810-270-11	s	IC BP-026
OLD)	IC6	8-741-128-10	s	IC BX1281
303)	IC6	1-810-270-11	s	IC BP-026
OLD)	IC7	!8-719-902-56	s	IC PHOTOCOUPLER PC817
609)	IC7	!8-749-923-47	s	IC PHOTOCOUPLER PC817Y1

REC-09 BOARD

OLD)	1pc	1-526-659-00	o	SOCKET, IC 28P
210)	1pc	DELETED.		
OLD)	2pcs	NOT IN USE.		
110)	2pcs	4-914-895-01	s	FOOT, RUBBER
OLD)	3pcs	1-540-187-21	o	SOCKET, IC (DP) 28P
210)	3pcs	DELETED.		
OLD)	6pcs	1-526-816-21	o	SOCKET, IC (DP) 24P
210)	6pcs	DELETED.		
OLD)	C12	1-126-157-11	s	ELECT 10uF 20% 16V
605)	C12	1-126-791-11	s	ELECT 10uF 20% 16V
OLD)	C15	1-126-157-11	s	ELECT 10uF 20% 16V
605)	C15	1-126-791-11	s	ELECT 10uF 20% 16V
OLD)	C22	1-107-042-00	s	MICA 2.2pF 500V
605)	C22	1-107-582-11	s	CERAMIC 2pF 500V
OLD)	C25	1-107-167-11	s	MICS 75pF 5% 50V
605)	C25	1-101-890-00	s	CERAMIC 75pF 5% 50V
OLD)	C28	1-107-077-00	s	MICA 47pF 5% 50V
605)	C28	1-102-852-91	s	CERAMIC 47pF 5% 50V

(REC-09 BOARD)

OLD)	C29	1-107-207-00	s	MICA 16pF 5% 500V
605)	C29	1-102-594-11	s	CERAMIC 16pF 5% 500V
OLD)	C33	1-126-157-11	s	ELECT 10uF 20% 16V
605)	C33	1-126-791-11	s	ELECT 10uF 20% 16V
OLD)	C39	1-126-157-11	s	ELECT 10uF 20% 16V
605)	C39	1-126-791-11	s	ELECT 10uF 20% 16V
OLD)	C43	1-126-157-11	s	ELECT 10uF 20% 16V
605)	C43	1-126-791-11	s	ELECT 10uF 20% 16V
OLD)	C49	1-131-365-00	s	TANTAL 10uF 10% 20V
605)	C49	1-102-353-00	s	TANTAL 10uF 20% 35V
OLD)	C67	1-163-038-00	s	CERAMIC, CHIP 0.1uF 25V
210)	C67	DELETED.		
OLD)	C70	1-163-038-00	s	CERAMIC, CHIP 0.1uF 25V
210)	C70	DELETED.		
OLD)	C72	1-163-038-00	s	CERAMIC, CHIP 0.1uF 25V
210)	C72	DELETED.		
OLD)	C75	1-163-038-00	s	CERAMIC, CHIP 0.1uF 25V
210)	C75	DELETED.		
OLD)	C79	1-163-038-00	s	CERAMIC, CHIP 0.1uF 25V
210)	C79	DELETED.		
OLD)	C83	1-163-038-00	s	CERAMIC, CHIP 0.1uF 25V
210)	C83	DELETED.		
OLD)	C89	1-163-038-00	s	CERAMIC, CHIP 0.1uF 25V
210)	C89	DELETED.		
OLD)	C91	1-163-038-00	s	CERAMIC, CHIP 0.1uF 25V
210)	C91	DELETED.		
OLD)	C102	1-163-038-00	s	CERAMIC, CHIP 0.1uF 25V
210)	C102	DELETED.		
OLD)	C103	1-163-038-00	s	CERAMIC, CHIP 0.1uF 25V
210)	C103	DELETED.		
OLD)	C106	1-163-038-00	s	CERAMIC, CHIP 0.1uF 25V
210)	C106	DELETED.		
OLD)	C108	1-163-038-00	s	CERAMIC, CHIP 0.1uF 25V
210)	C108	DELETED.		
OLD)	C111	1-163-038-00	s	CERAMIC, CHIP 0.1uF 25V
210)	C111	DELETED.		
OLD)	C113	1-163-038-00	s	CERAMIC, CHIP 0.1uF 25V
210)	C113	DELETED.		
OLD)	C116	1-163-038-00	s	CERAMIC, CHIP 0.1uF 25V
210)	C116	DELETED.		
OLD)	C117	1-163-038-00	s	CERAMIC, CHIP 0.1uF 25V
210)	C117	DELETED.		
OLD)	C119	1-163-038-00	s	CERAMIC, CHIP 0.1uF 25V
210)	C119	DELETED.		
OLD)	C121	1-163-038-00	s	CERAMIC, CHIP 0.1uF 25V
210)	C121	DELETED.		
OLD)	C125	1-163-038-00	s	CERAMIC, CHIP 0.1uF 25V
210)	C125	DELETED.		
OLD)	C129	1-163-038-00	s	CERAMIC, CHIP 0.1uF 25V
210)	C129	DELETED.		
OLD)	C132	1-163-038-00	s	CERAMIC, CHIP 0.1uF 25V
210)	C132	DELETED.		
OLD)	C134	1-163-038-00	s	CERAMIC, CHIP 0.1uF 25V
210)	C134	DELETED.		

(REC-09 BOARD)

OLD)	C138	1-163-038-00 s CERAMIC, CHIP 0.1uF 25V
210)	C138	DELETED.
OLD)	C142	1-163-038-00 s CERAMIC, CHIP 0.1uF 25V
210)	C142	DELETED.
OLD)	C143	1-163-038-00 s CERAMIC, CHIP 0.1uF 25V
210)	C143	DELETED.
OLD)	C144	1-163-038-00 s CERAMIC, CHIP 0.1uF 25V
210)	C144	DELETED.
OLD)	C146	1-163-038-00 s CERAMIC, CHIP 0.1uF 25V
210)	C146	DELETED.
OLD)	C148	1-163-038-00 s CERAMIC, CHIP 0.1uF 25V
210)	C148	DELETED.
OLD)	C155	1-163-038-00 s CERAMIC, CHIP 0.1uF 25V
210)	C155	DELETED.
OLD)	C162	1-163-038-00 s CERAMIC, CHIP 0.1uF 25V
210)	C162	DELETED.
OLD)	C166	1-163-038-00 s CERAMIC, CHIP 0.1uF 25V
210)	C166	DELETED.
OLD)	C167	1-163-038-00 s CERAMIC, CHIP 0.1uF 25V
210)	C167	DELETED.
OLD)	C176	1-163-038-00 s CERAMIC, CHIP 0.1uF 25V
210)	C176	DELETED.
OLD)	C178	1-163-038-00 s CERAMIC, CHIP 0.1uF 25V
210)	C178	DELETED.
OLD)	C179	1-163-038-00 s CERAMIC, CHIP 0.1uF 25V
210)	C179	DELETED.
OLD)	C181	1-163-038-00 s CERAMIC, CHIP 0.1uF 25V
210)	C181	DELETED.
OLD)	C187	1-163-038-00 s CERAMIC, CHIP 0.1uF 25V
210)	C187	DELETED.
OLD)	C190	1-163-038-00 s CERAMIC, CHIP 0.1uF 25V
210)	C190	DELETED.
OLD)	C192	1-163-038-00 s CERAMIC, CHIP 0.1uF 25V
210)	C192	DELETED.
OLD)	C194	1-163-038-00 s CERAMIC, CHIP 0.1uF 25V
210)	C194	DELETED.
OLD)	C196	1-163-038-00 s CERAMIC, CHIP 0.1uF 25V
210)	C196	DELETED.
OLD)	C198	1-163-038-00 s CERAMIC, CHIP 0.1uF 25V
210)	C198	DELETED.
OLD)	C201	1-163-038-00 s CERAMIC, CHIP 0.1uF 25V
210)	C201	DELETED.
OLD)	C203	1-163-038-00 s CERAMIC, CHIP 0.1uF 25V
210)	C203	DELETED.
OLD)	C208	1-163-038-00 s CERAMIC, CHIP 0.1uF 25V
210)	C208	DELETED.
OLD)	C209	1-163-038-00 s CERAMIC, CHIP 0.1uF 25V
210)	C209	DELETED.
OLD)	C214	1-163-038-00 s CERAMIC, CHIP 0.1uF 25V
210)	C214	DELETED.
OLD)	C216	1-163-038-00 s CERAMIC, CHIP 0.1uF 25V
210)	C216	DELETED.
OLD)	C218	1-163-038-00 s CERAMIC, CHIP 0.1uF 25V
210)	C218	DELETED.

(REC-09 BOARD)

OLD)	C219	1-163-038-00 s CERAMIC, CHIP 0.1uF 25V
210)	C219	DELETED.
OLD)	C221	1-163-038-00 s CERAMIC, CHIP 0.1uF 25V
210)	C221	DELETED.
OLD)	ICJ11	8-752-333-48 s IC CXK5464AP-35
211)	ICJ11	8-759-164-96 s IC TC55416P-25
503)	ICJ11	8-759-299-49 s IC CY7C164-25PC
OLD)	ICJ12	8-752-333-48 s IC CXK5464AP-35
211)	ICJ12	8-759-164-96 s IC TC55416P-25
503)	ICJ12	8-759-299-49 s IC CY7C164-25PC
OLD)	ICJ15	8-752-333-48 s IC CXK5464AP-35
211)	ICJ15	8-759-164-96 s IC TC55416P-25
503)	ICJ15	8-759-299-49 s IC CY7C164-25PC
OLD)	ICJ16	8-752-333-48 s IC CXK5464AP-35
211)	ICJ16	8-759-164-96 s IC TC55416P-25
503)	ICJ16	8-759-299-49 s IC CY7C164-25PC
OLD)	ICK11	8-752-333-48 s IC CXK5464AP-35
211)	ICK11	8-759-164-96 s IC TC55416P-25
503)	ICK11	8-759-299-49 s IC CY7C164-25PC
OLD)	ICK12	8-752-333-48 s IC CXK5464AP-35
211)	ICK12	8-759-164-96 s IC TC55416P-25
503)	ICK12	8-759-299-49 s IC CY7C164-25PC
OLD)	ICK15	8-752-333-48 s IC CXK5464AP-35
211)	ICK15	8-759-164-96 s IC TC55416P-25
503)	ICK15	8-759-299-49 s IC CY7C164-25PC
OLD)	ICK16	8-752-333-48 s IC CXK5464AP-35
211)	ICK16	8-759-164-96 s IC TC55416P-25
503)	ICK16	8-759-299-49 s IC CY7C164-25PC
OLD)	L3	1-410-513-11 s INDUCTOR 22uH
310)	L3	1-410-513-51 s INDUCTOR 22uH
OLD)	L4	1-410-509-11 s INDUCTOR 10uH
310)	L4	1-410-509-51 s INDUCTOR 10uH
OLD)	L5	1-410-509-11 s INDUCTOR 10uH
310)	L5	1-410-509-51 s INDUCTOR 10uH
OLD)	L6	1-410-501-11 s INDUCTOR 2.2uH
310)	L6	1-410-501-51 s INDUCTOR 2.2uH
OLD)	L7	1-410-315-21 s INDUCTOR 0.68uH
310)	L7	1-414-140-51 s INDUCTOR 0.68uH
OLD)	L8	1-410-513-11 s INDUCTOR 22uH
310)	L8	1-410-513-51 s INDUCTOR 22uH
OLD)	L9	1-410-509-11 s INDUCTOR 10uH
310)	L9	1-410-509-51 s INDUCTOR 10uH
OLD)	L10	1-410-509-11 s INDUCTOR 10uH
310)	L10	1-410-509-51 s INDUCTOR 10uH
OLD)	L11	1-408-405-00 s INDUCTOR 4.7uH
310)	L11	1-410-505-51 s INDUCTOR 4.7uH
OLD)	L15	1-410-513-11 s INDUCTOR 22uH
310)	L15	1-410-513-51 s INDUCTOR 22uH

RF-23 BOARD

```
OLD)  1pc      A-6011-181-A o MOUNTED CIRCUIT BOARD, RF-23
103): For EK, 104): For J and UC
      1pc      A-6011-181-B o MOUNTED CIRCUIT BOARD, RF-23
304)  1pc      A-8271-761-B o MOUNTED CIRCUIT BOARD, RF-23
```

*The new board is upward compatible with the former one.
See section 22 for details.

```
OLD)  C11      1-163-097-00 s CERAMIC 15pF 5% 16V
605)  C11      1-163-231-11 s CERAMIC,CHIP 15pF 5% 16V
OLD)  C12      1-163-097-00 s CERAMIC 15pF 5% 16V
605)  C12      1-163-231-11 s CERAMIC,CHIP 15pF 5% 16V
OLD)  C112     1-163-245-11 s CERAMIC 56pF 5% 50V
110)  C112     1-163-239-11 s CERAMIC, CHIP 33pF 5% 50V

OLD)  C113     1-163-245-11 s CERAMIC 56pF 5% 50V
110)  C113     1-163-239-11 s CERAMIC, CHIP 33pF 5% 50V
OLD)  C114     1-163-245-11 s CERAMIC 56pF 5% 50V
110)  C114     1-163-239-11 s CERAMIC, CHIP 33pF 5% 50V
OLD)  C115     1-163-245-11 s CERAMIC 56pF 5% 50V
110)  C115     1-163-239-11 s CERAMIC, CHIP 33pF 5% 50V

OLD)  C162     NOT IN USE.
103): For EK, 104): For J and UC
103)  C162     1-107-042-00 s MICA 2.2pF 500V
203)  C162     1-163-085-00 s CERAMIC, CHIP 2pF 50V

OLD)  C163     NOT IN USE.
103): For EK, 104): For J and UC
103)  C163     1-107-042-00 s MICA 2.2pF 500V
203)  C163     1-163-085-00 s CERAMIC, CHIP 2pF 50V

OLD)  C164     NOT IN USE.
103): For EK, 104): For J and UC
103)  C164     1-107-042-00 s MICA 2.2pF 500V
203)  C164     1-163-085-00 s CERAMIC, CHIP 2pF 50V

OLD)  C165     NOT IN USE.
103): For EK, 104): For J and UC
103)  C165     1-107-042-00 s MICA 2.2pF 500V
203)  C165     1-163-085-00 s CERAMIC, CHIP 2pF 50V

OLD)  D11      8-719-911-19 s DIODE 1SS119
203)  D11      8-719-800-76 s DIODE 1SS226

OLD)  IC40     8-759-300-71 s IC HD14053BFP
509)  IC40     8-759-009-07 s IC MC14053BF
OLD)  IC41     8-759-300-71 s IC HD14053BFP
509)  IC41     8-759-009-07 s IC MC14053BF
OLD)  IC42     8-759-300-71 s IC HD14053BFP
509)  IC42     8-759-009-07 s IC MC14053BF

OLD)  R123     1-216-620-11 s METAL, CHIP 51 0.5% 1/10W
110)  R123     1-216-622-11 s METAL, CHIP 62 0.50% 1/10W
OLD)  R124     1-216-620-11 s METAL, CHIP 51 0.5% 1/10W
110)  R124     1-216-622-11 s METAL, CHIP 62 0.50% 1/10W
OLD)  R125     1-216-620-11 s METAL, CHIP 51 0.5% 1/10W
110)  R125     1-216-622-11 s METAL, CHIP 62 0.50% 1/10W

OLD)  R126     1-216-620-11 s METAL, CHIP 51 0.5% 1/10W
110)  R126     1-216-622-11 s METAL, CHIP 62 0.50% 1/10W
OLD)  R127     1-216-620-11 s METAL, CHIP 51 0.5% 1/10W
110)  R127     1-216-622-11 s METAL, CHIP 62 0.50% 1/10W
```

(RF-23 BOARD)

```
OLD)  R128     1-216-620-11 s METAL, CHIP 51 0.5% 1/10W
110)  R128     1-216-622-11 s METAL, CHIP 62 0.50% 1/10W

OLD)  R129     1-216-620-11 s METAL, CHIP 51 0.5% 1/10W
110)  R129     1-216-622-11 s METAL, CHIP 62 0.50% 1/10W
OLD)  R130     1-216-620-11 s METAL, CHIP 51 0.5% 1/10W
110)  R130     1-216-622-11 s METAL, CHIP 62 0.50% 1/10W
OLD)  R417     1-216-696-11 s METAL, CHIP 75k 0.5% 1/10W
105)  R417     1-216-691-11 s METAL, CHIP 47k 0.5% 1/10W

OLD)  R418     1-216-696-11 s METAL, CHIP 75k 0.5% 1/10W
105)  R418     1-216-691-11 s METAL, CHIP 47k 0.5% 1/10W
OLD)  R419     1-216-696-11 s METAL, CHIP 75k 0.5% 1/10W
105)  R419     1-216-691-11 s METAL, CHIP 47k 0.5% 1/10W
OLD)  R420     1-216-696-11 s METAL, CHIP 75k 0.5% 1/10W
105)  R420     1-216-691-11 s METAL, CHIP 47k 0.5% 1/10W

OLD)  R421     1-216-696-11 s METAL, CHIP 75k 0.5% 1/10W
105)  R421     1-216-691-11 s METAL, CHIP 47k 0.5% 1/10W
OLD)  R422     1-216-696-11 s METAL, CHIP 75k 0.5% 1/10W
105)  R422     1-216-691-11 s METAL, CHIP 47k 0.5% 1/10W
OLD)  R423     1-216-696-11 s METAL, CHIP 75k 0.5% 1/10W
105)  R423     1-216-691-11 s METAL, CHIP 47k 0.5% 1/10W

OLD)  R424     1-216-696-11 s METAL, CHIP 75k 0.5% 1/10W
105)  R424     1-216-691-11 s METAL, CHIP 47k 0.5% 1/10W

OLD)  RV17     1-228-456-00 s RES, ADJ METAL 1k
110)  RV17     1-228-455-00 s RES, ADJ METAL 500
OLD)  RV18     1-228-456-00 s RES, ADJ METAL 1k
110)  RV18     1-228-455-00 s RES, ADJ METAL 500
OLD)  RV19     1-228-456-00 s RES, ADJ METAL 1k
110)  RV19     1-228-455-00 s RES, ADJ METAL 500

OLD)  RV20     1-228-456-00 s RES, ADJ METAL 1k
110)  RV20     1-228-455-00 s RES, ADJ METAL 500
```

SE-144 BOARD

```
OLD)  C2       1-124-598-11 s ELECT 22uF 20% 25V
605)  C2       1-126-786-11 s ELECT 22uF 20% 25V
OLD)  C3       1-124-589-11 s ELECT 22uF 20% 25V
605)  C3       1-126-785-11 s ELECT 22uF 20% 25V
OLD)  C22      1-124-589-11 s ELECT 22uF 20% 25V
605)  C22      1-126-785-11 s ELECT 22uF 20% 25V

OLD)  C23      1-124-589-11 s ELECT 22uF 20% 25V
605)  C23      1-126-785-11 s ELECT 22uF 20% 25V
OLD)  C24      1-124-598-11 s ELECT 22uF 20% 25V
605)  C24      1-126-786-11 s ELECT 22uF 20% 25V
OLD)  C25      1-124-598-11 s ELECT 22uF 20% 25V
605)  C25      1-126-786-11 s ELECT 22uF 20% 25V

OLD)  C26      1-124-598-11 s ELECT 22uF 20% 25V
605)  C26      1-126-786-11 s ELECT 22uF 20% 25V
OLD)  C27      1-124-598-11 s ELECT 22uF 20% 25V
605)  C27      1-126-786-11 s ELECT 22uF 20% 25V
OLD)  C28      1-124-589-11 s ELECT 22uF 20% 25V
605)  C28      1-126-785-11 s ELECT 22uF 20% 25V
```

(SE-144 BOARD)

OLD)	C29	1-124-589-11	s	ELECT 22uF 20% 25V
605)	C29	1-126-785-11	s	ELECT 22uF 20% 25V
OLD)	IC2	8-759-100-94	s	IC UPC358G2
210)	IC2	8-759-983-69	s	IC LM358PS
OLD)	IC3	8-759-100-94	s	IC UPC358G2
210)	IC3	8-759-983-69	s	IC LM358PS
OLD)	IC10	8-759-100-95	s	IC UPC324G2
210)	IC10	8-759-983-74	s	IC LM324NS
OLD)	IC11	8-759-300-11	s	IC HD14053BFP
508)	IC11	8-759-009-07	s	IC MC14053BF
OLD)	IC12	8-759-300-11	s	IC HD14053BFP
508)	IC12	8-759-009-07	s	IC MC14053BF
OLD)	Q4	8-729-901-00	s	TRANSISTOR DTC124EK
509)	Q4	8-729-905-61	s	TRANSISTOR DTC124EUT106
OLD)	RB4	1-231-411-00	s	RESISTOR BLOCK 100kx8
202)	RB4	1-231-450-00	s	RESISTOR BLOCK 3.3kx8
OLD)	S1	1-553-856-00	s	SWITCH, TACTILE
210)	S1	DELETED.		
OLD)	S2	1-553-856-00	s	SWITCH, TACTILE
210)	S2	DELETED.		
OLD)	S3	1-553-856-00	s	SWITCH, TACTILE
210)	S3	DELETED.		

SV-120 BOARD

OLD)	1pc	A-6015-121-A	o	MOUNTED CIRCUIT BOARD, SV-120
210)	1pc	A-8271-760-A	o	MOUNTED CIRCUIT BOARD, SV-120

*The new board is upward compatible with the former one.
See section 22 for details.

OLD)	C1	1-126-176-11	s	ELECT 220uF 20% 10V
111)	C1	1-126-934-11	s	ELECT 220uF 20% 16V
OLD)	C2	1-126-176-11	s	ELECT 220uF 20% 10V
111)	C2	1-126-934-11	s	ELECT 220uF 20% 16V
OLD)	C4	1-126-176-11	s	ELECT 220uF 20% 10V
111)	C4	1-126-934-11	s	ELECT 220uF 20% 16V
OLD)	C6	1-126-176-11	s	ELECT 220uF 20% 10V
111)	C6	1-126-934-11	s	ELECT 220uF 20% 16V
OLD)	C7	1-124-478-11	s	ELECT 100uF 20% 25V
111)	C7	1-126-948-11	s	ELECT 100uF 20% 35V
OLD)	C8	1-124-478-11	s	ELECT 100uF 20% 25V
111)	C8	1-126-948-11	s	ELECT 100uF 20% 35V
OLD)	C10	1-124-478-11	s	ELECT 100uF 20% 25V
111)	C10	1-126-948-11	s	ELECT 100uF 20% 35V
OLD)	C11	1-124-478-11	s	ELECT 100uF 20% 25V
111)	C11	1-126-948-11	s	ELECT 100uF 20% 35V
OLD)	C15	1-162-801-11	s	CERAMIC 0.039uF 10% 50V
104)	C15	1-162-769-11	s	CERAMIC 0.0022uF 5% 50V
OLD)	C58	1-161-888-11	s	CERAMIC 0.01uF 50V
111)	C58	DELETED.		
OLD)	C84	NOT IN USE.		
111)	C84	1-124-916-11	s	ELECT 22uF 20% 63V
605)	C84	1-128-551-11	s	ELECT 22uF 20%50V

(SV-120 BOARD)

OLD)	C85	NOT IN USE.		
111)	C85	1-126-933-11	s	ELECT 100uF 20% 16V
OLD)	C86	NOT IN USE.		
111)	C86	1-161-896-11	s	CERAMIC 0.22uF 50V
OLD)	C87	NOT IN USE.		
111)	C87	1-162-726-11	s	CERAMIC 470pF 1% 50V
OLD)	C88	NOT IN USE.		
111)	C88	1-162-726-11	s	CERAMIC 470pF 1% 50V
OLD)	CN540M	1-568-576-11	o	HEADER, CONNECTOR PIN 68P
111)	CN540M	DELETED.		
OLD)	ICE18	8-759-910-43	s	IC CX23028
401)	ICE18	8-759-273-24	s	IC CX23028A
OLD)	ICG1	8-759-158-11	s	IC BQ4011YMA-100
508)	ICG1	8-749-011-87	s	IC M48Z30Y-100PM1
OLD)	ICG3	8-759-158-11	s	IC BQ4011YMA-100
508)	ICG3	8-749-011-87	s	IC M48Z30Y-100PM1
OLD)	ICG5	8-759-186-91	s	IC 27C1024-SV12001-0.220
412)	ICG5	8-759-343-20	s	IC 27C1024-SV12001-0.301
OLD)	ICL14	8-759-921-19	s	IC SN74HC161N
111)	ICL14	DELETED.		
OLD)	ICL14A	NOT IN USE.		
111)	ICL14A	8-759-921-19	s	IC SN74HC161N
OLD)	ICL14B	NOT IN USE.		
111)	ICL14B	8-759-916-14	s	IC SN74HC04N
OLD)	ICM5	8-759-164-96	s	IC TC55416P-25
503)	ICM5	8-759-299-49	s	IC CY7C164-25PC
OLD)	L1	1-421-329-00	s	COIL, CHOKE
111)	L1	1-460-086-11	s	COIL, CHOKE 10uH
OLD)	L2	1-421-329-00	s	COIL, CHOKE
111)	L2	1-460-086-11	s	COIL, CHOKE 10uH
OLD)	L3	1-421-329-00	s	COIL, CHOKE
111)	L3	1-460-086-11	s	COIL, CHOKE 10uH
OLD)	L4	1-421-329-00	s	COIL, CHOKE
111)	L4	1-460-086-11	s	COIL, CHOKE 10uH
OLD)	L5	1-421-329-00	s	COIL, CHOKE
111)	L5	1-460-086-11	s	COIL, CHOKE 10uH
OLD)	R89	1-249-437-11	s	CARBON 47k 5% 1/4W
111)	R89	DELETED.		
OLD)	R146	1-249-405-11	s	CARBON 100 5% 1/4W
111)	R146	DELETED.		
OLD)	R148	1-247-880-11	s	CARBON 110k 5% 1/4W
111)	R148	1-215-470-00	s	METAL 110k 1% 1/6W
OLD)	R174	1-249-393-11	s	CARBON 10 5% 1/4W
111)	R174	DELETED.		
OLD)	R175	1-249-393-11	s	CARBON 10 5% 1/4W
111)	R175	DELETED.		
OLD)	R188	NOT IN USE.		
111)	R188	1-249-429-11	s	CARBON 10k 5% 1/4W
OLD)	R189	NOT IN USE.		
111)	R189	1-249-429-11	s	CARBON 10k 5% 1/4W
OLD)	R190	NOT IN USE.		
111)	R190	1-249-429-11	s	CARBON 10k 5% 1/4W

(SV-120 BOARD)

OLD)	R191	NOT IN USE.
111)	R191	1-249-429-11 s CARBON 10k 5% 1/4W
OLD)	R192	NOT IN USE.
111)	R192	1-249-441-11 s CARBON 100k 5% 1/4W
OLD)	RB38	NOT IN USE.
111)	RB38	1-231-533-00 s RESISTOR BLOCK 10kx4
OLD)	S5	1-553-856-00 s SWITCH, TACTILE
111)	S5	DELETED.
OLD)	S6	1-553-856-00 s SWITCH, TACTILE
111)	S6	DELETED.
OLD)	S9	NOT IN USE.
111)	S9	1-570-727-11 s SWITCH, DIP

SW-448 BOARD

OLD)	1pc	NOT IN USE.
102)	1pc	8-759-510-82 s IC EPM5032DC-2
OLD)	C10	1-124-589-11 s ELECT 47uF 20% 16V
210)	C10	DELETED.
OLD)	C11	1-162-796-11 s CERAMIC 0.015uF 10% 50V
210)	C11	1-161-900-11 s CERAMIC 1uF 50V
OLD)	R21	1-215-460-00 s METAL 43k 1% 1/6W
210)	R21	DELETED.
OLD)	R25	1-215-421-00 s METAL 1k 1% 1/6W
210)	R25	DELETED.

TR-83 BOARD

OLD)	IC5	8-759-300-71 s IC HD14053BFP
605)	IC5	8-759-009-07 s IC MC14053BF
OLD)	IC6	8-759-300-71 s IC HD14053BFP
605)	IC6	8-759-009-07 s IC MC14053BF

VIO-15 BOARD

OLD)	1pc	A-6021-015-A o MOUNTED CIRCUIT BOARD, VIO-15
203)	1pc	A-6021-015-B o MOUNTED CIRCUIT BOARD, VIO-15

*The new board is upward compatible with the former one.
See section 22 for details.

OLD)	CN101	1-566-388-11 s CONNECTOR 8P, MALE
203)	CN101	DELETED.
OLD)	CN102	NOT IN USE.
110)	CN102	1-566-388-11 s CONNECTOR, 8P, MALE
203)	CN102	DELETED.
OLD)	CN925	1-580-356-11 s CONNECTOR, BNC
308)	CN925	1-764-274-11 s CONNECTOR, BNC FEMALE
OLD)	CN926	1-580-356-11 s CONNECTOR, BNC
308)	CN926	1-764-274-11 s CONNECTOR, BNC FEMALE

(VIO-15 BOARD)

OLD)	CN927	1-580-356-11 s CONNECTOR, BNC
308)	CN927	1-764-274-11 s CONNECTOR, BNC FEMALE
OLD)	CN928	1-580-356-11 s CONNECTOR, BNC
308)	CN928	1-764-274-11 s CONNECTOR, BNC FEMALE
OLD)	CN929	1-580-356-11 s CONNECTOR, BNC
308)	CN929	1-764-274-11 s CONNECTOR, BNC FEMALE
OLD)	CN930	1-580-356-11 s CONNECTOR, BNC
308)	CN930	1-764-274-11 s CONNECTOR, BNC FEMALE
OLD)	CN931	1-580-356-11 s CONNECTOR, BNC
308)	CN931	1-764-274-11 s CONNECTOR, BNC FEMALE
OLD)	CN961	1-580-356-11 s CONNECTOR, BNC
308)	CN961	1-764-274-11 s CONNECTOR, BNC FEMALE
OLD)	D2	8-719-912-20 s DIODE 1SS120
110)	D2	DELETED.
OLD)	IC9	8-741-602-03 s IC SBX1602A
210)	IC9	8-741-602-11 s IC SBX1602A
OLD)	JP1	NOT IN USE.
203)	JP1	1-566-388-11 s CONNECTOR 8P, MALE
OLD)	JP2	NOT IN USE.
203)	JP2	1-566-388-11 s CONNECTOR 8P, MALE
OLD)	JS1	NOT IN USE.
110)	JS1	1-563-859-11 s PLUG, SHORTING
OLD)	Q2	NOT IN USE.
110)	Q2	8-729-100-66 s TRANSISTOR 2SC1623
OLD)	R187	NOT IN USE.
203)	R187	1-216-603-11 s METAL, CHIP 10 0.5% 1/10W
OLD)	R188	NOT IN USE.
203)	R188	1-216-603-11 s METAL, CHIP 10 0.5% 1/10W
OLD)	R189	NOT IN USE.
203)	R189	1-216-603-11 s METAL, CHIP 10 0.5% 1/10W
OLD)	R190	NOT IN USE.
203)	R190	1-216-603-11 s METAL, CHIP 10 0.5% 1/10W
OLD)	R191	NOT IN USE.
203)	R191	1-216-603-11 s METAL, CHIP 10 0.5% 1/10W
OLD)	R192	NOT IN USE.
203)	R192	1-216-603-11 s METAL, CHIP 10 0.5% 1/10W
OLD)	R193	NOT IN USE.
203)	R193	1-216-603-11 s METAL, CHIP 10 0.5% 1/10W
OLD)	R194	NOT IN USE.
203)	R194	1-216-603-11 s METAL, CHIP 10 0.5% 1/10W
OLD)	R195	NOT IN USE.
203)	R195	1-216-603-11 s METAL, CHIP 10 0.5% 1/10W
OLD)	R196	NOT IN USE.
203)	R196	1-216-603-11 s METAL, CHIP 10 0.5% 1/10W
OLD)	R197	NOT IN USE.
203)	R197	1-216-603-11 s METAL, CHIP 10 0.5% 1/10W
OLD)	R198	NOT IN USE.
203)	R198	1-216-603-11 s METAL, CHIP 10 0.5% 1/10W
OLD)	R199	NOT IN USE.
203)	R199	1-216-603-11 s METAL, CHIP 10 0.5% 1/10W
OLD)	R200	NOT IN USE.
203)	R200	1-216-603-11 s METAL, CHIP 10 0.5% 1/10W
OLD)	R201	NOT IN USE.
203)	R201	1-216-603-11 s METAL, CHIP 10 0.5% 1/10W

(VIO-15 BOARD)

```
OLD)  R202    NOT IN USE.
203)  R202    1-216-603-11 s METAL, CHIP 10 0.5% 1/10W
OLD)  R203    NOT IN USE.
203)  R203    1-216-603-11 s METAL, CHIP 10 0.5% 1/10W
OLD)  R204    NOT IN USE.
203)  R204    1-216-603-11 s METAL, CHIP 10 0.5% 1/10W

OLD)  R205    NOT IN USE.
203)  R205    1-216-603-11 s METAL, CHIP 10 0.5% 1/10W
OLD)  R206    NOT IN USE.
203)  R206    1-216-603-11 s METAL, CHIP 10 0.5% 1/10W
OLD)  R207    NOT IN USE.
203)  R207    1-216-603-11 s METAL, CHIP 10 0.5% 1/10W

OLD)  R208    NOT IN USE.
203)  R208    1-216-603-11 s METAL, CHIP 10 0.5% 1/10W
OLD)  R209    NOT IN USE.
203)  R209    1-216-603-11 s METAL, CHIP 10 0.5% 1/10W
OLD)  R210    NOT IN USE.
203)  R210    1-216-603-11 s METAL, CHIP 10 0.5% 1/10W

OLD)  R211    NOT IN USE.
203)  R211    1-216-603-11 s METAL, CHIP 10 0.5% 1/10W
OLD)  R212    NOT IN USE.
203)  R212    1-216-603-11 s METAL, CHIP 10 0.5% 1/10W
OLD)  R213    NOT IN USE.
203)  R213    1-216-603-11 s METAL, CHIP 10 0.5% 1/10W

OLD)  R214    NOT IN USE.
203)  R214    1-216-603-11 s METAL, CHIP 10 0.5% 1/10W
OLD)  R215    NOT IN USE.
203)  R215    1-216-603-11 s METAL, CHIP 10 0.5% 1/10W
OLD)  R216    NOT IN USE.
203)  R216    1-216-603-11 s METAL, CHIP 10 0.5% 1/10W

OLD)  R217    NOT IN USE.
203)  R217    1-216-603-11 s METAL, CHIP 10 0.5% 1/10W
OLD)  R218    NOT IN USE.
203)  R218    1-216-603-11 s METAL, CHIP 10 0.5% 1/10W
OLD)  R219    NOT IN USE.
203)  R219    1-216-603-11 s METAL, CHIP 10 0.5% 1/10W

OLD)  R220    NOT IN USE.
203)  R220    1-216-603-11 s METAL, CHIP 10 0.5% 1/10W
OLD)  R221    NOT IN USE.
203)  R221    1-216-603-11 s METAL, CHIP 10 0.5% 1/10W
OLD)  R222    NOT IN USE.
203)  R222    1-216-603-11 s METAL, CHIP 10 0.5% 1/10W
OLD)  R223    NOT IN USE.
203)  R223    1-216-603-11 s METAL, CHIP 10 0.5% 1/10W

OLD)  R224    NOT IN USE.
203)  R224    1-216-603-11 s METAL, CHIP 10 0.5% 1/10W
OLD)  R225    NOT IN USE.
203)  R225    1-216-603-11 s METAL, CHIP 10 0.5% 1/10W
OLD)  R226    NOT IN USE.
203)  R226    1-216-603-11 s METAL, CHIP 10 0.5% 1/10W

OLD)  R227    NOT IN USE.
203)  R227    1-216-603-11 s METAL, CHIP 10 0.5% 1/10W
OLD)  R228    NOT IN USE.
203)  R228    1-216-603-11 s METAL, CHIP 10 0.5% 1/10W
OLD)  R229    NOT IN USE.
203)  R229    1-216-603-11 s METAL, CHIP 10 0.5% 1/10W
OLD)  R230    NOT IN USE.
203)  R230    1-216-603-11 s METAL, CHIP 10 0.5% 1/10W
```

VIO-16 BOARD

```
OLD)  9pcs    NOT IN USE.
202):DVR-2000, 204):DVR-2100
202)  9pcs    7-623-954-01 s WASHER 3.0, FIBER
204)  9pcs    7-623-954-01 s WASHER 3.0, FIBER

OLD)  C1      1-163-241-11 s CERAMIC, CHIP 39pF 5% 50V
110)  C1      1-163-243-11 s CERAMIC, CHIP 47pF 5% 50V

OLD)  CN915   1-580-356-11 s CONNECTOR, BNC
308)  CN915   1-764-274-11 s CONNECTOR, BNC FEMALE
OLD)  CN916   1-580-356-11 s CONNECTOR, BNC
308)  CN916   1-764-274-11 s CONNECTOR, BNC FEMALE
OLD)  CN917   1-580-356-11 s CONNECTOR, BNC
308)  CN917   1-764-274-11 s CONNECTOR, BNC FEMALE

OLD)  CN918   1-580-357-11 s CONNECTOR, BNC
308)  CN918   1-764-275-11 s CONNECTOR, BNC FEMALE
OLD)  CN919   1-580-357-11 s CONNECTOR, BNC
308)  CN919   1-764-275-11 s CONNECTOR, BNC FEMALE
OLD)  CN920   1-580-356-11 s CONNECTOR, BNC
308)  CN920   1-764-274-11 s CONNECTOR, BNC FEMALE

OLD)  CN921   1-580-356-11 s CONNECTOR, BNC
308)  CN921   1-764-274-11 s CONNECTOR, BNC FEMALE
OLD)  CN922   1-580-356-11 s CONNECTOR, BNC
308)  CN922   1-764-274-11 s CONNECTOR, BNC FEMALE
OLD)  CN964   1-580-356-11 s CONNECTOR, BNC
308)  CN964   1-764-274-11 s CONNECTOR, BNC FEMALE

OLD)  D1      8-719-912-20 s DIODE 1SS120
110)  D1      DELETED.

OLD)  IC1     8-741-602-03 s IC SBX1602A
206)  IC1     8-741-602-11 s IC SBX1602A
OLD)  IC5     8-759-150-98 s IC CXD8069G
211)  IC5     8-759-164-99 s IC CXD8069BG

OLD)  Q1      NOT IN USE.
110)  Q1      8-729-100-66 s TRANSISTOR 2SC1623

OLD)  R18     NOT IN USE.
110)  R18     1-216-699-11 s METAL, CHIP 100k 0.5% 1/10W
OLD)  R42     NOT IN USE.
110)  R42     1-216-025-00 s METAL, CHIP 100 5% 1/10W
OLD)  R43     NOT IN USE.
110)  R43     1-216-092-00 s METAL 62k 5% 1/10W
```

VN-03 BOARD

```
OLD)  1pc     A-6019-044-B o MOUNTED CIRCUIT BOARD, VN-03
106)  1pc     A-6019-044-C o MOUNTED CIRCUIT BOARD, VN-03
```

*The new board is upward compatible with the former one.
See section 22 for details.

```
OLD)  7pcs    1-526-816-21 o SOCKET, IC (DP) 24P
204)  7pcs    DELETED.
OLD)  8pcs    1-526-656-00 o SOCKET, IC (DP) 20P
204)  8pcs    DELETED.
```

(VN-03 BOARD)

OLD)	C5	1-124-522-11 s ELECT, 270uF 20% 16V
204)	C5	DELETED.
OLD)	C6	1-124-522-11 s ELECT, 270uF 20% 16V
204)	C6	DELETED.
OLD)	C7	1-124-522-11 s ELECT, 270uF 20% 16V
204)	C7	DELETED.
OLD)	C8	1-124-522-11 s ELECT, 270uF 20% 16V
204)	C8	DELETED.
OLD)	C16	1-163-038-00 s CERAMIC, CHIP 0.1uF 25V
204)	C16	DELETED.
OLD)	C17	1-163-038-00 s CERAMIC, CHIP 0.1uF 25V
204)	C17	DELETED.
OLD)	C20	1-163-038-00 s CERAMIC, CHIP 0.1uF 25V
204)	C20	DELETED.
OLD)	C21	1-163-038-00 s CERAMIC, CHIP 0.1uF 25V
204)	C21	DELETED.
OLD)	C28	1-163-038-00 s CERAMIC, CHIP 0.1uF 25V
204)	C28	DELETED.
OLD)	C42	1-163-038-00 s CERAMIC, CHIP 0.1uF 25V
204)	C42	DELETED.
OLD)	C44	1-163-038-00 s CERAMIC, CHIP 0.1uF 25V
204)	C44	DELETED.
OLD)	C46	1-163-038-00 s CERAMIC, CHIP 0.1uF 25V
204)	C46	DELETED.
OLD)	C48	1-163-038-00 s CERAMIC, CHIP 0.1uF 25V
204)	C48	DELETED.
OLD)	C53	1-163-038-00 s CERAMIC, CHIP 0.1uF 25V
204)	C53	DELETED.
OLD)	C55	1-163-038-00 s CERAMIC, CHIP 0.1uF 25V
204)	C55	DELETED.
OLD)	C57	1-163-038-00 s CERAMIC, CHIP 0.1uF 25V
204)	C57	DELETED.
OLD)	C59	1-163-038-00 s CERAMIC, CHIP 0.1uF 25V
204)	C59	DELETED.
OLD)	C66	1-163-038-00 s CERAMIC, CHIP 0.1uF 25V
204)	C66	DELETED.
OLD)	C68	1-163-038-00 s CERAMIC, CHIP 0.1uF 25V
204)	C68	DELETED.
OLD)	C70	1-163-038-00 s CERAMIC, CHIP 0.1uF 25V
204)	C70	DELETED.
OLD)	C72	1-163-038-00 s CERAMIC, CHIP 0.1uF 25V
204)	C72	DELETED.
OLD)	C75	1-163-038-00 s CERAMIC, CHIP 0.1uF 25V
204)	C75	DELETED.
OLD)	C77	1-163-038-00 s CERAMIC, CHIP 0.1uF 25V
204)	C77	DELETED.
OLD)	C81	1-163-038-00 s CERAMIC, CHIP 0.1uF 25V
204)	C81	DELETED.
OLD)	C84	1-163-038-00 s CERAMIC, CHIP 0.1uF 25V
204)	C84	DELETED.
OLD)	C86	1-163-038-00 s CERAMIC, CHIP 0.1uF 25V
204)	C86	DELETED.
OLD)	C88	1-163-038-00 s CERAMIC, CHIP 0.1uF 25V
204)	C88	DELETED.

(VN-03 BOARD)

OLD)	C89	1-163-038-00 s CERAMIC, CHIP 0.1uF 25V
204)	C89	DELETED.
OLD)	C91	1-163-038-00 s CERAMIC, CHIP 0.1uF 25V
204)	C91	DELETED.
OLD)	C93	1-163-038-00 s CERAMIC, CHIP 0.1uF 25V
204)	C93	DELETED.
OLD)	C96	1-163-038-00 s CERAMIC, CHIP 0.1uF 25V
204)	C96	DELETED.
OLD)	C98	1-163-038-00 s CERAMIC, CHIP 0.1uF 25V
204)	C98	DELETED.
OLD)	C104	1-163-038-00 s CERAMIC, CHIP 0.1uF 25V
204)	C104	DELETED.
OLD)	C107	1-163-038-00 s CERAMIC, CHIP 0.1uF 25V
204)	C107	DELETED.
OLD)	C112	1-163-038-00 s CERAMIC, CHIP 0.1uF 25V
204)	C112	DELETED.
OLD)	C113	1-163-038-00 s CERAMIC, CHIP 0.1uF 25V
204)	C113	DELETED.
OLD)	C114	1-163-038-00 s CERAMIC, CHIP 0.1uF 25V
204)	C114	DELETED.
OLD)	C116	1-163-038-00 s CERAMIC, CHIP 0.1uF 25V
204)	C116	DELETED.
OLD)	C118	1-163-038-00 s CERAMIC, CHIP 0.1uF 25V
204)	C118	DELETED.
OLD)	C120	1-163-038-00 s CERAMIC, CHIP 0.1uF 25V
204)	C120	DELETED.
OLD)	C122	1-163-038-00 s CERAMIC, CHIP 0.1uF 25V
204)	C122	DELETED.
OLD)	C124	1-163-038-00 s CERAMIC, CHIP 0.1uF 25V
204)	C124	DELETED.
OLD)	C126	1-163-038-00 s CERAMIC, CHIP 0.1uF 25V
204)	C126	DELETED.
OLD)	C130	1-163-038-00 s CERAMIC, CHIP 0.1uF 25V
204)	C130	DELETED.
OLD)	C135	1-163-038-00 s CERAMIC, CHIP 0.1uF 25V
204)	C135	DELETED.
OLD)	C143	1-163-038-00 s CERAMIC, CHIP 0.1uF 25V
204)	C143	DELETED.
OLD)	C144	1-163-038-00 s CERAMIC, CHIP 0.1uF 25V
204)	C144	DELETED.
OLD)	C146	1-163-038-00 s CERAMIC, CHIP 0.1uF 25V
204)	C146	DELETED.
OLD)	C148	1-163-038-00 s CERAMIC, CHIP 0.1uF 25V
204)	C148	DELETED.
OLD)	C153	1-163-038-00 s CERAMIC, CHIP 0.1uF 25V
204)	C153	DELETED.
OLD)	C159	1-163-038-00 s CERAMIC, CHIP 0.1uF 25V
204)	C159	DELETED.
OLD)	C162	1-163-038-00 s CERAMIC, CHIP 0.1uF 25V
204)	C162	DELETED.
OLD)	C165	1-163-038-00 s CERAMIC, CHIP 0.1uF 25V
204)	C165	DELETED.
OLD)	C169	1-163-038-00 s CERAMIC, CHIP 0.1uF 25V
204)	C169	DELETED.

OLD)	C171	1-163-038-00 s CERAMIC, CHIP 0.1uF 25V
204)	C171	DELETED.
OLD)	C172	1-163-038-00 s CERAMIC, CHIP 0.1uF 25V
204)	C172	DELETED.
OLD)	C178	1-163-038-00 s CERAMIC, CHIP 0.1uF 25V
204)	C178	DELETED.
OLD)	C181	1-163-038-00 s CERAMIC, CHIP 0.1uF 25V
204)	C181	DELETED.
OLD)	C183	1-163-038-00 s CERAMIC, CHIP 0.1uF 25V
204)	C183	DELETED.
OLD)	C188	1-163-038-00 s CERAMIC, CHIP 0.1uF 25V
204)	C188	DELETED.
OLD)	C190	1-163-038-00 s CERAMIC, CHIP 0.1uF 25V
204)	C190	DELETED.
OLD)	C193	1-163-038-00 s CERAMIC, CHIP 0.1uF 25V
204)	C193	DELETED.
OLD)	C194	1-163-038-00 s CERAMIC, CHIP 0.1uF 25V
204)	C194	DELETED.
OLD)	C197	1-163-038-00 s CERAMIC, CHIP 0.1uF 25V
204)	C197	DELETED.
OLD)	C198	1-163-038-00 s CERAMIC, CHIP 0.1uF 25V
204)	C198	DELETED.
OLD)	C200	1-163-038-00 s CERAMIC, CHIP 0.1uF 25V
204)	C200	DELETED.
OLD)	C201	1-163-038-00 s CERAMIC, CHIP 0.1uF 25V
204)	C201	DELETED.
OLD)	C203	1-163-038-00 s CERAMIC, CHIP 0.1uF 25V
204)	C203	DELETED.
OLD)	C204	1-163-038-00 s CERAMIC, CHIP 0.1uF 25V
204)	C204	DELETED.
OLD)	C205	1-163-038-00 s CERAMIC, CHIP 0.1uF 25V
204)	C205	DELETED.
OLD)	C207	1-163-038-00 s CERAMIC, CHIP 0.1uF 25V
204)	C207	DELETED.
OLD)	C208	1-163-038-00 s CERAMIC, CHIP 0.1uF 25V
204)	C208	DELETED.
OLD)	C209	1-163-038-00 s CERAMIC, CHIP 0.1uF 25V
204)	C209	DELETED.
OLD)	C214	1-163-038-00 s CERAMIC, CHIP 0.1uF 25V
204)	C214	DELETED.
OLD)	C218	1-163-038-00 s CERAMIC, CHIP 0.1uF 25V
204)	C218	DELETED.
OLD)	C220	1-163-038-00 s CERAMIC, CHIP 0.1uF 25V
204)	C220	DELETED.
OLD)	C222	1-163-038-00 s CERAMIC, CHIP 0.1uF 25V
204)	C222	DELETED.
OLD)	C227	1-163-038-00 s CERAMIC, CHIP 0.1uF 25V
204)	C227	DELETED.
OLD)	C229	1-163-038-00 s CERAMIC, CHIP 0.1uF 25V
204)	C229	DELETED.
OLD)	C232	1-163-038-00 s CERAMIC, CHIP 0.1uF 25V
204)	C232	DELETED.
OLD)	C234	1-163-038-00 s CERAMIC, CHIP 0.1uF 25V
204)	C234	DELETED.

(VN-03 BOARD)

OLD)	C236	1-163-038-00 s CERAMIC, CHIP 0.1uF 25V
204)	C236	DELETED.
OLD)	C241	1-163-038-00 s CERAMIC, CHIP 0.1uF 25V
204)	C241	DELETED.
OLD)	C245	1-163-038-00 s CERAMIC, CHIP 0.1uF 25V
204)	C245	DELETED.
OLD)	C247	1-163-038-00 s CERAMIC, CHIP 0.1uF 25V
204)	C247	DELETED.
OLD)	C256	1-163-038-00 s CERAMIC, CHIP 0.1uF 25V
204)	C256	DELETED.
OLD)	C260	1-163-038-00 s CERAMIC, CHIP 0.1uF 25V
204)	C260	DELETED.
OLD)	C263	1-163-038-00 s CERAMIC, CHIP 0.1uF 25V
204)	C263	DELETED.
OLD)	CN1	1-563-323-11 s CONNECTOR, D-SUB 9P, FEMALE
204)	CN1	DELETED.
OLD)	ICA14	8-759-951-88 s IC SN75188N
204)	ICA14	DELETED.
OLD)	ICD19	8-759-993-54 s IC 74F541SJ
106)	ICD19	8-759-948-58 s IC 74F244SJ
OLD)	ICF6	8-759-926-77 s IC SN74HC541NS
204)	ICF6	DELETED.
OLD)	ICF7	8-759-993-54 s IC 74F541SJ
106)	ICF7	8-759-948-58 s IC 74F244SJ
OLD)	ICF8	8-759-926-77 s IC SN74HC541NS
204)	ICF8	DELETED.
OLD)	ICG7	8-759-926-77 s IC SN74HC541NS
204)	ICG7	DELETED.
OLD)	ICG9	8-759-926-77 s IC SN74HC541NS
204)	ICG9	DELETED.
OLD)	ICH2	8-759-078-62 s IC 27C512F-VN0310-0110, EPROM
210)	ICH2	8-759-157-45 o IC 27C512-VN0310-0206, EPROM
OLD)	ICH4	8-759-507-80 s IC MS62256CLL-10NC
308)	ICH4	8-752-337-62 s IC CXK58257ASP-10L
OLD)	ICH7	8-759-147-02 s IC UPD42101C-3
204)	ICH7	DELETED.
OLD)	ICH9	8-759-147-02 s IC UPD42101C-3
204)	ICH9	DELETED.
OLD)	ICJ10	8-759-993-54 s IC 74F541SJ
106)	ICJ10	8-759-948-58 s IC 74F244SJ
OLD)	ICJ12	8-759-993-54 s IC 74F541SJ
106)	ICJ12	8-759-948-58 s IC 74F244SJ
OLD)	ICJ13	NOT IN USE.
306)	ICJ13	8-759-173-72 o IC 5032PC-VN0313-2, PLD
OLD)	ICJ14	8-759-507-80 s IC MS62256CLL-10NC
308)	ICJ14	8-752-337-62 s IC CXK58257ASP-10L
OLD)	ICJ15	8-759-078-63 s IC 27C512F-VN0311-0109, EPROM
210)	ICJ15	8-759-157-45 o IC 27C512-VN0311-0203, EPROM
OLD)	ICJ5A	8-759-993-54 s IC 74F541SJ
106)	ICJ5A	8-759-948-58 s IC 74F244SJ

(VN-03 BOARD)

OLD)	ICL10	8-759-993-54	s	IC 74F541SJ
106)	ICL10	8-759-948-58	s	IC 74F244SJ
OLD)	ICP5	8-759-507-80	s	IC MS62256CLL-10NC
308)	ICP5	8-752-337-62	s	IC CXK58257ASP-10L
OLD)	ICP8	8-759-076-29	o	IC 27C512-VN0312-0105, EPROM
306)	ICP8	8-759-195-24	o	IC 27C512-VN0312-0201, EPROM
OLD)	L4	1-460-085-11	s	COIL, CHOKE 6.8uH
204)	L4	DELETED.		
OLD)	L5	1-460-085-11	s	COIL, CHOKE 6.8uH
204)	L5	DELETED.		

DVR-2000 (J, UC, EK)
DVR-2100 (J, UC, EK) E
3-170-611-16 Volume-2

Sony Corporation
Image & Sound Communication Company

Printed in Japan
1997. 1 09
© 1991
Published by
Engineering Services Dept.